Form No. 3377-386 Rev F

TORO®

Count on it.

Parts Catalog

Greensmaster® 3150 2-Wheel Drive Traction Unit

Model No. 04358—Serial No. 313000001 and Up

Register at www.Toro.com.
Original Instructions (EN)

CE

3377-386 F

Ordering Replacement Parts

To order replacement parts, please supply the part number, the quantity, and the description of each part desired.

Understanding Reference Numbers

Each identified part in an illustration has a reference number. The reference number for a part also appears in the parts list, along with other information about the part.

This catalog uses two special reference number formats, one to indicate parts in a service assembly and another to indicate the quantity of a given part in an illustration.

Service Assembly Reference Numbers

Parts in service assemblies have reference numbers in the form a:b. The a represents the reference number of the entire service assembly and the b represents a sequential number unique to each part within the service assembly.

For example, a wheel assembly might be identified by reference number 6, the tire by 6:1, the valve by 6:2, and the wheel by 6:3. When you order the assembly identified by reference number 6, you receive all parts identified by reference numbers 6:1,6:2, and 6:3. However, you may also order any part individually. Reference numbers of this type appear in illustration and in parts lists.

Reference Numbers Indicating Quantity

In an illustration, if a reference number indicates more than one part, the reference number has the form nX y. The n represents the quantity of the part, the X is the multiplication symbol, and the y represents the reference number.

For example, in an illustration, the reference number 2X 37 means that two of the parts identified by reference number 37 are indicated.

Contents

Brake Pedal Assembly 4
Traction Pedal Assembly 5
Front Wheel and Brake Assembly 6
Brake Assembly No. 104-7705 8
Hydraulic Motor Assembly (CCW) No. 110-4015 9
Hydraulic Motor Assembly (CW) No. 110-4016 10
Steering Arm Assembly 11
Steering Valve Assembly No. 114-4672 12
Right Hand Pull Frame Assembly 13
Hydraulic Cylinder Assembly No. 106-9066 15
Left Hand Pull Frame Assembly 16
Center Pull Frame Assembly 18
Hydraulic Cylinder Assembly No. 106-9064 20
Seat Assembly 21
Neutral System Assembly 23
Engine Installation Assembly 24
Hydrostat and Gear Pump Drive Assembly 26
Hydraulic Pump Assembly No. 121-9557 27
Hydraulic Gear Pump Assembly No. 114-9956 29
Frame and Battery Assembly 30
Rear Wheel Assembly 31
Hydraulic Cylinder Assembly No. 112-0297 33
Control Panel Assembly 34
Hydraulic Reservoir and Leak Detector Assembly 35
Fuel Tank Assembly 37
Speed Selector Lever Assembly 38
Joystick and Console Assembly 39
Joystick Bracket Assembly No. 120-5280 40
Grass Basket and Roll-Over Protection System Assembly 41
Hydraulic Manifold Assembly 42
Hydraulic Manifold Assembly No. 112-0289 43
Hydraulic Traction Assembly 45
Hydraulic Reel Drive Assembly 46
Hydraulic Motor Assembly No. 112-9200 48
Hydraulic Lift Assembly 49
Hydraulic Steering Assembly 50
Wire Harness Routing Assembly 51
Carbon Canister Hose Routing Assembly 52
Attachments and Accessories 53

© 2021—The Toro® Company
8111 Lyndale Avenue South
Bloomington, MN 55420

Contact us at www.Toro.com.
Printed in the USA.
All Rights Reserved

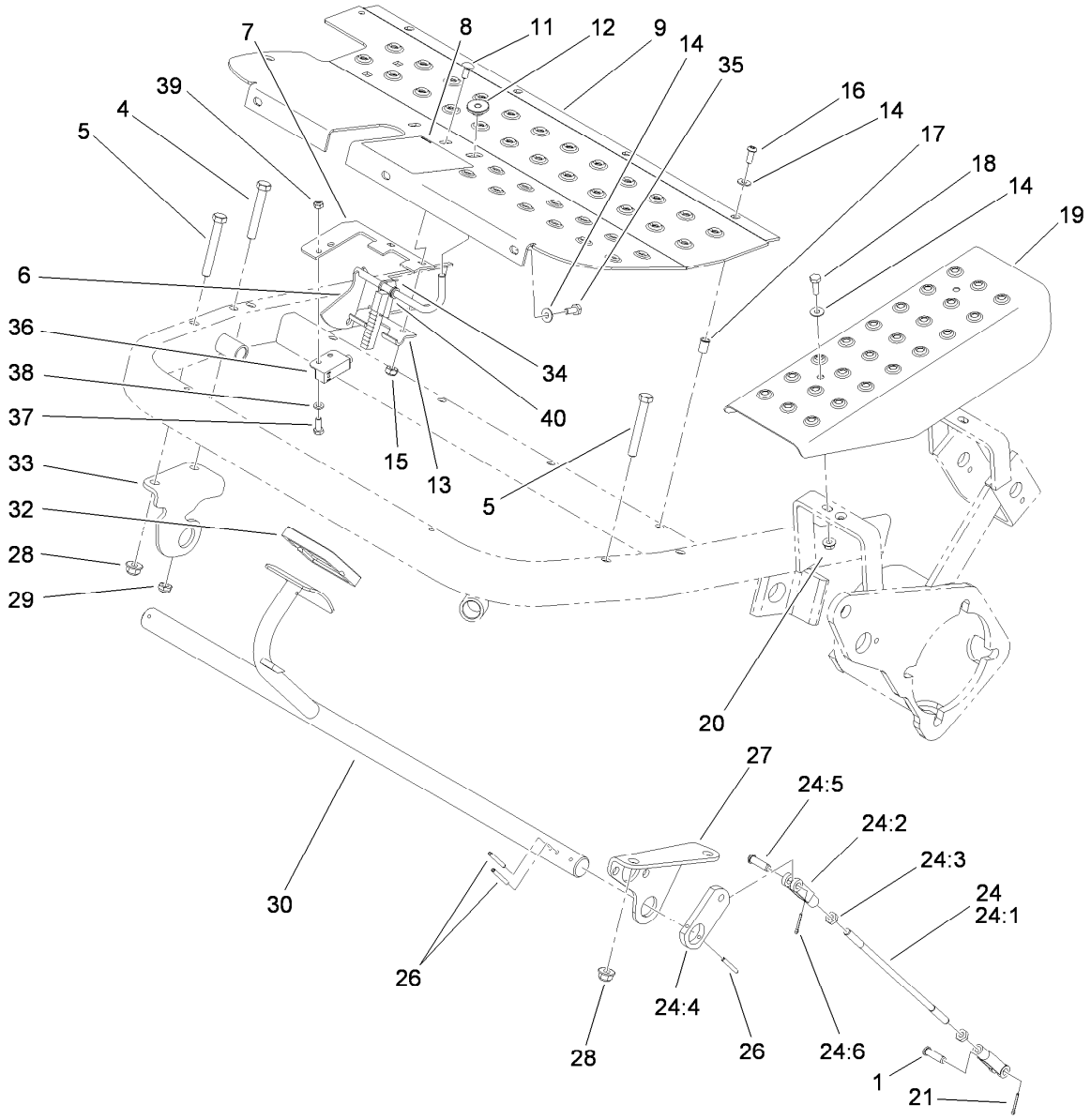

Brake Pedal Assembly

Ref.	Part Number	Qty.	Description
1	283-61	2	Pin-Yoke
4	323-12	1	Screw-HH
5	323-13	3	Screw-HH
6	100-9819	1	Latch ASM
7	100-9821	1	Plate-Switch, Reed
8	93-8062	1	Decal-Brake, Parking
9	105-0463-01	1	Plate-Footrest
11	3229-11	2	Screw-CARR
12	32141-111	1	Nut-Adjusting
13	95-1629	1	Hinge-Lower
14	3256-1	4	Washer-Flat
15	3296-16	2	Nut-Lock, NI
16	3274-31	4	Screw-HSBH
17	32148-6	7	Nut-Clinch
18	115-5103	2	Screw-HHF
19	83-0200-01	1	Plate-Cover, LH
20	32128-33	2	Nut-HF
21	3272-6	2	Pin-Cotter
24	115-6676	2	Brake Rod ASM
24:1	27-2270	1	Rod-Adjustment, Brake

Ref.	Part Number	Qty.	Description
24:2	1-303105	2	Yoke-Adjustable
24:3	3220-2	2	Nut-Jam
24:4	112-9180	1	Strap-Shaft, Brake
24:5	283-61	1	Pin-Yoke
24:6	3272-6	1	Pin-Cotter
26	32121-35	4	Pin-Roll
27	88-9640-01	1	Bracket-Lift Pivot, LH
28	104-8301	3	Nut-HF, NI
29	3296-59	1	Nut-Lock, NI
30	83-0160	1	Shaft-Brake
32	93-7629	1	Pad-Foot, Brake
33	105-0440-01	1	Bracket-Brake, RH
34	10-8140	1	Spring-Latch, Brake
35	99-6810	3	Screw-HHF
36	104-2057	1	Sensor
37	33113-016	2	Screw-HH
38	33093-00	2	Washer-Flat
39	33023-00	2	Nut-Lock
40	75-5470	2	Spacer-Bearing

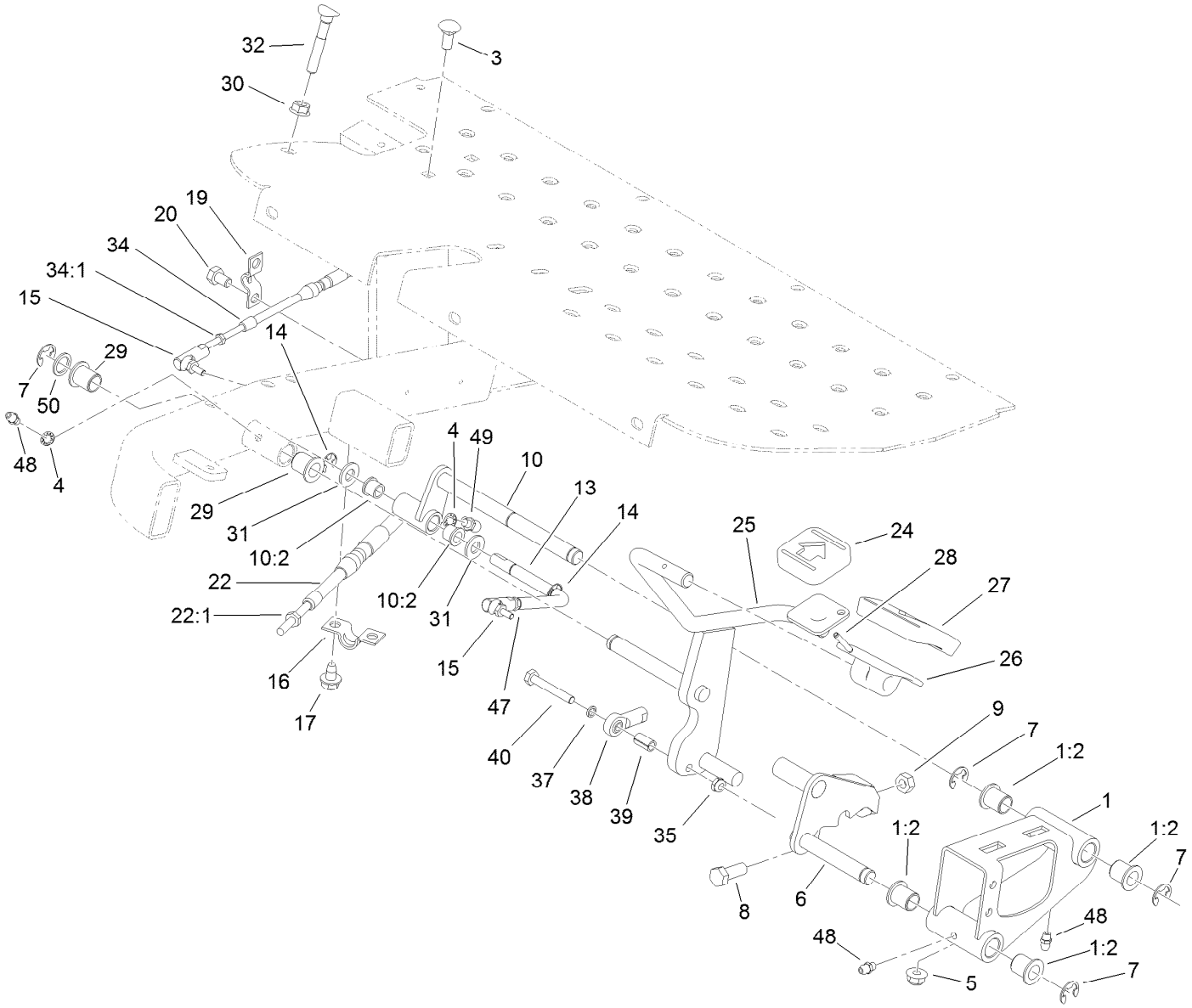

Traction Pedal Assembly

Ref.	Part Number	Qty.	Description
1	106-4620	1	Pivot Mount ASM
1:2	256-155	4	Bushing-Flange
3	3230-1	2	Bolt-CARR
4	3254-8	2	Washer-Lock
5	104-8300	2	Nut-HF, NI
6	115-3256	1	Lock ASM
7	32120-47	4	Ring-Retaining, External
8	323-6	1	Screw-HH
9	3217-7	1	Nut-Hex
10	106-4621	1	Support ASM
10:2	256-116	2	Bushing-Flange
13	105-5430	1	Rod-Connecting
14	32120-18	2	E-Ring
15	2411-38	2	Joint-Ball
16	93-2092	1	Clamp-Cable
17	9266934	2	Screw
19	93-2279	1	Clamp-Cable
20	322-1	2	Screw-HH
22	105-5445	1	Cable-Traction
22:1	3220-1	2	Nut-Jam

Ref.	Part Number	Qty.	Description
24	74-9110	1	Pad-Pedal, Reverse
25	105-5421-01	1	Pedal-Traction
26	117-9507	1	Pedal-Accelerator
27	74-9100	1	Pad-Pedal, Forward
28	32121-45	1	Pin-Spring
29	256-155	2	Bushing-Flange
30	32128-20	1	Nut-HF
31	3256-24	2	Washer-Flat
32	17-9426	1	Screw-Handle
34	105-5444	1	Cable-Lock, Neutral
34:1	3219-14	2	Nut-Hex
35	3296-56	1	Nut-Lock, NI
37	105-8318	1	Washer-Flat
38	2411-41	1	Rod End-Ball Joint
39	80-0650	1	Spacer-Tubular
40	321-10	1	Screw-HH
47	3219-14	1	Nut-Hex
48	302-5	3	Fitting-Grease
49	302-60	1	Fitting-Grease
50	3256-76	1	Washer-Flat

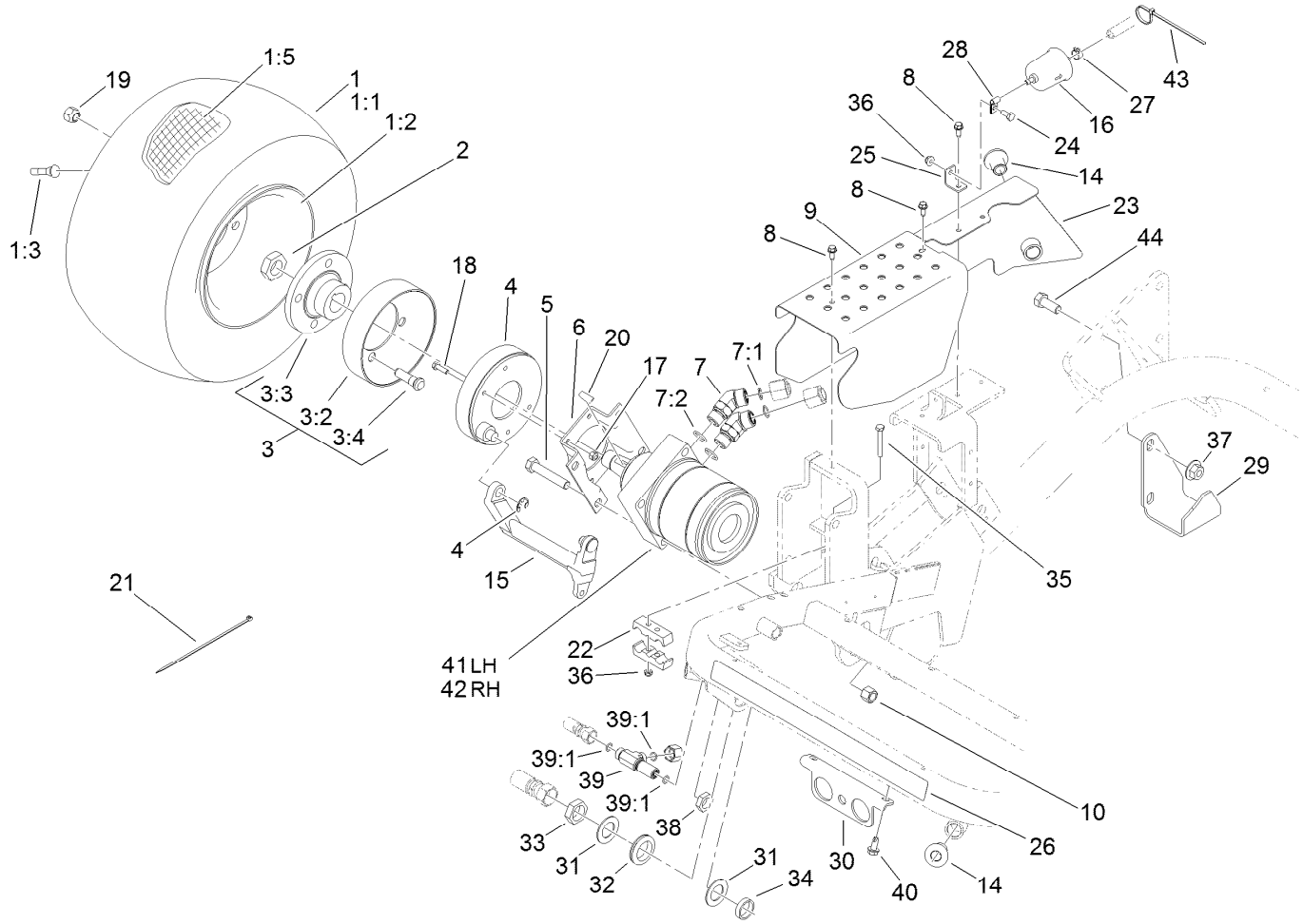

Front Wheel and Brake Assembly

Ref.	Part Number	Qty.	Description
1		2	Wheel And Tire ASM ●
1:1	28-3680	1	Tire
1:2	217-60	1	Rim
1:3	232-27	1	Stem-Valve
1:5	232-37	1	Tube
2	26-3790	2	Nut-Lock
3	10-6821	2	Brake Drum ASM
3:2	10-6850	1	Drum-Brake
3:3	10-6870-03	1	Hub-Wheel
3:4	85-6540	4	Stud-Drive
4	104-7705	2	Brake ASM
5	325-11	8	Screw-HH
6	84-2000-03	2	Bracket-Brake
7	340-14	4	Fitting-HYD, 45 DEG
7:1	237-65	1	O-Ring
7:2	237-80	1	O-Ring
8	32144-10	4	Screw-HWH
9	105-0433-01	1	Channel-Step, RH

Ref.	Part Number	Qty.	Description
10	3296-23	8	Nut-Lock, NI
14	83-1700	3	Bushing-Flange
15	93-2096	2	Lever-Brake
16	121-2583	1	Filter-Fuel, Inline
17	3296-42	8	Nut-Lock, NI
18	321-5	8	Screw-HH
19	242-50	8	Nut-Lug
20	3257-42	2	Key-Woodruff
21	3290-378	3	Tie-Cable
22	93-2509	2	Clamp-Tube
23	105-8282-01	1	Shield-Side
24	321-3	1	Screw-HH
25	120-3172	1	Bracket
26	115-5216	1	Decal
27	2412-98	1	Clamp-Hose
28	2412-72	1	Clip-Closed, Insulated
29	105-8263-01	1	Bracket-ROPS
30	107-2552-01	1	Bracket-Bulkhead

● Not serviced separately

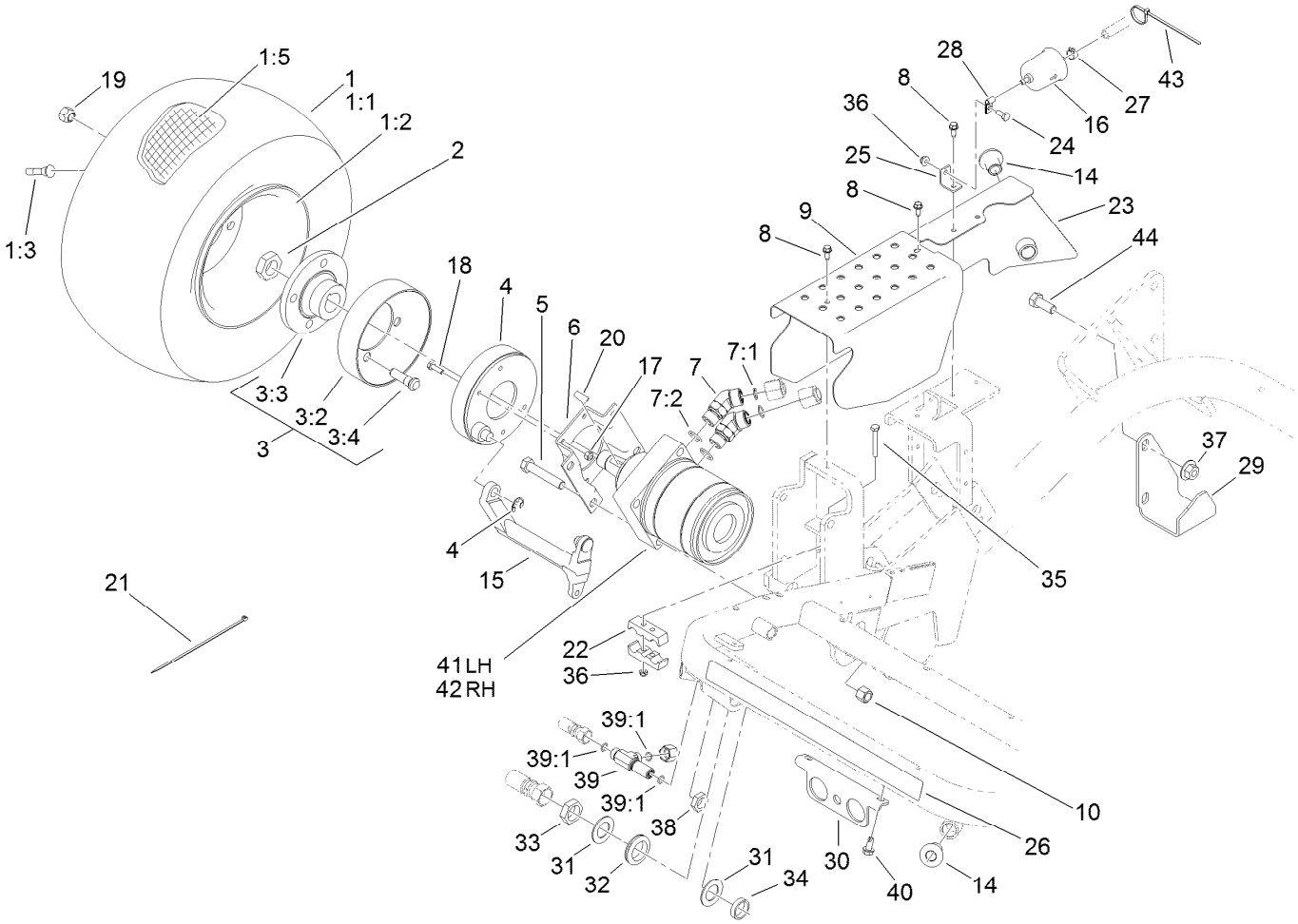

Front Wheel and Brake Assembly (continued)

Ref.	Part Number	Qty.	Description
31	69-9010	2	Washer
32	240-3	1	Grommet-Rubber
33	340-74	1	Nut-Lock, Bulkhead
34	69-9000	1	Spacer
35	321-11	2	Screw-HH
36	104-7201	3	Nut-HF, NI
37	32128-52	2	Nut-Lock, Flange
38	340-70	1	Nut-Lock

Ref.	Part Number	Qty.	Description
39	340-68	1	Fitting-Tee, Bulkhead
39:1	237-22	3	O-Ring
40	32104-32	2	Screw-HWH
41	110-4015	1	HYD Motor ASM (CCW)
42	110-4016	1	HYD Motor ASM (CW)
43	100-2894	3	Tie-Cable
44	3234-22	2	Screw-HHF

● Not serviced separately

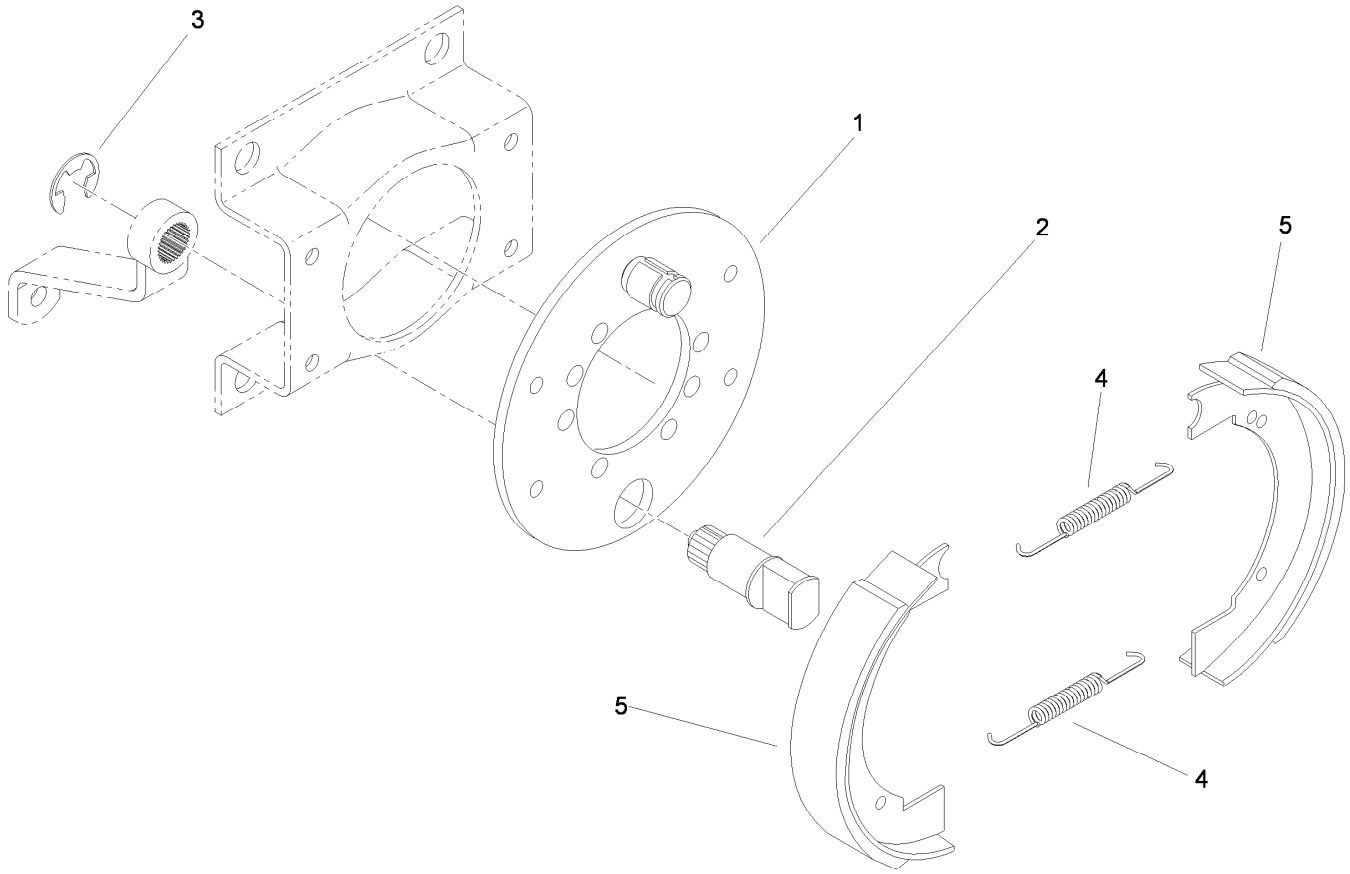

Brake Assembly No. 104-7705

Ref.	*Part Number*	*Qty.*	*Description*
1	70-9870	1	Plate-Backing
2	104-7707	1	Shaft-Cam, Brake
3	104-7706	1	E-Ring, Bowed
4	70-9880	2	Spring-Return
5	70-9840	2	Shoe-Brake

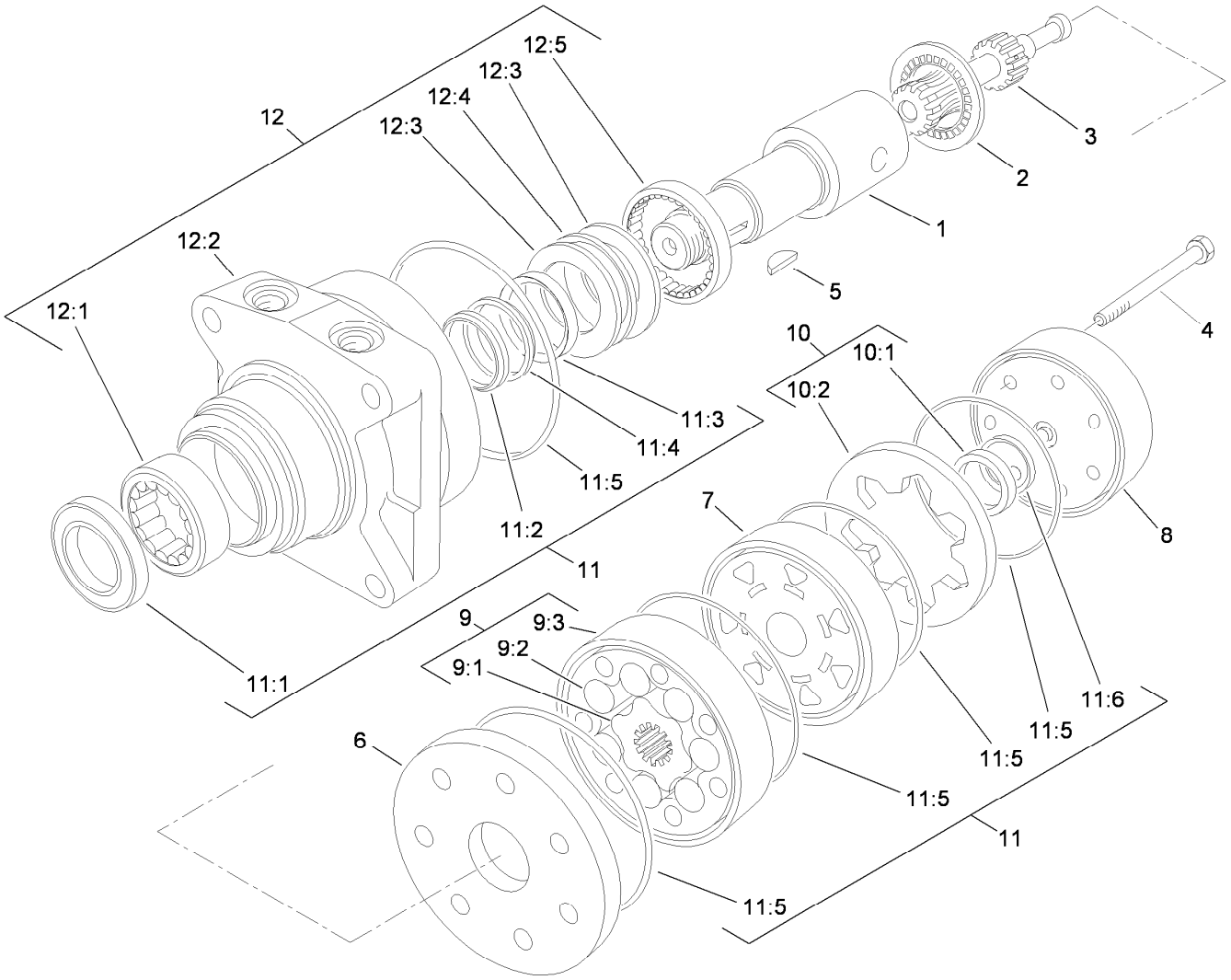

Hydraulic Motor Assembly (CCW) No. 110-4015

Ref.	Part Number	Qty.	Description
1	76-0860	1	Shaft-Coupling
2	76-0850	1	Bearing-Thrust
3	92-9761	1	Link-Drive
4	92-9762	7	Screw-HH
5	3257-42	1	Key-Woodruff
6	92-9754	1	Plate-Wear
7	76-0840	1	Manifold
8	76-0940	1	End Cover ASM
9	92-9763	1	Rotor Set
9:1		1	Rotor ●
9:2		1	Vane ●
9:3		1	Stator ●
10	76-0880	1	Commutator ASM
10:1		1	Commutator ●

Ref.	Part Number	Qty.	Description
10:2		1	Ring-Commutator ●
11	94-8178	1	Seal Kit
11:1		1	Seal-Dirt And Water ●
11:2		1	Backup-Ring ●
11:3		1	Seal-Shaft ●
11:4		1	Washer-Backup ●
11:5		5	Seal-Square, Ring (Inner) ●
11:6		1	Seal-Commutator ●
12	76-0810	1	Housing ASM
12:1		1	Bearing ●
12:2		1	Housing ●
12:3		2	Washer-Thrust ●
12:4		1	Bearing-Thrust ●
12:5		1	Bearing ●

● Not serviced separately

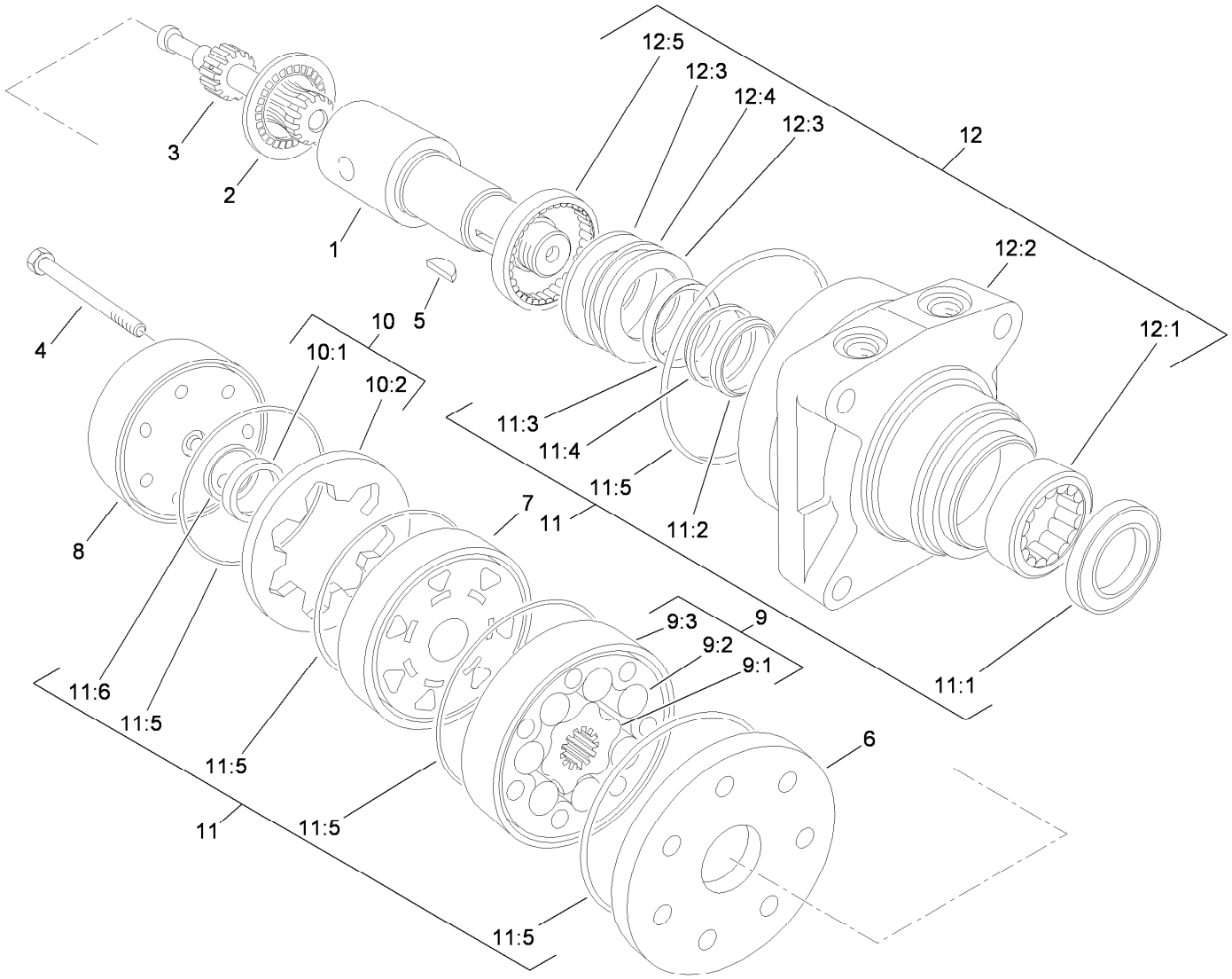

Hydraulic Motor Assembly (CW) No. 110-4016

Ref.	Part Number	Qty.	Description
1	76-0860	1	Shaft-Coupling
2	76-0850	1	Bearing-Thrust
3	92-9761	1	Link-Drive
4	92-9762	7	Screw-HH
5	3257-42	1	Key-Woodruff
6	92-9754	1	Plate-Wear
7	76-0840	1	Manifold
8	76-0940	1	End Cover ASM
9	92-9763	1	Rotor Set
9:1		1	Rotor ●
9:2		1	Vane ●
9:3		1	Stator ●
10	76-0880	1	Commutator ASM
10:1		1	Commutator ●

Ref.	Part Number	Qty.	Description
10:2		1	Ring-Commutator ●
11	94-8178	1	Seal Kit
11:1		1	Seal-Dirt And Water ●
11:2		1	Backup-Ring ●
11:3		1	Seal-Shaft ●
11:4		1	Washer-Backup ●
11:5		5	Seal-Square, Ring (Inner) ●
11:6		1	Seal-Commutator ●
12	76-0810	1	Housing ASM
12:1		1	Bearing ●
12:2		1	Housing ●
12:3		2	Washer-Thrust ●
12:4		1	Bearing-Thrust ●
12:5		1	Bearing ●

● Not serviced separately

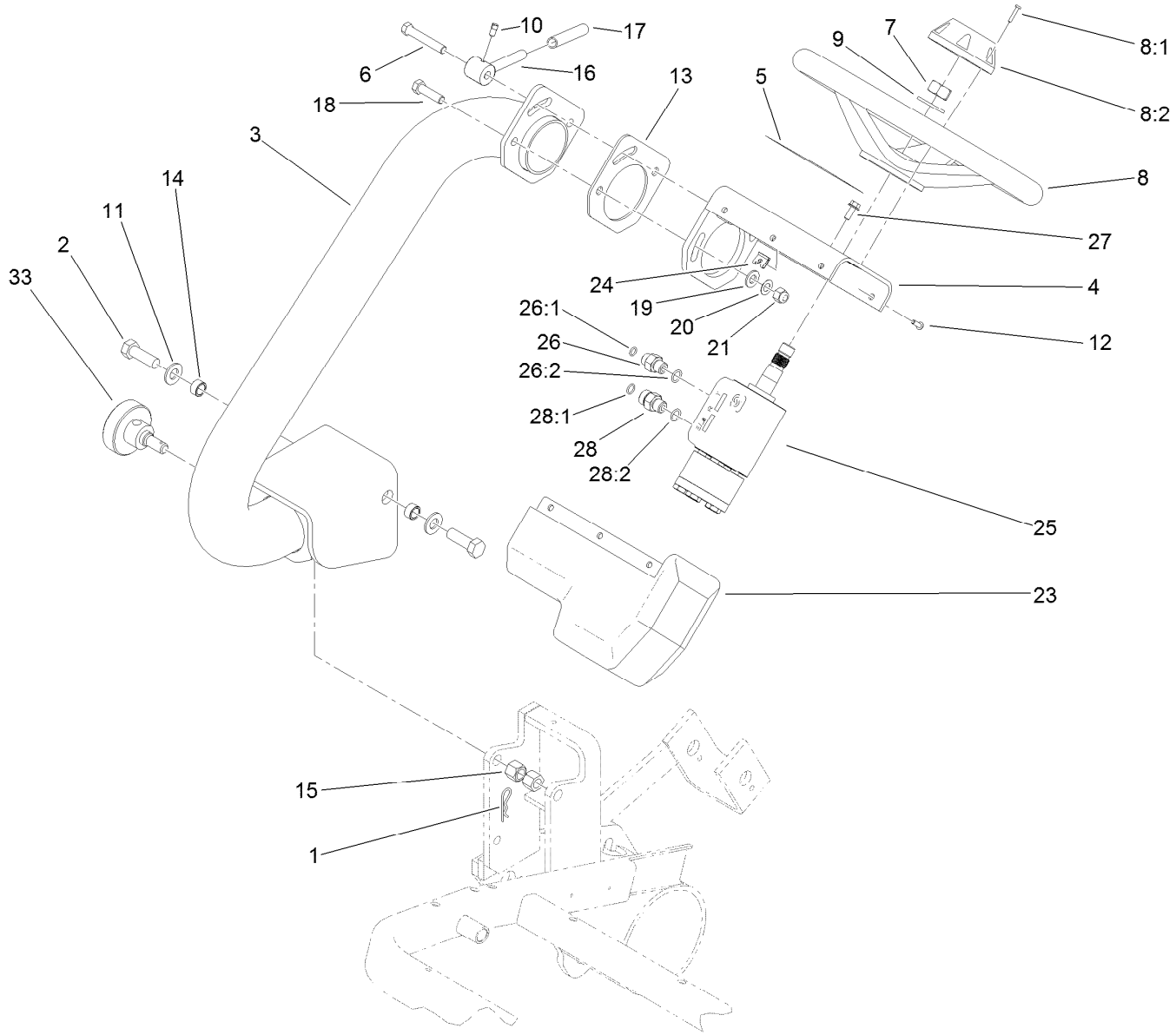

Steering Arm Assembly

Ref.	Part Number	Qty.	Description
1	3290-467	1	Pin-Hair
2	325-6	2	Screw-HH
3	105-0418-01	1	Arm-Steering
4	114-4693-03	1	Mount-Steering
5	121-2640	1	Decal-Danger, CE
5	121-2641	1	Decal-Danger
6	105-4326	1	Screw-HH, LH
7	3296-33	1	Nut-Lock, NI
8	75-0560	1	Steering Wheel ASM
8:1	32144-21	1	Screw
8:2	68-5140	1	Cap-Wheel, Steering
9	3256-27	1	Washer-Flat
10	3241-1	1	Screw-Set, SQH
11	3256-26	2	Washer-Flat
12	3274-39	6	Screw-HSBH
13	105-0457	1	Plate-Friction
14	47-2890	2	Bushing
15	3296-23	2	Nut-Lock, NI

Ref.	Part Number	Qty.	Description
16	119-3587	1	Lever-Steering
17	92-6798	1	Cap-Rod, Tilt
18	323-29	2	Screw-HH
19	3256-24	2	Washer-Flat
20	3290-477	2	Washer-Curved
21	3296-39	2	Nut-Lock, NI
23	83-0810	1	Cover-Steering
24	3290-277	6	Nut-Speed
25	114-4672	1	Steering Valve ASM
26	340-1	2	Fitting-Straight
26:1	237-21	1	O-Ring
26:2	237-42	1	O-Ring
27	33103-016	4	Screw-HHF
28	340-2	2	Fitting-Straight
28:1	237-22	1	O-Ring
28:2	237-42	1	O-Ring
33	117-9513	1	Knob-Steering

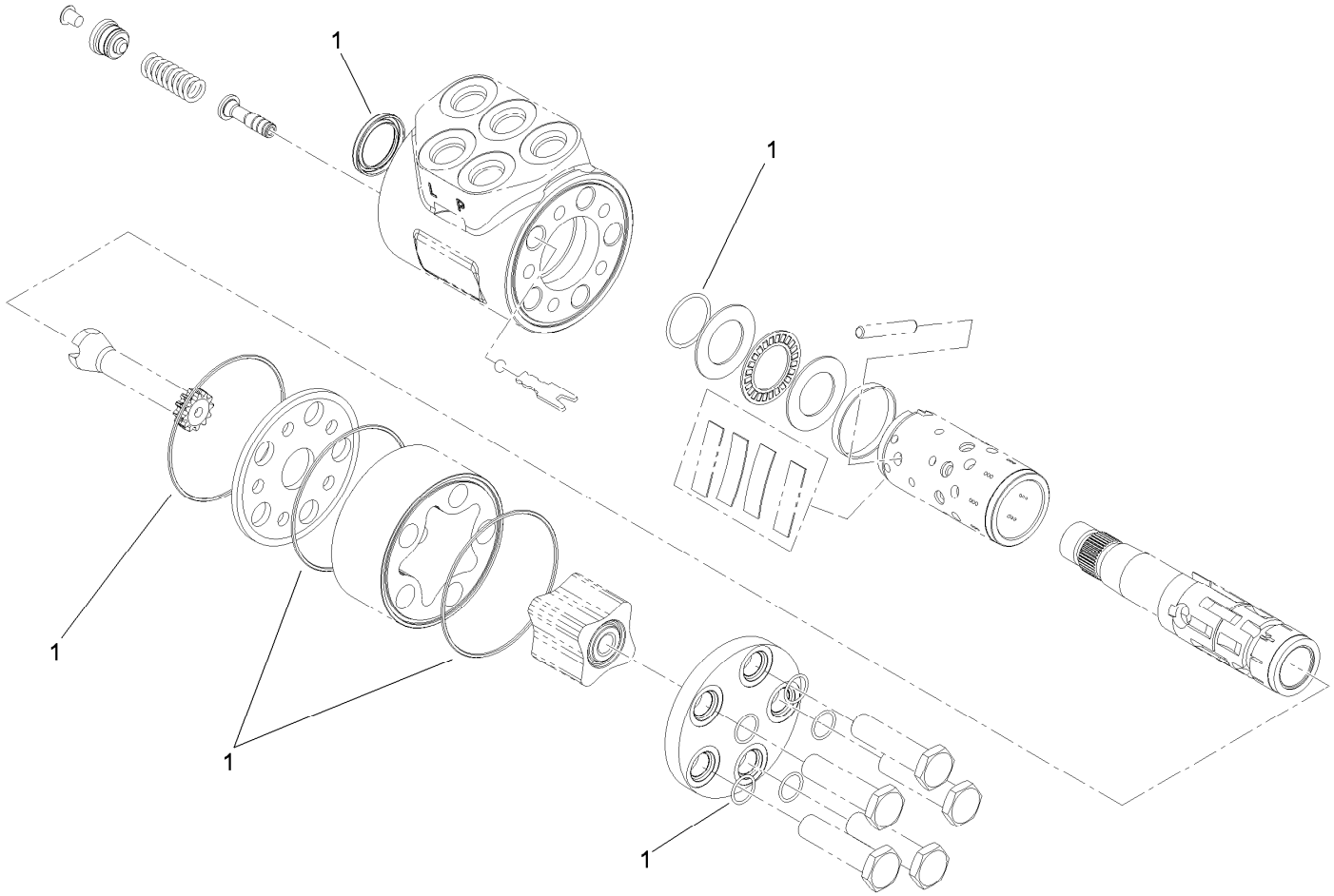

Steering Valve Assembly No. 114-4672

Ref.	*Part Number*	*Qty.*	*Description*
1	106-6716	1	Seal Kit

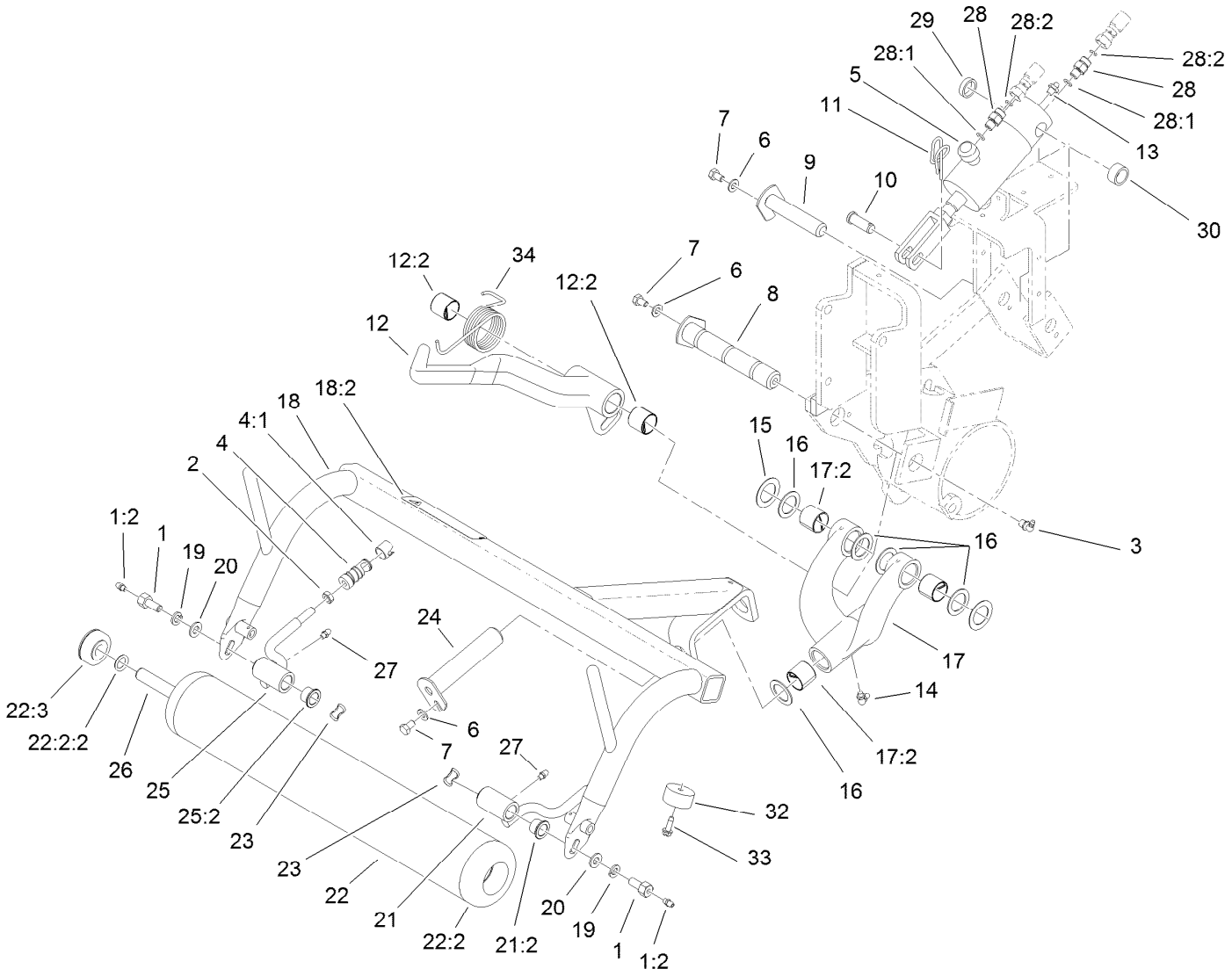

Right Hand Pull Frame Assembly

Ref.	Part Number	Qty.	Description
1	11-0160	2	Roller Shaft Screw ASM
1:2	302-5	1	Fitting-Grease
2	3220-3	2	Nut-HJ
3	302-33	1	Fitting-Grease
4	99-1460	2	Ball Joint Receiver ASM
4:1	99-1461	1	Sleeve-Joint, Ball
5	106-9066	1	HYD Cylinder ASM
6	3256-23	3	Washer-Plain
7	322-1	3	Screw-HH
8	114-4683	1	Pin-Hinge
9	120-3199	1	Pin-Pivot
10	283-8	1	Pin-Clevis
11	112-1491	1	Pin-Cotter
12	107-2599	1	RH Lift Arm ASM
12:2	125-5196	2	Bushing
13	302-2	1	Fitting-Grease
14	302-60	1	Fitting-Grease
15	5-1226	4	Washer

Ref.	Part Number	Qty.	Description
16	10-8110	6	Washer-Thrust
17	10-7820	1	Pivot Hinge ASM
17:2	125-5196	4	Bushing
18	117-9543	1	RH Pull Frame ASM
18:2	104-7729	1	Decal-Danger, CE
19	3253-21	2	Washer-Lock
20	3256-24	2	Washer-Flat
21	92-0586	1	Pull Arm ASM
21:2	125-5178	2	Bushing
22	99-4277	1	Roller ASM
22:2		2	Hub Yoke ASM ●
22:2:2	253-83	1	Seal-Oil
22:3	251-141	2	Bearing-Ball
23	3290-317	2	Washer-Spring
24	10-6090	1	Pin-Pivot
25	92-0585	1	Pull Arm ASM
25:2	125-5178	2	Bushing
26	21-8470	1	Shaft-Roller

● Not serviced separately

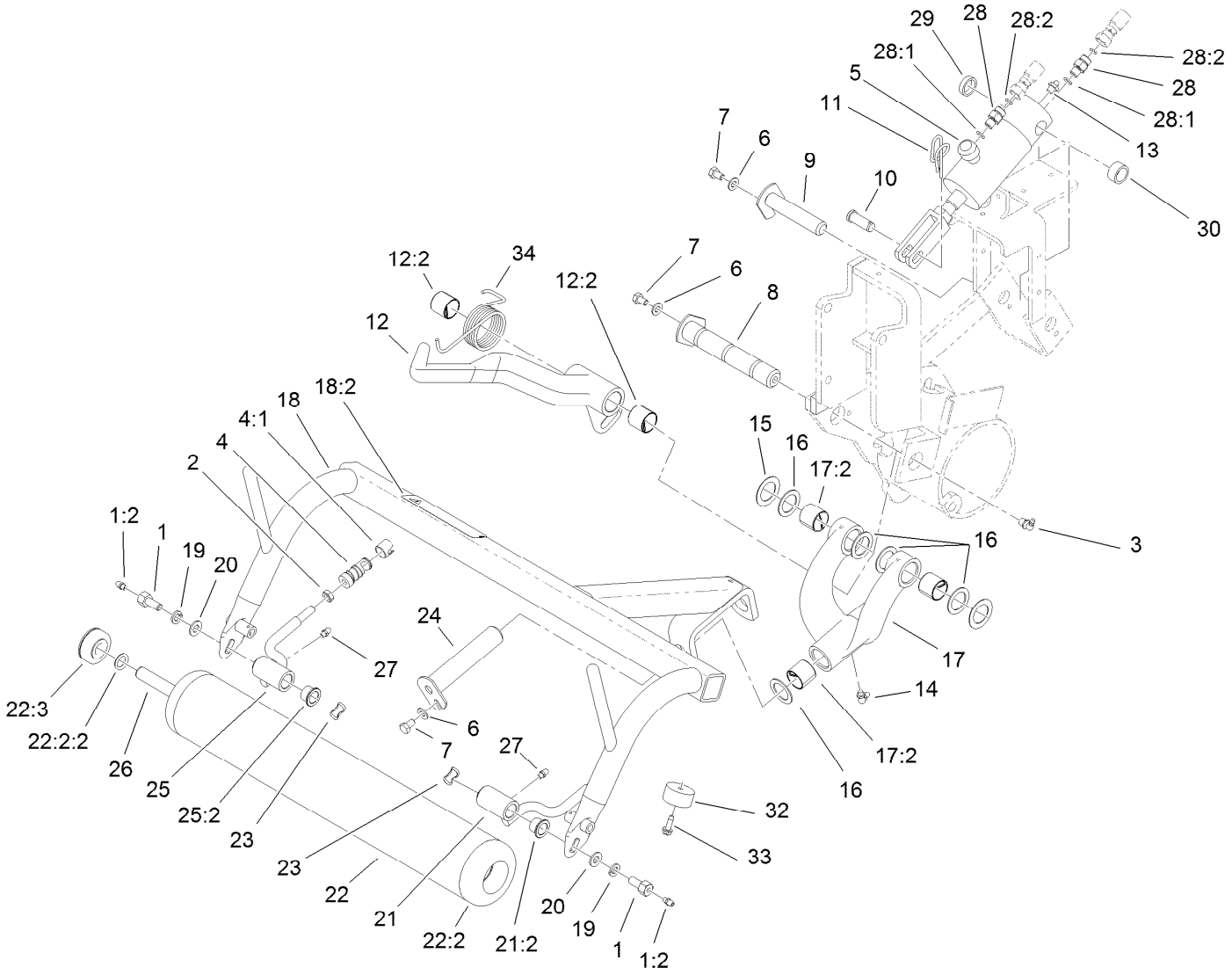

Right Hand Pull Frame Assembly (continued)

Ref.	Part Number	Qty.	Description
27	302-5	2	Fitting-Grease
28	340-92	2	Fitting-Straight
28:1	237-78	1	O-Ring
28:2	237-21	1	O-Ring
29	105-3828	1	Spacer

Ref.	Part Number	Qty.	Description
30	74-3730	1	Spacer-Spindle, Rear
32	94-4548	2	Bumper-Recessed
33	32104-95	2	Screw-HWH
34	110-3951	1	Spring-Torsion, RH

● Not serviced separately

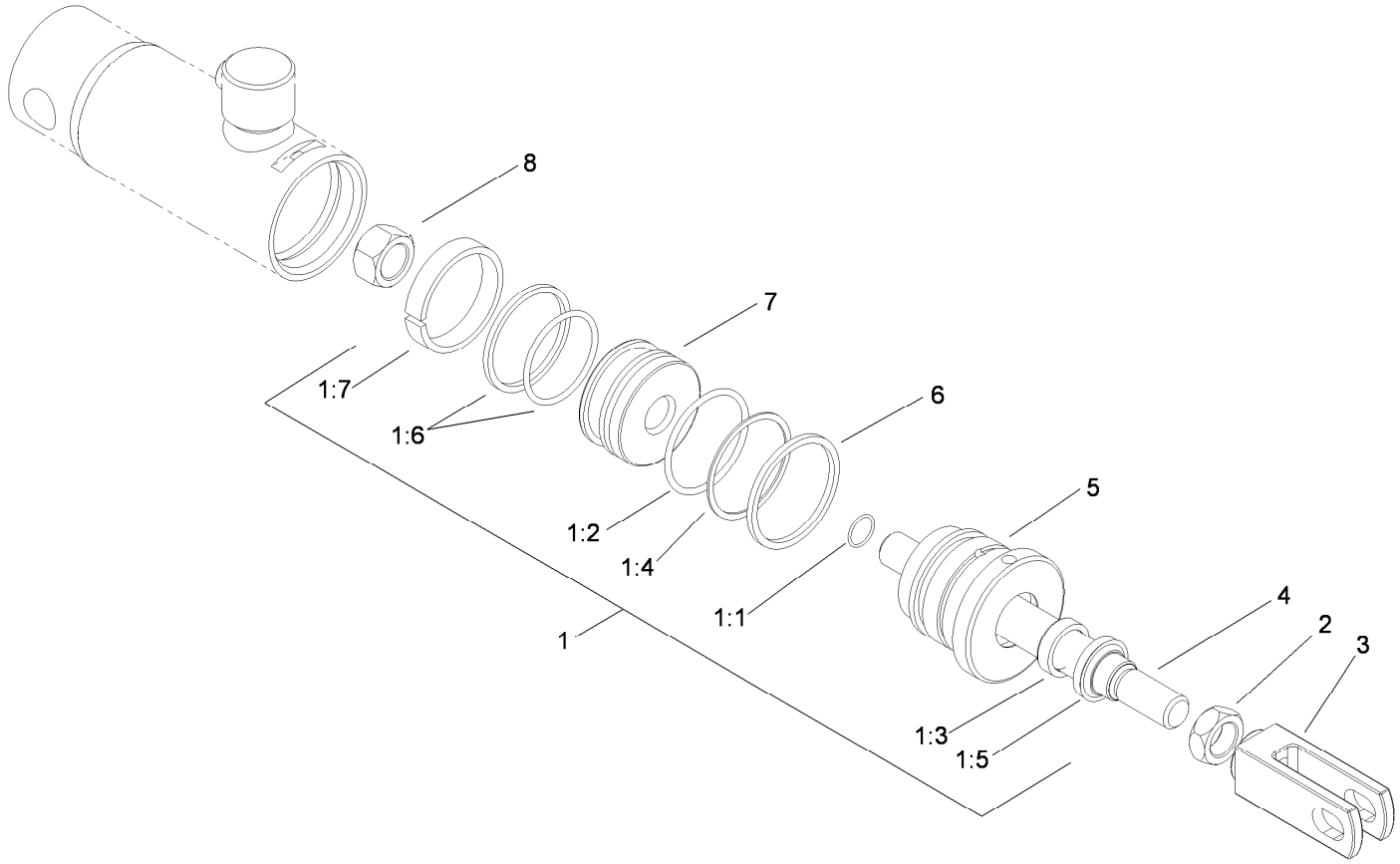

Hydraulic Cylinder Assembly No. 106-9066

Ref.	*Part Number*	*Qty.*	*Description*
1	107-2564	1	Seal Kit
1:1		1	O-Ring ●
1:2		1	O-Ring ●
1:3		1	Seal ●
1:4		1	Back-Up ●
1:5		1	Wiper ●
1:6		1	Seal-W/Out Ring ●
1:7		1	Ring-Wear ●
2	3220-6	1	Nut-Jam
3	106-9065	1	Clevis-Cylinder
4		1	Rod ●
5		1	Head ●
6	119-3501	1	Ring-Retaining
7		1	Piston ●
8		1	Locknut ●

● Not serviced separately

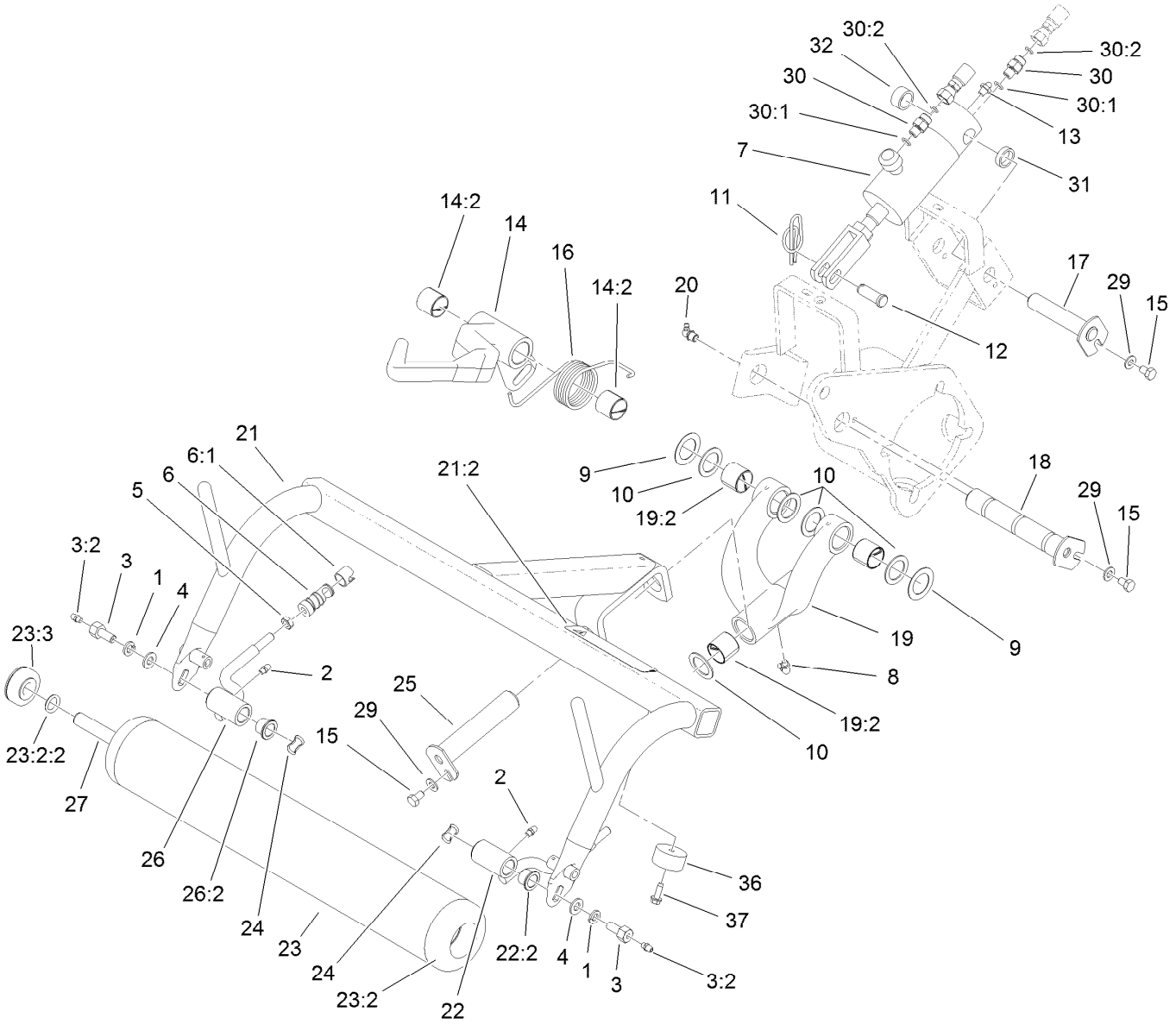

Left Hand Pull Frame Assembly

Ref.	Part Number	Qty.	Description
1	3253-21	2	Washer-Lock
2	302-5	2	Fitting-Grease
3	11-0160	2	Roller Shaft Screw ASM
3:2	302-5	1	Fitting-Grease
4	3256-24	2	Washer-Flat
5	3220-3	2	Nut-HJ
6	99-1460	2	Ball Joint Receiver ASM
6:1	99-1461	1	Sleeve-Joint, Ball
7	106-9066	1	HYD Cylinder ASM
8	302-60	1	Fitting-Grease
9	5-1226	4	Washer
10	10-8110	6	Washer-Thrust
11	112-1491	1	Pin-Cotter
12	283-8	1	Pin-Clevis
13	302-2	1	Fitting-Grease
14	107-2598	1	LH Lift Arm ASM
14:2	125-5196	2	Bushing
15	322-1	3	Screw-HH

Ref.	Part Number	Qty.	Description
16	110-3952	1	Spring-Torsion, LH
17	120-3199	1	Pin-Pivot
18	114-4683	1	Pin-Hinge
19	10-7820	1	Pivot Hinge ASM
19:2	125-5196	4	Bushing
20	302-33	1	Fitting-Grease
21	117-9542	1	LH Pull Frame ASM
21:2	104-7729	1	Decal-Danger, CE
22	92-0586	1	Pull Arm ASM
22:2	125-5178	2	Bushing
23	99-4277	1	Roller ASM
23:2		2	Hub Yoke ASM ●
23:2:2	253-83	1	Seal-Oil
23:3	251-141	2	Bearing-Ball
24	3290-317	2	Washer-Spring
25	10-6090	1	Pin-Pivot
26	92-0585	1	Pull Arm ASM
26:2	125-5178	2	Bushing

● Not serviced separately

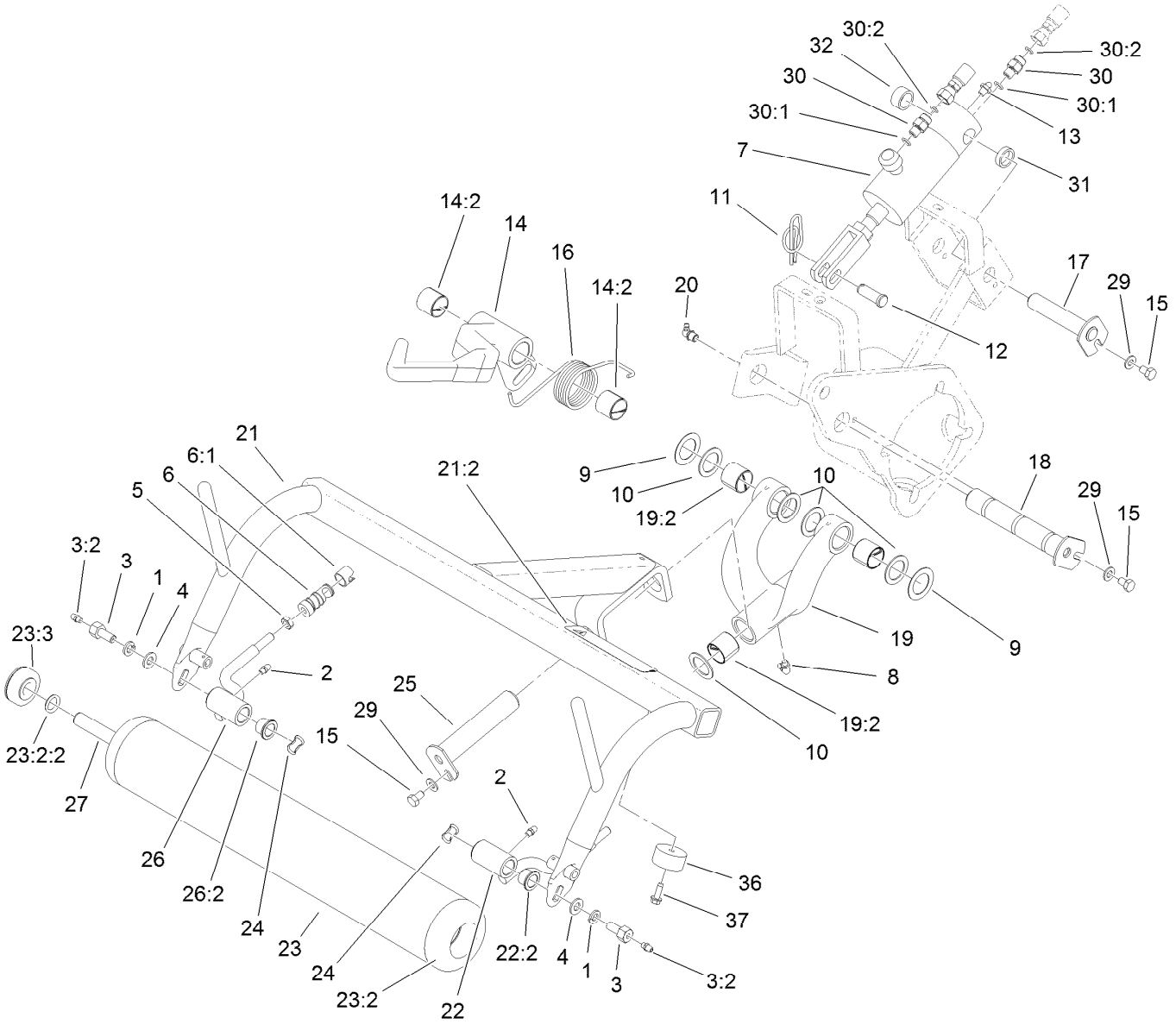

Left Hand Pull Frame Assembly (continued)

Ref.	Part Number	Qty.	Description
27	21-8470	1	Shaft-Roller
29	3256-23	3	Washer-Plain
30	340-92	2	Fitting-Straight
30:1	237-78	1	O-Ring
30:2	237-21	1	O-Ring

Ref.	Part Number	Qty.	Description
31	105-3828	1	Spacer
32	74-3730	1	Spacer-Spindle, Rear
36	94-4548	2	Bumper-Recessed
37	32104-95	2	Screw-HWH

● Not serviced separately

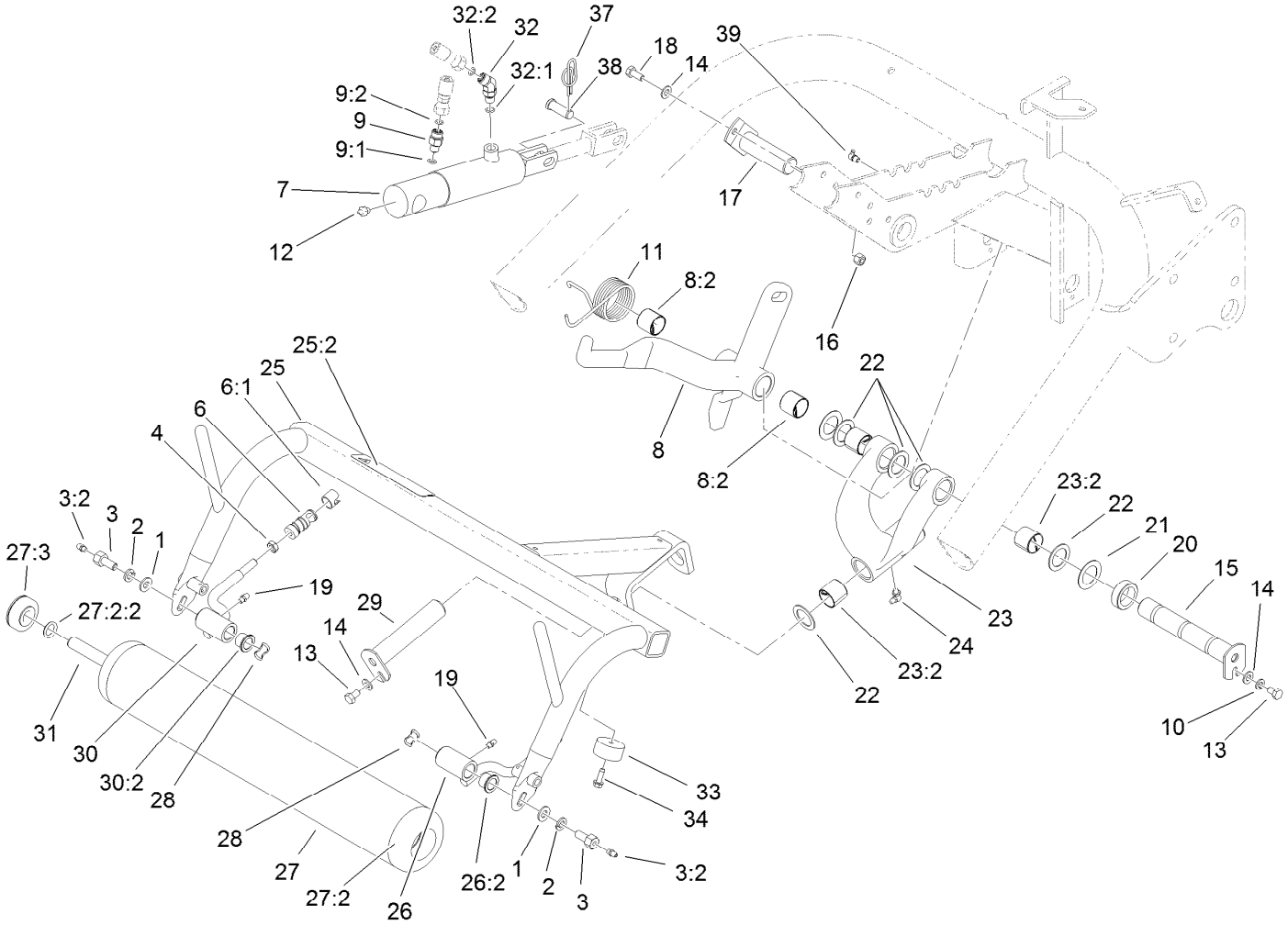

Center Pull Frame Assembly

Ref.	Part Number	Qty.	Description
1	3256-24	2	Washer-Flat
2	3253-21	2	Washer-Lock
3	11-0160	2	Roller Shaft Screw ASM
3:2	302-5	1	Fitting-Grease
4	3220-3	2	Nut-HJ
6	99-1460	2	Ball Joint Receiver ASM
6:1	99-1461	1	Sleeve-Joint, Ball
7	106-9064	1	HYD Cylinder ASM
8	110-3955	1	Center Lift Arm ASM
8:2	125-5196	2	Bushing
9	340-92	1	Fitting-Straight
9:1	237-78	1	O-Ring
9:2	237-21	1	O-Ring
10	3253-4	1	Washer-Lock
11	110-3953	1	Spring-Torsion, Center
12	302-2	1	Fitting-Grease
13	322-1	2	Screw-HH
14	3256-23	3	Washer-Plain

Ref.	Part Number	Qty.	Description
15	114-4685	1	Pin-Hinge
16	3296-29	1	Nut-Lock, NI
17	68-5560	1	Pin-Cylinder, Pivot
18	322-3	1	Screw-HH
19	302-5	2	Fitting-Grease
20	93-2384	1	Spacer-Carrier
21	5-1226	4	Washer
22	10-8110	6	Washer-Thrust
23	105-0452	1	Pivot Hinge ASM
23:2	125-5196	4	Bushing
24	302-60	1	Fitting-Grease
25	117-9541	1	Center Pull Frame ASM
25:2	104-7729	1	Decal-Danger, CE
26	92-0586	1	Pull Arm ASM
26:2	125-5178	2	Bushing
27	99-4277	1	Roller ASM
27:2		2	Hub Yoke ASM ●
27:2:2	253-83	1	Seal-Oil

● Not serviced separately

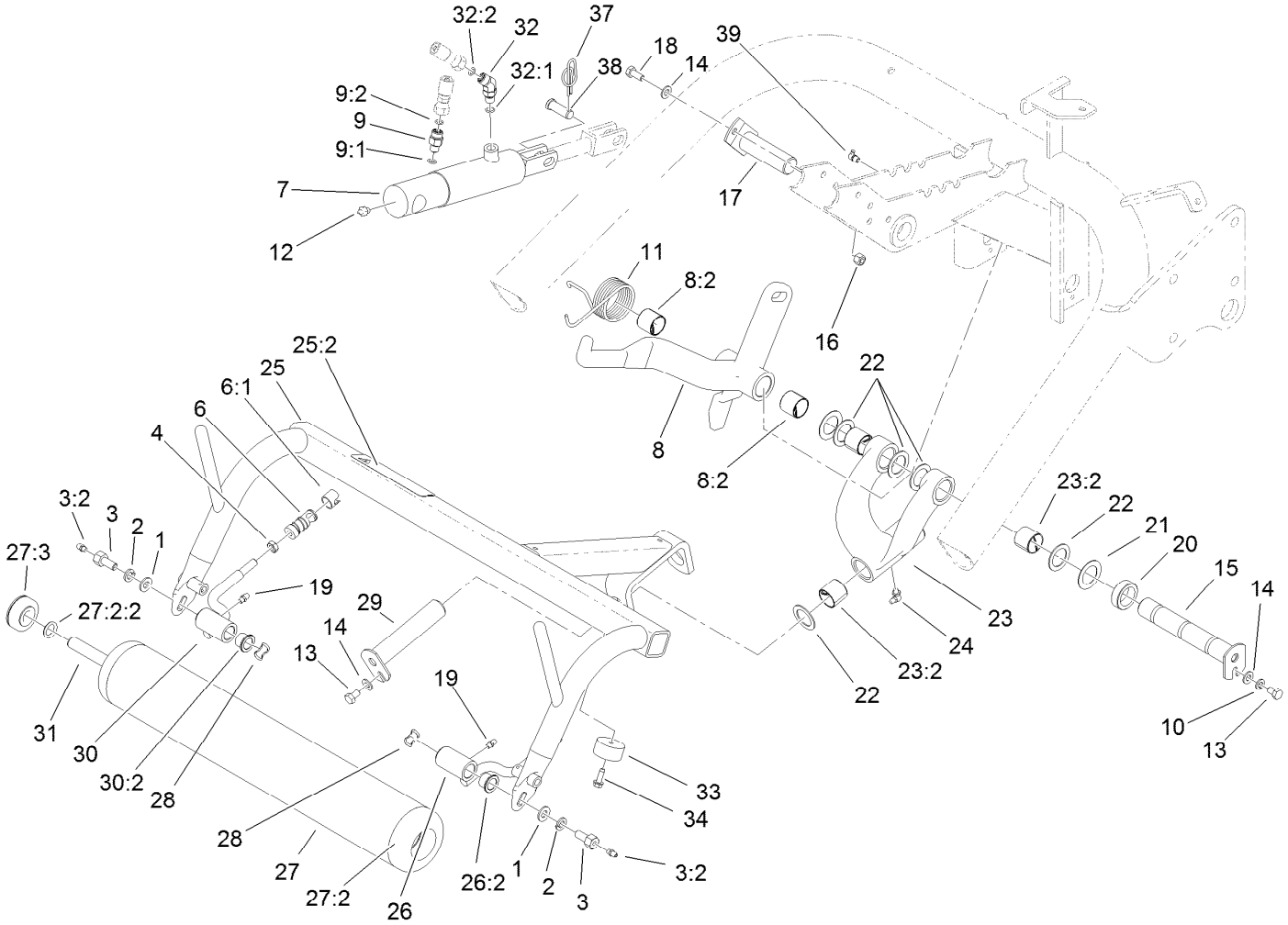

Center Pull Frame Assembly (continued)

Ref.	Part Number	Qty.	Description
27:3	251-141	2	Bearing-Ball
28	3290-317	2	Washer-Spring
29	10-6090	1	Pin-Pivot
30	92-0585	1	Pull Arm ASM
30:2	125-5178	2	Bushing
31	21-8470	1	Shaft-Roller
32	340-103	1	Fitting-HYD, 45 DEG

Ref.	Part Number	Qty.	Description
32:1	237-78	1	O-Ring
32:2	237-21	1	O-Ring
33	94-4548	2	Bumper-Recessed
34	32104-95	2	Screw-HWH
37	112-1491	1	Pin-Cotter
38	283-8	1	Pin-Clevis
39	302-33	1	Fitting-Grease

● Not serviced separately

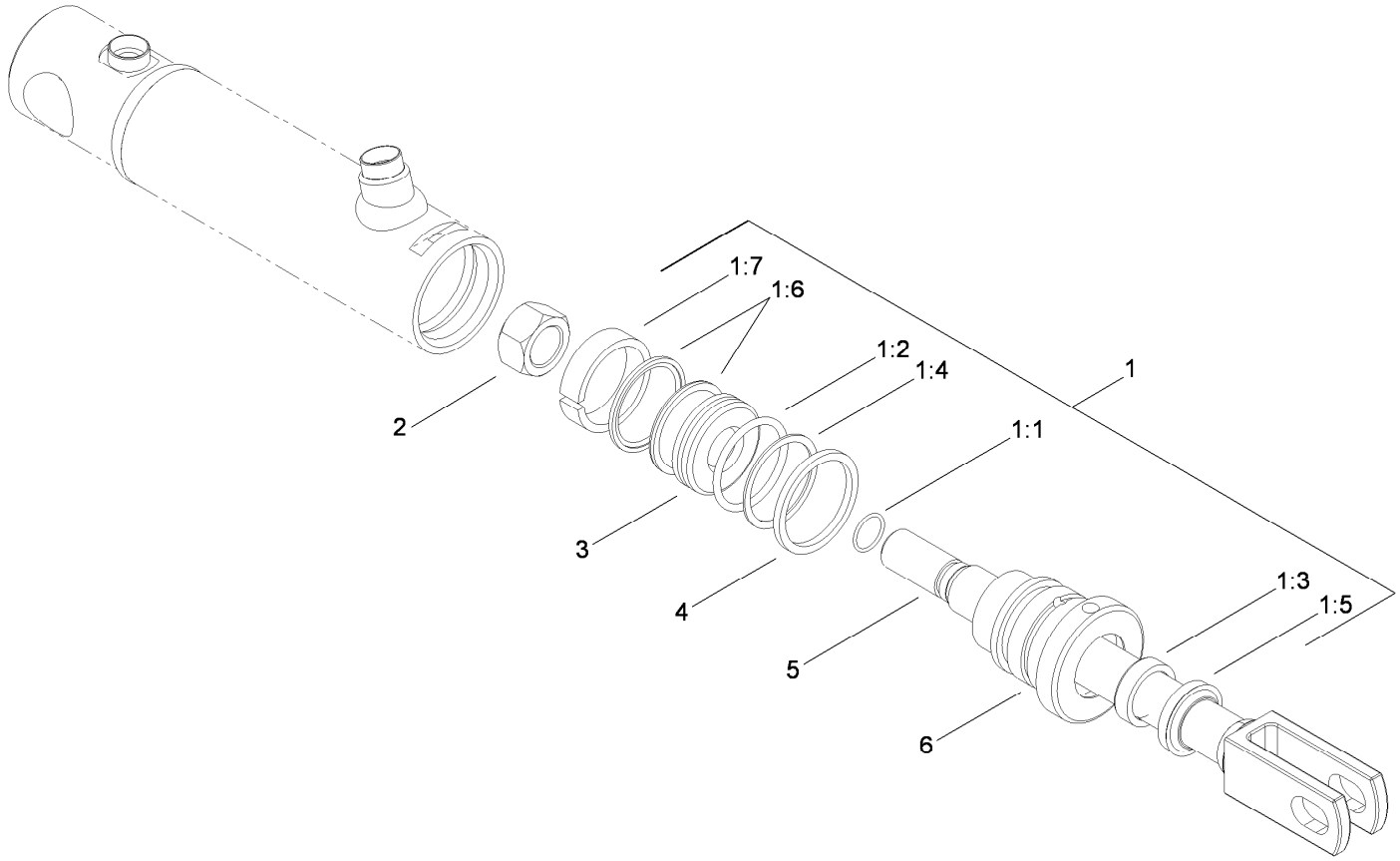

Hydraulic Cylinder Assembly No. 106-9064

Ref.	*Part Number*	*Qty.*	*Description*
1	107-2563	1	Seal Kit
1:1		1	O-Ring ●
1:2		1	O-Ring ●
1:3		1	Seal ●
1:4		1	Back-Up ●
1:5		1	Wiper ●
1:6		1	Seal W/Loader ●
1:7		1	Wear Ring ●
2		1	Locknut ●
3		1	Piston ●
4	117-9548	1	Ring-Retaining
5		1	Rod ASM ●
6		1	Head ●

● Not serviced separately

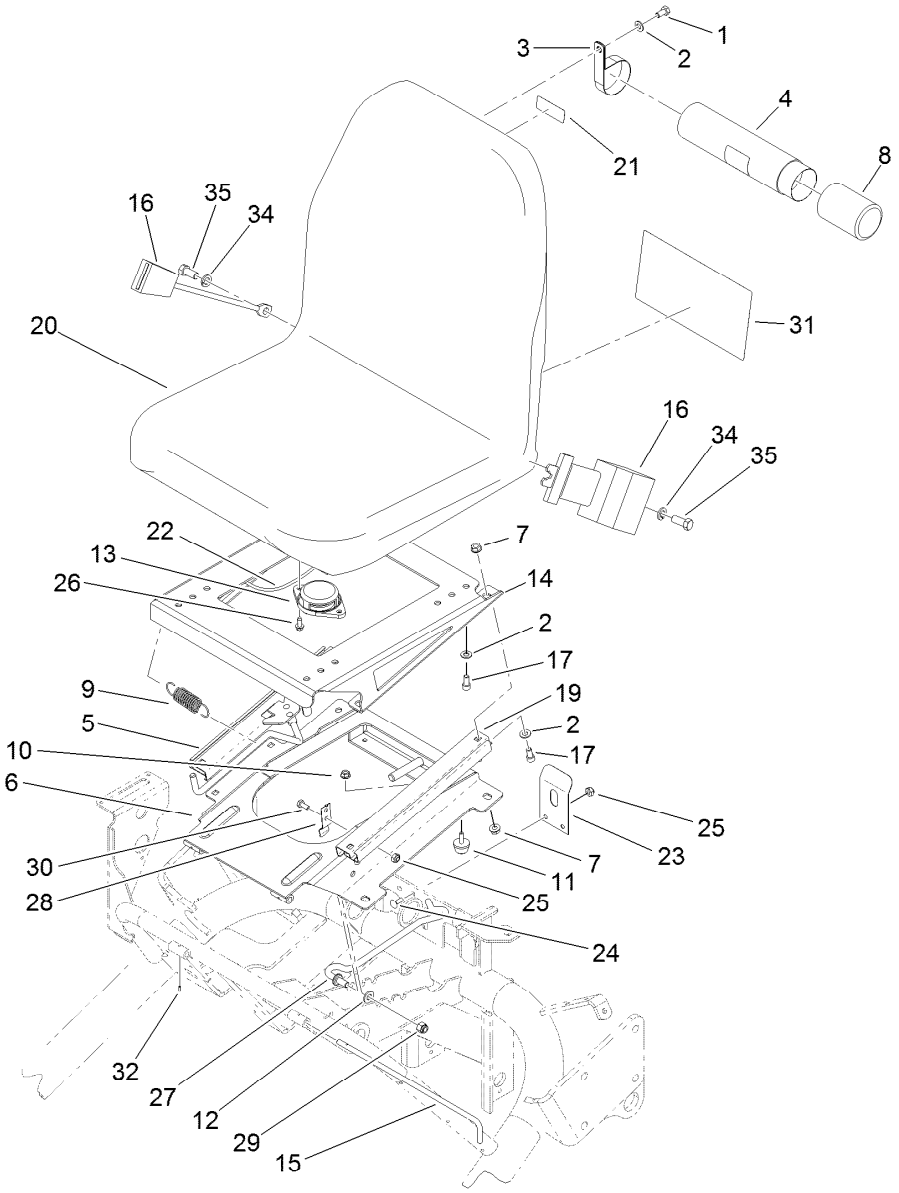

Seat Assembly

Ref.	Part Number	Qty.	Description
1	322-2	2	Screw-HH
2	3256-23	10	Washer-Plain
3	2412-133	2	Clamp-R
4	104-7050	1	Tube-Manual
5	105-8265	1	Adjuster-Seat
6	105-0464-03	1	Plate-Seat
7	32128-25	8	Nut-HF
8	104-7048	1	Cap-Housing
9	88-6330	1	Spring-Extension
10	32128-33	2	Nut-HF
11	1-523420	2	Bumper
12	3256-24	1	Washer-Flat
13	92-6282	1	Switch-Seat
14	105-0466-03	1	Plate-Seat, Upper
15	105-0483	1	Rod-Pivot, Seat
16	100-4928	1	Belt-Seat
17	3274-12	8	Screw-HSH
19	51-0780	1	Slider-Seat
20	104-4620	1	Seat
21	93-6686	1	Decal-Oil, HYD
22	108-9466	1	Harness-Wire, Seat

Ref.	Part Number	Qty.	Description
23	66-2630	1	Latch-Seat
24	3229-1	2	Screw-CARR
25	3296-16	4	Nut-Lock, NI
26	32144-10	2	Screw-HWH
27	106-4643	1	Rod-Prop, Seat
28	68-5310	1	Clip-Rod, Prop
29	3296-39	1	Nut-Lock, NI
30	321-3	2	Screw-HH
31	121-9566	1	Decal-Service
31	121-9576	1	Decal-Service, Spanish
31	121-9577	1	Decal-Service, French
31	121-9578	1	Decal-Service, German
31	121-9579	1	Decal-Service, Swedish
31	121-9580	1	Decal-Service, Italian
31	121-9581	1	Decal-Service, Portuguese
31	121-9582	1	Decal-Service, Norwegian
31	121-9583	1	Decal-Service, Finnish
31	121-9584	1	Decal-Service, Danish
31	121-9585	1	Decal-Service, Dutch
31	121-9586	1	Decal-Service, Japanese
32	32121-7	1	Pin-Roll, Slotted

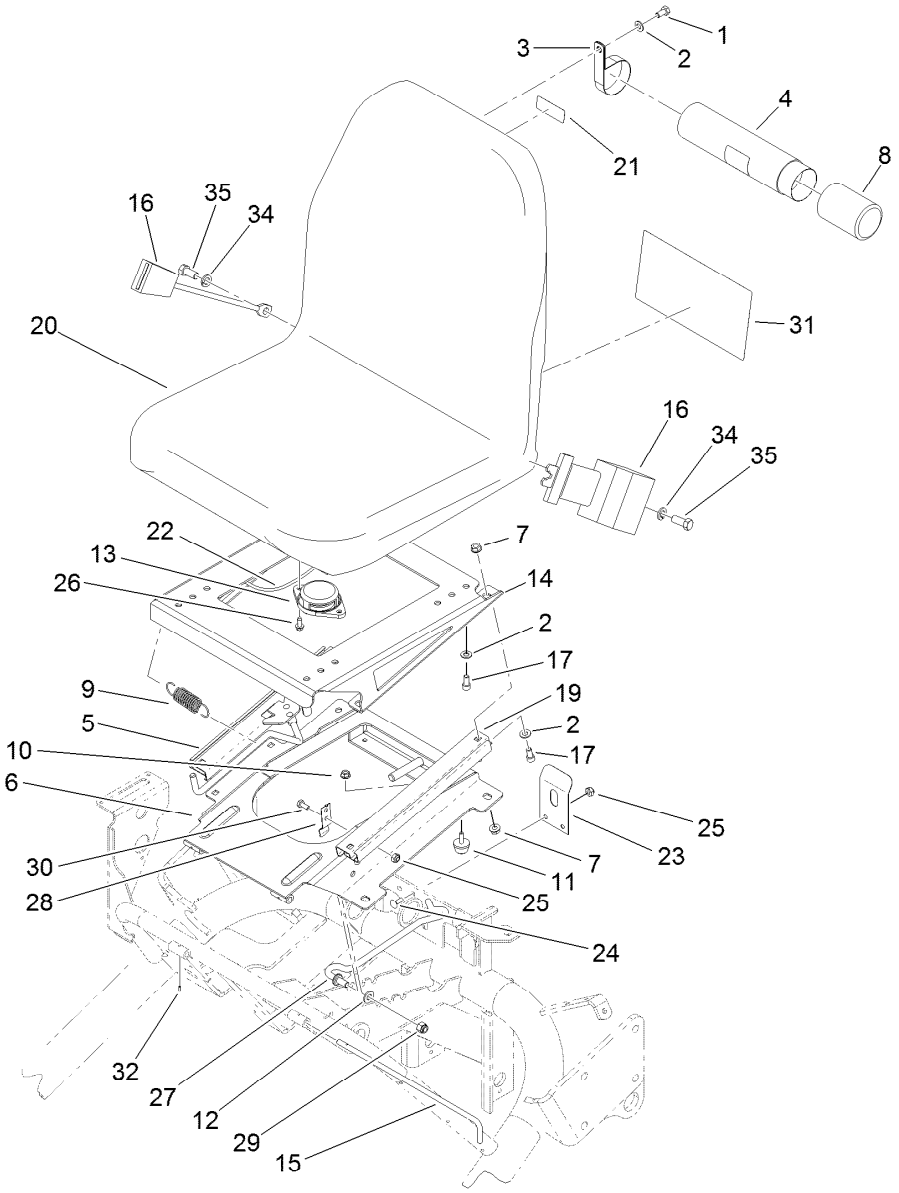

Seat Assembly (continued)

Ref.	Part Number	Qty.	Description
34	3253-6	2	Washer-Lock
35	3212-4	2	Screw-HH

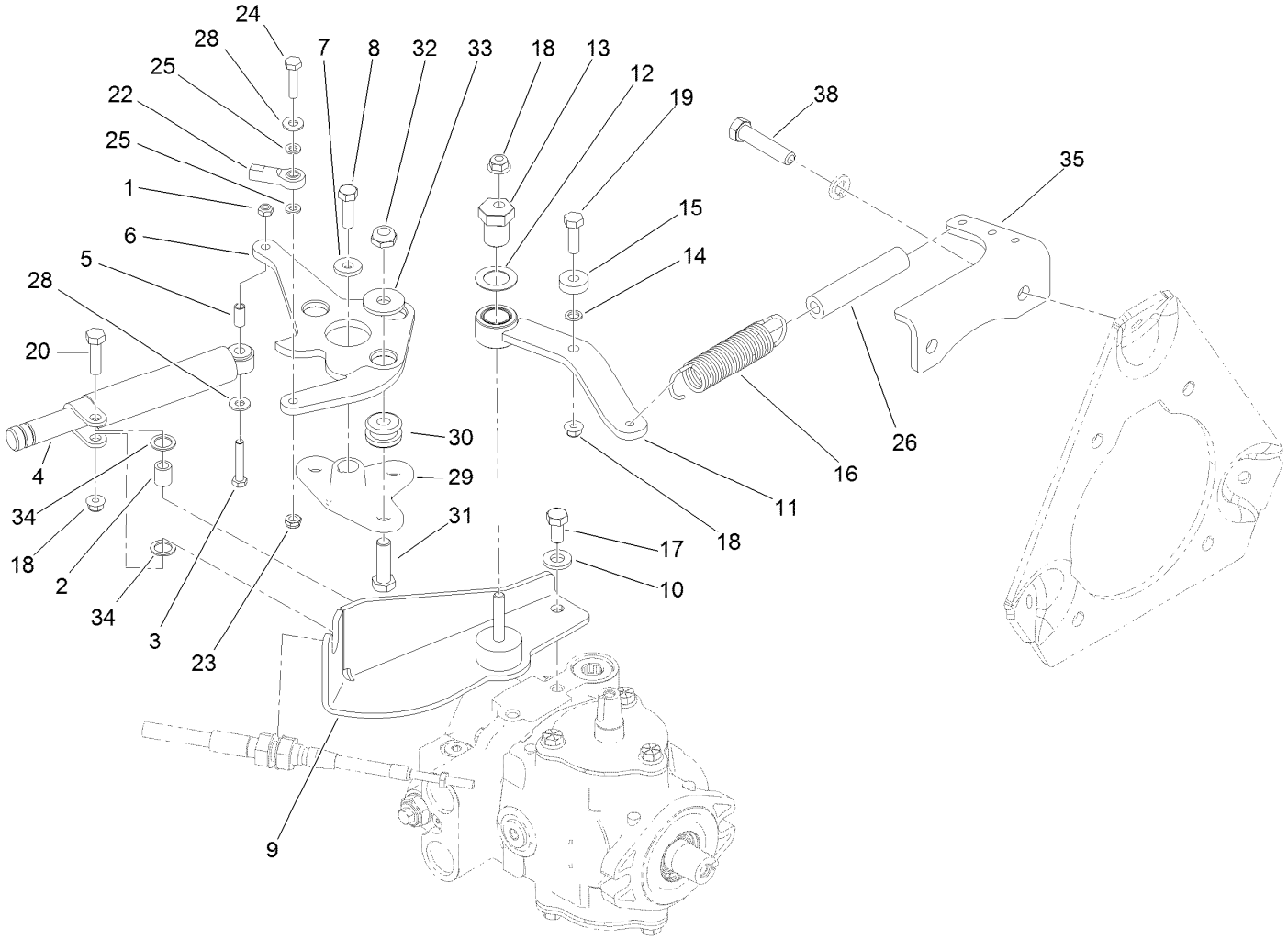

Neutral System Assembly

Ref.	Part Number	Qty.	Description
1	33023-00	1	Nut-Lock
2	94-8197	1	Tube-Pivot
3	33113-035	1	Screw-HH
4	76-8870	1	Damper-Lever
5	94-1312	1	Spacer-Pivot
6	105-5477-03	1	Lever-Pump
7	88-7200	1	Washer-Flat
8	3210-6	1	Screw-HH
9	105-5475	1	Cable Support ASM
10	100-4852	2	Washer-Hardened
11	105-4302	1	Neutral Arm ASM
12	3-6498	1	Washer-Thrust
13	93-2111	1	Stud-Traction
14	75-5470	1	Spacer-Bearing
15	251-259	1	Bearing-Ball
16	94-1369	1	Spring-Extension
17	323-5	2	Screw-HH

Ref.	Part Number	Qty.	Description
18	104-8300	3	Nut-HF, NI
19	322-5	1	Screw-HH
20	322-6	1	Screw-HH
22	2411-41	1	Rod End-Ball Joint
23	104-7201	1	Nut-HF, NI
24	321-8	1	Screw-HH
25	33093-00	2	Washer-Flat
26	99-4251	1	Hose-Dampener
28	3256-22	2	Washer-Flat
29	117-9500	1	Plate-Pivot
30	63-9750	3	Mount
31	323-29	3	Screw-HH
32	3296-59	3	Nut-Lock, NI
33	93-8806	3	Washer-Hardened
34	94-8196	2	Washer-Nylon
35	105-4307-03	1	Bracket-Spring
38	324-8	2	Screw-HH

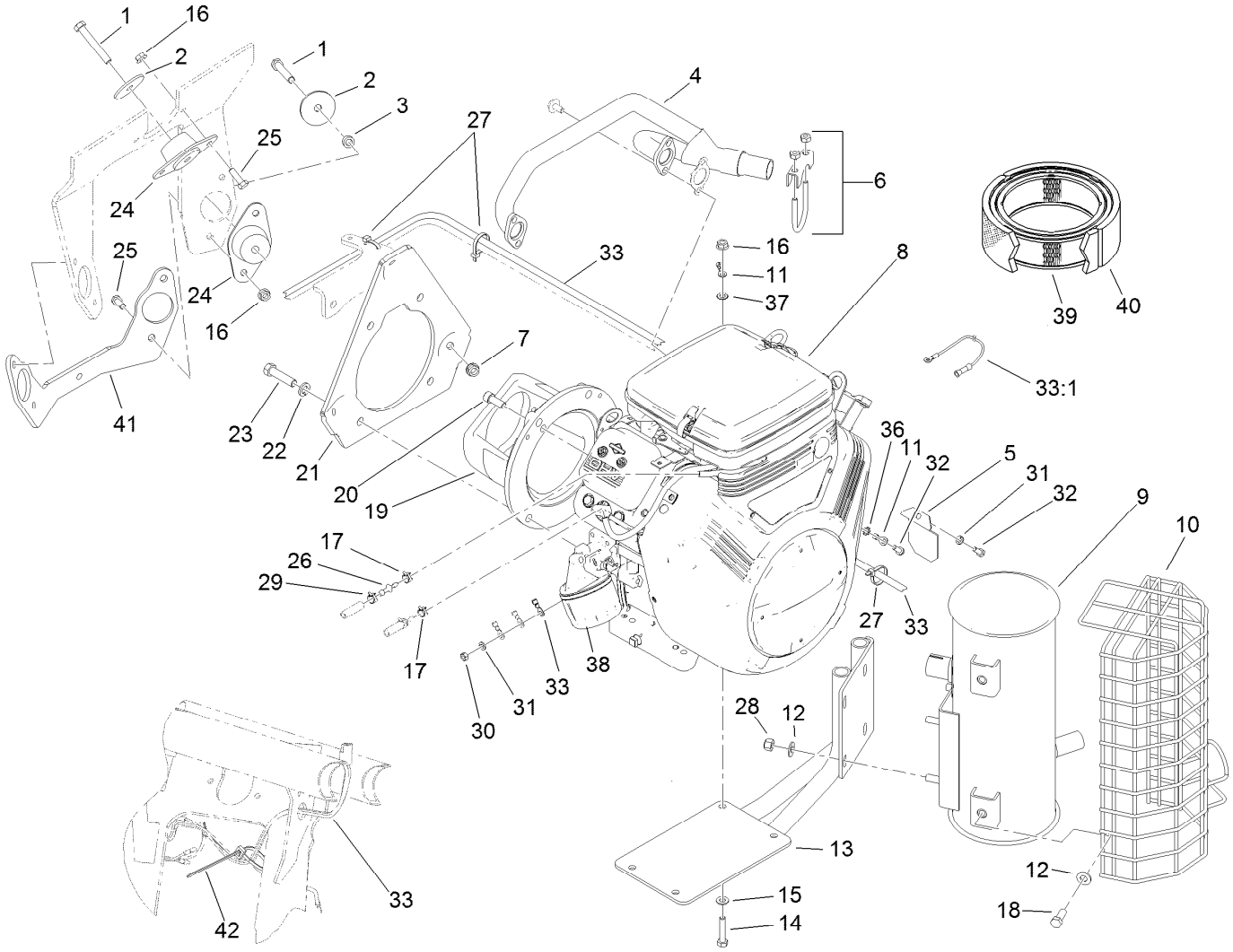

Engine Installation Assembly

Ref.	Part Number	Qty.	Description
1	323-13	3	Screw-HH
2	83-1040	3	Washer-Flat
3	93-9847	2	Spacer
4	119-4128	1	Manifold-Exhaust
5	83-2310	1	Shield-Regulator
6	2112-11	1	Clamp-Muffler
7	3290-357	3	Nut-HSF
8	121-2553	1	Engine-Briggs And Stratton ●
9	110-4001	1	Muffler
10	112-0291	1	Shield-Muffler
11	108-6486	1	Wire-Ground
12	100-4852	8	Washer-Hardened
13	112-9196-03	1	Mount-Muffler
14	322-10	4	Screw-HH
15	87-8640	4	Washer-Flat
16	32128-20	8	Nut-HF
17	2412-80	2	Clamp-Hose

Ref.	Part Number	Qty.	Description
18	323-5	4	Screw-HH
19	83-1060-03	1	Adapter-Pump
20	3274-7	2	Screw-HSH
21	85-8120-03	1	Plate-Mount, Engine
22	3253-6	4	Washer-Lock
23	324-7	2	Screw-HH
24	107-2560	3	Mount-Engine
25	322-5	6	Screw-HH
26	121-2573	1	Fitting-Straight
27	3290-379	3	Tie-Cable
28	32152-2	4	Nut-Lock, Cone
29	2412-98	1	Clamp-Hose
30	43-2830	1	Nut-Hex
31	3253-3	2	Washer-Lock
32	32144-10	2	Screw-HWH
33	105-8276	1	Harness-Wire, Engine
33:1	106-4642	1	Harness-Wire, Fusible Link
36	3255-7	1	Washer-Lock/EXT

● Obtain parts from www.briggsandstratton.com

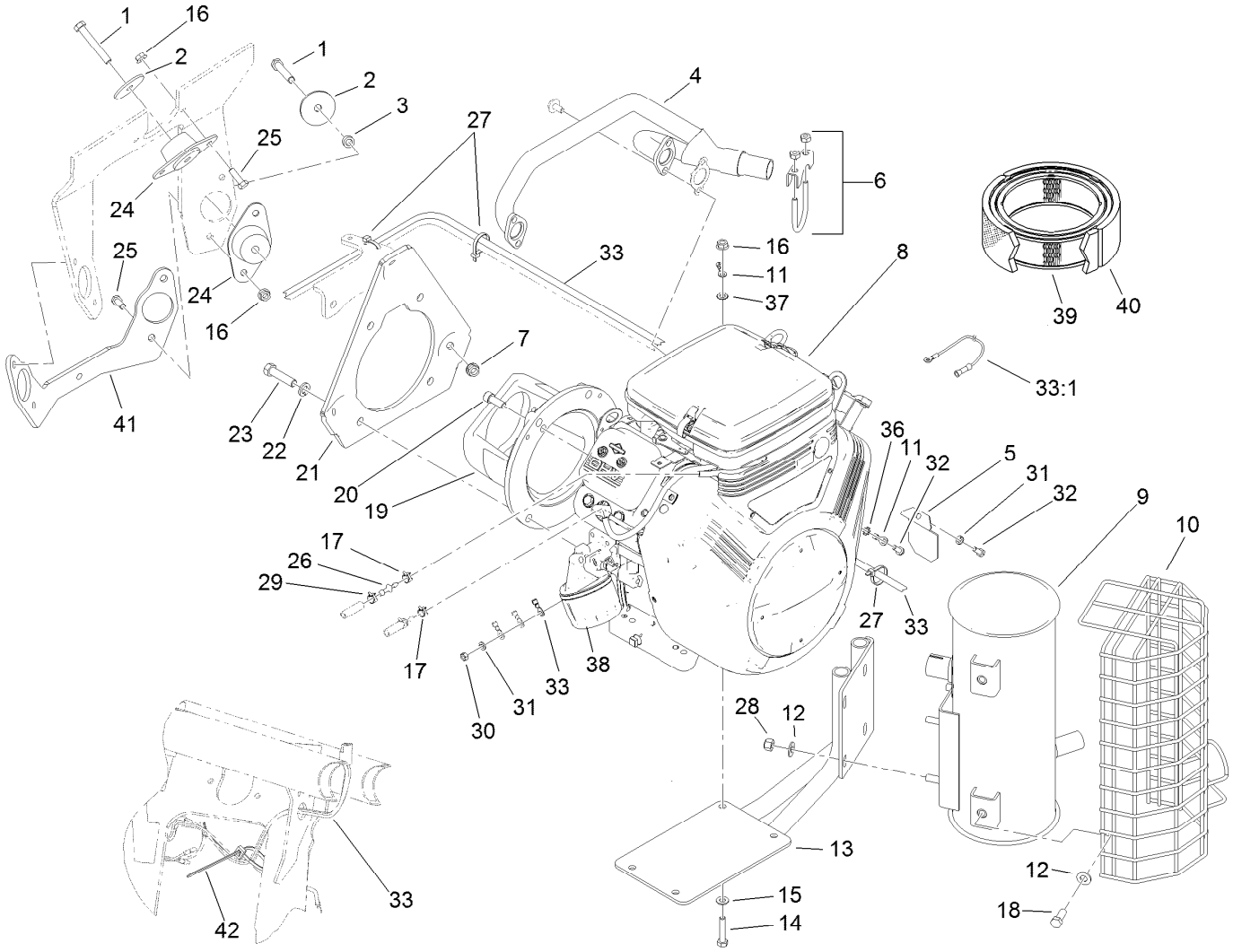

Engine Installation Assembly (continued)

Ref.	Part Number	Qty.	Description
37	3255-8	1	Washer-Lock
38	107-7817	1	Filter-Oil, Engine
39	92-0527	1	Cartridge-Cleaner, Air
40	92-0530	1	Element-Filter
41	121-9539-01	1	Support-Engine
42	3290-378	1	Tie-Cable

● Obtain parts from www.briggsandstratton.com

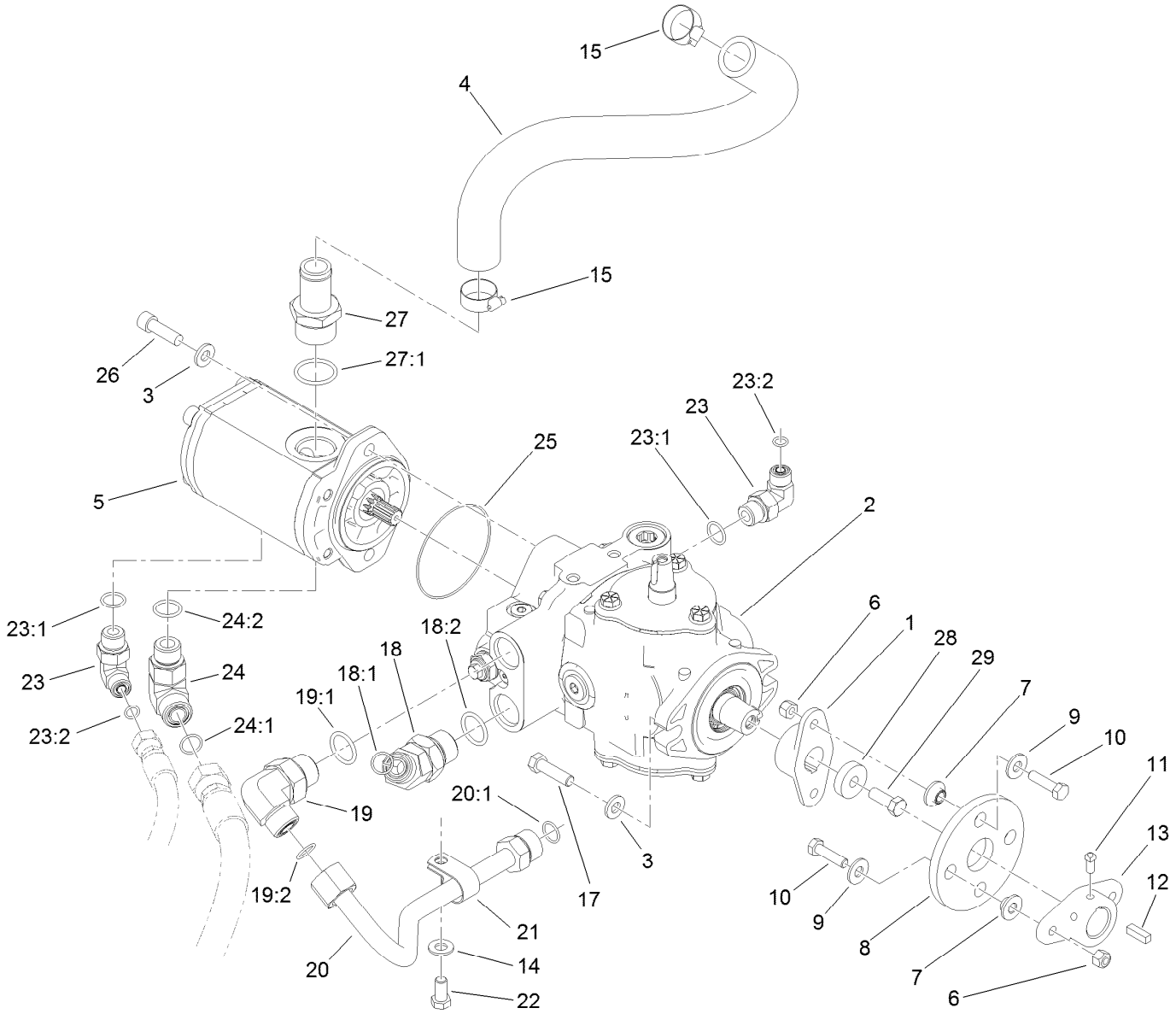

Hydrostat and Gear Pump Drive Assembly

Ref.	Part Number	Qty.	Description
1	119-4485	1	Hub-Pump
2	121-9557	1	Pump-Hydro
3	100-4852	4	Washer-Hardened
4	105-8285	1	Hose-Inlet, Pump
5	114-9956	1	HYD Gear Pump ASM
6	3296-29	4	Nut-Lock, NI
7	27-6600	4	Spacer-Coupling
8	115-4523	1	Coupling-Rubber
9	3256-3	4	Washer-Flat
10	322-6	4	Screw-HH
11	3241-7	2	Screw-SQH
12	10-7070	1	Key-Square
13	110-5236	1	Hub-Engine
14	3256-24	1	Washer-Flat
15	2412-34	2	Clamp-Hose
17	323-7	2	Screw-HH
18	340-156	1	Fitting-Elbow 45
18:1	237-65	1	O-Ring
18:2	237-81	1	O-Ring

Ref.	Part Number	Qty.	Description
19	340-139	1	Fitting-Elbow 90
19:1	237-81	1	O-Ring
19:2	237-65	1	O-Ring
20	121-2561	1	Tube-HYD
20:1	237-65	1	O-Ring
21	2412-41	1	Clamp-R
22	323-4	1	Screw-HH
23	340-18	2	Fitting-HYD, 90 DEG
23:1	237-79	1	O-Ring
23:2	237-22	1	O-Ring
24	340-17	1	Fitting-Elbow, 90 DEG
24:1	237-65	1	O-Ring
24:2	237-80	1	O-Ring
25	353-949	1	O-Ring
26	3274-1	2	Screw-HSH
27	354-78	1	Fitting-STR
27:1	237-146	1	O-Ring
28	53-7930	1	Spacer-Pivot
29	3211-4	1	Screw-HH

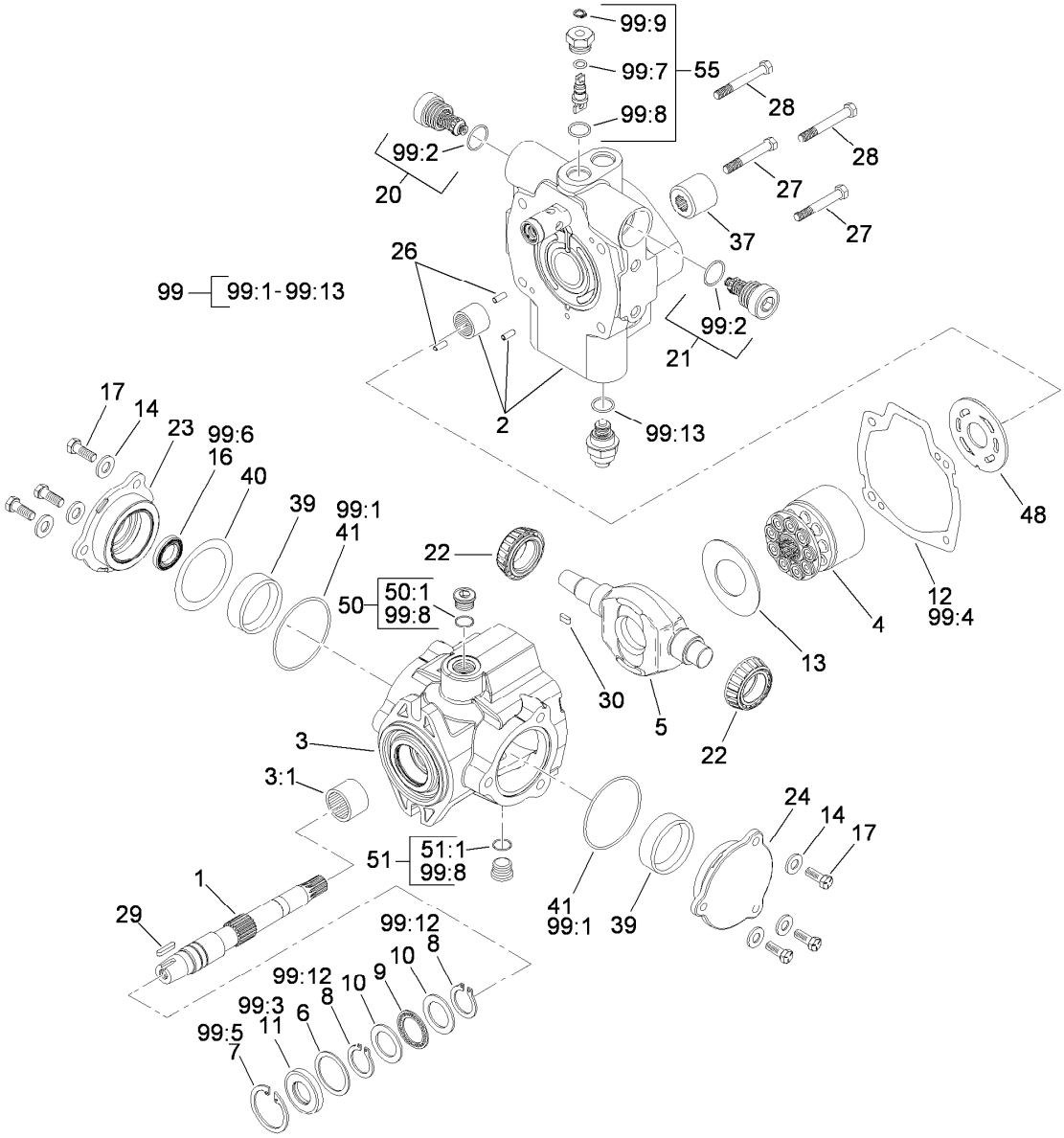

Hydraulic Pump Assembly No. 121-9557

Ref.	Part Number	Qty.	Description
1	119-7148	1	Shaft-Drive, Tapered
2	121-9574	1	Endcover ASM
3	100-3176	1	Housing ASM
3:1	94-6363	1	Bearing
4	76-6070	1	Rotating Kit
5	100-3175	1	Camplate
6	33-3720	1	Washer
7	32151-13	1	Ring-Retaining
8	32151-29	2	Ring-Retaining
9	252-66	1	Bearing-Thrust
10	252-71	2	Washer-Thrust
11	104-4861	1	Seal-Shaft
12	33-4930	1	Gasket-Housing
13	98-4635	1	Insert-Plate, Cam
14	105-9762	6	Washer
16	76-6190	1	Seal-Shaft
17	98-4640	6	Screw-Cap
20	120-1989	1	Relief Valve ASM

Ref.	Part Number	Qty.	Description
21	120-1989	1	Relief Valve ASM
22	98-4639	2	Bearing-Cone
23	98-4645	1	Plate-Cover
24	98-4644	1	Plate-Cover
26	76-6150	2	Pin-Dowel
27	76-6160	2	Capscrew
28	76-6170	2	Capscrew
29	120-5751	1	Key
30	94-3646	1	Key
37	74-9040	1	Coupler
39	104-4046	2	Bearing-Cup
40	100-3182	1	Shim Kit
41	100-3179	2	O-Ring
48	100-3180	1	Plate-Valve
50	74-9280	1	Plug ASM
50:1		1	O-Ring ■
51	74-9280	1	Plug ASM
51:1		1	O-Ring ■

● Not illustrated

■ Not serviced separately

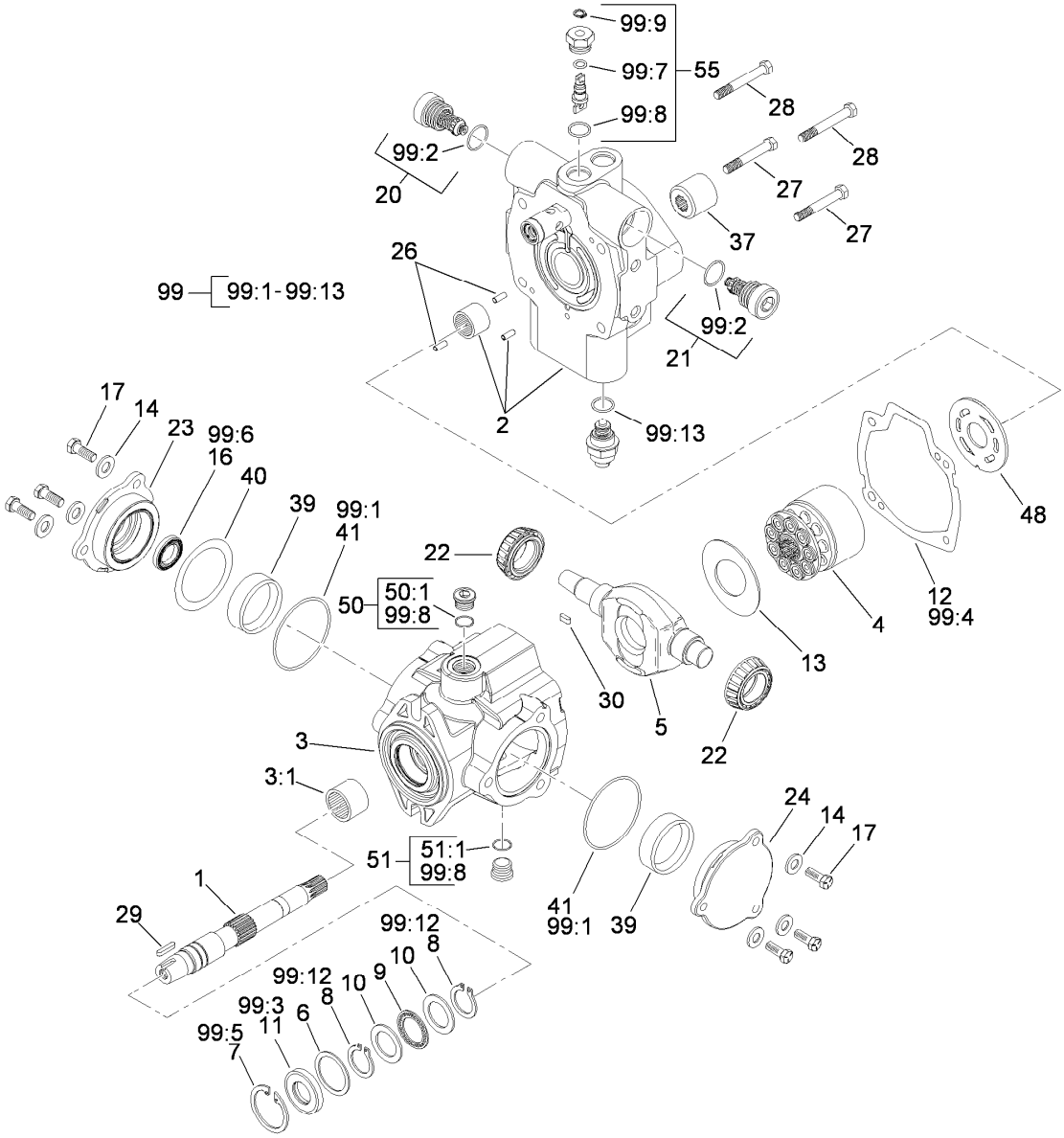

Hydraulic Pump Assembly No. 121-9557 (continued)

Ref.	Part Number	Qty.	Description
55	105-3811	1	Valve-Bypass
99	120-5754	1	Seal Kit
99:1		2	O-Ring ■
99:2		2	O-Ring ■
99:3		1	Seal-Shaft ■
99:4		1	Gasket ■
99:5		1	Ring-Retaining ■
99:6		1	Seal-Shaft ■
99:7		1	O-Ring ■

Ref.	Part Number	Qty.	Description
99:8		5	O-Ring ■
99:9		1	Ring-Retaining ■
99:10		1	O-Ring (Not Used For This Configuration) ● ■
99:11		1	O Ring-Molded (Not Used For This Configuration) ● ■
99:12		2	Ring-Retaining ■
99:13		1	O-Ring ■

● Not illustrated

■ Not serviced separately

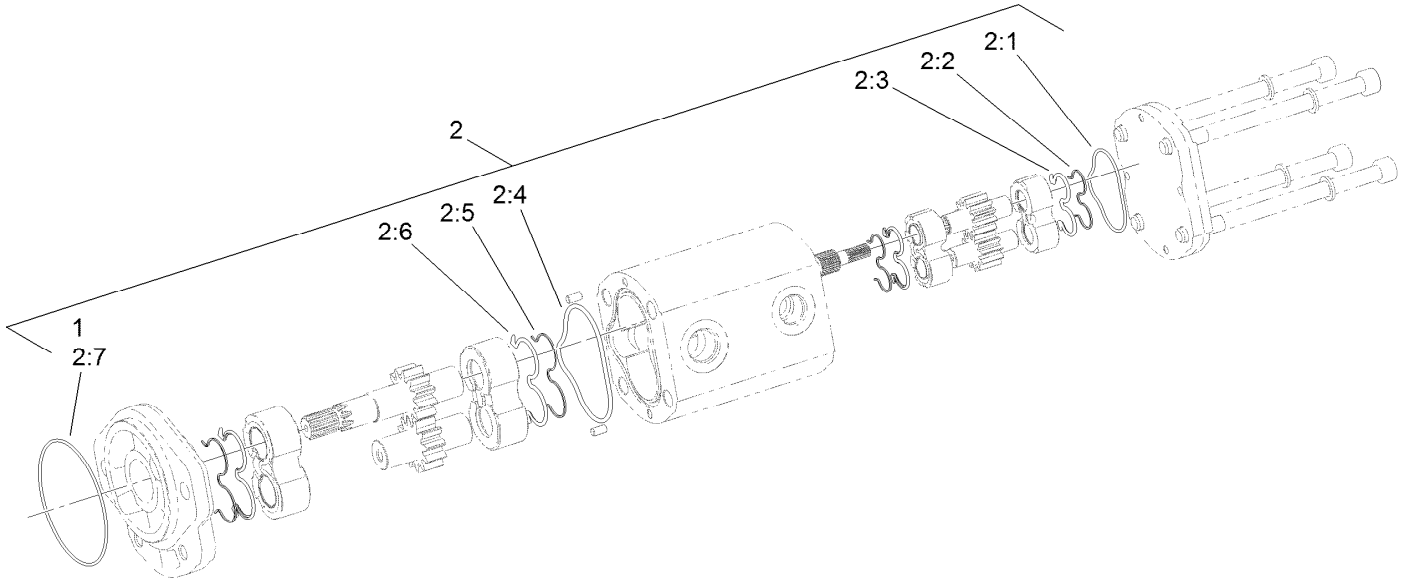

Hydraulic Gear Pump Assembly No. 114-9956

Ref.	*Part Number*	*Qty.*	*Description*
1	353-949	1	O-Ring
2	119-7134	1	Kit-Seal
2:1		1	O-Ring ●
2:2		2	Seal-Extrusion, Anti ●
2:3		2	Seal-Backup ●
2:4		1	O-Ring ●
2:5		2	Seal-Extrusion, Anti ●
2:6		2	Seal-Backup ●
2:7		1	O-Ring ●

● Not serviced separately

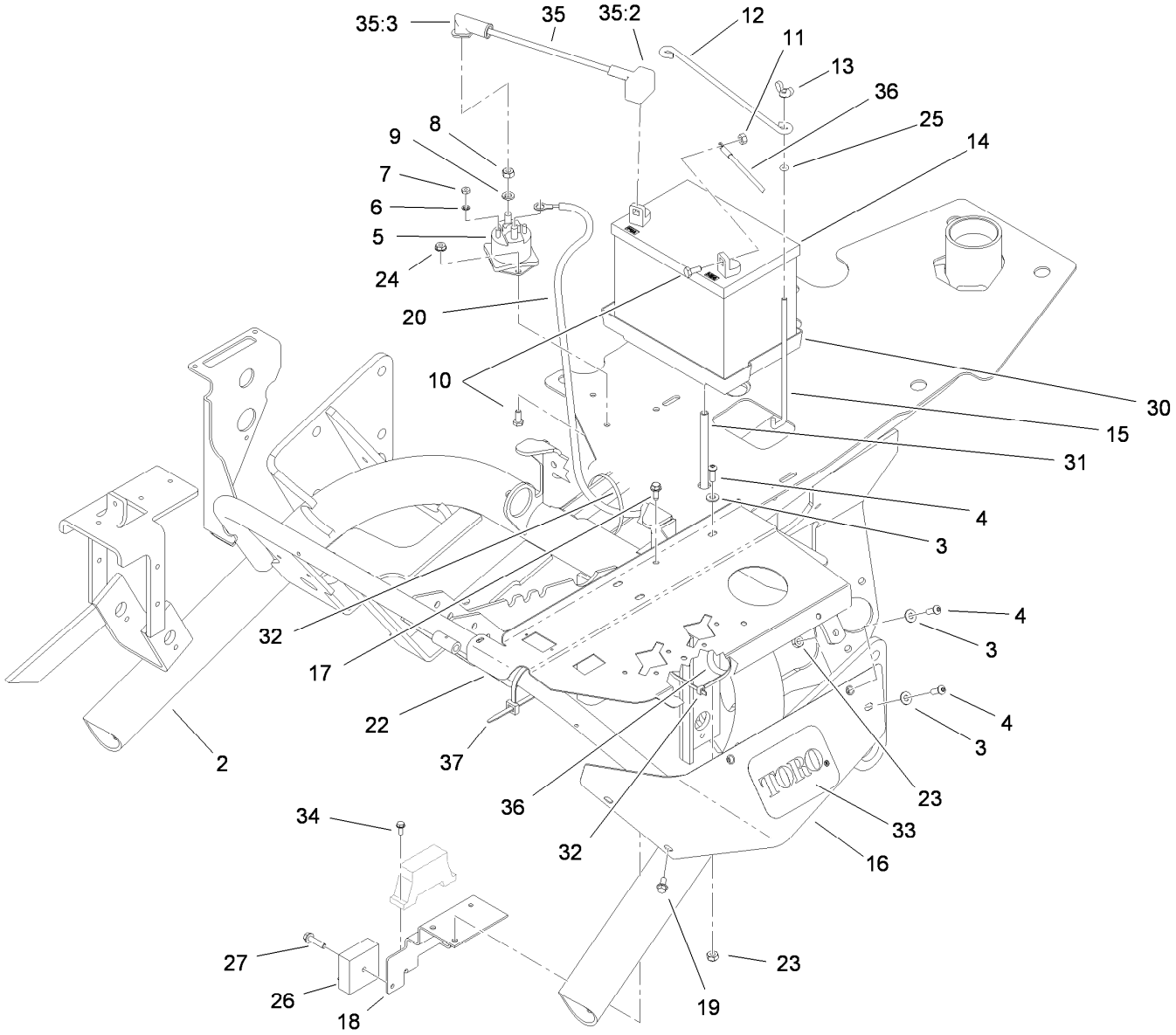

Frame and Battery Assembly

Ref.	Part Number	Qty.	Description
2	112-0217-01	1	Frame
3	3256-22	4	Washer-Flat
4	3274-69	4	Screw-HSBH
5	28-4210	1	Solenoid
6	3254-1	2	Washer-Lock, Int
7	3219-14	2	Nut-Hex
8	3218-13	2	Nut-Jam, Brass
9	3253-4	2	Washer-Lock
10	321-3	4	Screw-HH
11	3217-5	2	Nut-Hex
12	100-6434	1	Rod-Hold Down, Battery
13	32103-22	2	Nut-Wing
14	104-8162	1	Battery
15	100-6435	2	Post-Battery
16	105-5411	1	Shield-Cover, Valve
17	32144-10	1	Screw-HWH
18	105-4310-01	1	Bracket-Fuse
19	32104-116	2	Screw-HWHTF

Ref.	Part Number	Qty.	Description
20	98-2161	1	Cable-Battery, Positive
22	105-0499-03	1	Panel-Control
23	3296-16	2	Nut-Lock, NI
24	32149-2	2	Nut-Keps
25	237-143	2	O-Ring
26	92-2538	1	Module-Timer
27	32144-86	1	Screw-HWHTF
30	106948	1	Tray-Battery
31	104-2061	1	Tube-Drain, Battery
32	3290-379	2	Tie-Cable
33	94-2579	1	Decal
34	32144-1	2	Screw-Taptite
35	83-2420	1	Positive Cable ASM
35:2	28-8080	1	Boot-Terminal
35:3	83-2430	1	Boot-Terminal
36	112-0276	1	Wire-Ground, Engine
37	3290-378	1	Tie-Cable

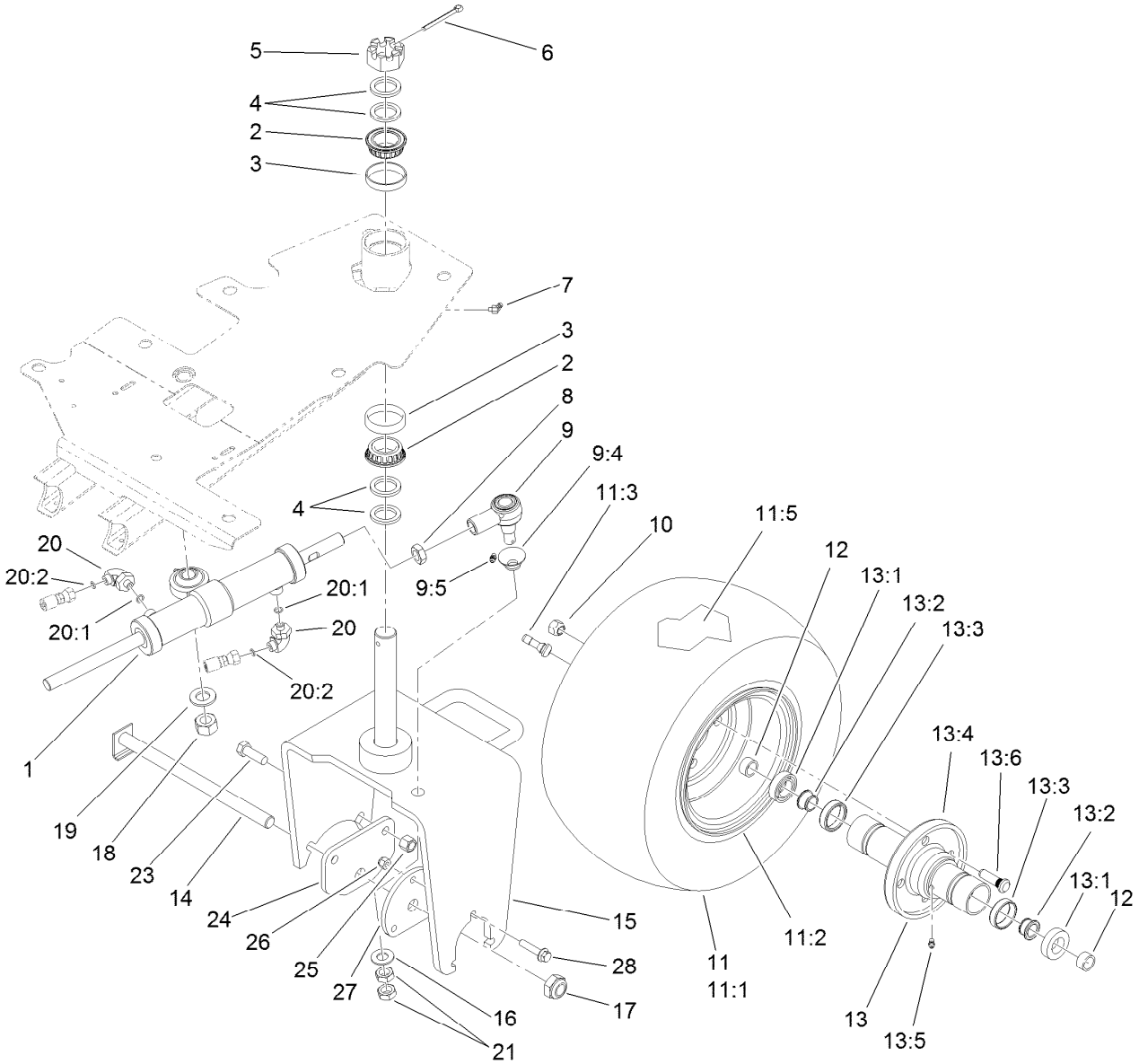

Rear Wheel Assembly

Ref.	Part Number	Qty.	Description
1	112-0297	1	Steering Cylinder ASM
2	115-9472	2	Bearing-Cone And Seal
3	115-9471	2	Bearing-Cup
4	18-6320	4	Washer-Steering
5	32136-9	1	Nut-Hex, Slotted
6	3272-37	1	Pin-Cotter
7	302-11	1	Fitting-Lube, 45 DEG
8	84-5300	1	Nut-Jam
9	107-2553	1	Rod End ASM
9:4	106-6896	1	Seal
9:5	302-5	1	Fitting-Grease
10	242-50	4	Nut-Lug
11		1	Wheel And Tire ASM ●
11:1	28-3680	1	Tire
11:2	217-60	1	Rim
11:3	232-27	1	Stem-Valve
11:5	232-37	1	Tube
12	74-3730	2	Spacer-Spindle, Rear

Ref.	Part Number	Qty.	Description
13	72-9710	1	Hub-Tire
13:1	253-111	2	Seal-Oil
13:2	254-78	2	Bearing-Cone
13:3	254-79	2	Bearing-Roller, Cup
13:4	75-9440	1	Hub ASM
13:5	302-11	1	Fitting-Lube, 45 DEG
13:6	10-6830	4	Stud-Type, Drive
14	5-3934	1	Bolt-Caster
15	112-0285-01	1	Fork-Castor
16	3256-27	1	Washer-Flat
17	3296-67	1	Nut-Lock, NI
18	3217-12	1	Nut-Hex
19	3256-28	1	Washer-Flat
20	340-132	2	Fitting-Elbow, 90 DEG
20:1	237-78	1	O-Ring
20:2	237-21	1	O-Ring
21	3220-6	2	Nut-Jam
23	325-6	2	Screw-HH

● Not serviced separately

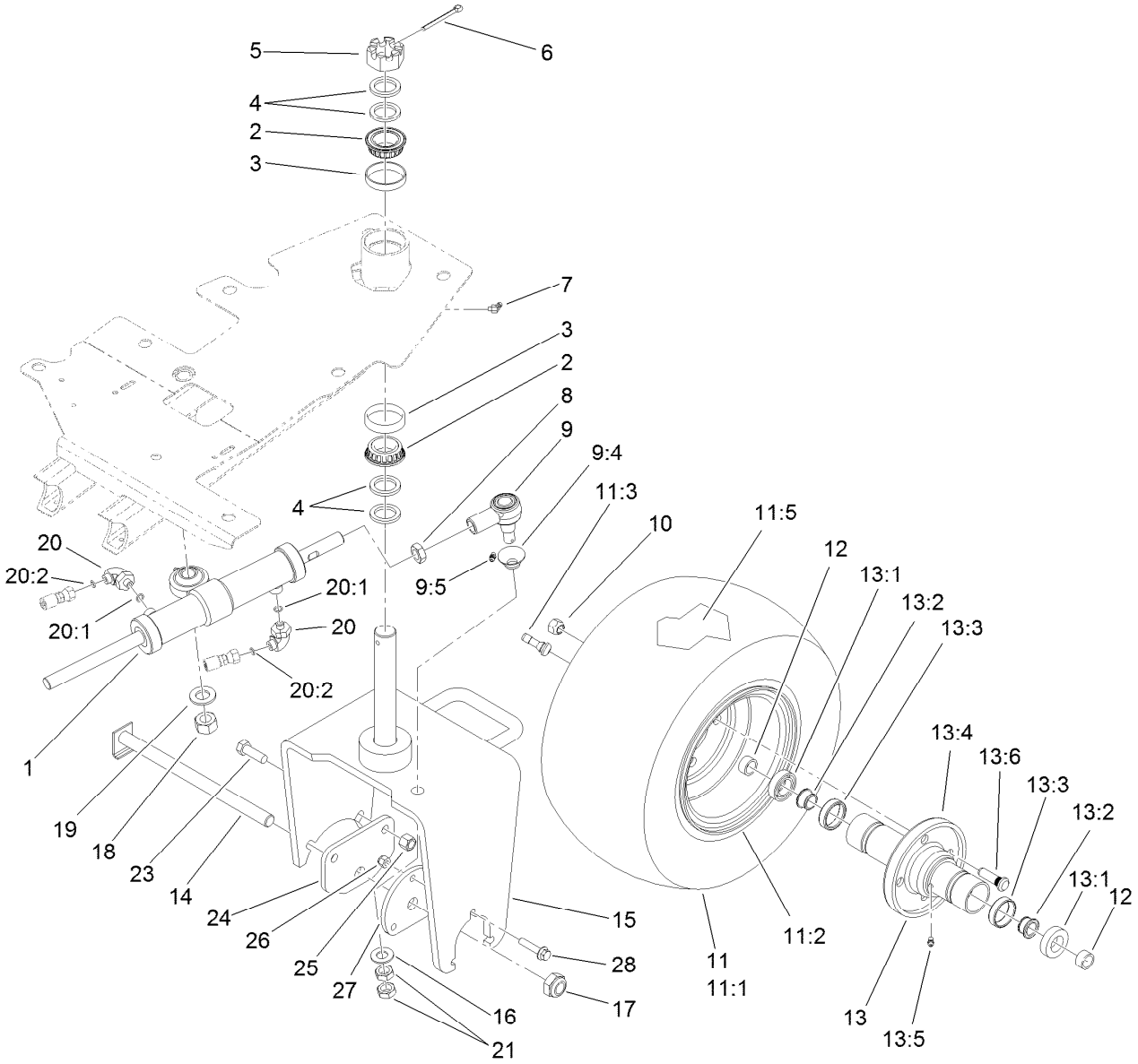

Rear Wheel Assembly (continued)

Ref.	Part Number	Qty.	Description
24	99-1485-01	1	Plate-Adapter, Motor
25	3296-23	2	Nut-Lock, NI
26	3296-39	3	Nut-Lock, NI
27	99-1486-01	1	Plate-Adapter
28	114-4681	3	Screw-HHF

● Not serviced separately

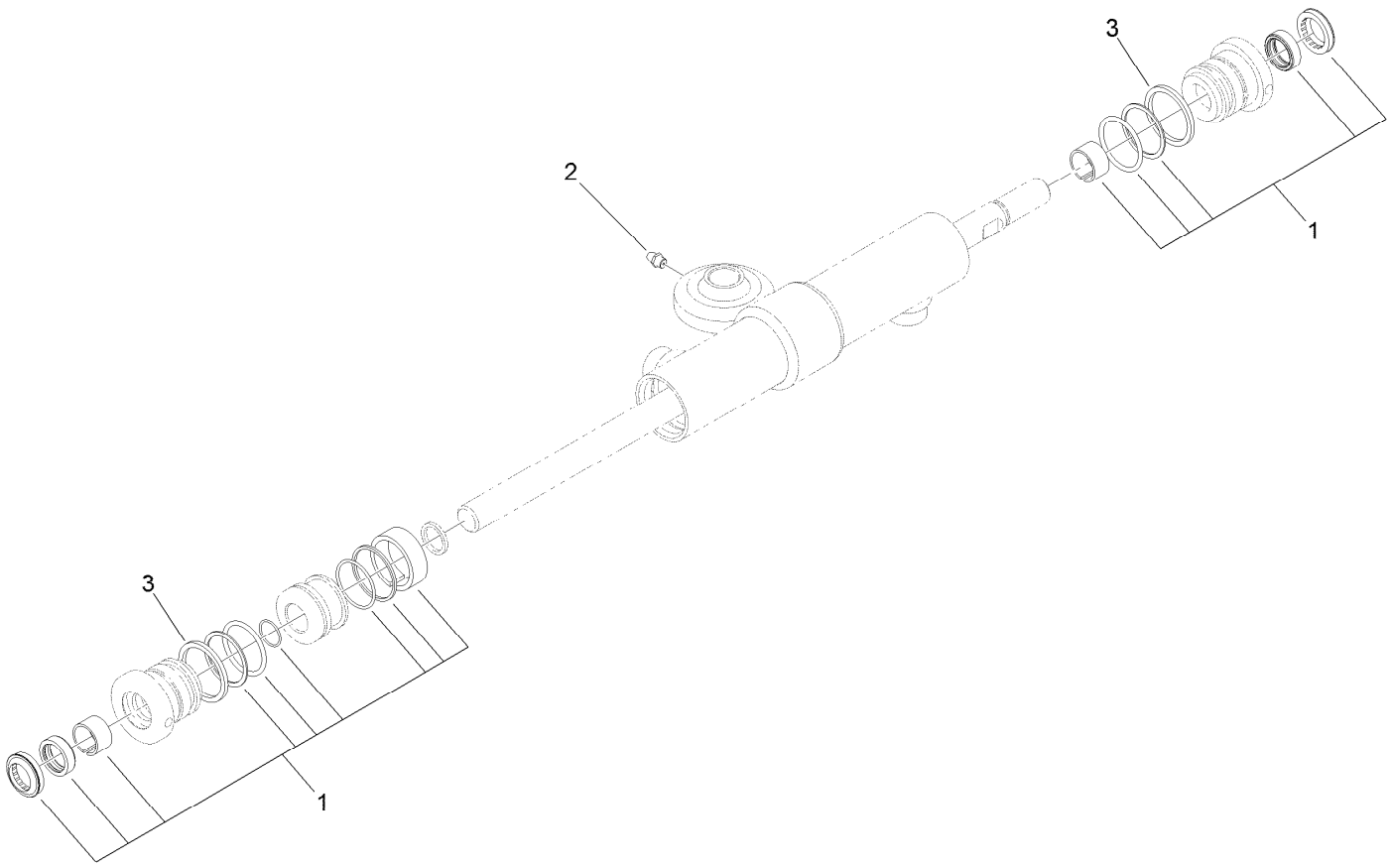

Hydraulic Cylinder Assembly No. 112-0297

Ref.	*Part Number*	*Qty.*	*Description*
1	112-9170	1	Seal Kit
2	302-5	1	Fitting-Grease
3	117-9548	2	Ring-Retaining

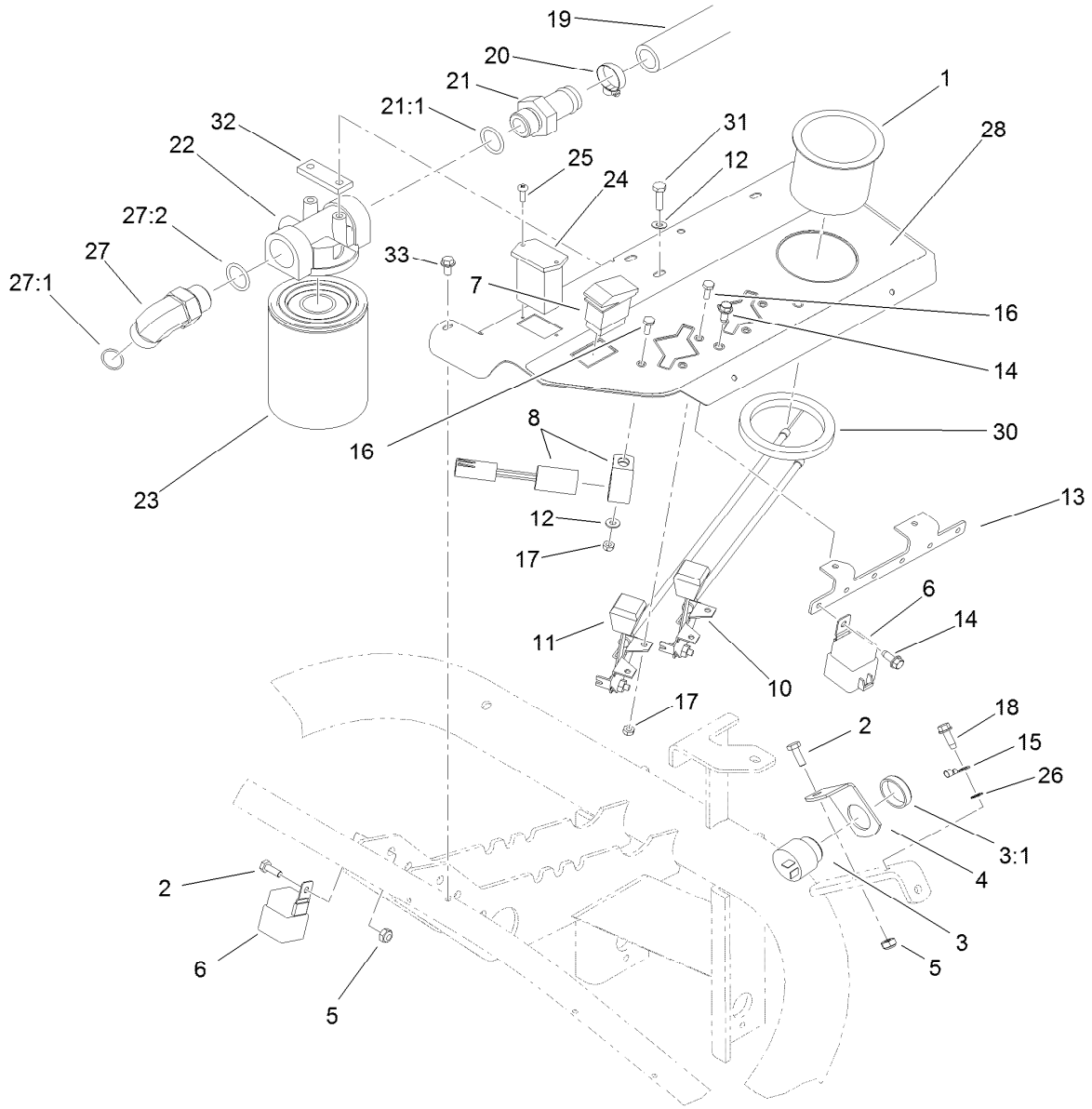

Control Panel Assembly

Ref.	Part Number	Qty.	Description
1	94-1410	1	Holder-Can, Beverage
2	321-4	2	Screw-HH
3	80-9330	1	Audio Alarm ASM
3:1	104-5107	1	Nut-Plastic, Knurled
4	83-1530	1	Bracket-Support, Buzzer
5	3296-16	2	Nut-Lock, NI
6	99-7430	7	Relay-Mini
7	105-4320	1	Switch
8	83-2280	1	Timer-Delay
10	83-0040	1	Control-Choke
11	83-0030	1	Control-Throttle
12	3256-22	3	Washer-Flat
13	105-4306-03	1	Bracket-Relay
14	32144-10	8	Screw-HWH
15	83-1150	1	Engine Ground Wire ASM
16	3290-134	5	Screw
17	3296-12	5	Nut-Lock, NI
18	32104-95	1	Screw-HWH

Ref.	Part Number	Qty.	Description
19	105-5410	1	Hose-HYD
20	2412-34	1	Clamp-Hose
21	99-3017	1	Fitting
21:1	237-81	1	O-Ring
22	92-5821	1	Head-Filter
23	107-9531	1	Filter-Oil, HYD
24	75-6820	1	Hourmeter
25	32144-18	2	Screw-HWH
26	3255-7	1	Washer-Lock/EXT
27	340-142	1	Fitting-Elbow, 90 DEG
27:1	237-58	1	O-Ring
27:2	237-81	1	O-Ring
28	105-5471	1	Decal-Panel, Left Control
30	104-1476	1	Ring-Rubber
31	321-5	2	Screw-HH
32	105-4309	1	Plate-Filter
33	32104-116	1	Screw-HWHTF

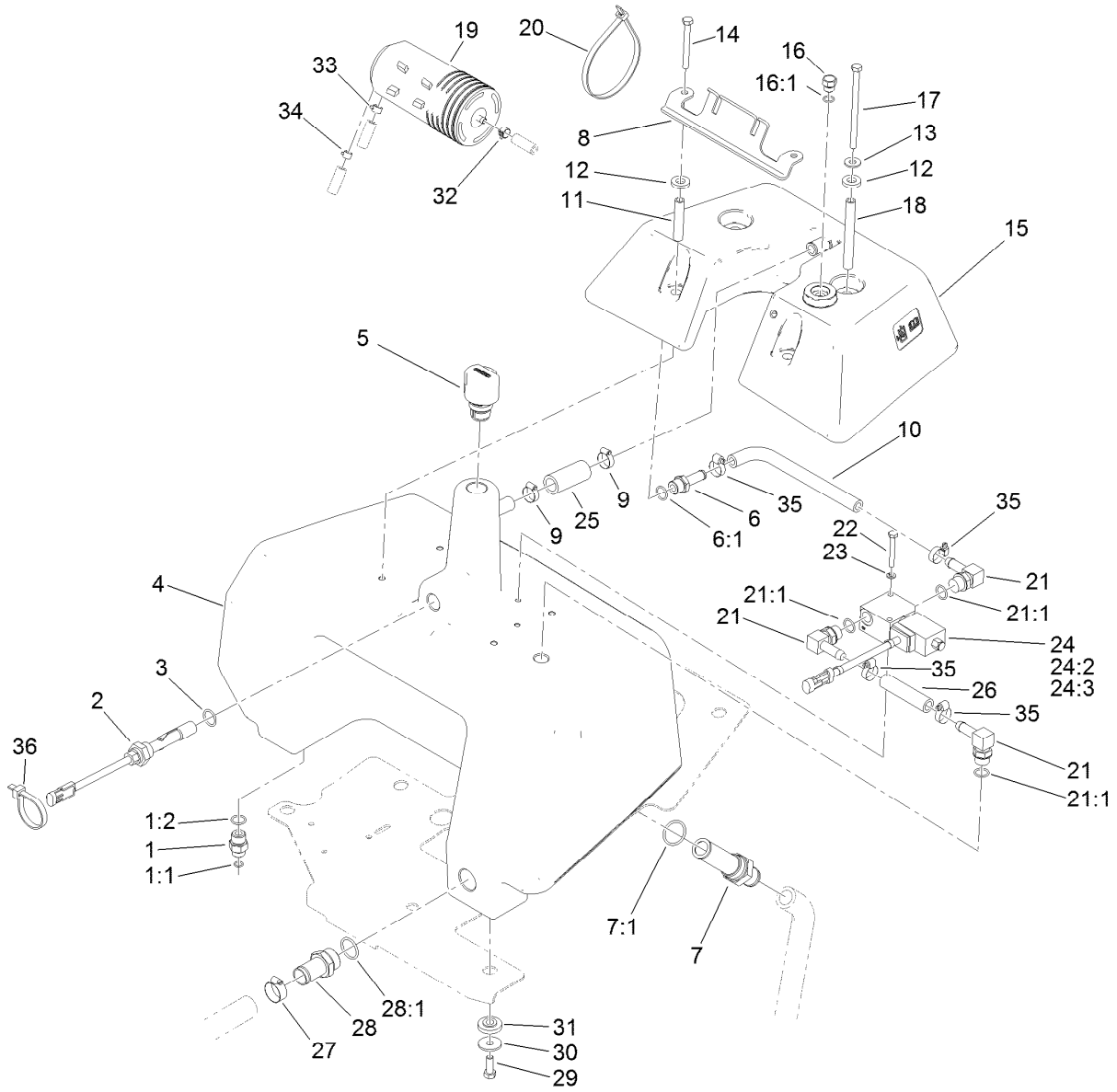

Hydraulic Reservoir and Leak Detector Assembly

Ref.	Part Number	Qty.	Description
1	340-3	1	Fitting-Straight
1:1	237-22	1	O-Ring
1:2	237-79	1	O-Ring
2	83-1450	1	Sensor-Level, Oil
3	237-80	1	O-Ring
4	119-3562	1	Tank-Hydraulic
5	115-9793	1	Breather
6	354-121	1	Fitting-STR
6:1	237-79	1	O-Ring
7	112-0211	1	Strainer Fitting ASM
7:1	237-146	1	O-Ring
8	121-2564	1	Bracket
9	2412-141	2	Clamp-Drive, Worm
10	83-2070	1	Hose-Valve
11	83-1550	2	Spacer-Tube, Short
12	83-1470	4	Washer-Neoprene
13	3256-71	2	Washer-Flat
14	322-14	2	Screw-HH
15	121-2565	1	Tank-Detector, Leak
16	353-508	1	Plug-HH
16:1	237-42	1	O-Ring

Ref.	Part Number	Qty.	Description
17	322-29	2	Screw-HH
18	83-1560	2	Spacer-Tube, Long
19	117-1221	1	Canister-Carbon, 800Cc
20	103-2446	2	Tie-Cable
21	354-120	3	Fitting-Elbow, 90
21:1	237-79	1	O-Ring
22	321-11	2	Screw-HH
23	3253-3	2	Washer-Lock
24	83-1460	1	Solenoid Valve ASM
24:2	83-2000	1	Spool-Valve
24:3	83-2010	1	Coil ASM
25	110-3998	1	Hose-Overflow
26	83-2080	1	Hose-Valve, Tank
27	2412-34	1	Clamp-Hose
28	83-0870	1	Fitting-Hose, Barbed
28:1	237-177	1	O-Ring
29	323-6	3	Screw-HH
30	93-4637	3	Washer-Flat
31	240-11	3	Bushing-Flange
32	92-2379	1	Clamp-Hose
33	2412-98	1	Clamp-Hose

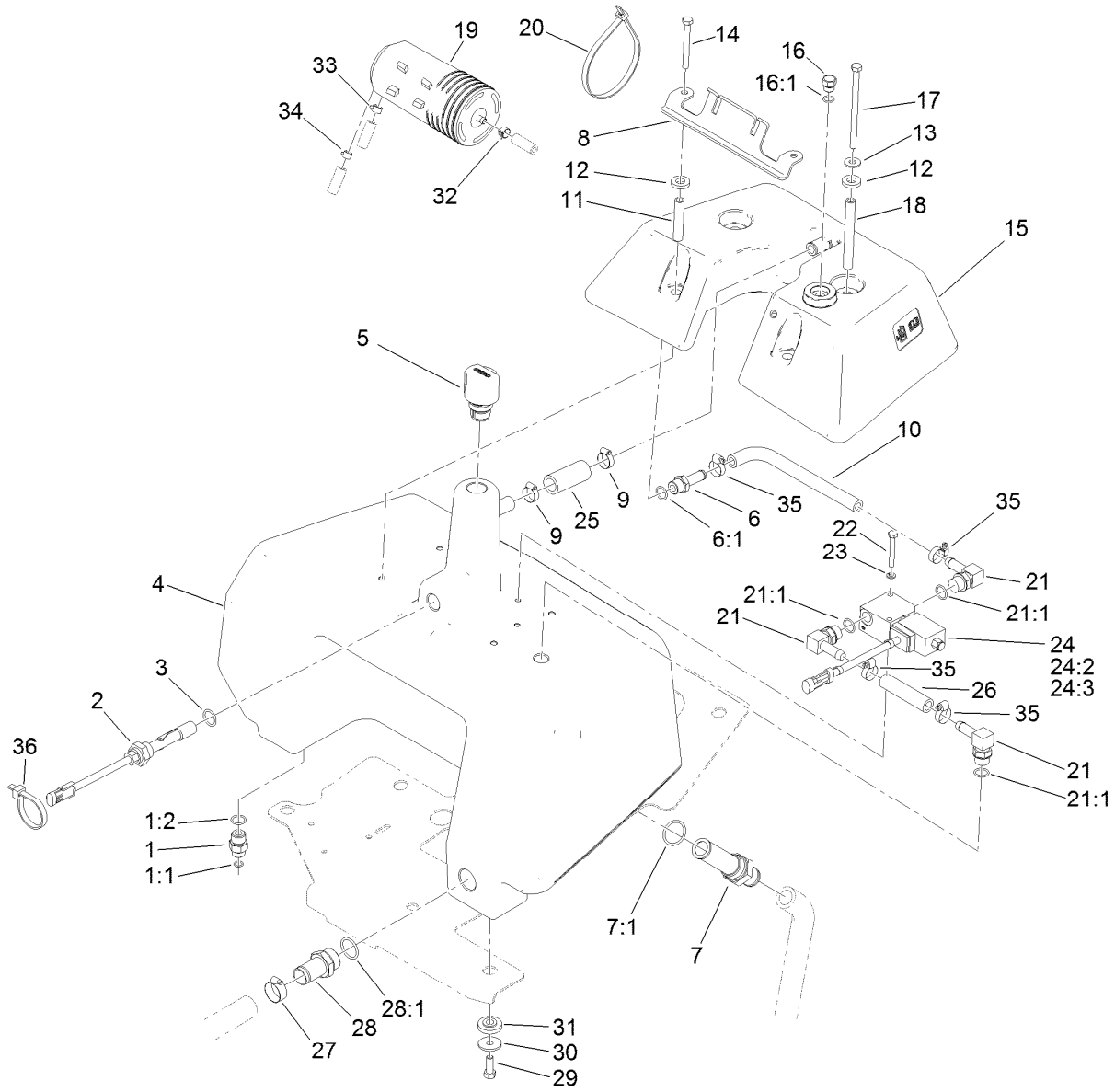

Hydraulic Reservoir and Leak Detector Assembly (continued)

Ref.	Part Number	Qty.	Description
34	2412-80	1	Clamp-Hose
35	2412-36	4	Clamp-Hose
36	3290-378	1	Tie-Cable

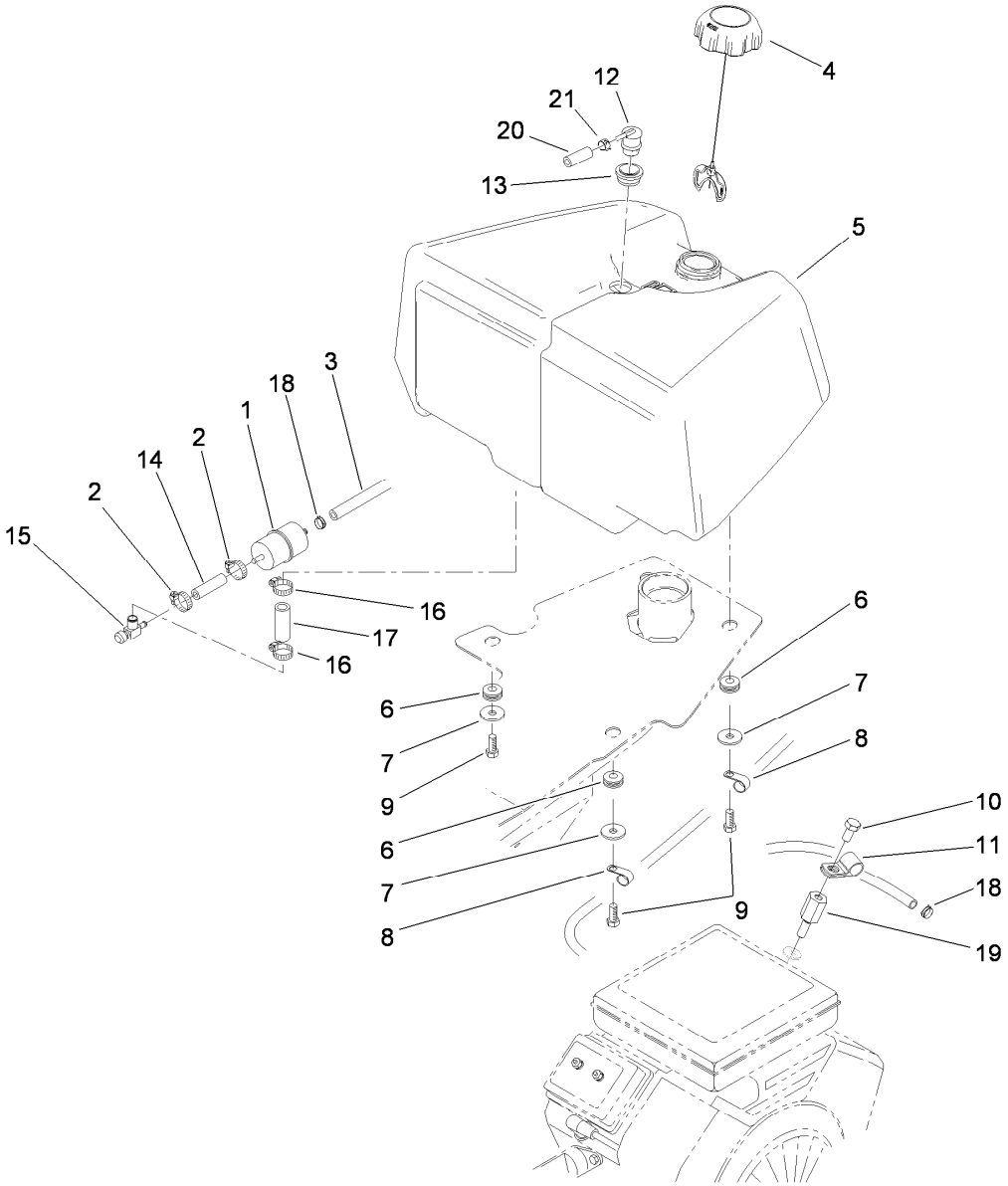

Fuel Tank Assembly

Ref.	Part Number	Qty.	Description
1	94-2690	1	Filter-Fuel
2	2412-108	2	Clamp-Worm
3	109-0275	1	Hose-Fuel
4	115-7788	1	Cap-Fuel
5	115-5387	1	Tank-Fuel
6	240-11	4	Bushing-Flange
7	93-4637	4	Washer-Flat
8	2412-41	3	Clamp-R
9	323-6	4	Screw-HH
10	33113-012	1	Screw-HH
11	2412-94	1	Clamp

Ref.	Part Number	Qty.	Description
12	119-3547	1	Valve-Vent, Fuel
13	114-0284	1	Grommet
14	109-0660	1	Hose-Fuel
15	83-1390	1	Valve-Shut-Off, Fuel
16	2412-36	2	Clamp-Hose
17	106-1128	1	Hose-Fuel
18	2412-98	2	Clamp-Hose
19	106-4616	1	Screw-Spacer
20	119-8149	1	Hose-Fuel
21	2412-80	1	Clamp-Hose

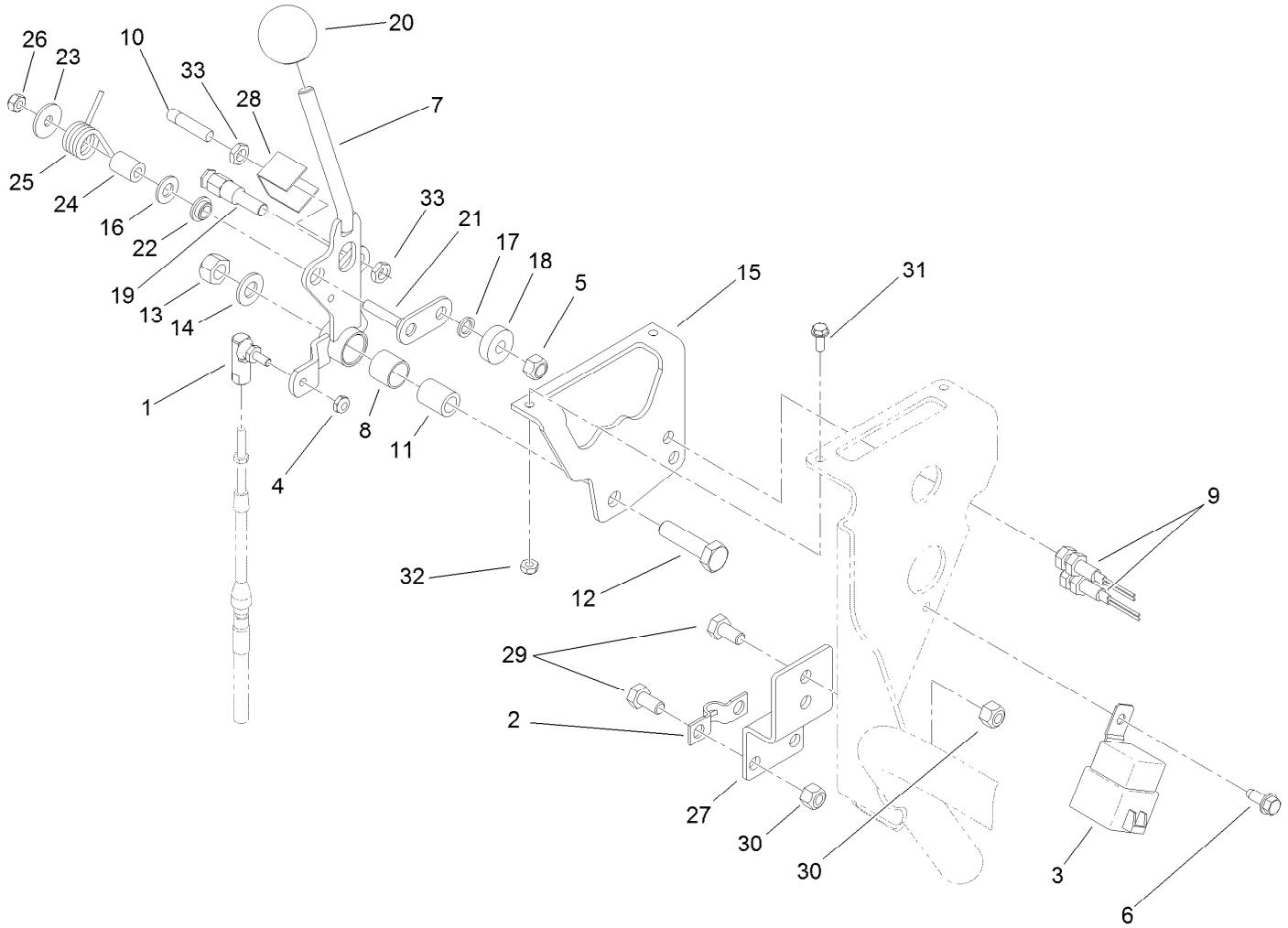

Speed Selector Lever Assembly

Ref.	Part Number	Qty.	Description
1	2411-38	1	Joint-Ball
2	93-2279	1	Clamp-Cable
3	99-7430	1	Relay-Mini
4	3296-27	1	Nut-Lock, NI
5	33024-00	1	Nut-Lock, NI
6	32144-10	1	Screw-HWH
7	94-9611	1	Handle
8	256-311	1	Bushing-Split
9	112-0278	2	Switch-Reed
10	120-5348	1	Actuator-Switch
11	94-1378	1	Tube-Pivot, Handle
12	33115-040	1	Screw-HH
13	33025-00	1	Nut-Lock, NI
14	3256-24	1	Washer-Flat
15	94-6398	1	Bracket-Traction
16	3256-23	1	Washer-Plain
17	75-5470	1	Spacer-Bearing
18	251-259	1	Bearing-Ball
19	94-9617	1	Pin-Spring
20	233-42	1	Knob
21	120-3198	1	Roller-Pivot
22	94-9619	1	Bushing
23	3256-67	1	Washer
24	94-9618	1	Spacer-Spring
25	94-9620	1	Spring-Torsion
26	33023-00	1	Nut-Lock
27	105-5417-03	1	Bracket-Cable, Shifter
28	106-6356	1	Shield-Switch
29	322-2	4	Screw-HH
30	3296-29	4	Nut-Lock, NI
31	3290-321	2	Screw-HWH
32	3296-12	2	Nut-Lock, NI
33	117-4059	2	Nut-Hex

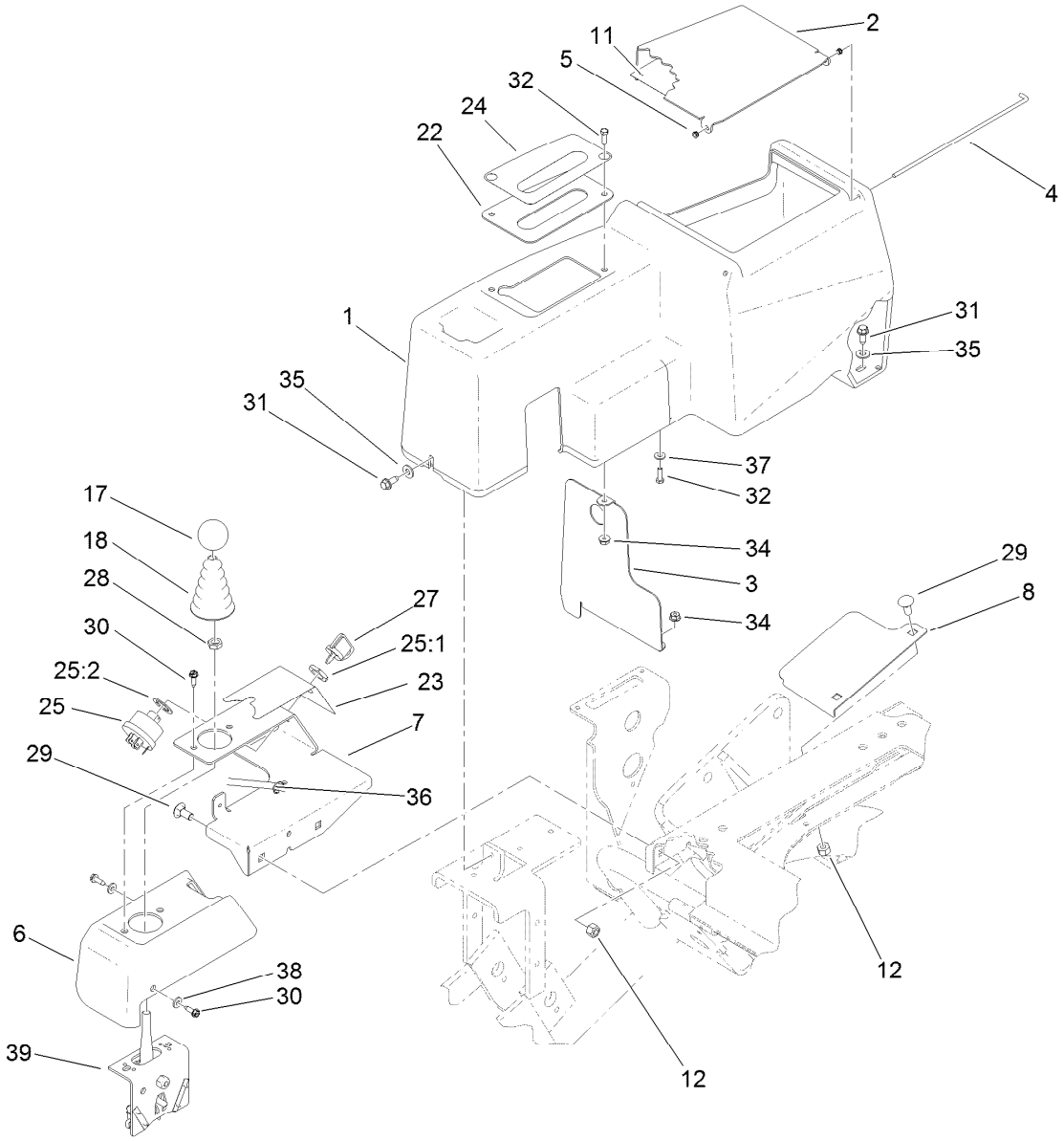

Joystick and Console Assembly

Ref.	Part Number	Qty.	Description
1	105-8250	1	Console
2	105-8254-03	1	Lid-Console
3	105-8255-03	1	Baffle-Console
4	105-8256	1	Rod-Hinge
5	105-8283	2	Bushing
6	105-8251	1	Pod
7	105-8252-03	1	Bracket-Pod
8	105-8284-03	1	Shield-Valve
11	115-8156	1	Decal-Speed, Clip
12	3296-29	4	Nut-Lock, NI
17	233-42	1	Knob
18	93-5961	1	Boot-Lever
22	105-8280-03	1	Plate-Console
23	105-8305	1	Decal-Panel, Control
24	105-8306	1	Decal-Selector, Speed

Ref.	Part Number	Qty.	Description
25	104-2541	1	Ignition Switch ASM
25:1	218-461	1	Nut-HH
25:2	3254-5	1	Washer-Lock
27	63-8360	2	Key-Ignition
28	3218-3	1	Nut-Jam
29	3230-1	4	Bolt-CARR
30	32144-19	4	Screw-SHWH
31	32144-10	3	Screw-HWH
32	3290-134	4	Screw
34	3290-148	4	Nut-HF
35	3256-22	3	Washer-Flat
36	3290-378	1	Tie-Cable
37	3256-77	2	Washer-Flat
38	3256-14	2	Washer-Flat
39	120-5280	1	Bracket-Joystick

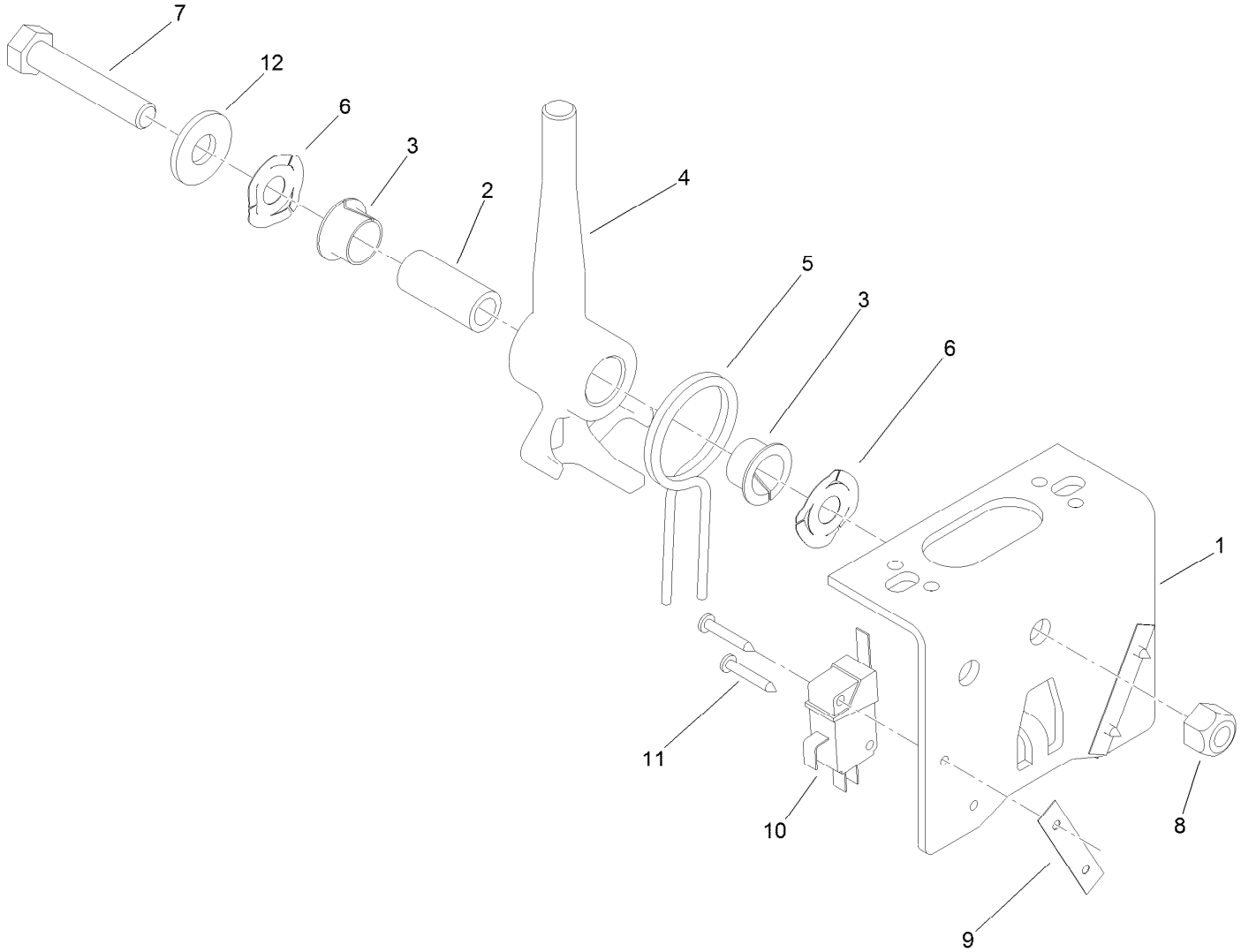

Joystick Bracket Assembly No. 120-5280

Ref.	*Part Number*	*Qty.*	*Description*
1	115-5357-03	1	Bracket-Joystick
2	106-4192	1	Spacer
3	93-5547	2	Bushing-Nylon
4	119-3540	1	Hub-Pivot, Joystick
5	105-8289	1	Spring-Torsion
6	106-4193	2	Washer-Finger, Spring
7	322-9	1	Screw-HH
8	3296-29	1	Nut-Lock, NI
9	3290-354	2	Nut-Speed
10	108-6496	2	Switch (W/Boot)
11	95-3003	4	Screw-PPHTF
12	3256-3	1	Washer-Flat

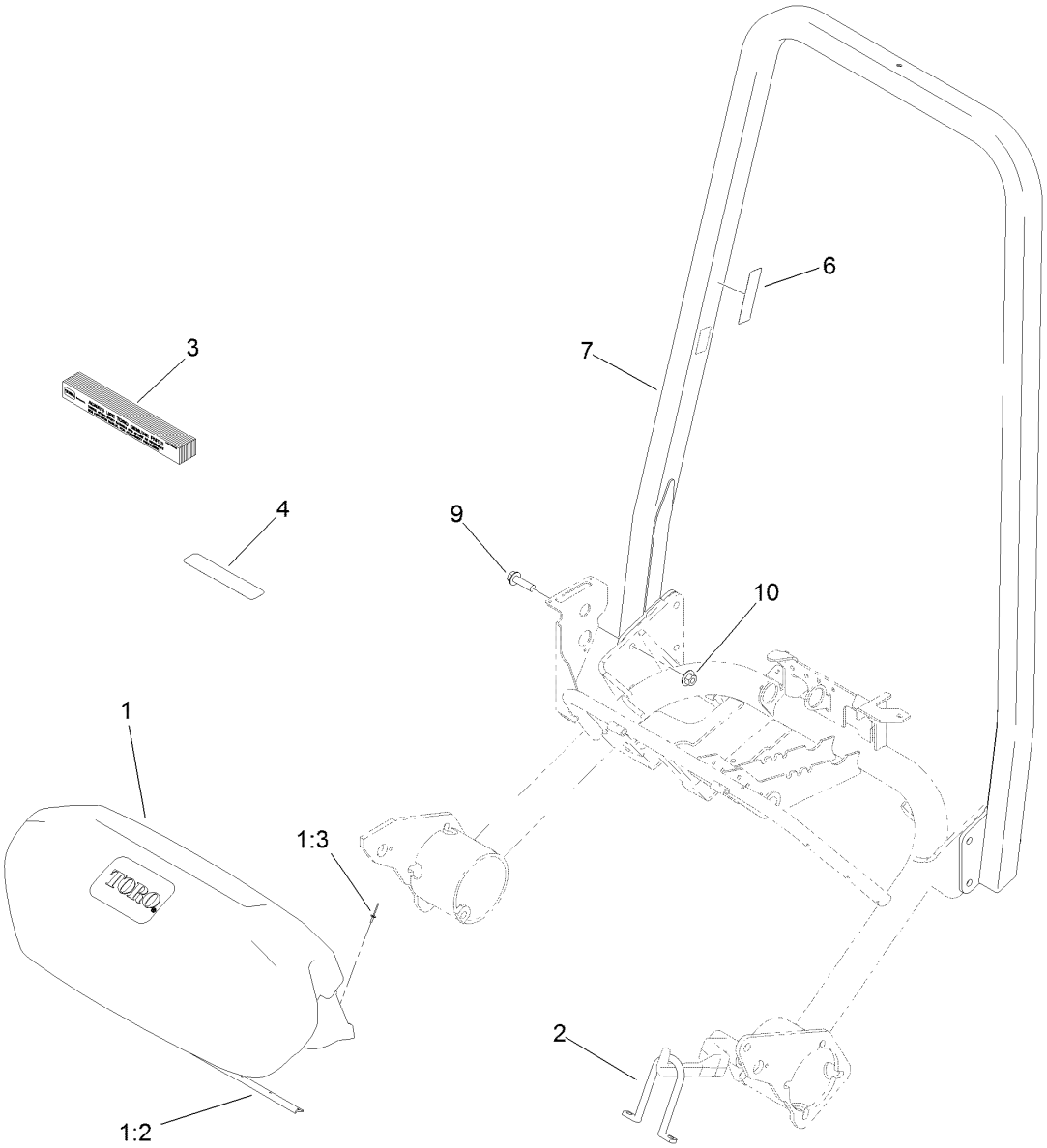

Grass Basket and Roll-Over Protection System Assembly

Ref.	*Part Number*	*Qty.*	*Description*
1	108-8642	3	Grass Basket ASM
1:2	104-2607	1	Strip-Basket
1:3	3290-382	8	Rivet-Pop
2	105-5740	3	Hook-Lift
3	125-5610	1	Paper-Reel, Toro (10 Pack)
4	125-5611	1	Shim-Reel, Toro (0.002In)
6	115-8226	1	Decal-ROPS
7	105-8314	1	ROPS ASM
9	3234-22	6	Screw-HHF
10	32128-52	6	Nut-Lock, Flange

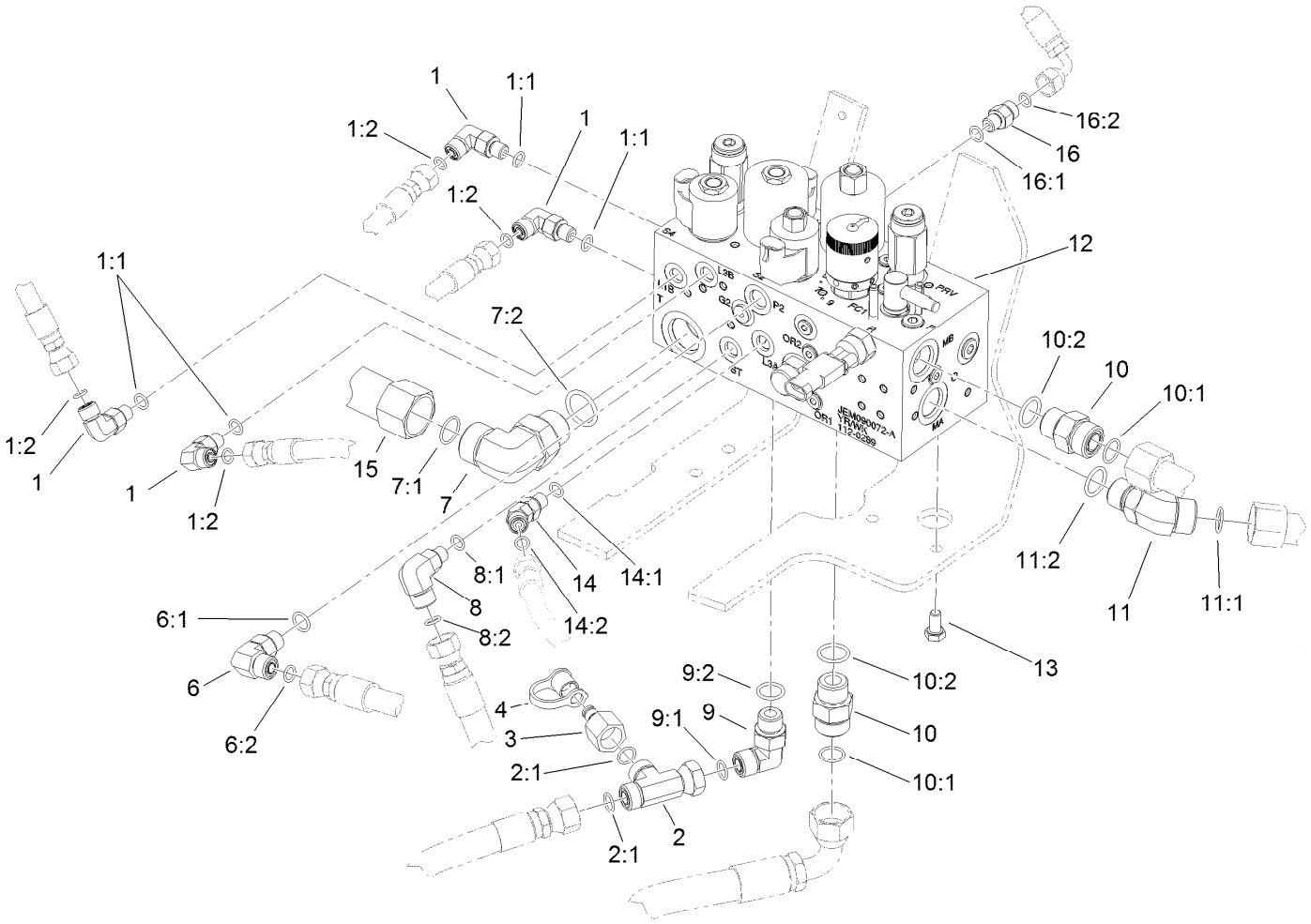

Hydraulic Manifold Assembly

Ref.	Part Number	Qty.	Description
1	340-132	4	Fitting-Elbow, 90 DEG
1:1	237-78	1	O-Ring
1:2	237-21	1	O-Ring
2	340-104	1	Fitting-Tee
2:1	237-30	2	O-Ring
3	100-5616	1	Fitting
4	354-79	1	Cap-Dust
6	340-77	1	Fitting-Elbow, 90 DEG
6:1	237-22	1	O-Ring
6:2	237-42	1	O-Ring
7	340-142	1	Fitting-Elbow, 90 DEG
7:1	237-58	1	O-Ring
7:2	237-81	1	O-Ring
8	340-97	1	Fitting-Elbow, 90 DEG
8:1	237-22	1	O-Ring
8:2	237-78	1	O-Ring
9	340-98	1	Fitting-Elbow, 90 DEG
9:1	237-79	1	O-Ring

Ref.	Part Number	Qty.	Description
9:2	237-30	1	O-Ring
10	340-7	2	Fitting-Straight
10:1	237-65	1	O-Ring
10:2	237-80	1	O-Ring
11	340-14	1	Fitting-HYD, 45 DEG
11:1	237-65	1	O-Ring
11:2	237-80	1	O-Ring
12	112-0289	1	Manifold ASM (With Backlap)
13	33114-016	2	Screw-HH
14	340-103	1	Fitting-HYD, 45 DEG
14:1	237-78	1	O-Ring
14:2	237-21	1	O-Ring
15	105-5460	1	Tube-HYD
16	340-92	1	Fitting-Straight
16:1	237-78	1	O-Ring
16:2	237-21	1	O-Ring

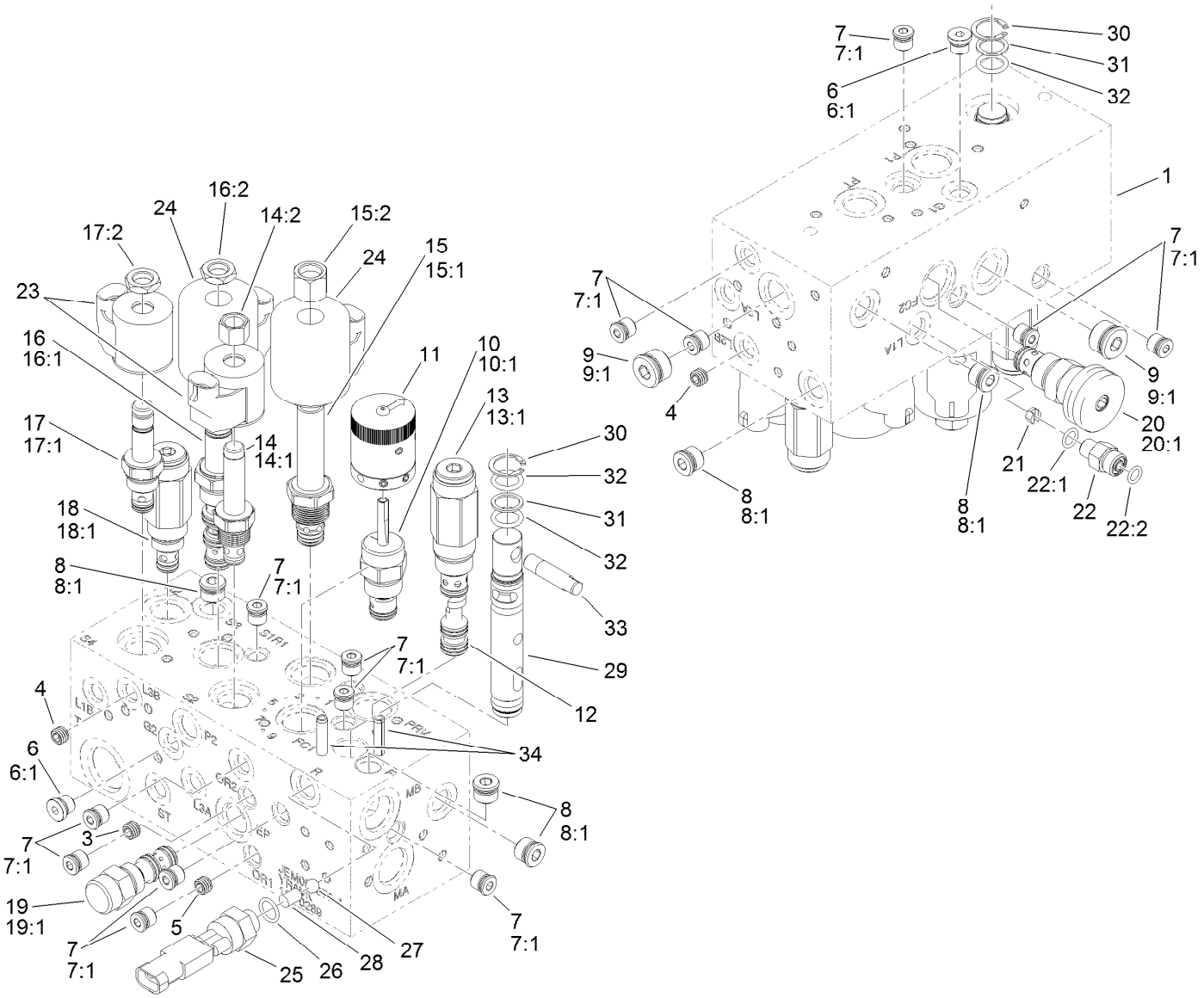

Hydraulic Manifold Assembly No. 112-0289

Ref.	Part Number	Qty.	Description
1		1	Body-Manifold ●
3	112-9202	1	Orifice-Flow, Control (.060)
4	110-8887	2	Plug-Orifice (0.055)
5	112-9203	1	Orifice-Control, Flow (.013)
6	353-990	2	Plug ASM
6:1	237-78	1	O-Ring
7	106-1025	13	Plug-HYD
7:1	237-78	1	O-Ring
8	106-1026	5	Plug-HYD
8:1	237-42	1	O-Ring
9	106-1027	2	Plug
9:1	237-79	1	O-Ring
10	110-8769	1	Valve-Control, Manual Flow
10:1	110-2633	1	Seal Kit
11	110-8767	1	Rotary Handle ASM
12	119-3506	1	Piston-Pilot
13	112-9205	1	Valve-Relief
13:1	105-9159	1	Seal Kit

Ref.	Part Number	Qty.	Description
14	107-7517	1	Valve-Solenoid
14:1	105-9156	1	Seal Kit
14:2	107-7812	1	Nut-Solenoid
15	119-4137	1	Valve-Relief, Solenoid
15:1	110-6316	1	Seal Kit
15:2	130-8180	1	Nut-Coil (9/16-24 Unef-2B)
16	110-8906	1	Valve-Solenoid
16:1	110-8908	1	Spool Valve Seal Kit
16:2	110-2634	1	Nut-Coil
17	112-9206	1	Solenoid Valve ASM
17:1	105-9156	1	Seal Kit
17:2	110-2634	1	Nut-Coil
18	133-8873	1	Valve-Relief
18:1	105-9156	1	Seal Kit
19	110-8988	1	Element-Logic
19:1	110-8773	1	Seal Kit
20	119-4136	1	Control-Flow
20:1	110-2633	1	Seal Kit

● Not serviced separately

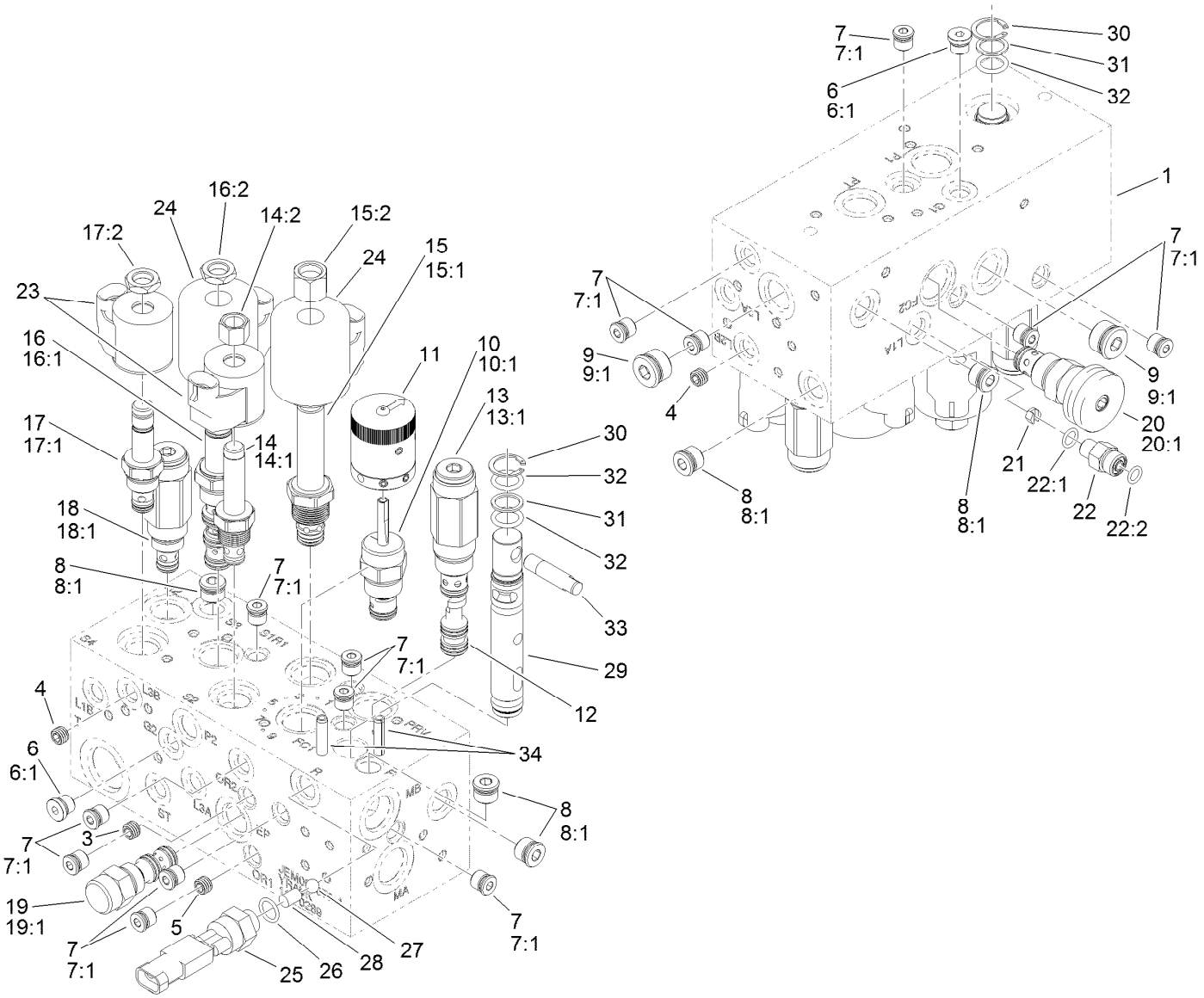

Hydraulic Manifold Assembly No. 112-0289 (continued)

Ref.	Part Number	Qty.	Description
21	114-4682	1	Orifice-Flow Control (.030)
22	340-92	1	Fitting-Straight
22:1	237-78	1	O-Ring
22:2	237-21	1	O-Ring
23	105-9333	2	Coil-12Vdc
24	110-2630	2	Coil-12Vdc
25	72-4320	1	Switch-Ball
26	110-8757	1	O-Ring

Ref.	Part Number	Qty.	Description
27	110-8762	1	Ball-Chrome
28	112-6533	1	Pin-Dowel
29	112-6536	1	Spool
30	112-6532	2	Ring-Retaining
31	112-6534	2	Ring-Back Up
32	117-4606	3	O-Ring
33	110-8758	1	Handle-Spool
34	112-6531	2	Pin-Spring

● Not serviced separately

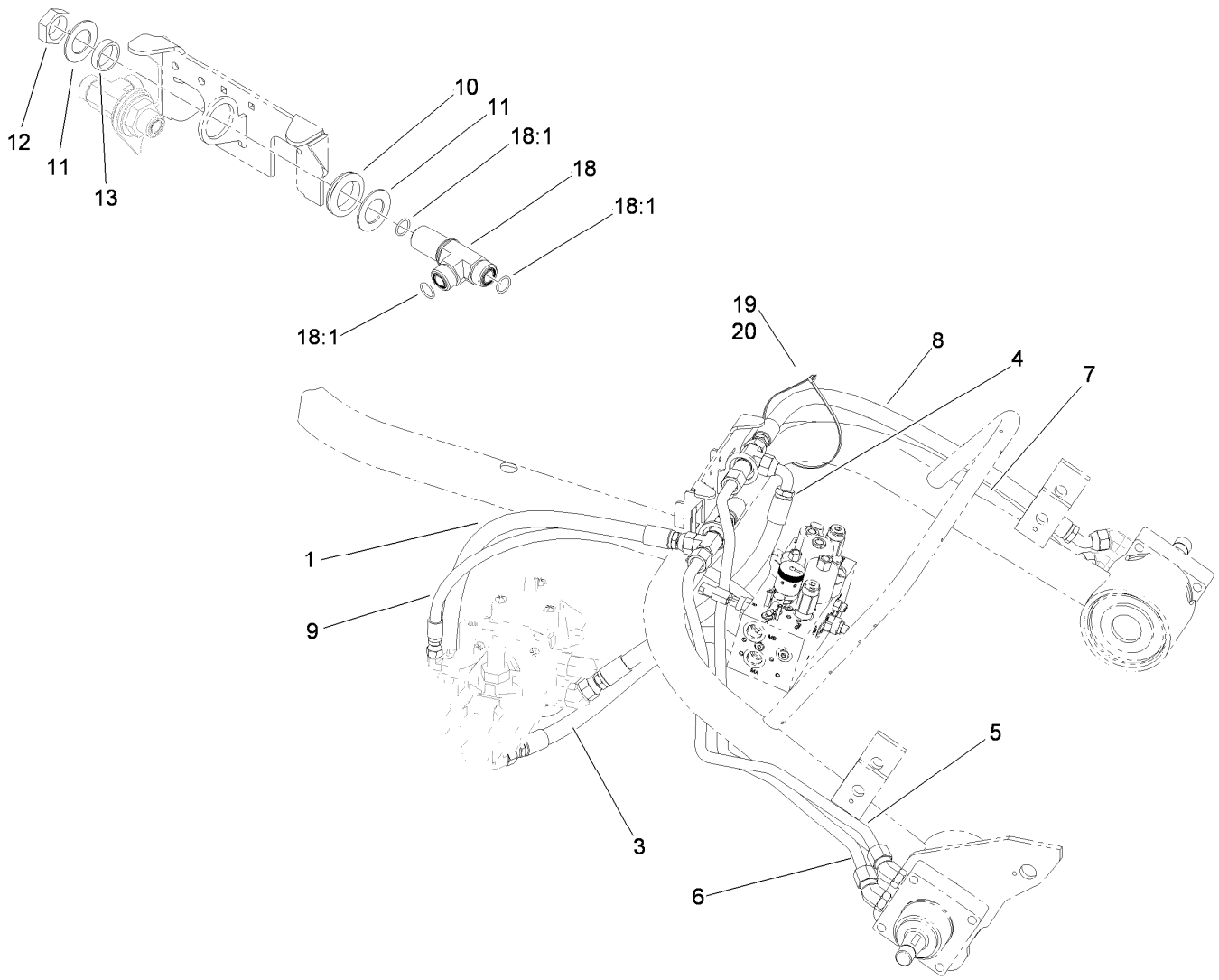

Hydraulic Traction Assembly

Ref.	Part Number	Qty.	Description
1	99-6193	1	Hose ASM
3	105-4342	1	Hose ASM
4	105-4332	1	Hose-HYD
5	112-0203	1	Tube-HYD
6	112-0204	1	Tube-HYD
7	105-4333	1	Hose-HYD
8	105-4336	1	Hose-HYD
9	121-2575	1	Hose ASM

Ref.	Part Number	Qty.	Description
10	240-3	2	Grommet-Rubber
11	69-9010	4	Washer
12	340-74	2	Nut-Lock, Bulkhead
13	69-9000	2	Spacer
18	94-5350	2	Fitting-Tee
18:1	237-65	3	O-Ring
19	3290-378	1	Tie-Cable
20	3290-379	1	Tie-Cable

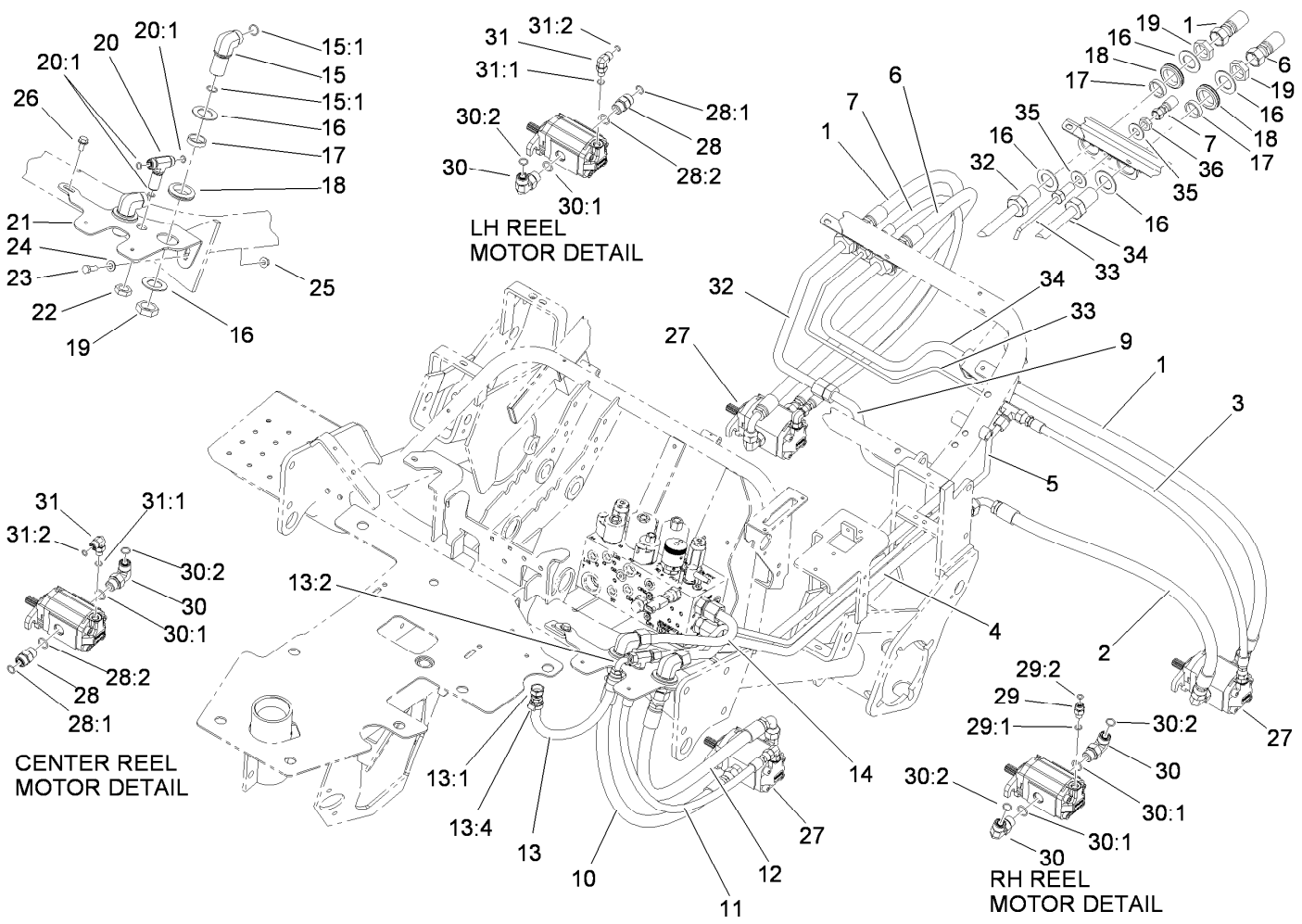

Hydraulic Reel Drive Assembly

Ref.	Part Number	Qty.	Description
1	95-2908	2	Hose-HYD
2	105-5404	1	Hose-HYD
3	105-5405	1	Hose-HYD
4	105-5493	1	Tube-HYD
5	105-4327	1	Tube-HYD, Casedrain
6	95-2909	1	Hose-HYD
7	106-9674	1	Hose-HYD
9	107-2582	1	Tube-HYD
9:1	237-65	1	O-Ring ●
10	105-5400	1	Hose-HYD
11	105-5402	1	Hose-HYD
12	105-5401	1	Hose-HYD
13	105-5409	1	Hose ASM
13:1	105-8311	1	Fitting-HYD
13:2	105-8312	1	Fitting-HYD, 90 DEG
13:4	2412-141	2	Clamp-Drive, Worm
14	105-5482	1	Tube-HYD
15	340-72	2	Fitting-Bulkhead, 90 DEG

Ref.	Part Number	Qty.	Description
15:1	237-65	2	O-Ring
16	69-9010	8	Washer
17	69-9000	4	Spacer
18	240-3	4	Grommet-Rubber
19	340-74	4	Nut-Lock, Bulkhead
20	105-8281	1	Tee-Bulkhead
20:1	237-22	3	O-Ring
21	105-8253-01	1	Bracket-Bulkhead
22	340-70	1	Nut-Lock
23	322-5	1	Screw-HH
24	3256-23	1	Washer-Plain
25	32128-20	1	Nut-HF
26	32104-32	3	Screw-HWH
27	112-9200	3	HYD Motor ASM
28	340-4	2	Fitting-Straight
28:1	237-30	1	O-Ring
28:2	237-79	1	O-Ring
29	340-92	1	Fitting-Straight

● Not illustrated

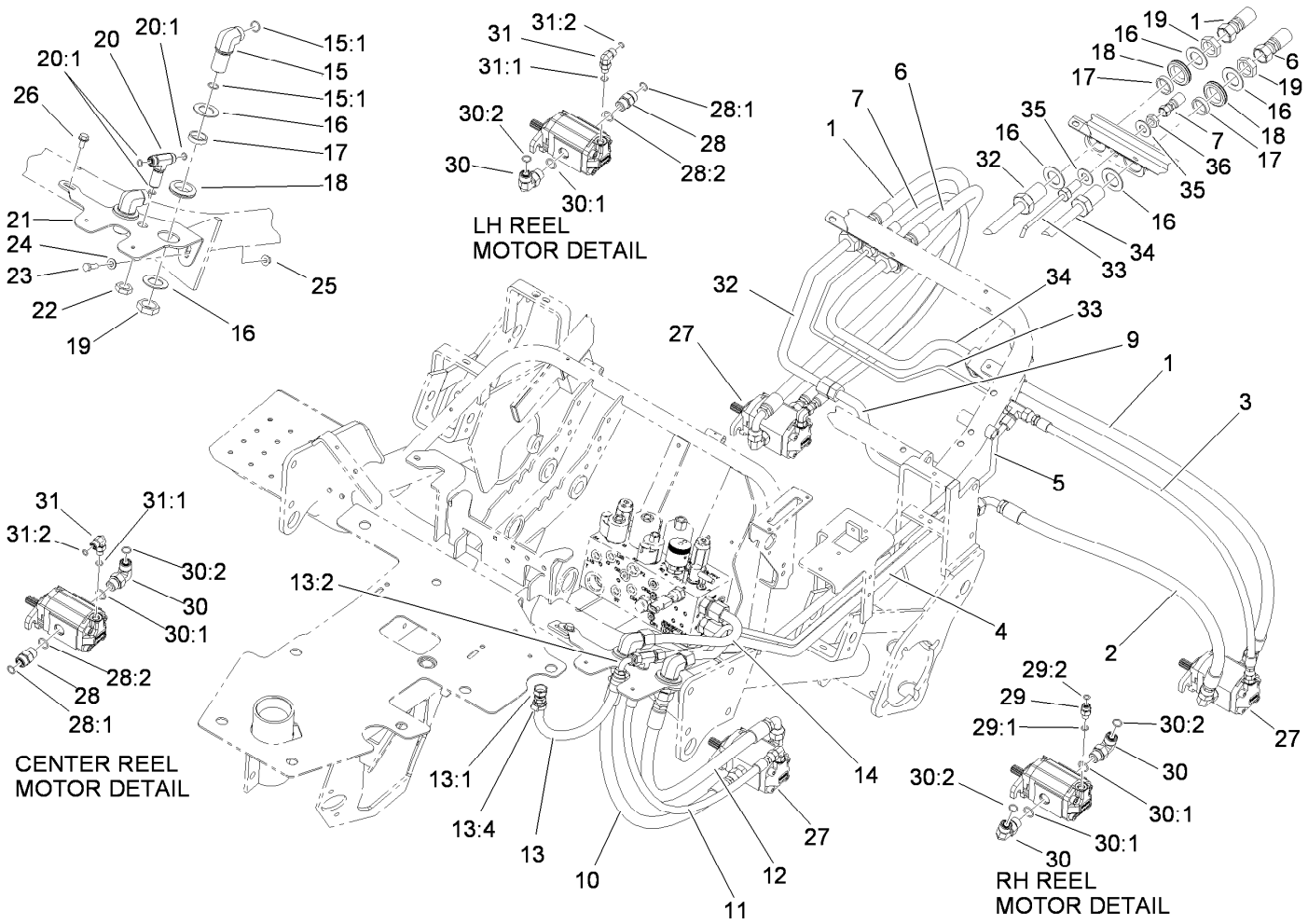

Hydraulic Reel Drive Assembly (continued)

Ref.	Part Number	Qty.	Description
29:1	237-78	1	O-Ring
29:2	237-21	1	O-Ring
30	340-98	4	Fitting-Elbow, 90 DEG
30:1	237-79	1	O-Ring
30:2	237-30	1	O-Ring
31	340-132	2	Fitting-Elbow, 90 DEG
31:1	237-78	1	O-Ring
31:2	237-21	1	O-Ring

Ref.	Part Number	Qty.	Description
32	107-2581	1	Tube-HYD
32:1	237-65	1	O-Ring ●
33	107-2583	1	Tube-HYD
33:1	237-21	1	O-Ring ●
34	107-2580	1	Tube-HYD
34:1	237-65	2	O-Ring ●
35	69-8980	2	Washer
36	340-78	1	Nut-Lock

● Not illustrated

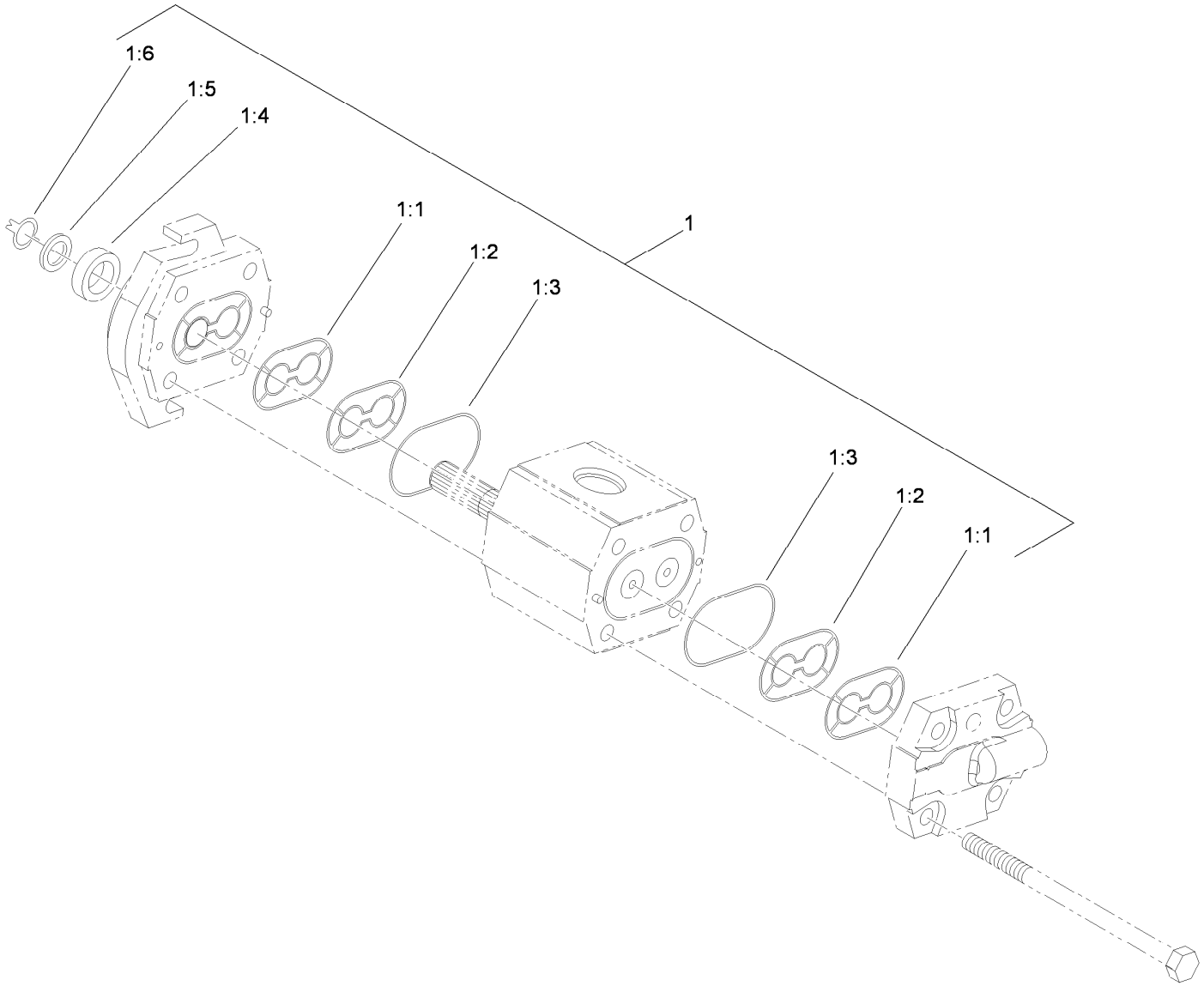

Hydraulic Motor Assembly No. 112-9200

Ref.	*Part Number*	*Qty.*	*Description*
1	112-9184	1	Seal Kit
1:1		2	Seal-Extrusion, Anti ●
1:2		2	Seal-Pressure ●
1:3		2	O-Ring ●
1:4		1	Seal-Shaft ●
1:5		1	Washer-Backup ●
1:6		1	Ring-Snap ●

● Not serviced separately

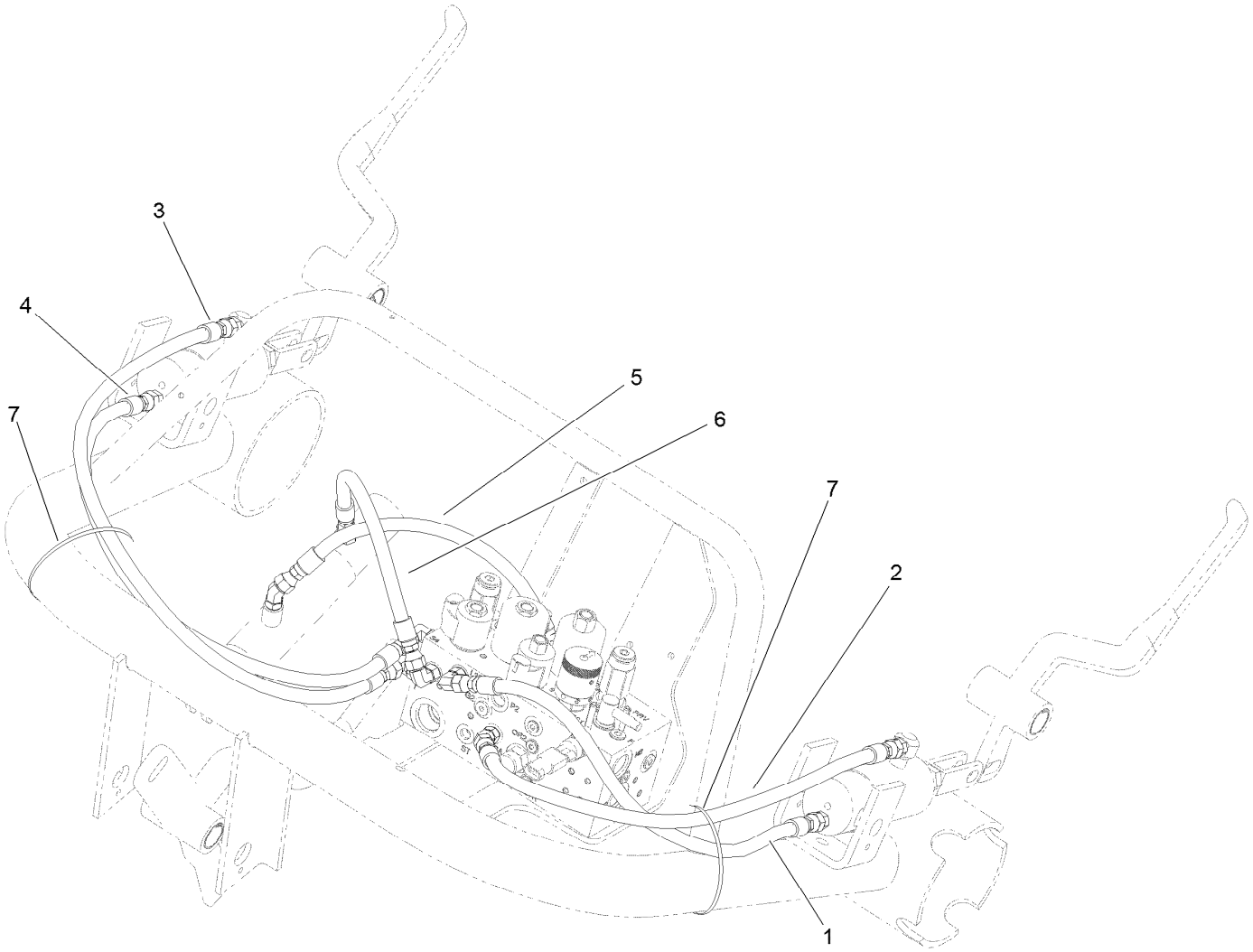

Hydraulic Lift Assembly

Ref.	*Part Number*	*Qty.*	*Description*
1	108-6505	1	Hose-HYD
2	108-6506	1	Hose-HYD
3	108-6507	1	Hose-HYD
4	108-6508	1	Hose-HYD
5	112-9185	1	Hose ASM
6	108-6510	1	Hose ASM
7	3290-379	2	Tie-Cable

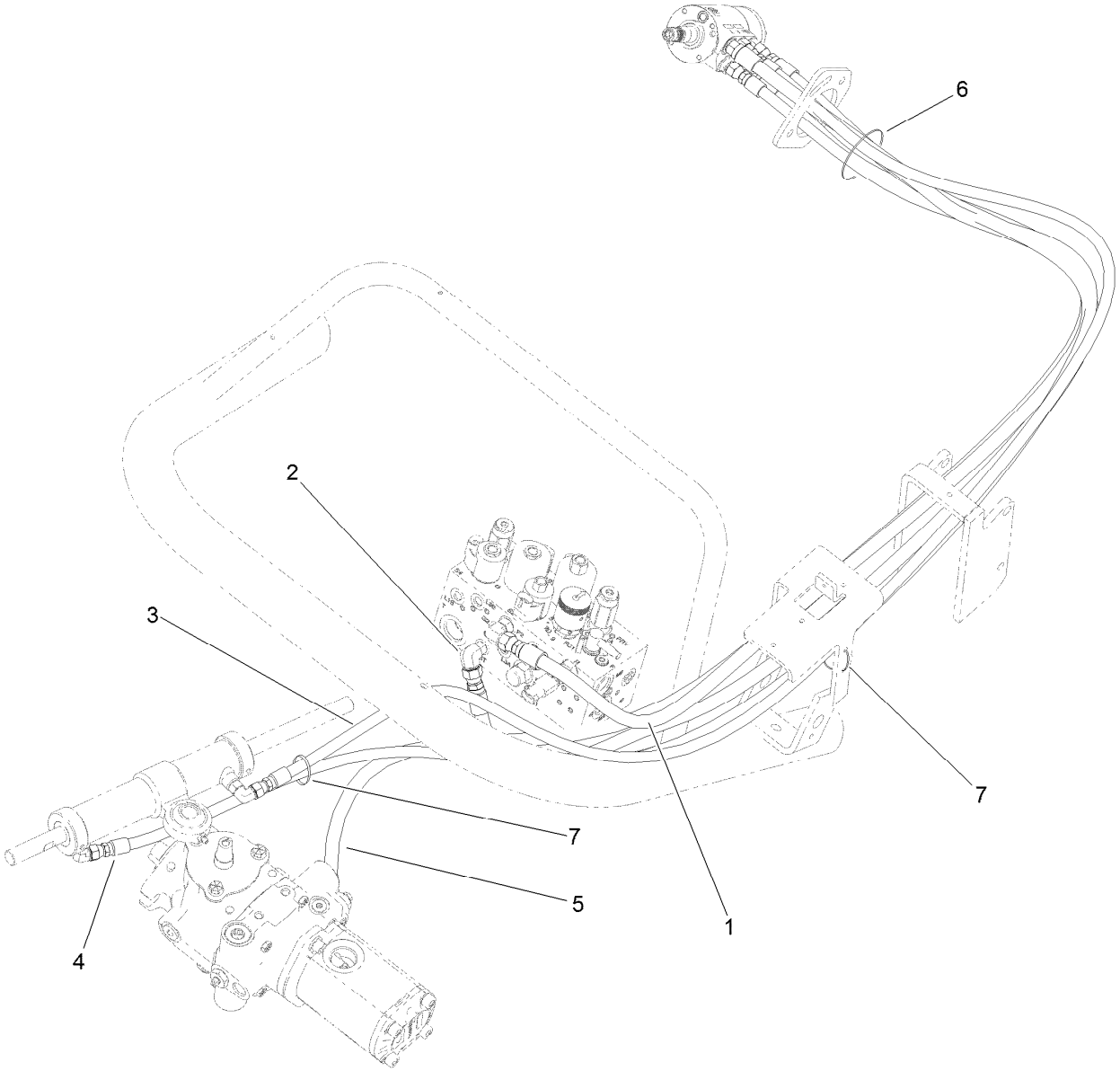

Hydraulic Steering Assembly

Ref.	Part Number	Qty.	Description
1	105-4339	1	Hose-HYD
2	112-0273	1	HYD Hose ASM
2:3	237-42	1	O-Ring ●
3	105-4337	1	Hose-HYD
4	100-4892	1	Hose-HYD
5	105-4340	1	HYD Hose ASM
6	3334-945	1	Tie-Cable
7	3290-378	3	Tie-Cable

● Not illustrated

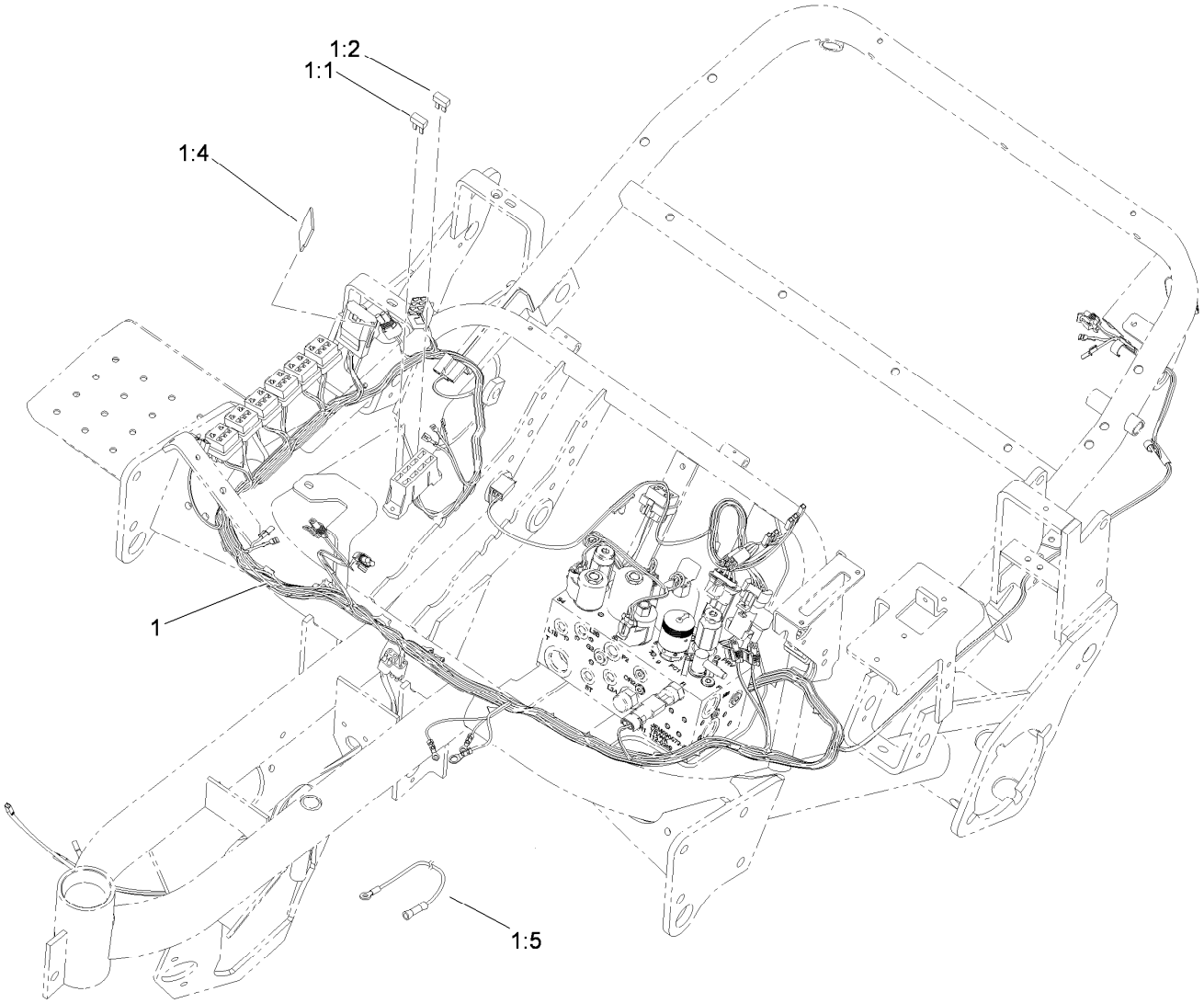

Wire Harness Routing Assembly

Ref.	*Part Number*	*Qty.*	*Description*
1	114-3319	1	Harness-Wire, Main
1:1	218-578	2	Fuse-Blade, 10 Amp
1:2	109101	1	Fuse-Blade, 20 Amp
1:4	92-3188	2	Diode-Board, Circuit
1:5	106-4641	1	Harness-Wire, Fusible Link

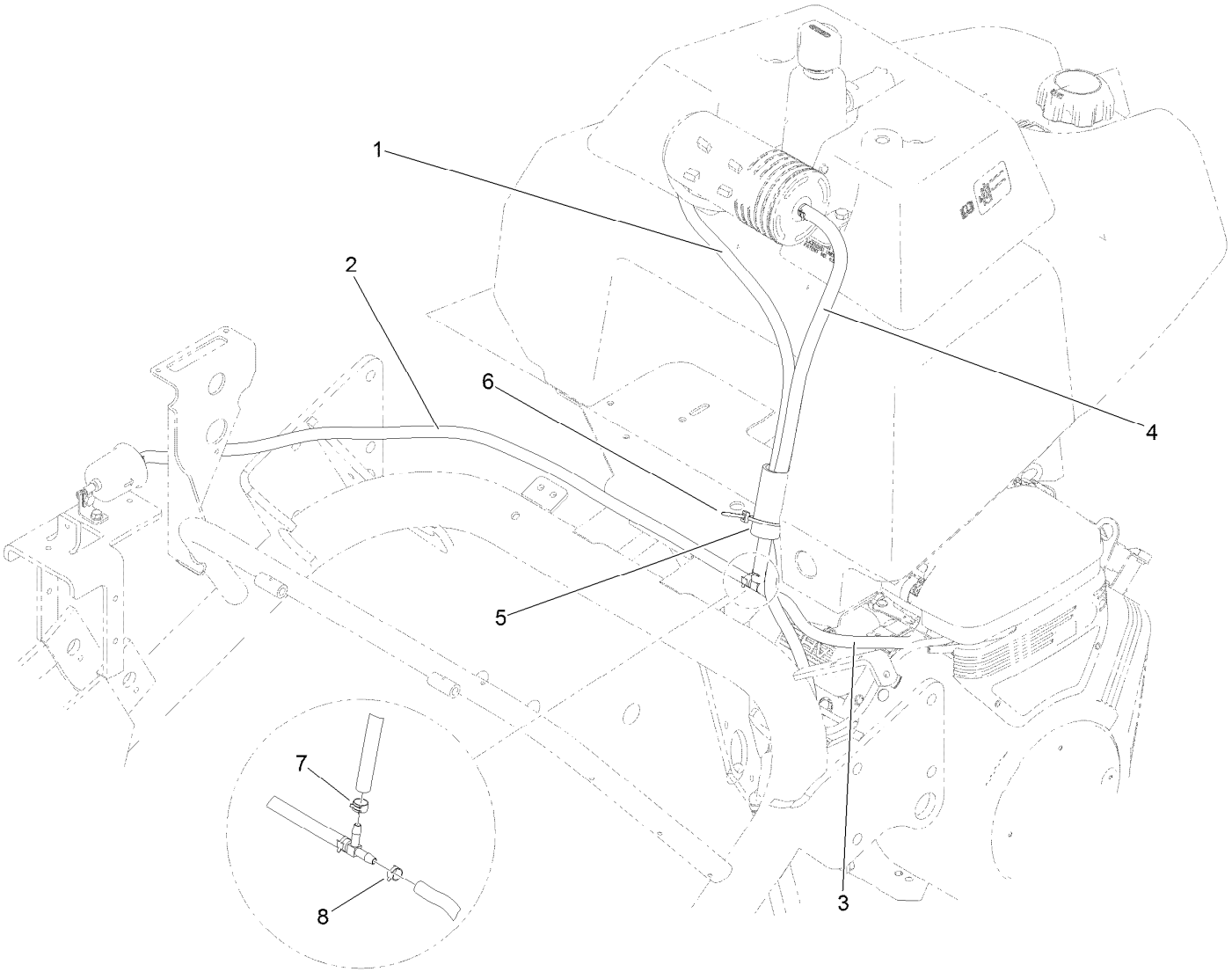

Carbon Canister Hose Routing Assembly

Ref.	*Part Number*	*Qty.*	*Description*
1	121-2585	1	Hose ASM
2	121-2584	1	Hose ASM
3	109-0296	1	Hose-Fuel
4	114-4028	1	Hose-Fuel
5	121-2586	1	Tubing-Convoluted, Slit
6	3290-378	2	Tie-Cable
7	92-2379	1	Clamp-Hose
8	2412-98	1	Clamp-Hose

Attachments and Accessories

For 04358 Greensmaster 3150 2-Wheel Drive Traction Unit

Product Name	Model/Part
Turf Evaluator	04399
Three-Wheel Drive Kit without ROPS	04476
Dethatching Unit	04479
Spiker Kit	04494
Tri-Roller Kit	04495
8-Blade DPA Reel Mower	04618
11-Blade DPA Reel Mower	04619
14-Blade DPA Reel Mower	04624
Weight Kit, Greensmaster and Sand Pro/Infield Pro Traction Unit	100-6442
Spark Arrestor Screen	104-6540
Light Kit	105-8336
Oil Cooler Kit	105-8339
Premium All Season Hydraulic Fluid (55 Gallon Drum)	108-1177
Premium All Season Hydraulic Fluid (5 Gallon Pail)	108-1178
Premium Engine Oil SAE 30 (Drum)	108-1196
Premium Engine Oil SAE 30 (Pail)	108-1197
Speed Control Kit	108-6472
Lamp-LED, Low Draw	112-9177
Bimini Folding Shade Assembly	115-4510
Wireless Hourmeter	115-4754
Hydraulic Hose Kit	117-2725
Premium Synthetic Bio-Degradable Hydraulic Fluid (5 Gallon Pail)	119-2157
Premium Synthetic Bio-Degradable Hydraulic Fluid (55 Gallon Drum)	119-2158
Tire-Traction	119-3516
Toro Reel Paper (10 Pack)	125-5610
Toro Reel Shim (0.002in)	125-5611
MVP Initial 800 Hour Filter Kit, 2012 and After Greensmaster 3150-D Traction Unit	131-6262
MVP Standard Filter Kit, 2012 and After Greensmaster 3150-D Traction Unit	131-8785
Arm Rest Kit	30707
Weight Kit, Greensmaster 3100, 3150 or 3250-D Traction Unit with Three-Wheel Drive	99-1645

Notes:

Notes:

TORO®

Count on it.