Form No. 3437-880 Rev B

Count on it.

Operator's Manual

Greensmaster® 3420 TriFlex® Traction Unit

Model No. 04540—Serial No. 405700000 and Up

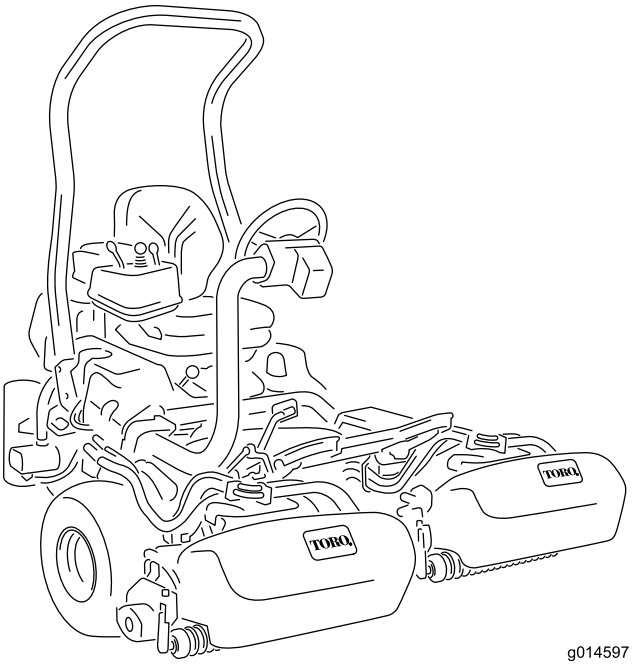

g014597

Register at www.Toro.com.
Original Instructions (EN)

CE UK CA

3437-880

This product complies with all relevant European directives; for details, please see the separate product specific Declaration of Conformity (DOC) sheet.

It is a violation of California Public Resource Code Section 4442 or 4443 to use or operate the engine on any forest-covered, brush-covered, or grass-covered land unless the engine is equipped with a spark arrester, as defined in Section 4442, maintained in effective working order or the engine is constructed, equipped, and maintained for the prevention of fire.

The enclosed engine owner's manual is supplied for information regarding the US Environmental Protection Agency (EPA) and the California Emission Control Regulation of emission systems, maintenance, and warranty. Replacements may be ordered through the engine manufacturer.

⚠ WARNING

CALIFORNIA
Proposition 65 Warning

Diesel engine exhaust and some of its constituents are known to the State of California to cause cancer, birth defects, and other reproductive harm.

Battery posts, terminals, and related accessories contain lead and lead compounds, chemicals known to the State of California to cause cancer and reproductive harm. Wash hands after handling.

Use of this product may cause exposure to chemicals known to the State of California to cause cancer, birth defects, or other reproductive harm.

Introduction

This machine is a ride-on, reel-blade greens mower intended to be used by professional, hired operators in commercial applications. It is primarily designed for cutting grass on well-maintained turf. Using this product for purposes other than its intended use could prove dangerous to you and bystanders.

Read this information carefully to learn how to operate and maintain your product properly and to avoid injury and product damage. You are responsible for operating the product properly and safely.

Visit www.Toro.com for more information, including safety tips, training materials, accessory information, help finding a dealer, or to register your product.

Whenever you need service, genuine Toro parts, or additional information, contact an authorized Toro distributor and have the model and serial numbers of your product ready. Figure 1 identifies the location of the model and serial numbers on the product. Write the numbers in the space provided.

Important: **With your mobile device, you can scan the QR code on the serial number decal (if equipped) to access warranty, parts, and other product information.**

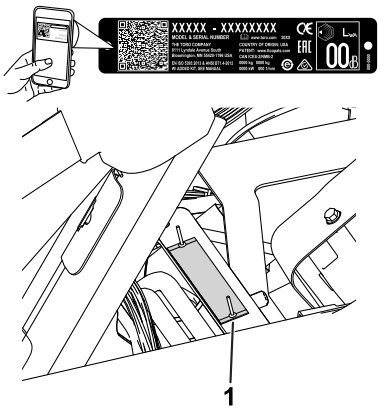

g233264

Figure 1

1. Model and serial number location—lift the seat and locate the serial plate.

Model No. _____

Serial No. _____

This manual identifies potential hazards and has safety messages identified by the safety-alert symbol (Figure 2), which signals a hazard that may cause serious injury or death if you do not follow the recommended precautions.

© 2021—The Toro® Company
8111 Lyndale Avenue South
Bloomington, MN 55420

Contact us at www.Toro.com.
Printed in the USA
All Rights Reserved

g000502

Figure 2
Safety-alert symbol

This manual uses 2 words to highlight information. **Important** calls attention to special mechanical information and **Note** emphasizes general information worthy of special attention.

Contents

Safety 4
General Safety 4
Safety and Instructional Decals 4
Setup 9
1 Installing the Roll Bar 10
2 Installing the Seat 11
3 Installing the Service and Clip Decals 11
4 Installing the Steering Wheel 11
5 Activating and Charging the Battery 12
6 Installing the Grass-Basket Hooks 13
7 Installing the Cutting Units 14
8 Setting the Clip-Control Feature 14
9 Adding Rear Weight 14
10 Installing the CE Guard Kit 15
11 Installing the CE Decals 15
12 Reducing the Tire Pressure 16
13 Burnishing the Brakes 16
Product Overview 16
Controls 16
InfoCenter Control 18
Specifications 23
Attachments/Accessories 23
Before Operation 23
Before Operation Safety 23
Fuel Specification 24
Filling the Fuel Tank 24
Performing Daily Maintenance 24
During Operation 25
During Operation Safety 25
Breaking in the Machine 26
Starting the Engine 26
Checking the Machine after Starting the Engine 26
Shutting Off the Engine 27
Checking the Safety-Interlock System 27
Driving the Machine without Mowing 28
Mowing the Green 28
After Operation 30
After Operation Safety 30
Inspecting and Cleaning after Mowing 31
Hauling the Machine 31
Towing the Machine 32
Maintenance 33
Maintenance Safety 33
Recommended Maintenance Schedule(s) 34
Daily Maintenance Checklist 35
Lubrication 36
Greasing the Machine 36
Engine Maintenance 36
Engine Safety 36
Servicing the Air Cleaner 36
Servicing the Engine Oil 37
Fuel System Maintenance 39
Draining Water from the Fuel Filter 39
Replacing the Fuel Filter/Water Separator 39
Inspecting the Fuel Lines and Connections 40
Electrical System Maintenance 40
Electrical System Safety 40
Servicing the Battery 40
Locating the Fuses 41
Jump-Starting the Machine 42
Drive System Maintenance 42
Checking the Tire Pressure 42
Checking the Torque of the Wheel Nuts 42
Adjusting the Transmission for Neutral 42
Adjusting the Transport Speed 43
Adjusting the Mowing Speed 44
Cooling System Maintenance 44
Cooling System Safety 44
Cleaning the Radiator Screen 44
Checking the Engine-Coolant Level 45
Brake Maintenance 45
Burnishing the Brakes 45
Adjusting the Brakes 45
Belt Maintenance 46
Adjusting the Alternator Belt 46
Hydraulic System Maintenance 46
Hydraulic System Safety 46
Servicing the Hydraulic Fluid 46
Checking the Hydraulic Lines and Hoses 48
Cutting Unit Maintenance 49
Blade Safety 49
Installing and Removing the Cutting Units 49
Checking the Reel-to-Bedknife Contact 52
Backlapping the Reels 52
Storage 53
Storage Safety 53
Preparing the Machine for Storage 53

Safety

This machine has been designed in accordance with EN ISO 5395 and ANSI B71.4-2017 and meets these standards when you complete the setup procedures.

General Safety

This product is capable of amputating hands and feet and of throwing objects.

- Read and understand the contents of this *Operator's Manual* before starting the engine.
- Use your full attention while operating the machine. Do not engage in any activity that causes distractions; otherwise, injury or property damage may occur.
- Do not put your hands or feet near moving components of the machine.
- Do not operate the machine without all guards and other safety protective devices in place and functioning properly on the machine.
- Keep bystanders and children out of the operating area. Never allow children to operate the machine.
- Shut off the machine, remove the key, and wait for all movement to stop before you leave the operator's position. Allow the machine to cool before adjusting, servicing, cleaning, or storing it.

Improperly using or maintaining this machine can result in injury. To reduce the potential for injury, comply with these safety instructions and always pay attention to the safety-alert symbol ⚠, which means Caution, Warning, or Danger—personal safety instruction. Failure to comply with these instructions may result in personal injury or death.

Safety and Instructional Decals

Safety decals and instructions are easily visible to the operator and are located near any area of potential danger. Replace any decal that is damaged or missing.

decal106-6755

106-6755

1. Engine coolant under pressure.
2. Explosion hazard—read the *Operator's Manual.*
3. Warning—do not touch the hot surface.
4. Warning—read the *Operator's Manual.*

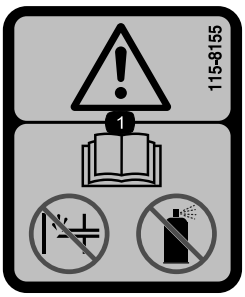

decal115-8155

115-8155

1. Warning—read the *Operator's Manual*, do not prime or use starting fluid.

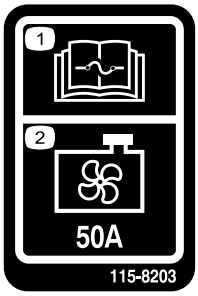

decal115-8203

115-8203

1. Read the *Operator's Manual* for fuse information.
2. Radiator fan—50 A

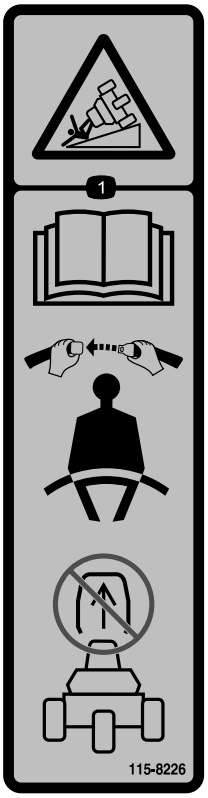

decal115-8226

115-8226

1. Tipping hazard—read the *Operator's Manual*; wear a seatbelt; do not remove the roll bar.

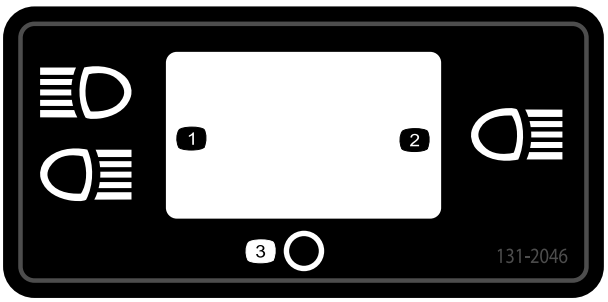

decal131-2046

131-2046

1. Double lights
2. Single light
3. Off

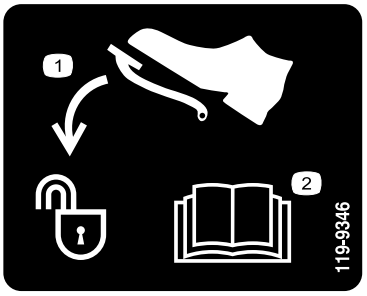

decal119-9346

119-9346

1. Press the pedal to unlock.
2. Read the *Operator's Manual* for more information.

---

decalbatterysymbols

Battery Symbols

Some or all of these symbols are on your battery.

1. Explosion hazard
2. No fire, open flame, or smoking
3. Caustic liquid/chemical burn hazard
4. Wear eye protection.
5. Read the *Operator's Manual*.
6. Keep bystanders away from the battery.
7. Wear eye protection; explosive gases can cause blindness and other injuries.
8. Battery acid can cause blindness or severe burns.
9. Flush eyes immediately with water and get medical help fast.
10. Contains lead; do not discard

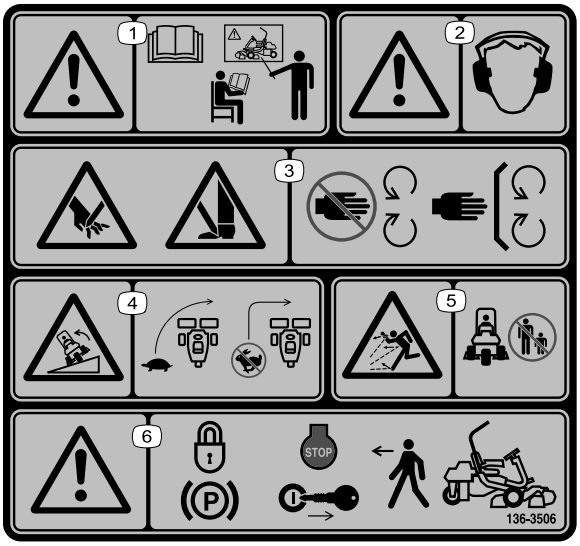

decal136-8506

136-8506

1. Warning—read the *Operator's Manual*; do not operate this machine unless you are trained.
2. Warning—wear hearing protection.
3. Cutting/dismemberment hazard of hand or foot—stay away from moving parts; keep all guards and shields in place.
4. Tipping hazard—slow the machine before turning; do not turn at high speeds.
5. Thrown object hazard—keep bystanders away.
6. Warning—engage the parking brake, shut off the engine, and remove the key before leaving the machine.

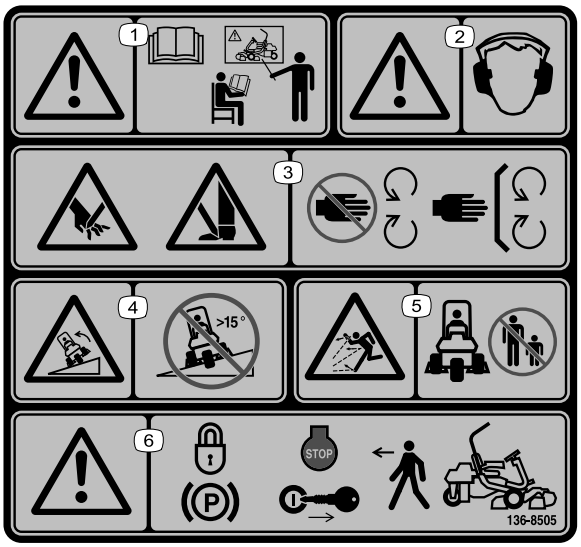

decal136-8505

136-8505

Note: This machine complies with the industry standard stability test in the static lateral and longitudinal tests with the maximum recommended slope indicated on the decal. Review the instructions for operating the machine on slopes in the *Operator's Manual* as well as the conditions in which you would operate the machine to determine whether you can operate the machine in the conditions on that day and at that site. Changes in the terrain can result in a change in slope operation for the machine. If possible, keep the cutting units lowered to the ground while operating the machine on slopes. Raising the cutting units while operating on slopes can cause the machine to become unstable.

1. Warning—read the *Operator's Manual*; receive training before operating the machine.
2. Warning—hearing protection must be worn.
3. Cutting/dismemberment hazard of hands or feet—keep all guards and shields in place.
4. Tipping hazard—do not use on slopes greater than 15°.
5. Thrown object hazard—keep bystanders out of the operating area.
6. Warning—engage the parking brake, shut off the engine, and remove the ignition key before leaving the machine.

decal133-8062

133-8062

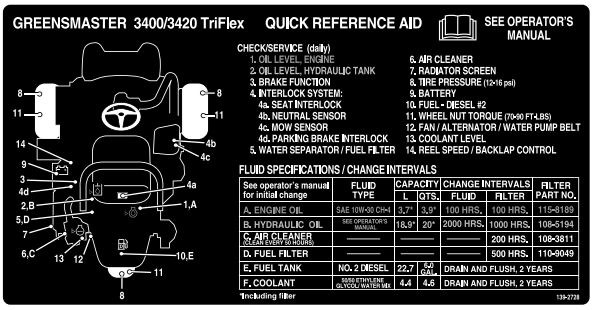

decal139-2728

139-2728

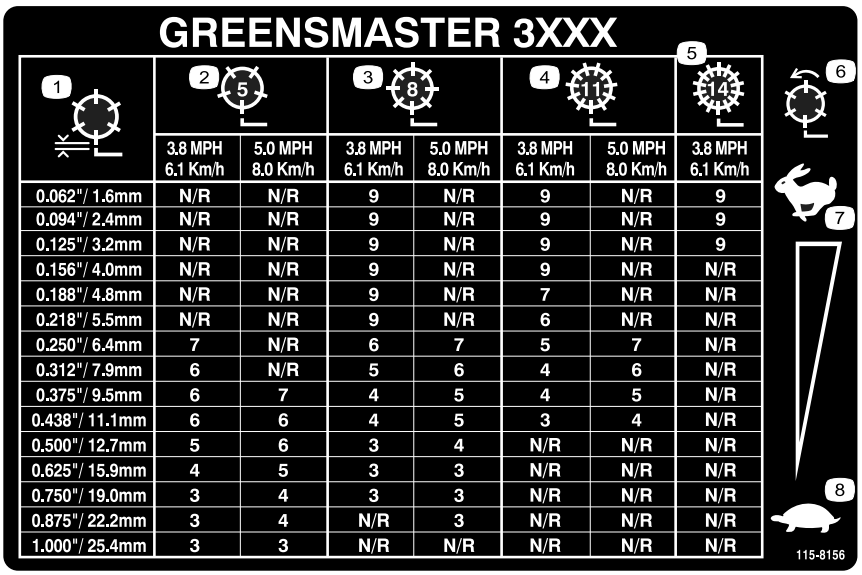

	5		8		11		14
	3.8 MPH 6.1 Km/h	5.0 MPH 8.0 Km/h	3.8 MPH 6.1 Km/h	5.0 MPH 8.0 Km/h	3.8 MPH 6.1 Km/h	5.0 MPH 8.0 Km/h	3.8 MPH 6.1 Km/h
0.062"/ 1.6mm	N/R	N/R	9	N/R	9	N/R	9
0.094"/ 2.4mm	N/R	N/R	9	N/R	9	N/R	9
0.125"/ 3.2mm	N/R	N/R	9	N/R	9	N/R	9
0.156"/ 4.0mm	N/R	N/R	9	N/R	9	N/R	N/R
0.188"/ 4.8mm	N/R	N/R	9	N/R	7	N/R	N/R
0.218"/ 5.5mm	N/R	N/R	9	N/R	6	N/R	N/R
0.250"/ 6.4mm	7	N/R	6	7	5	7	N/R
0.312"/ 7.9mm	6	N/R	5	6	4	6	N/R
0.375"/ 9.5mm	6	7	4	5	4	5	N/R
0.438"/ 11.1mm	6	6	4	5	3	4	N/R
0.500"/ 12.7mm	5	6	3	4	N/R	N/R	N/R
0.625"/ 15.9mm	4	5	3	3	N/R	N/R	N/R
0.750"/ 19.0mm	3	4	3	3	N/R	N/R	N/R
0.875"/ 22.2mm	3	4	N/R	3	N/R	N/R	N/R
1.000"/ 25.4mm	3	3	N/R	N/R	N/R	N/R	N/R

decal115-8156

115-8156

1. Reel height
2. 5–blade cutting unit
3. 8–blade cutting unit
4. 11–blade cutting unit
5. 14–blade cutting unit
6. Reel speed
7. Fast
8. Slow

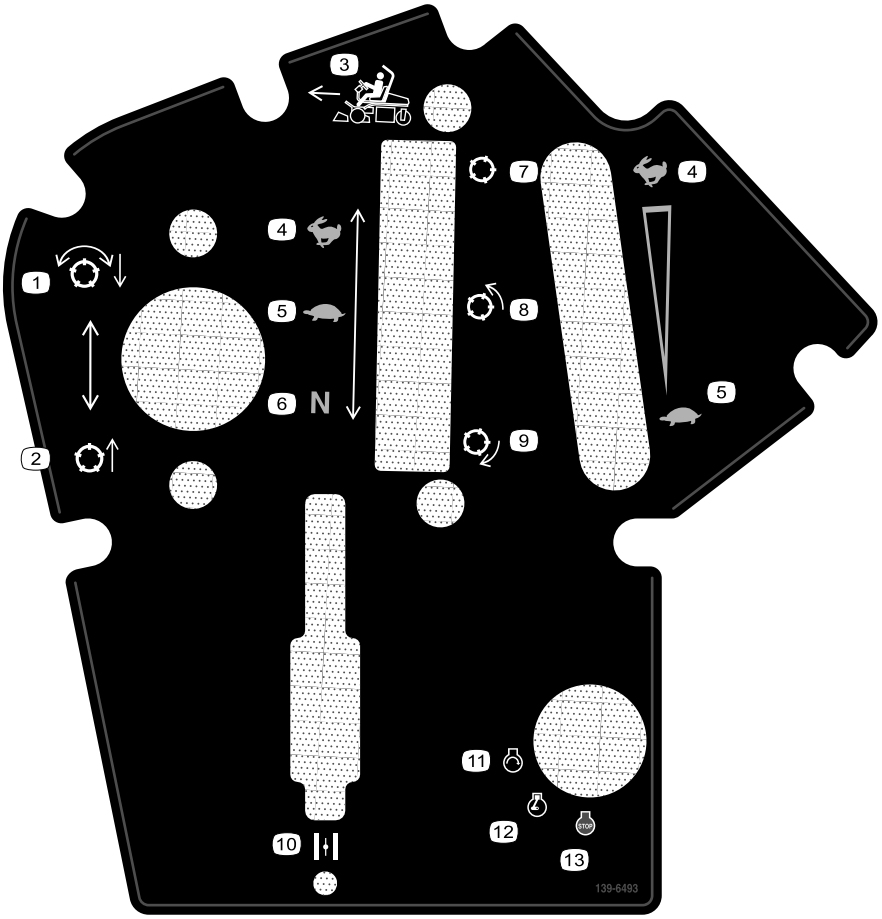

decal139-6493

139-6493

1. Lower and engage the reels.
2. Raise and disengage the reels.
3. Mow direction
4. Fast
5. Slow
6. Neutral
7. Reel—transport
8. Reel—mow
9. Reel—backlap
10. Choke
11. Engine—start
12. Engine—run
13. Engine—stop

Setup

Loose Parts

Use the chart below to verify that all parts have been shipped.

Procedure	Description	Qty.	Use
1	Roll bar Bolt (1/2 x 3-3/4 inches) Flange nut (1/2 inch)	1 4 4	Install the roll bar.
2	Seat Kit (order separately; contact your authorized Toro distributor)	1	Install the seat to the base.
3	Service decal (Part No. 139-2728) Clip decal (115-8156)	1 1	Install the service and clip decals.
4	Steering wheel Locknut (1-1/2 inches) Washer Steering-wheel cap	1 1 1 1	Install the steering wheel.
5	No parts required	–	Activate and charge the battery.
6	Grass-basket hook Flange bolts	6 12	Install the grass-basket hooks.
7	Gauge bar Cutting unit (obtain from your authorized Toro distributor) Grass basket Electric-reel-motor counterweight Capscrew O-ring	1 3 3 3 6 3	Install the cutting units and counter weights.
8	No parts required	–	Set the clip-control feature.
9	Weight Kit, Part No. 121-6665 (purchase separately) Note: This kit is not required for units with the 3 wheel drive kit installed.	1	Add rear weight.
10	CE Guard Kit—Part No. 04443 (sold separately)	1	Install the CE guard kit.
11	Warning decal (Part No. 136-8505) CE mark decal Production year decal	1 1 1	Install the CE decals (if required).
12	No parts required	–	Reduce the tire pressure.
13	No parts required	–	Burnish the brakes.

Media and Additional Parts

Description	Qty.	Use
Operator's Manual	1	Review the manual before operating the machine.
Engine owner's manual	1	Use the manual to reference engine information.
Declaration of Conformity Noise rating certificate	1 1	For CE compliance
Ignition keys	2	Start the engine.

1

Installing the Roll Bar

Parts needed for this procedure:

1	Roll bar
4	Bolt (1/2 x 3-3/4 inches)
4	Flange nut (1/2 inch)

Procedure

1. Remove the top crate support from the crate.
2. Remove the roll bar from the crate.
3. Remove the 3 bolts that secure the right side cover to the machine and remove the side cover.
4. Remove the 2 bolts that secure the fuse-block bracket to the ROPS bracket as shown in Figure 3.

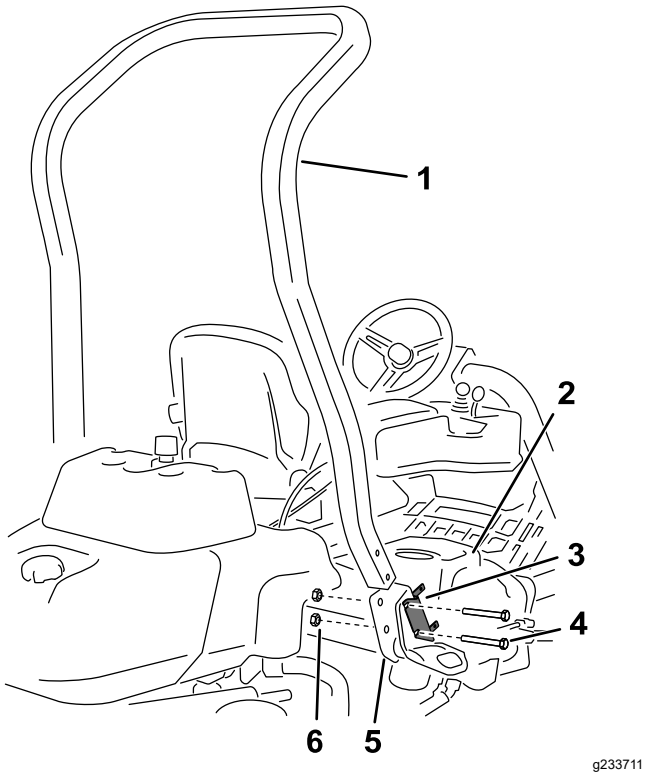

Figure 3

1. Roll bar
2. Right side cover
3. Fuse block bracket
4. Bolt (1/2 x 3-3/4 inches)
5. Right ROPS bracket
6. Flange nut (1/2 inch)

5. Align the fuse-block bracket on the right ROPS bracket and use 4 bolts (1/2 x 3-3/4 inches) and 4 flange nuts (1/2 inch) to install the roll bar into the ROPS brackets on each side of the machine.
6. Torque the fasteners to 136 to 149 N·m (100 to 110 ft-lb).
7. Use the 3 bolts that you previously removed to secure the right side cover to the machine.

2

Installing the Seat

Parts needed for this procedure:

1	Seat Kit (order separately; contact your authorized Toro distributor)

Procedure

Acquire your desired seat kit from your distributor and install it to the machine; refer to the kit *Installation Instructions*.

3

Installing the Service and Clip Decals

Parts needed for this procedure:

1	Service decal (Part No. 139-2728)
1	Clip decal (115-8156)

Procedure

Install the service decal (Part No. 139-2728) and the clip decal (Part No. 115-8156) to the seat; refer to Figure 4 for the premium seat (Model No. 04719) or Figure 5 for the standard seat (Model No. 04508).

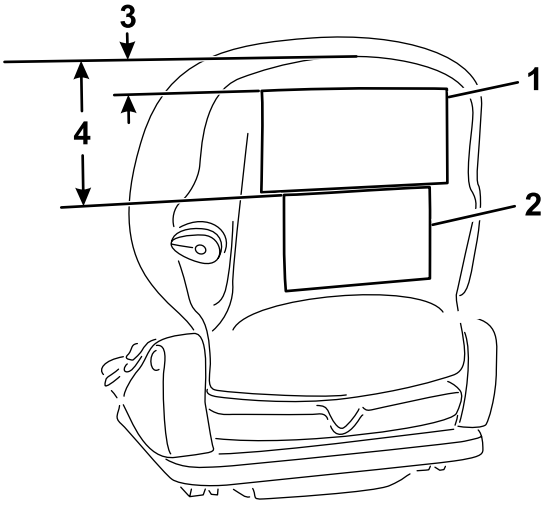

g291701

Figure 4

Premium Seat (Model No. 04719)

1. Service decal
2. Clip decal
3. 2.5 cm (1 inch)
4. 16.5 cm (6.5 inches)

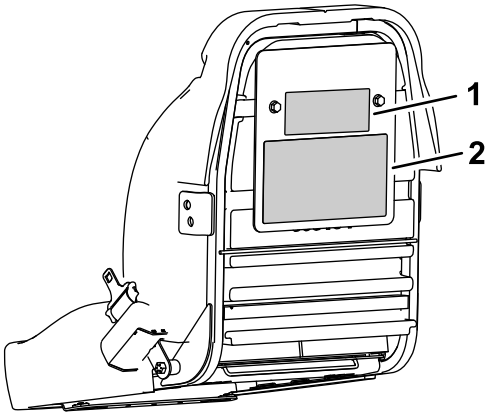

g291702

Figure 5

Standard Seat (Model No. 04508)

1. Clip decal
2. Service decal

4

Installing the Steering Wheel

Parts needed for this procedure:

1	Steering wheel
1	Locknut (1-1/2 inches)
1	Washer
1	Steering-wheel cap

Procedure

1. Slide the steering wheel onto the steering shaft (Figure 6).

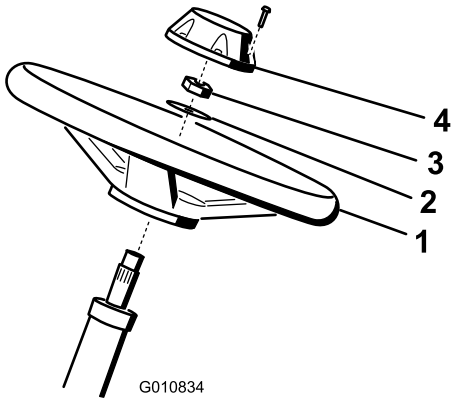

g010834

Figure 6

1. Steering wheel
2. Washer
3. Locknut
4. Cap

2. Slide the washer onto the steering shaft (Figure 6).
3. Secure the steering wheel to the shaft with a locknut and tighten it to 27 to 35 N·m (20 to 26 ft-lb) (Figure 6).
4. Install the cap to the steering wheel and secure it with 6 bolts (Figure 6).

5

Activating and Charging the Battery

No Parts Required

Procedure

Use only electrolyte (1.265 specific gravity) to fill the battery initially.

⚠ WARNING

Battery terminals or metal tools could short against metal machine components, causing sparks. Sparks can cause the battery gasses to explode, resulting in personal injury.

- **When removing or installing the battery, do not allow the battery terminals to touch any metal parts of the machine.**
- **Do not allow metal tools to short between the battery terminals and metal parts of the machine.**

1. Remove the fasteners and battery clamp and lift out the battery.

   Important: **Do not add electrolyte while the battery is in the machine. You could spill it, causing corrosion.**

2. Clean the top of the battery and remove the vent caps (Figure 7).

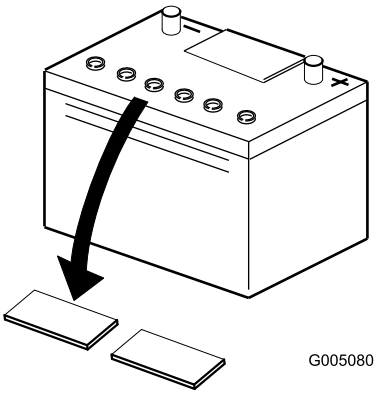

g005080

Figure 7

3. Carefully fill each cell with electrolyte until the plates are covered with about 6 mm (1/4 inch) of fluid (Figure 8).

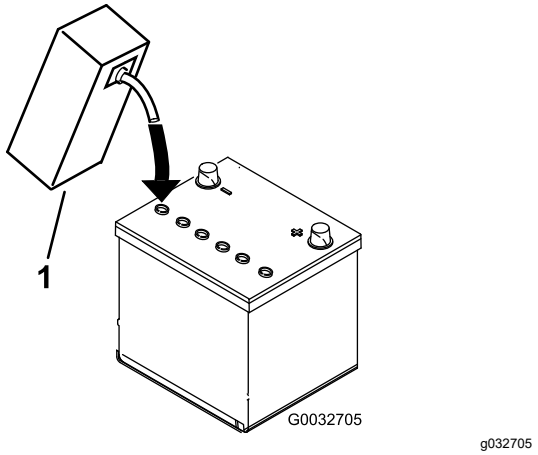

Figure 8

1. Electrolyte

4. Allow approximately 20 to 30 minutes for the electrolyte to soak into the plates. Fill as necessary to bring the electrolyte to within about 6 mm (1/4 inch) of the bottom of the fill well (Figure 8).
5. Connect a 2 to 4 A battery charger to the battery posts. Charge the battery for at least 2 hours at 4 A or for at least 4 hours at 2 A until the specific gravity is 1.250 or higher and the temperature is at least 16°C (60°F) with all cells gassing freely.

⚠ WARNING

Charging the battery produces gasses that can explode.

Never smoke near the battery and keep sparks and flames away from the battery.

Important: **If you do not charge the battery for at least the time specified above, you may reduce the life of the battery.**

6. When the battery is charged, disconnect the charger from the electrical outlet and battery posts.

   Note: After the battery has been activated, add only distilled water to replace normal loss, although maintenance-free batteries should not require water under normal operating conditions.

   Important: **Failure to correctly activate the battery may result in battery gassing and/or premature battery failure.**
7. Install the vent caps.
8. Place the battery on the battery tray and secure it with the battery clamp and fasteners removed previously.
9. Install the positive cable (red) to the positive (+) terminal and then the negative cable (black) to the negative (–) terminal of the battery and secure them with the bolts and nuts (Figure 9). Slide the rubber boot over the positive terminal to prevent a possible short from occurring.

⚠ WARNING

Incorrect battery cable routing could damage the tractor and cables, causing sparks. Sparks can cause the battery gasses to explode, resulting in personal injury.

- **Always disconnect the negative (black) battery cable before disconnecting the positive (red) cable.**
- **Always connect the positive (red) battery cable before connecting the negative (black) cable.**

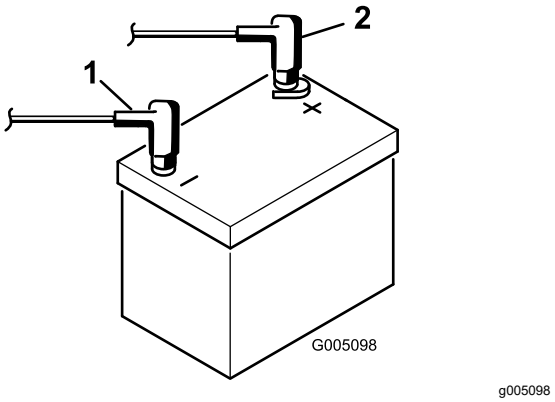

Figure 9

1. Negative (-)
2. Positive (+)

6

Installing the Grass-Basket Hooks

Parts needed for this procedure:

6	Grass-basket hook
12	Flange bolts

Procedure

Install the 6 grass-basket hooks onto the ends of the suspension-arm bars using the 12 flange bolts (Figure 10).

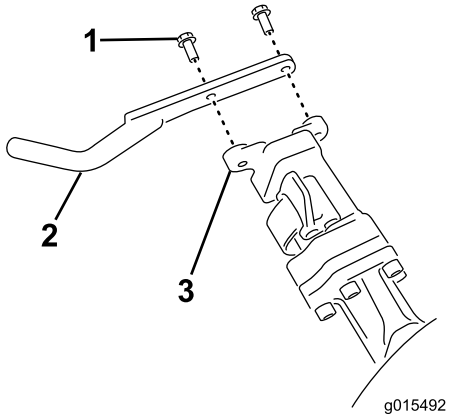

g015492

Figure 10

1. Flange bolt
2. Grass-basket hook
3. Suspension-arm bar

7

Installing the Cutting Units

Parts needed for this procedure:

1	Gauge bar
3	Cutting unit (obtain from your authorized Toro distributor)
3	Grass basket
3	Electric-reel-motor counterweight
6	Capscrew
3	O-ring

Procedure

1. Prepare the cutting units for installation; refer to your cutting unit *Operator's Manual*.
2. Apply grease to the inside diameter of the drive coupler.
3. Install an O-ring to each reel motor as shown in Figure 11.

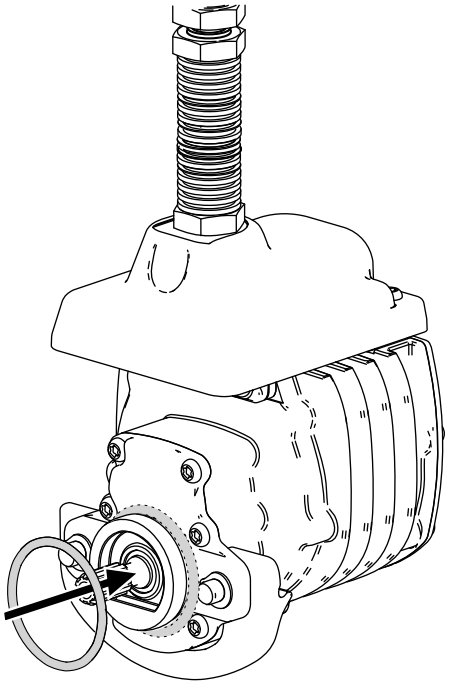

g256064

Figure 11

4. Install the electric-reel-motor counterweight; refer to Installing the Electrical Counterweights (page 49).
5. Install the cutting units; refer to Installing the Cutting Units (page 49).

8

Setting the Clip-Control Feature

No Parts Required

Procedure

The machine has a clip-control feature that varies the speed of the reels with the speed of the machine to maintain a constant clip. This achieves a consistent, high quality-of-cut and a uniform after-cut appearance. The clip-control feature is off by default; to configure it and turn it on, refer to Setting the Clip-Control Feature (page 20)

9

Adding Rear Weight

Parts needed for this procedure:

1	Weight Kit, Part No. 121-6665 (purchase separately) **Note:** This kit is not required for units with the 3 wheel drive kit installed.

Procedure

This unit complies with EN ISO 5395:2013 and ANSI B71.4-2017 when equipped with Weight Kit, Part No. 121-6665.

Note: If the unit is equipped with a 3-Wheel Drive Kit, additional weight is not required to meet EN ISO 5395:2013 and ANSI B71.4-2017.

10

Installing the CE Guard Kit

Parts needed for this procedure:

1	CE Guard Kit—Part No. 04443 (sold separately)

Procedure

Install the CE guard kit; refer to the CE Guard Kit for Greensmaster 3420 TriFlex Traction Unit Installation Instructions.

11

Installing the CE Decals

Parts needed for this procedure:

1	Warning decal (Part No. 136-8505)
1	CE mark decal
1	Production year decal

Procedure

If you use this machine in a country that complies to CE standards, perform the following steps after you install the guard kit to the machine:

- Apply the CE warning decal (Part No. 136-8505) over the existing warning decal (Part No. 136-8506).
- Apply the CE mark decal to the frame under the front of the seat (Figure 12).

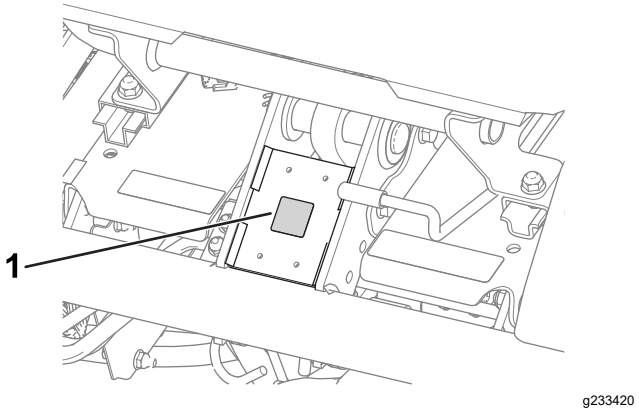

Figure 12

1. CE mark decal

- Install the production year decal near the serial plate (Figure 13).

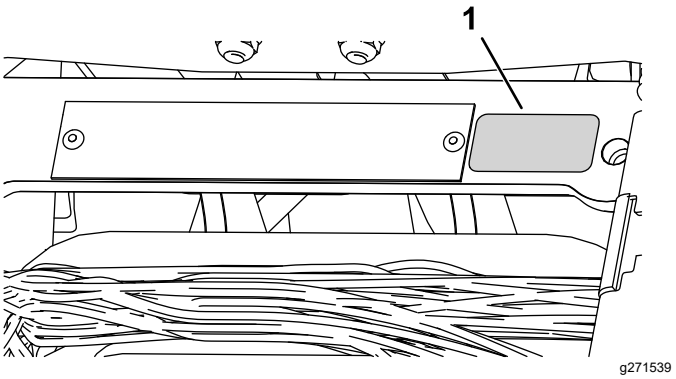

Figure 13

1. Production year decal

12

Reducing the Tire Pressure

No Parts Required

Procedure

The tires are overinflated at the factory for shipping purposes. Reduce the pressure to the proper levels before starting the machine; refer to Checking the Tire Pressure (page 42).

13

Burnishing the Brakes

No Parts Required

Procedure

Burnish the brakes; refer to Burnishing the Brakes (page 45).

Product Overview

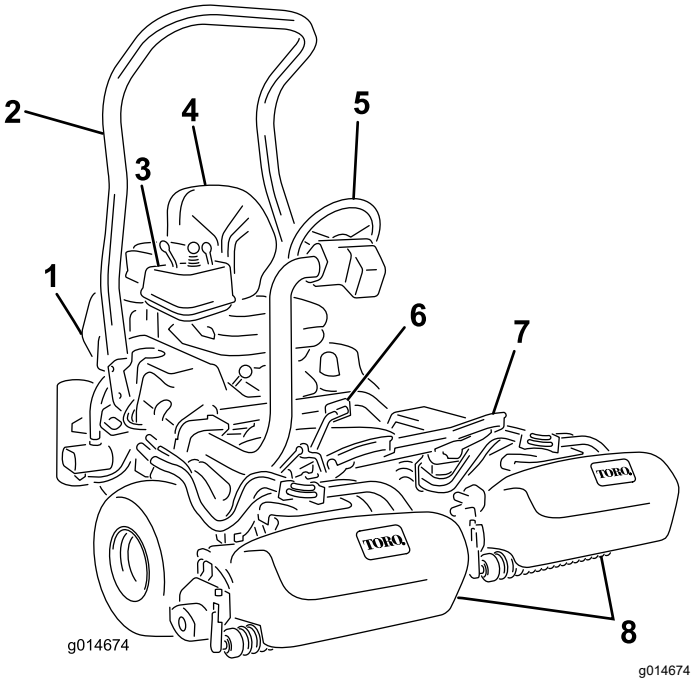

Figure 14

1. Engine
2. Roll bar
3. Control panel
4. Seat
5. Steering wheel
6. Traction pedal
7. Footrest
8. Cutting units

Controls

Traction Pedal

The traction pedal (Figure 15) has 3 functions: to make the machine move forward, to move it backward, and to stop the machine. Press the top of the pedal to move forward and the bottom of the pedal to move backward or to assist in stopping when moving forward. Also, allow the pedal to move to the neutral position to stop the machine. For your comfort, do not rest the heal of your foot on the reverse pad of the traction pedal when you are driving the machine forward. (Figure 16).

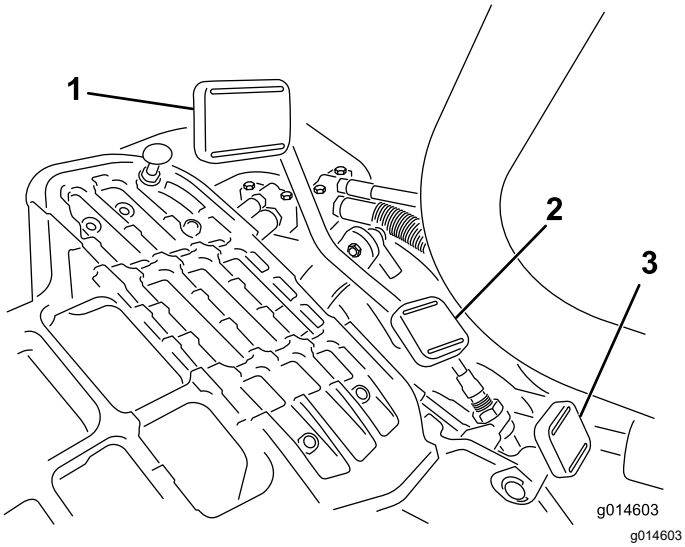

Figure 15

1. Traction pedal—forward
2. Taction pedal—reverse
3. Steering-arm-locking pedal

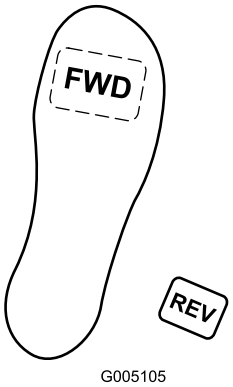

Figure 16

Ground speeds are as follows:

- 3.2 to 8 km/h (2 to 5 mph) forward mowing speed
- 16 km/h (10 mph) maximum transport speed
- 4.0 km/h (2.5 mph) reverse speed

Steering-Arm-Locking Pedal

Press the pedal (Figure 15) and raise or lower the steering arm for operator comfort, then, release the pedal to lock the arm in place.

Throttle Lever

The throttle lever (Figure 17) allows you to control the speed of the engine. Move the throttle lever toward the FAST position to increases the engine speed; move it toward the SLOW position to decrease the engine speed.

Note: You cannot shut off the engine using the throttle lever.

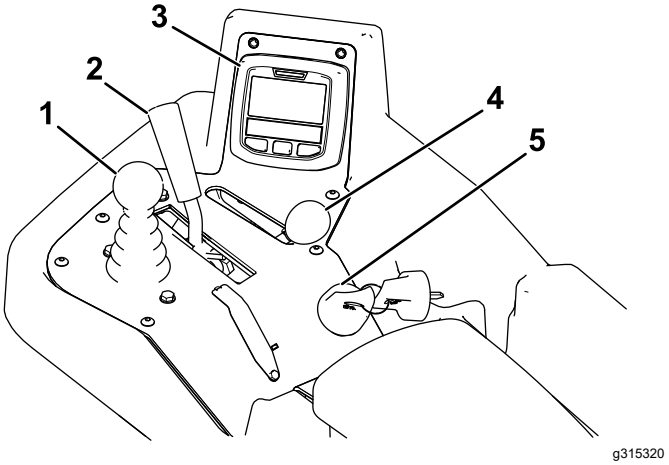

Figure 17

1. Raise/lower mow control
2. Functional-control lever
3. InfoCenter control
4. Throttle lever
5. Ignition switch

Raise/Lower Mow Control

Moving the control (Figure 17) forward during cutting operation lowers the cutting units and starts the reels. Pull back on the control to stop the reels and raise the cutting units. To stop the reels without raising the cutting units, pull back on the control momentarily and releasing it. Start the reels by moving the control forward.

Functional Control Lever

The functional control lever (Figure 17) provides 2 traction selections plus a NEUTRAL position. You can shift from mow to transport or transport to mow (not to neutral) while the machine is in motion; no damage will result.

- REAR position—neutral position; use when backlapping the reels
- MIDDLE position—use when cutting grass
- FRONT position—use when driving the machine between job sites

Ignition Switch

Insert the key into the switch (Figure 17) and turn it clockwise to the START position to start the engine. Release the key as soon as the engine starts; the key moves to the ON position. Turn the key counterclockwise to the STOP position to shut off the engine.

Parking Brake Lever

Pull the brake lever (Figure 18) to engage the parking brake. Disengage it by squeezing the release lever on the underside of the brake lever and lowering it to the released position. Engage the parking brake whenever you leave the machine.

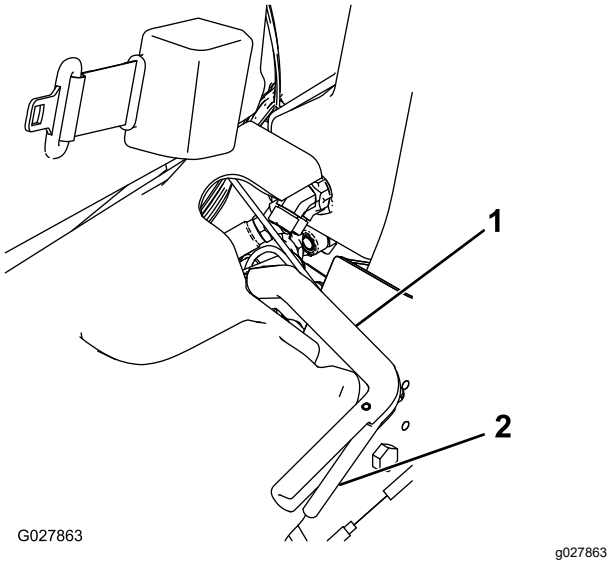

Figure 18

1. Parking-brake lever
2. Release lever

InfoCenter Control

Using the InfoCenter LCD Display

The InfoCenter LCD display shows information about your machine such as the generator status, the speed, and various diagnostics and other information about the machine and the battery pack. Figure 19 and Figure 20 illustrate the splash screen and main information screen of the InfoCenter. You can switch between the splash screen and main information screen at any time by pressing any of the InfoCenter buttons and then selecting the appropriate directional arrow.

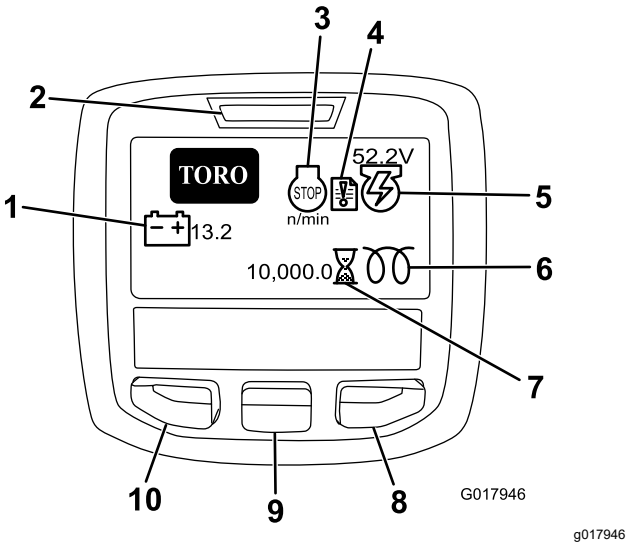

Figure 19

1. Battery voltage
2. Power light/fault indicator
3. Engine rpm/status
4. Fault log
5. Generator voltage/status
6. Glow plug
7. Hour meter
8. Right button
9. Down button
10. Menu access/back button

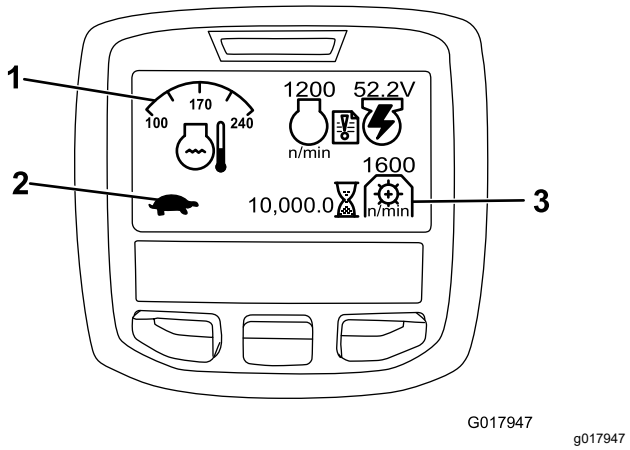

Figure 20

1. Coolant temperature
2. Functional control status
3. PTO speed

- ENGINE RPM/STATUS—indicates the engine rpm.
- FAULT LOG—indicates that there is a current fault log to review.
- GENERATOR VOLTAGE/STATUS—indicates the generator voltage.
- HOUR METER—indicates the total hours the machine has operated. It starts to function whenever the key switch is rotated to On.
- PTO SPEED—indicates the PTO speed.
- GLOW PLUG—indicates that the glow plug is active.
- BATTERY VOLTAGE—indicates the battery potential in Volts.

- COOLANT TEMPERATURE—indicates the engine coolant temperature in either °C or °F.
- FUNCTIONAL CONTROL STATUS—transport mode is indicated by a rabbit and mow mode is indicated by a turtle.
- ENGINE OIL PRESSURE light—this icon appears if the engine oil pressure drops below a safe level.
- MENU ACCESS/BACK button—press this button to access the InfoCenter menus. You can use it to back out of any menu you are currently using.
- DOWN button—use this button to scroll down menus.
- RIGHT button—use this button to open a menu where a right arrow indicates additional content.

Note: The purpose of each button may change depending on what is required at the time. Each button is labeled with an icon displaying its current function.

Using the Menus

To access the InfoCenter-menu system, press the MENU ACCESS button while at the main screen. This brings you to the MAIN MENU. Refer to the following tables for a synopsis of the options available from the menus:

MAIN MENU	
Menu Item	**Description**
FAULTS	The FAULTS menu contains a list of the recent machine faults. Refer to the Service Manual or your authorized Toro distributor for more information on the FAULTS menu and the information contained there.
SERVICE	The SERVICE menu contains information on the machine such as hours of use and other similar numbers.
DIAGNOSTICS	The DIAGNOSTICS menu lists various states that the machine currently has. You can use this to troubleshoot certain issues as it quickly tells you which machine controls are on and which are off.
SETTINGS	The SETTINGS menu allows you to customize and modify configuration variables on the InfoCenter display.
ABOUT	The ABOUT menu lists the model number, serial number, and software version of your machine.

SERVICE	
Menu Item	**Description**
HOURS	Lists the total number of hours that the machine, engine, reels, backlap, and fan have been on, as well as the number of hours the machine has been transported and overheated.
COUNTS	Lists the number of preheats and starts the machine has experienced.
BACKLAP	Turns backlapping ON/OFF (once ON you can turn backlapping Off with this setting or by turning off the ignition key).

DIAGNOSTICS	
Menu Item	**Description**
ENGINE RUN	Indicates if the following items are active: Key start, key run, joystick lower, joystick raise, neutral, seat or parking brake, OK run, and RTR or ETR.
GLOWPLUGS	Indicates if the following items are active: Key start, timeout limited, and glowplugs.
FAN	Indicates if the fan is active in the following instances: Engine high temp, oil high temp, engine or hydraulic high temp, and fan on.
S1–S4	Controls the raising and lowering of the solenoids.
REELS ENABLE	Indicates if the eReel is enabled.

SETTINGS	
Menu Item	**Description**
UNITS	Controls the units used on the InfoCenter. The menu choices are English or Metric.
LANGUAGE	Controls the language used on the InfoCenter.
LCD BACKLIGHT	Controls the brightness of the LCD display.
LCD CONTRAST	Controls the contrast of the LCD display.
PROTECTED MENUS	Allows the distributor/engineer to access protected menus by inputting a passcode.
PROTECT SETTINGS	Controls the protected menus.
RESET DEFAULTS	Resets the InfoCenter to default settings.
RAISE DELAY	Controls the raise delay time for the center cutting unit.

LOWER DELAY	Controls the lower delay for the center cutting unit.
TAPOFF DELAY	Controls the tap-off delay.
REEL SPEED	Controls the reel speed.
BACKLAP RPM	Controls the backlap rpm speed.
CLIP CONTROL	Turns the automatic clip-control feature ON/OFF.
BLADE COUNT	Set the number of blades in each reel. This setting is only necessary if CLIP CONTROL is set to ON.
CLIP (FOC)	Sets the desired clip. This setting is only necessary if CLIP CONTROL is set to ON.

ABOUT	
Menu Item	**Description**
MODEL	Lists the model number of the machine.
SN	Lists the serial number of the machine.
TEC 5001	Lists the software revision of the master controller.
INFOCENTER	Lists the software revision of the InfoCenter.
CU1	Lists the software revision of the first cutting unit.
CU2	Lists the software revision of the second cutting unit.
CU3	List the software revision of the third cutting unit.
GENERATOR	Lists the serial number of the generator.
CAN BUS	Lists the machine communication bus status.

Adjusting the Center Cutting Unit Raise/Lower Delay

Adjust the raise and lower delay time for the center cutting with the InfoCenter, as desired from 1 to 10 according to the table below. The factory default setting is 6 (375 ms) and is optimized for a 3.8 mph mow speed.

Increment Number	Delay Time (Seconds)
1	0.100
2	0.150
3	0.200
4	0.250
5	0.300
6	0.375
7	0.475
8	0.600
9	0.750
10	0.925

Adjusting the Tap-off Delay

The tap-off delay feature allows the cutting units to turn off without raising, and you may adjust it with the InfoCenter. The delay setting represents the maximum time for the raise/lower joystick to remain in the raise position to activate this feature. The factory default setting is 1 which disables this feature.

Increment Number	Delay Time (Seconds)
1	Off
2	0.050
3	0.100
4	0.150
5	0.200
6	0.250
7	0.300
8	0.350
9	0.400
10	0.450

Setting the Clip-Control Feature

To achieve a consistent, high quality-of-cut and a uniform after cut appearance, the machine has a clip-control feature that varies the speed of the reels with the speed of the machine, to maintain a constant clip. This feature is OFF by default; configure it and turn it ON as follows:

1. From the SETTINGS menu, select CLIP CONTROL.
2. Set CLIP CONTROL to ON.
3. From the SETTINGS menu, select BLADE COUNT.
4. Set the BLADE COUNT to match the number of blades in each of your reels.
5. From the SETTINGS menu, select CLIP (FOC)
6. Set CLIP (FOC) to the desired clip setting.

Setting the Reel Speed

The clip-control feature automatically sets the reel speed to match the machine speed. If you choose not to use the clip-control feature, set the reel speed manually as follows:

1. Select the height-of-cut at which the cutting units are set.
2. Choose the desired ground speed best suited for conditions.

3. Using the appropriate graph (Figure 20) for 5-, 8-, 11-, or 14-blade cutting units, determine the proper reel speed setting.

	5		8		11		14
	3.8 MPH 6.1 Km/h	5.0 MPH 8.0 Km/h	3.8 MPH 6.1 Km/h	5.0 MPH 8.0 Km/h	3.8 MPH 6.1 Km/h	5.0 MPH 8.0 Km/h	3.8 MPH 6.1 Km/h
0.062"/ 1.6mm	N/R	N/R	9	N/R	9	N/R	9
0.094"/ 2.4mm	N/R	N/R	9	N/R	9	N/R	9
0.125"/ 3.2mm	N/R	N/R	9	N/R	9	N/R	9
0.156"/ 4.0mm	N/R	N/R	9	N/R	9	N/R	N/R
0.188"/ 4.8mm	N/R	N/R	9	N/R	7	N/R	N/R
0.218"/ 5.5mm	N/R	N/R	9	N/R	6	N/R	N/R
0.250"/ 6.4mm	7	N/R	6	7	5	7	N/R
0.312"/ 7.9mm	6	N/R	5	6	4	6	N/R
0.375"/ 9.5mm	6	7	4	5	4	5	N/R
0.438"/ 11.1mm	6	6	4	5	3	4	N/R
0.500"/ 12.7mm	5	6	3	4	N/R	N/R	N/R
0.625"/ 15.9mm	4	5	3	3	N/R	N/R	N/R
0.750"/ 19.0mm	3	4	3	3	N/R	N/R	N/R
0.875"/ 22.2mm	3	4	N/R	3	N/R	N/R	N/R
1.000"/ 25.4mm	3	3	N/R	N/R	N/R	N/R	N/R

g014736

g014736

Figure 21

4. To set the reel speed, on the InfoCenter open the Main Menu and scroll down to SETTINGS.
5. In the SETTINGS menu, scroll down to REEL SPEED and use the ± button to set the reel speed to the desired number.

Setting the Machine Configuration Passcode

You can set a passcode on the InfoCenter so that operator's cannot change the following machine settings without it: RAISE DELAY, LOWER DELAY, TAP-OFF DELAY, REEL SPEED, BACKLAP RPM, CLIP CONTROL, BLADE COUNT, and CLIP (FOC).

1. From the SETTINGS menu, select PROTECT SETTINGS.
2. Set PROTECT SETTINGS to ON.
3. When prompted, enter a 4-digit passcode.
4. Turn the ignition key to OFF to save the code.

Note: If you forget the user defined passcode, you can obtain a temporary passcode from your authorized Toro distributor.

Diagnosing the Fault-Log Indicator

The fault-log indicator icon appears on the main screen in the event of a fault in the machine. When this icon is present there is a new log entry in the Faults menu that you or your authorized Toro distributor can use to identify the problem.

For a list of faults, refer to your authorized Toro distributor or the *Service Manual*.

Seat-Adjusting Lever

The seat-adjusting lever is located on the front, left corner of the seat (Figure 22), allowing you to adjust the seat forward and rearward.

Note: If you need to adjust the seat more, you can remove the 4 nuts that secure the seat slide rails to the base and move the seat slide rails to the second set of mounting holes provided.

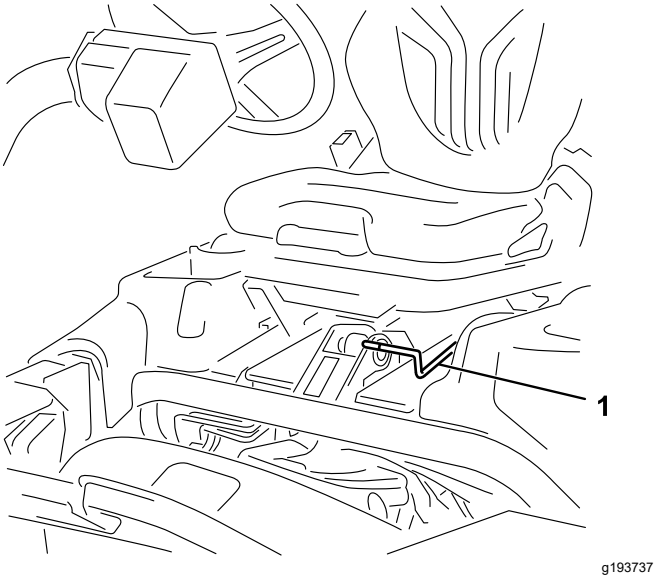

Figure 22

1. Seat-adjusting handle

Fuel-Shutoff Valve

Close the fuel-shutoff valve (Figure 23), behind the seat and under the fuel tank, when storing or transporting the machine on a truck or trailer.

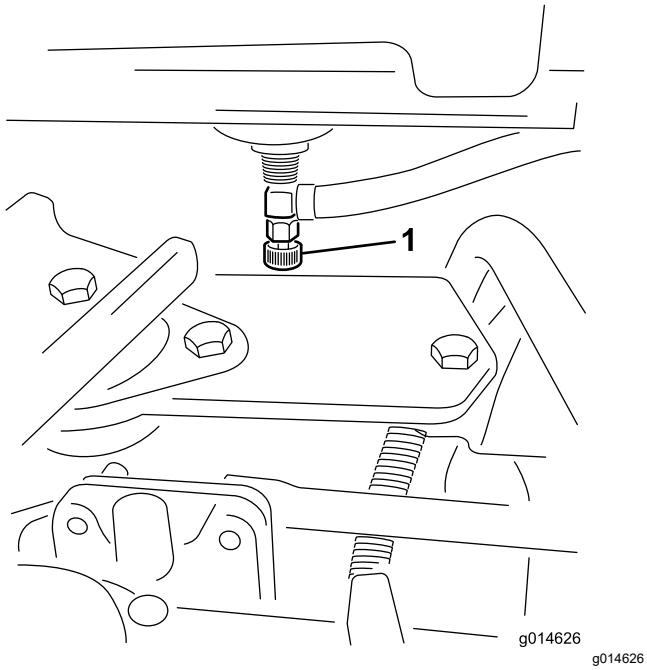

Figure 23

1. Fuel shutoff (under the fuel tank)

Cutting Unit Power Disconnect Connectors

Before installing, removing, or working on the cutting units, disconnect the cutting units from the power supply by separating the cutting unit power disconnect connector (Figure 24), located at the base of the rollover bar on the left side of the traction unit. Plug the connectors together before operating the machine.

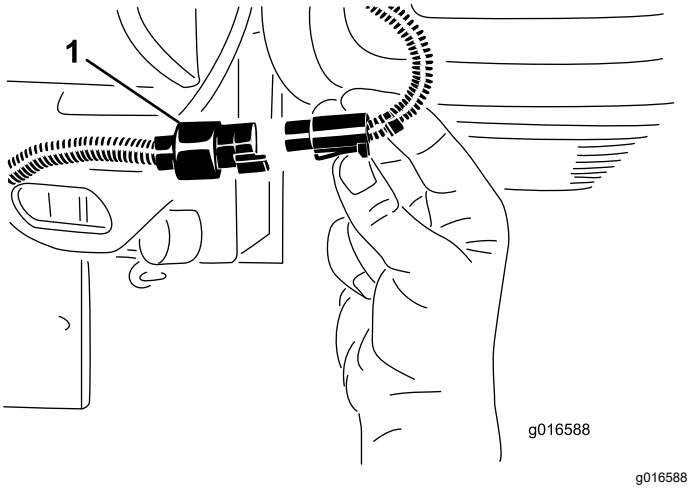

Figure 24

1. Cutting unit power disconnect connector

⚠ CAUTION

If you do not disconnect the power to the cutting units, someone could accidentally start the cutting unit, causing serious injury to hands and feet.

Always separate the cutting unit power disconnect connectors before working on the cutting units.

Specifications

Note: Specifications and design are subject to change without notice.

Width of cut	151 cm (59.5 inches)
Minimum ground clearance (at the machine centerline)	11 cm (4.5 inches)
Wheel tread (to the center of the tire)	128 cm (50.5 inches)
Wheel tread (to the outside of the tire)	154 cm (60.5 inches)
Wheel base	119 cm (46.9 inches)
Overall length (with baskets)	249 cm (98.0 inches)
Overall width	179 cm (70.6 inches)
Overall height	205 cm (80.8 inches)
Net weight with 8-blade reels	766 kg (1689 lb)
Net weight with 11-blade reels	770 kg (1698 lb)

Attachments/Accessories

A selection of Toro approved attachments and accessories is available for use with the machine to enhance and expand its capabilities. Contact your Authorized Service Dealer or authorized Toro distributor or go to www.Toro.com for a list of all approved attachments and accessories.

To ensure optimum performance and continued safety certification of the machine, use only genuine Toro replacement parts and accessories. Replacement parts and accessories made by other manufacturers could be dangerous, and such use could void the product warranty.

Operation

Note: Determine the left and right sides of the machine from the normal operating position.

Before Operation

Before Operation Safety

General Safety

- Never allow children or untrained people to operate or service the machine. Local regulations may restrict the age of the operator. The owner is responsible for training all operators and mechanics.
- Become familiar with the safe operation of the equipment, operator controls, and safety signs.
- Engage the parking brake, shut off the machine, remove the key, and wait for all movement to stop before you leave the operator's position. Allow the machine to cool before adjusting, servicing, cleaning, or storing it.
- Know how to stop the machine and shut off the machine quickly.
- Check that operator-presence controls, safety switches, and safety protective devices are attached and functioning properly. Do not operate the machine unless they are functioning properly.
- Before mowing, always inspect the machine to ensure that the cutting units are in good working condition.
- Inspect the area where you will use the machine and remove all objects that the machine could throw.

Fuel Safety

- Use extreme care in handling fuel. It is flammable and its vapors are explosive.
- Extinguish all cigarettes, cigars, pipes, and other sources of ignition.
- Use only an approved fuel container.
- Do not remove the fuel cap or fill the fuel tank while the engine is running or hot.
- Do not add or drain fuel in an enclosed space.
- Do not store the machine or fuel container where there is an open flame, spark, or pilot light, such as on a water heater or other appliance.
- If you spill fuel, do not attempt to start the engine; avoid creating any source of ignition until the fuel vapors have dissipated.

Fuel Specification

- **Fuel tank capacity:** 22.7 L (6 U.S. gallons)
- **Recommended Fuel:**
  - For best results, use only clean, fresh diesel fuel or biodiesel fuels with low (<500 ppm) or ultra low (<15 ppm) sulfur content. The minimum cetane rating should be 40. Purchase fuel in quantities that can be used within 180 days to ensure fuel freshness.
  - Use summer-grade diesel fuel (No. 2-D) at temperatures above -7° C (20° F) and winter-grade (No. 1-D or No. 1-D/2-D blend) below that temperature. Using winter-grade fuel at lower temperatures provides lower flash point and cold flow characteristics that will ease starting and reduce fuel filter plugging.

    Note: Using summer-grade fuel above -7° C (20° F) will contribute toward longer fuel pump life and increased power compared to winter-grade fuel.
  - This machine can also use a biodiesel blended fuel of up to B20 (20% biodiesel, 80% petrodiesel). The petrodiesel portion should be low or ultra-low sulfur. Observe the following precautions:
    - ◊ The biodiesel portion of the fuel must meet specification ASTM D6751 or EN14214.
    - ◊ The blended fuel composition should meet ASTM D975 or EN590.
    - ◊ Painted surfaces may be damaged by biodiesel blends.
    - ◊ Use B5 (biodiesel content of 5%) or lesser blends in cold weather.
    - ◊ Monitor seals, hoses, gaskets in contact with fuel as they may be degraded over time.
    - ◊ Fuel filter plugging may be expected for a time after converting to biodiesel blends.
    - ◊ Contact your authorized Toro distributor for more information on biodiesel.

Filling the Fuel Tank

1. Clean around the fuel-tank cap and remove it (Figure 25).

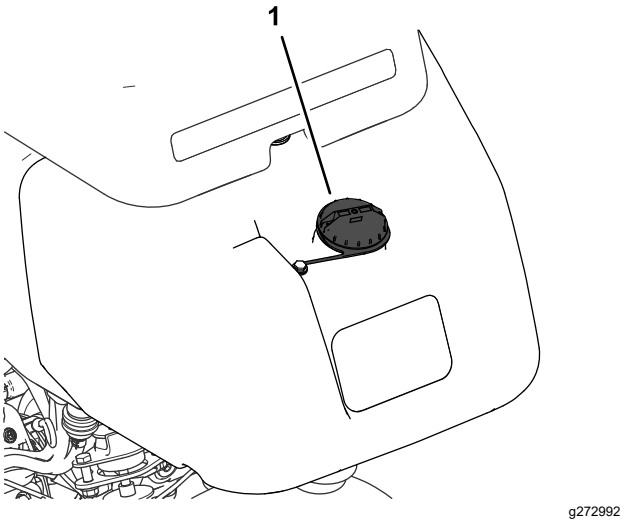

Figure 25

1. Fuel-tank cap

2. Add the specified fuel to the fuel tank until the level is 25 mm (1 inch) below the bottom of the filler neck. This space in the tank allows the fuel to expand.

   Important: **Do not fill the fuel tank completely full.**
3. Install the cap.

   Note: You will hear a click sound when the cap is secure.
4. Wipe up any spilled fuel.

Performing Daily Maintenance

Service Interval: Before each use or daily

Before starting the machine each day, perform the following procedures:

- Check the engine-oil level—refer to Checking the Engine Oil (page 37).
- Drain water from the fuel filter—refer to Draining Water from the Fuel Filter (page 39).
- Check the cooling system—refer to Cooling System Maintenance (page 44).
- Check the tire pressure—refer to Checking the Tire Pressure (page 42).
- Check the hydraulic-fluid level—refer to Checking the Hydraulic-Fluid Level (page 47).
- Check the reel-to-bedknife contact—refer to Checking the Reel-to-Bedknife Contact (page 52).

During Operation

During Operation Safety

General Safety

- The owner/operator can prevent and is responsible for accidents that may cause personal injury or property damage.
- Wear appropriate clothing, including eye protection; long pants; substantial, slip-resistant footwear, and hearing protection. Tie back long hair and do not wear loose clothing or loose jewelry.
- Do not operate the machine while ill, tired, or under the influence of alcohol or drugs.
- Use your full attention while operating the machine. Do not engage in any activity that causes distractions; otherwise, injury or property damage may occur.
- Before you start the engine, ensure that all drives are in neutral, the parking brake is engaged, and you are in the operating position.
- Do not carry passengers on the machine.
- Keep bystanders and children out of the operating area. If co-workers must be present, use caution and ensure that the grass baskets are installed on the machine.
- Operate the machine only in good visibility to avoid holes or hidden hazards.
- Avoid mowing on wet grass. Reduced traction could cause the machine to slide.
- Keep your hands and feet away from the cutting units.
- Look behind and down before backing up to be sure of a clear path.
- Use care when approaching blind corners, shrubs, trees, or other objects that may obscure your vision.
- Stop the cutting units whenever you are not mowing.
- Slow down and use caution when making turns and crossing roads and sidewalks with the machine. Always yield the right-of-way.
- Operate the engine only in well-ventilated areas. Exhaust gases contain carbon monoxide, which is lethal if inhaled.
- Do not leave a running machine unattended.
- Before you leave the operating position, do the following:
  - Park the machine on a level surface.
  - Lower the cutting units to the ground and ensure that they are disengaged.
  - Engage the parking brake.
  - Shut off the engine and remove the key.
  - Wait for all movement to stop.
- Operate the machine only in good visibility and appropriate weather conditions. Do not operate the machine when there is the risk of lightning.

Rollover Protection System (ROPS) Safety

- Do not remove any of the ROPS components from the machine.
- Ensure that the seat belt is attached and that you can release it quickly in an emergency.
- Always wear your seat belt.
- Check carefully for overhead obstructions and do not contact them.
- Keep the ROPS in safe operating condition by thoroughly inspecting it periodically for damage and keeping all the mounting fasteners tight.
- Replace all damaged ROPS components. Do not repair or alter them.

Slope Safety

- Slopes are a major factor related to loss of control and rollover accidents, which can result in severe injury or death. You are responsible for safe slope operation. Operating the machine on any slope requires extra caution.
- Evaluate the site conditions to determine if the slope is safe for machine operation, including surveying the site. Always use common sense and good judgment when performing this survey.
- Review the slope instructions, listed below, for operating the machine on slopes. Before you operate the machine, review the site conditions to determine whether you can operate the machine in the conditions on that day and at that site. Changes in the terrain can result in a change in slope operation for the machine.
- Avoid starting, stopping, or turning the machine on slopes. Avoid making sudden changes in speed or direction. Make turns slowly and gradually.
- Do not operate a machine under any conditions where traction, steering, or stability is in question.
- Remove or mark obstructions such as ditches, holes, ruts, bumps, rocks, or other hidden hazards. Tall grass can hide obstructions. Uneven terrain could overturn the machine.
- Be aware that operating the machine on wet grass, across slopes, or downhill may cause the machine to lose traction. Loss of traction to the drive wheels may result in sliding and a loss of braking and steering.

- Use extreme caution when operating the machine near drop-offs, ditches, embankments, water hazards, or other hazards. The machine could suddenly roll over if a wheel goes over the edge or the edge caves in. Establish a safety area between the machine and any hazard.
- Identify hazards at the base of the slope. If there are hazards, mow the slope with a pedestrian-controlled machine.
- If possible, keep the cutting units lowered to the ground while operating on slopes. Raising the cutting units while operating on slopes can cause the machine to become unstable.
- Use extreme caution with grass-collection systems or other attachments. These can change the stability of the machine and cause a loss of control.

Breaking in the Machine

Refer to the engine *Owner's Manual* supplied with the machine for oil change and maintenance procedures recommended during the break-in period.

Only 8 hours of operation is required for the break-in period.

Since the first hours of operation are critical to future dependability of the machine, monitor its functions and performance closely so that minor difficulties, which could lead to major problems, are noted and can be corrected. Inspect the machine frequently during break-in for signs of oil leakage, loose fasteners, or any other malfunction.

Starting the Engine

Important: **Do not use ether or other types of starting fluid.**

Note: You may need to bleed the fuel system before starting the engine if any of the following situations have occurred:

- Initial start up of a new engine
- The engine has ceased running due to lack of fuel.
- Maintenance has been performed upon fuel system components; ie. filter replaced, etc.

Refer to your engine owner's manual.

1. Sit on the seat, lock the parking brake, disengage the raise/lower mow control and move the functional-control lever to the NEUTRAL position.
2. Remove your foot from the traction pedal and make sure the pedal is in the NEUTRAL position.
3. Move the throttle lever to the SLOW position.
4. Insert the key into the switch and rotate it to the ON position. Hold it in the ON position until the glow-plug-indicator light goes off (approximately 6 seconds).
5. Turn the ignition key to the START position.

   Important: **To prevent overheating of the starter motor, do not engage the starter longer than 10 seconds. After 10 seconds of continuous cranking, wait 60 seconds before engaging the starter motor again.**
6. Release the key when the engine starts and allow it to move to the ON position.
7. Allow the engine to warm up for a few minutes before operating.

   Important: **When starting the engine for the first time or after an overhaul of the engine, operate the machine in forward and reverse for 1 to 2 minutes. Turn the steering wheel to the left and right to check the steering response. Then shut the engine off and wait for all moving parts to stop; refer to Shutting Off the Engine (page 27). Check for oil leaks, loose parts and any other noticeable malfunctions.**

Checking the Machine after Starting the Engine

1. Move the throttle lever to the FAST position.
2. Move the raise/lower mow control lever forward momentarily.

   The cutting units should lower and all the reels should rotate.

   Note: The function lever should be in the middle (mow) position for the reels run when lowering the cutting units
3. Move the raise/lower mow control lever rearward.

   The cutting reels should stop rotating and the cutting units should raise to the full transport position.
4. Engage the brake to keep the machine from moving, and operate the traction pedal through the forward and reverse positions.
5. Continue the above procedure for 1 or 2 minutes. Move the functional-control lever to the NEUTRAL position, engage the parking brake, and shut off the engine.
6. Check for fluid leaks and tighten the hydraulic fittings if any leaks are found.

   Note: When the machine is new and the bearings and reels are tight, it is necessary to use the FAST throttle-lever position for this

check. A fast throttle setting may not be required after the break-in period.

Note: If fluid leaks continue to appear, contact your authorized Toro distributor for assistance and, if necessary, replacement parts.

Important: **A trace of fluid on the motor or wheel seals is normal. Seals require a small amount of lubrication to perform properly.**

Shutting Off the Engine

1. Move the throttle lever to the SLOW position, pull back the raise/lower mow control, and move the functional-control lever to the NEUTRAL position.
2. Rotate the ignition key to the OFF position to shut off the engine. Remove the key from the switch to prevent accidental starting.
3. Close the fuel shut-off valve before storing the machine.

Checking the Safety-Interlock System

Service Interval: Before each use or daily

⚠ CAUTION

If the safety interlock switches are disconnected or damaged the machine could operate unexpectedly, causing personal injury.

- **Do not tamper with the interlock switches.**
- **Check the operation of the interlock switches daily and replace any damaged switches before operating the machine.**

The purpose of the safety-interlock system is to prevent operation of the machine where there is possible injury to you or damage to the machine.

The safety-interlock system prevents the engine from starting unless:

- The traction pedal is in the NEUTRAL position.
- The functional-control lever is in the NEUTRAL position.

The safety-interlock system prevents the machine from moving unless:

- The parking brake is disengaged.
- You are seated in the operator's seat.
- The functional-control lever is in the MOW position or the TRANSPORT position.

The safety-interlock system prevents the reels from operating unless the functional-control lever is in the MOW position.

Checking the Traction Pedal

Perform the following system checks daily to ensure that the interlock system is operating correctly:

1. Sit on the seat, move the traction pedal to the NEUTRAL position, move the functional-control lever to the NEUTRAL position, and engage the parking brake.
2. Try to move the traction pedal forward or backward.

   The pedal should not move, which indicates that the interlock system is operating correctly. Correct the problem if it is not operating properly.

Checking the Function Control

1. Sit on the seat, move the traction pedal to the NEUTRAL position, move the functional-control lever to the NEUTRAL position, and engage the parking brake.
2. Move the functional-control lever to the MOW position or the TRANSPORT position and try to start the engine.

   The engine should not turnover or start, which indicates that the interlock system is operating correctly. Correct the problem if it is not operating properly.
3. Sit on the seat, move the traction pedal to the NEUTRAL position, move the functional-control lever to the NEUTRAL position, and engage the parking brake.
4. Start the engine and move the functional-control lever to the MOW position or the TRANSPORT position.

   The engine should shut off, which indicates that the interlock system is operating correctly.

   Correct the problem if it is not operating properly.

Checking the Operator’s Presence Switch

1. Sit on the seat, move the traction pedal to the NEUTRAL position, move the functional control lever to the NEUTRAL position, and engage the parking brake.
2. Start the engine.
3. Release the parking brake, move the functional control lever to the MOW position, and rise from the seat.

The engine should shut off, which indicates that the interlock system is operating correctly. Correct the problem if it is not operating properly.

Checking the Raise/Lower Mow Control

1. Sit on the seat, move the traction pedal to the NEUTRAL position, move the functional control lever to the NEUTRAL position, and engage the parking brake.
2. Start the engine.
3. Move the raise/lower mow control forward to lower the cutting units. The cutting units should lower but not start rotating.

   If they start rotating, the interlock system is not operating correctly; correct the problem before operating the machine.

Driving the Machine without Mowing

- Ensure that the cutting units are fully raised.
- Move the functional-control lever to the TRANSPORT position.
- Use the brakes to slow the machine while going down steep hills to avoid loss of control.
- Always approach rough areas at a reduced speed and cross severe undulations carefully.
- Familiarize yourself with the width of the machine. Do not attempt to pass between objects that are close together to prevent costly damage and downtime.

Mowing the Green

Important: **If the leak detector alarm (if equipped on your model) sounds or you notice an oil leak while cutting on a green, immediately raise the cutting units, drive directly off the green, and stop the machine in an area away from the green. Determine the cause of the leak and correct the problem.**

Before mowing greens, find a clear area and practice performing basic machine functions (e.g., starting and stopping the machine, raising and lowering the cutting units, and turning).

Inspect the green for debris, remove the flag from the cup, and determine the best direction to mow. Base the direction to mow on the previous mowing direction. Always mow in an alternate pattern from the previous mowing so that the grass blades are less apt to lay down and therefore be difficult to trap between the reel blades and the bedknife.

Cutting the Green

1. Approach the green with the functional-control lever in the MOW position and the throttle at full speed.
2. Start on 1 edge of the green so that you can use the ribbon procedure of cutting.

   Note: This holds compaction to a minimum and leaves a neat, attractive pattern on the greens.
3. Push forward the raise/lower mow lever as the front edges of the grass baskets cross the outer edge of the green.

   Note: This procedure drops the cutting units to the turf and starts the reels.

   Important: **The center cutting unit drops and raises slightly after the front cutting units do; therefore, you should practice**

gaining the required timing necessary to minimize the cleanup mowing operation.

Note: The delay in raising and lowering the center cutting unit depends on hydraulic fluid temperature. Cold hydraulic fluid results in a longer delay. As the fluid temperature increases, the delay time becomes shorter.

4. Overlap a minimal amount with the previous cut on return passes.

   Note: To assist in maintaining a straight line across the green and keeping the machine an equal distance from the edge of the previous cut, imagine a sight line approximately 1.8 to 3 m (6 to 10 ft) ahead of the machine to the edge of the uncut portion of the green (Figure 27). Include the outer edge of the steering wheel as part of the sight line; i.e., keep the steering wheel edge aligned with a point that is always kept the same distance away from the front of the machine.

5. As the front edges of the baskets cross the edge of the green, pull back the raise/lower mow lever rearward and hold it until all the cutting units have risen. This stops the reels and lifts the cutting units.

   Important: **Time this step correctly so that you do not cut into the fringe area, yet cut as much of the green as possible to minimize the amount of grass left to mow around the outer periphery.**

6. To cut down on operating time and to ease the lineup for the next pass, momentarily turn the machine in the opposite direction, then turn it in the direction of the uncut portion. This movement is a tear-shaped turn (Figure 26), which quickly lines the machine up for your next pass.

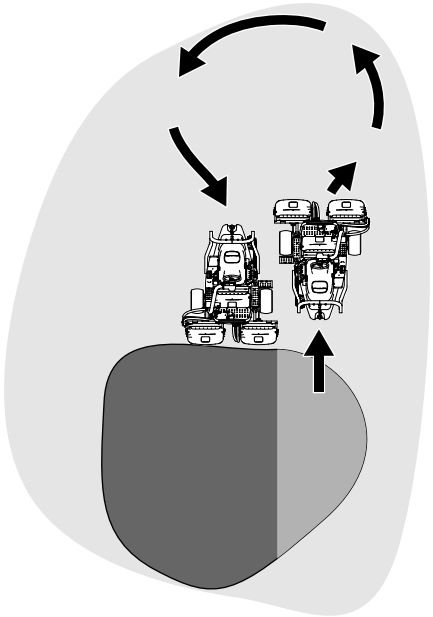

g229671

Figure 26

Note: Try to make as short of a turn as possible, except during warmer weather—a wider arc minimizes the turf bruising.

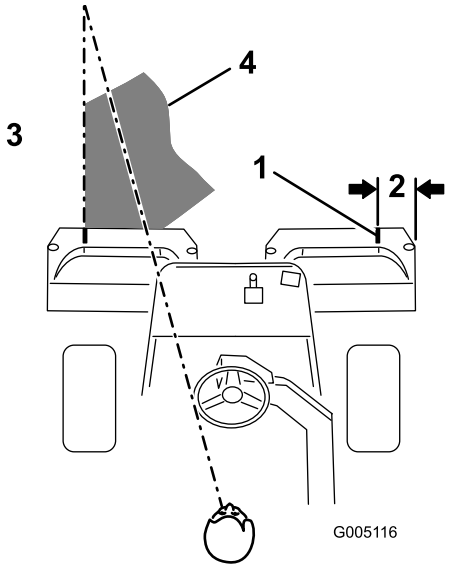

g005116

Figure 27

1. Alignment strip
2. Approximately 12.7 cm (5 inches)
3. Cut grass on the left.
4. Keep a focal spot 2 to 3 m (6 to 10 ft) ahead of the machine.

Note: The steering wheel does not return to its original position after you complete a turn.

Important: **Never stop the machine on a green while the cutting units are engaged, as damage to the turf may result. Stopping the machine on a wet green may leave marks or indentations from the wheels.**

Cutting the Periphery and Finishing the Job

1. Finish cutting the green by mowing the outer periphery. Change the direction of cutting from the previous mowing.

   Note: Use the throttle lever to adjust the machine speed when you cut the periphery. This will match the clip to the green and may reduce triplex ring.

   Note: Always keep weather and turf conditions in mind and be sure to change the direction of mowing from the previous cutting.

2. When finished mowing the outer periphery, tap the raise/lower mow lever rearward to stop the reels, then drive off the green. When all the cutting units are off the green, raise the cutting units.

   Note: This step minimizes grass clumps left on the green.

3. Replace the flag.

4. Empty the grass baskets of all clippings before you transport the machine to the next green.

   Note: Heavy wet clippings place an undue strain on the baskets and add unnecessary weight to the machine, which increases the load on the machine systems (e.g., engine, hydraulic system, and brakes).

After Operation

After Operation Safety

General Safety

- Engage the parking brake, shut off the engine, remove the key, and wait for all movement to stop before you leave the operator's position. Allow the machine to cool before adjusting, servicing, cleaning, or storing it.
- Clean grass and debris from the cutting units and drives to help prevent fires. Clean up oil or fuel spills.
- Shut off the fuel while storing or hauling the machine.
- Disengage the drive to the attachment whenever you are hauling or not using the machine.
- Allow the machine to cool before storing the machine in any enclosure.
- Maintain and clean the seat belt(s) as necessary.
- Do not store the machine or fuel container where there is an open flame, spark, or pilot light, such as on a water heater or on other appliances.

Towing Safety

- Tow only with a machine that has a hitch designed for towing. Do not attach towed equipment except at the hitch point.
- Follow the manufacturer's recommendation for weight limits for towed equipment and towing on slopes. On slopes, the weight of the towed equipment may cause loss of traction and loss of control.
- Never allow children or others in or on towed equipment.
- Travel slowly and allow extra distance to stop when towing.

Inspecting and Cleaning after Mowing

After mowing, thoroughly wash the machine with a garden hose without a nozzle so that excessive water pressure does not contaminate and damage the seals and bearings. **Do not wash a warm engine or the electrical connections with water.**

Important: **Do not use brackish or reclaimed water to clean the machine.**

Important: **Do not use power-washing equipment to wash the machine. Power-washing equipment may damage the electrical system, loosen important decals, or wash away necessary grease at friction points. Avoid excessive use of water near the control panel, engine, and battery.**

Important: **Do not wash the machine with the engine running. Washing the machine with the engine running may result in internal engine damage.**

After cleaning the machine, do the following:

- Inspect the machine for possible hydraulic fluid leaks, damage or wear to hydraulic and mechanical components.
- Inspect the cutting units for sharpness.
- Lubricate the brake-shaft assembly with SAE 30 oil or spray lubricant to deter corrosion and help keep the machine performing satisfactorily during the next mowing operation.

Hauling the Machine

- Use care when loading or unloading the machine into a trailer or a truck.
- Use a full-width ramp for loading the machine into a trailer or a truck.
- Tie the machine down securely using straps, chains, cable, or ropes. Both front and rear straps should be directed down and outward from the machine (Figure 28).

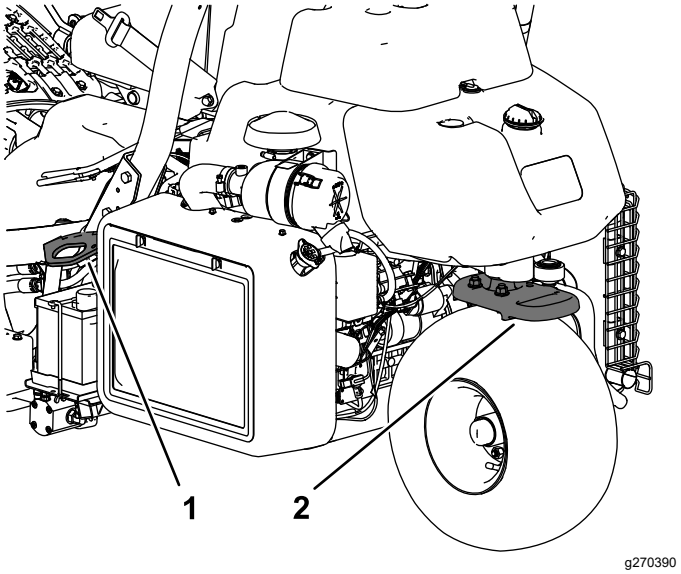

Figure 28

1. Tie-down loop (each side)
2. Rear tie-down loop

Towing the Machine

In case of an emergency, you can tow the machine for up to 0.4 km (1/4 mile).

Important: **Do not tow the machine faster than 3 to 5 km/h (2 to 3 mph) to avoid damaging the drive system. If you must move the machine more than 0.4 km (1/4 mile), transport it on a truck or trailer.**

1. Locate the bypass valve on the pump and rotate it so that the slot is vertical (Figure 29).

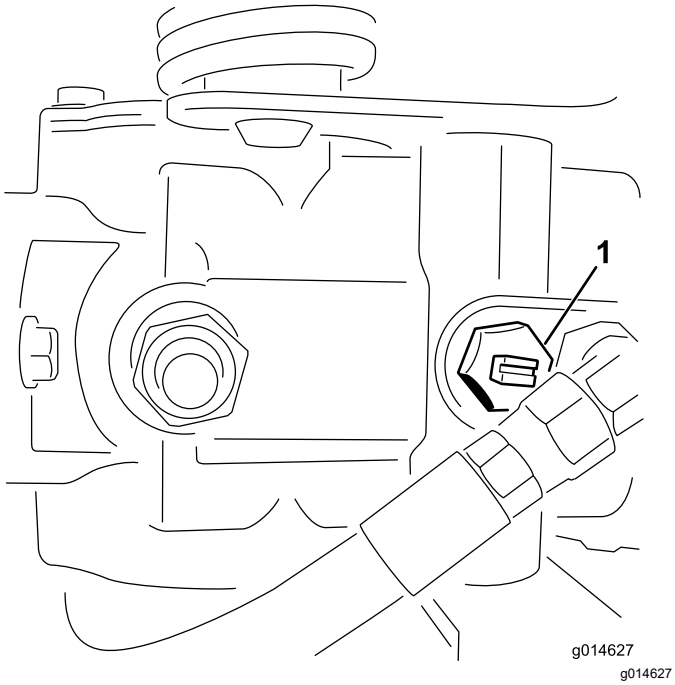

Figure 29

1. Bypass valve-slot shown in closed (horizontal) position

2. Before starting the engine, close the bypass valve by rotating it so that the slot is horizontal (Figure 29).

   Important: **Do not start the engine when the bypass valve is open.**

Maintenance

⚠ CAUTION

Failure to properly maintain the machine could result in premature failure of machine systems causing possible harm to you or bystanders.

Keep the machine well maintained and in good working order as indicated in these instructions.

Note: Determine the left and right sides of the machine from the normal operating position.

Note: Download a free copy of the electrical or hydraulic schematic by visiting www.Toro.com and searching for your machine from the Manuals link on the home page.

Important: **Refer to your engine owner's manual for additional maintenance procedures.**

⚠ WARNING

If you leave the key in the ignition switch, someone could accidently start the engine and seriously injure you or other bystanders.

Remove the key from the ignition and disconnect the wires from the spark plugs before you do any maintenance. Set the wires aside so that they do not accidentally contact the spark plugs.

Maintenance Safety

- Before you leave the operator's position, do the following:
  - Park the machine on a level surface.
  - Disengage the cutting unit(s).
  - Engage the parking brake.
  - Shut off the engine and remove the key.
  - Wait for all movement to stop.
- Allow machine components to cool before performing maintenance.
- If possible, do not perform maintenance while the engine is running. Keep away from moving parts.
- Support the machine with jack stands whenever you work under the machine.
- Carefully release pressure from components with stored energy.
- Keep all parts of the machine in good working condition and all hardware tightened.
- Replace all worn or damaged decals.
- To ensure safe, optimal performance of the machine, use only genuine Toro replacement parts. Replacement parts made by other manufacturers could be dangerous, and such use could void the product warranty.

Recommended Maintenance Schedule(s)

Maintenance Service Interval	Maintenance Procedure
After the first hour	• Torque the wheel nuts.
After the first 8 hours	• Check the tension on the alternator belt.
After the first 10 hours	• Torque the wheel nuts.
After the first 50 hours	• Change the engine oil and filter. • Check the engine speed (at idle and full throttle).
Before each use or daily	• Inspect the seat belt(s) for wear, cuts, and other damage. Replace the seat belt(s) if any component does not operate properly. • Check the safety-interlock system • Check the safety-interlock system. • Inspect and cleanup after mowing. • Check the engine oil. • Drain water from the fuel filter. • Check the tire pressure. • Clean the radiator screen. Clean it hourly if conditions are extremely dusty and dirty. • Check the engine-coolant level. • Check the hydraulic-fluid level. • Check the hydraulic lines and hoses. • Check the reel-to-bedknife contact.
Every 50 hours	• Check the battery electrolyte level. (If the machine is in storage, check the electrolyte level every 30 days.) • Check the battery cable connections.
Every 100 hours	• Change the engine oil and filter.
Every 200 hours	• Service the air-cleaner filter (more frequently when operating conditions are dusty or dirty). • Torque the wheel nuts.
Every 400 hours	• Grease the machine.
Every 500 hours	• Replace the fuel filter.
Every 800 hours	• If you are not using the recommended hydraulic fluid or have ever filled the reservoir with an alternative fluid, change the hydraulic fluid, filter, and tank breather. • Check the engine speed (at idle and full throttle). • Check the valve clearance.
Every 1,000 hours	• If you are using the recommended hydraulic fluid, change the hydraulic-fluid filter.
Every 2,000 hours	• If you are using the recommended hydraulic fluid, change the hydraulic fluid.
Yearly	• Burnish the brakes.
Every 2 years	• Check the fuel lines and connections. • Replace moving hoses. • Drain and flush the cooling system.

Daily Maintenance Checklist

Duplicate this page for routine use.

Maintenance Check Item	For the week of:						
	Mon.	Tues.	Wed.	Thurs.	Fri.	Sat.	Sun.
Check the safety-interlock operation.							
Check the instrument operation.							
Check the brake operation.							
Check/empty the fuel filter/water separator.							
Check the fuel level.							
Check the hydraulic-fluid level.							
Check the engine-oil level.							
Clean the screen and radiator.							
Inspect the air filter.							
Check any unusual engine noises.							
Check the reel-to-bedknife adjustment.							
Check the hydraulic hoses for damage.							
Check for fluid leaks.							
Check the tire pressure.							
Check the height-of-cut adjustment.							
Touch-up damaged paint.							
Wash the unit							

Notation for Areas of Concern

Inspection performed by:		
Item	Date	Information

Lubrication

Greasing the Machine

Service Interval: Every 400 hours

Lubricate the grease fitting with No. 2 lithium grease.

1. Wipe the grease fitting clean so that you do not force foreign matter into the bearing or bushing (Figure 30).

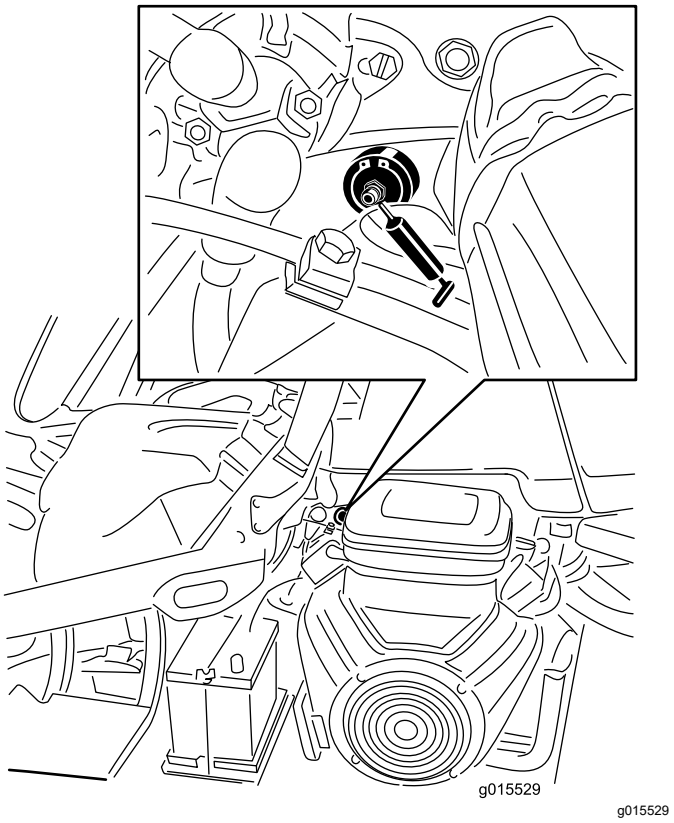

Figure 30

Left side of the gasoline model shown; your model may vary

2. Pump grease into the bearing or bushing until the grease is visible. Wipe up excess grease.

Engine Maintenance

Engine Safety

- Shut off the engine before checking the oil or adding oil to the crankcase.
- Do not change the governor speed or overspeed the engine.

Servicing the Air Cleaner

Service Interval: Every 200 hours—Service the air-cleaner filter (more frequently when operating conditions are dusty or dirty).

- Check the air-cleaner body for damage which could cause an air leak; replace it if it is damaged. Check the whole intake system for leaks, damage, or loose hose clamps.
- Changing the air filter before it is necessary increases the chance of dirt entering the engine when the filter is removed.
- Ensure that the cover is seated correctly and seals with the air cleaner body.

1. Release the latches securing the air-cleaner cover to the air-cleaner body (Figure 31).

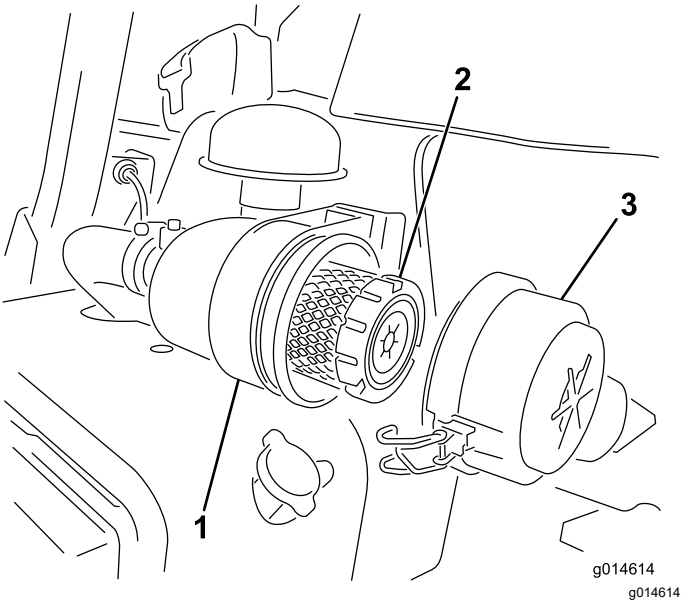

Figure 31

1. Air-cleaner body
2. Air filter
3. Air-cleaner cover

2. Remove the cover from the air-cleaner body.
3. Before removing the filter, use low pressure air (275 kPa (40 psi), clean and dry) to help remove large accumulations of debris packed between the outside of the primary filter and the canister. This cleaning process prevents debris getting

into the intake when you remove the primary filter.

Important: **Avoid using high-pressure air that could force dirt through the filter into the intake tract.**

4. Remove and replace the primary filter, as follows:

   Important: **Do not clean the used element.**

   A. Inspect the new filter for shipping damage; **do not use a damaged element.**

   B. Carefully pull the old filter out of the filter body and discard it.

   C. Insert the new filter by applying pressure to the outer rim of the element to seat it in the canister, checking the sealing end of the filter and the body.

   Important: **Do not apply pressure to the flexible center of the filter.**

5. Clean the dirt ejection port located in the removable cover. Remove the rubber outlet valve from the cover, clean the cavity and replace the outlet valve.
6. Install the cover orienting the rubber outlet valve in a downward position—between approximately 5 o'clock to 7 o'clock when viewed from the end.
7. Secure the latches (Figure 31).

Servicing the Engine Oil

Checking the Engine Oil

Service Interval: Before each use or daily

The engine is shipped with 3.7 L (3.9 US qt) (with filter) of oil in the crankcase; however, you must check the oil level before and after starting the engine the first time.

Use high-quality engine oil that meets the following specifications:

- API Classification Level Required: CH–4, CI–4 or higher.
- Preferred oil: SAE 10W–30
- Alternate oil: SAE 15W–40

Toro Premium Engine oil is available from your distributor in the 10W–30 viscosity. See the *Parts Catalog* for part numbers.

Note: The best time to check the engine oil is when the engine is cool before it has been started for the day. If it has already been run, allow the oil to drain back down to the sump for at least 10 minutes before checking. If the oil level is at or below the Add mark on the dipstick, add oil to bring the oil level to the FULL mark. **Do not overfill**.

Important: **Keep the engine oil level between the upper and lower limits on the oil gauge; the engine may fail if you run it with too much or too little oil.**

1. Position the machine on a level surface.
2. Remove the dipstick and wipe it with a clean rag (Figure 33).

   Important: **Remove the dipstick while filling the engine with oil. When adding engine oil or filling oil, there *must be* clearance between the oil fill device and the oil fill hole in the valve cover as shown in Figure 32. This clearance is necessary to permit venting when filling, which prevents the oil from overrunning into the breather.**

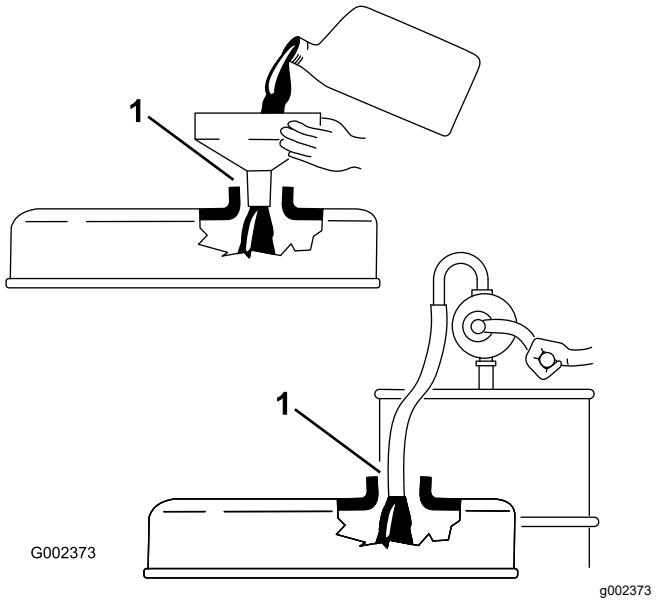

Figure 32

1. Note clearance

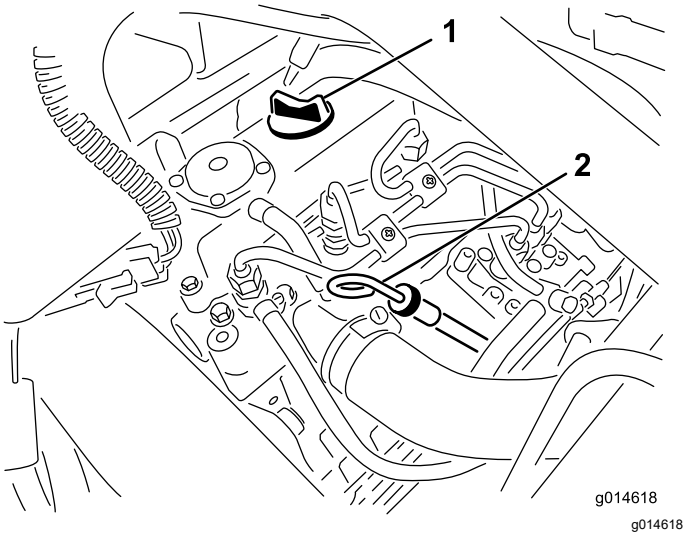

Figure 33

1. Filler cap
2. Dipstick

3. Push the dipstick into the tube and make sure it is seated fully.
4. Remove the dipstick from the tube and check the oil level

   Note: If the oil level is low, remove the filler cap from the valve cover and **slowly** add enough oil to raise the level to the FULL mark on the dipstick.

   Add the oil slowly and check the level often during this process. **Do not overfill.**
5. Replace the dipstick.
6. Start and run the engine at idle for 30 seconds, then shut the engine off. Wait 30 seconds, then repeat steps 2 through 5.
7. Install the filler cap and dipstick firmly in place.

Changing the Engine Oil and Filter

Service Interval: After the first 50 hours

Every 100 hours

1. Remove the drain plug and let oil flow into a drain pan. When the oil stops, install the drain plug (Figure 34).

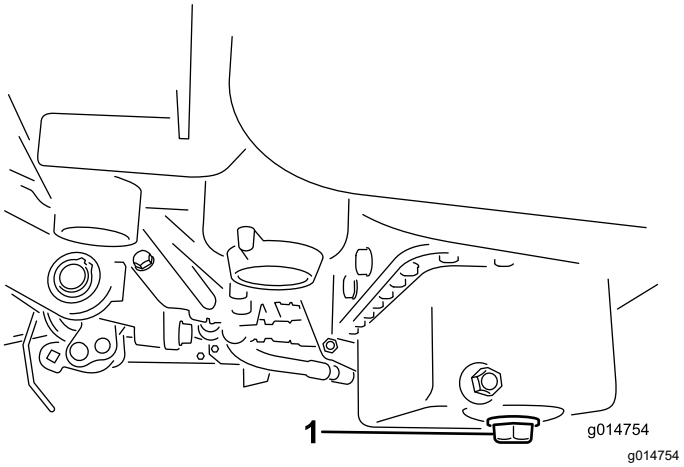

Figure 34

1. Drain plug

2. Remove the oil filter (Figure 35). Apply a light coat of clean oil to the new filter gasket.

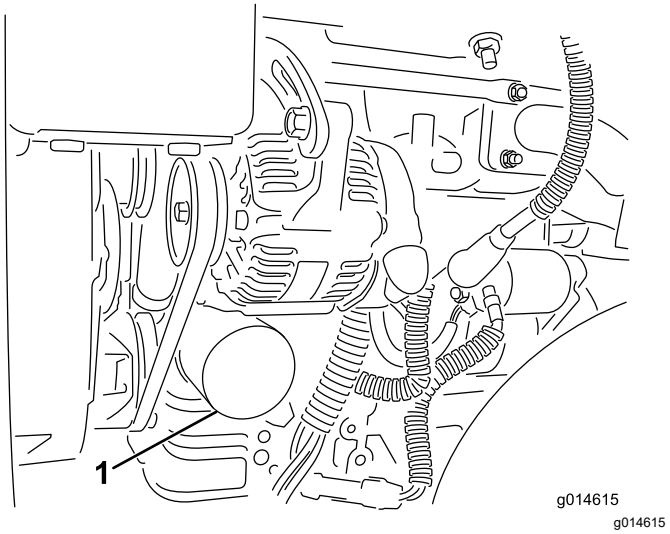

Figure 35

1. Oil filter

3. Screw the filter on by hand until the gasket contacts the filter adapter, then tighten 1/2 to 3/4 turn further. **Do not overtighten**.
4. Add oil to the crankcase; refer to Checking the Engine Oil (page 37).
5. Dispose of the used oil properly.

Fuel System Maintenance

Draining Water from the Fuel Filter

Service Interval: Before each use or daily

1. Park the machine on a level surface and shut off the engine.
2. Place a drain pan under the fuel filter.
3. Open the drain plug on the fuel filter approximately one turn and drain any accumulated water (Figure 36).

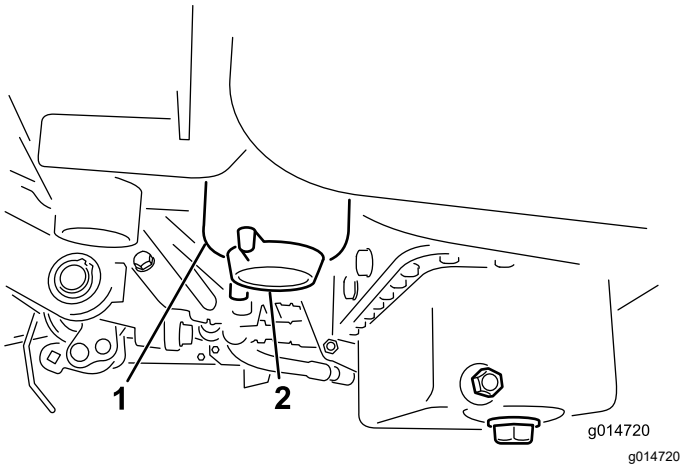

Figure 36

1. Fuel filter
2. Drain plug

4. Tighten the plug after draining.

   Note: Because the accumulated water will be mixed with diesel fuel, drain the fuel filter into a suitable container and dispose of it properly.

Replacing the Fuel Filter/Water Separator

Service Interval: Every 500 hours

1. Close the fuel-shutoff valve (Figure 37) below the fuel tank.

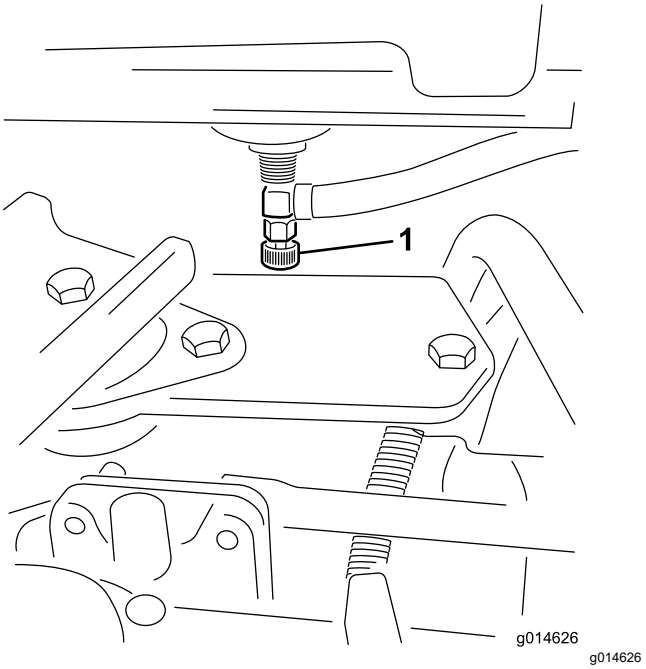

Figure 37

1. Fuel-shutoff valve

2. Clean the area where the filter canister mounts (Figure 38).
3. Place a drain pan under the fuel filter.
4. Open the filter drain plug (Figure 38).

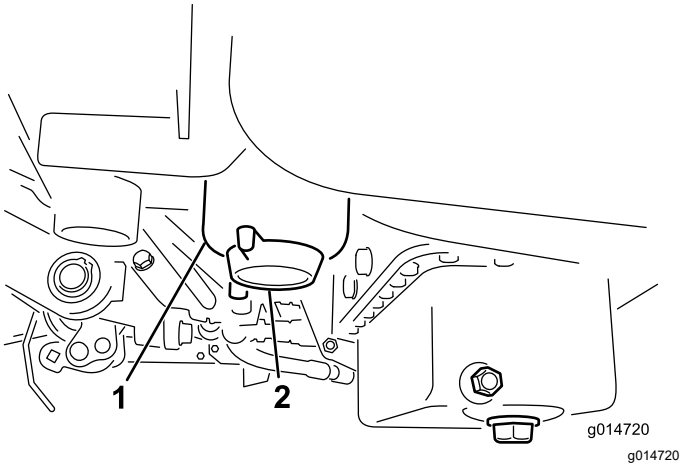

Figure 38

1. Fuel filter/water separator canister
2. Filter-drain plug

5. Unscrew the filter canister and dispose of it according to local regulations.

6. Screw the filter on by hand until the gasket contacts the filter adapter, then tighten 1/2 to 3/4 turn further.
7. Ensure that the filter-drain plug is closed. Open the fuel-shutoff valve.

Inspecting the Fuel Lines and Connections

Service Interval: Every 2 years

Inspect the fuel lines for deterioration, damage, or loose connections.

Electrical System Maintenance

Electrical System Safety

- Disconnect the battery before repairing the machine. Disconnect the negative terminal first and the positive last. Connect the positive terminal first and the negative last.
- Charge the battery in an open, well-ventilated area, away from sparks and flames. Unplug the charger before connecting or disconnecting the battery. Wear protective clothing and use insulated tools.

Servicing the Battery

Service Interval: Every 50 hours (If the machine is in storage, check the electrolyte level every 30 days.)

Properly maintain the battery electrolyte and keep the top of the battery clean. Store the machine in a cool place to prevent the battery from running down.

The battery cables must be tight on the terminals to provide good electrical contact.

⚠ DANGER

Battery electrolyte contains sulfuric acid, which can be fatal if consumed and causes severe burns.

- **Do not drink electrolyte and avoid contact with skin, eyes or clothing. Wear safety glasses to shield your eyes and rubber gloves to protect your hands.**
- **Fill the battery where clean water is always available for flushing the skin.**

1. Check the electrolyte level in the cells of the battery.
2. If needed, add distilled or demineralized water into the cell of the battery.

   Note: Only raise the electrolyte level to the bottom of the split ring inside each cell.
3. Clean the top of the battery by washing it periodically with a brush dipped in ammonia or bicarbonate of soda solution.
4. Flush the top surface of the battery with water after cleaning it.

   Important: **Do not remove the fill caps while cleaning the battery.**

⚠ WARNING

Incorrect battery cable routing could damage the tractor and cables, causing sparks. Sparks can cause the battery gasses to explode, resulting in personal injury.

- **Always disconnect the negative (black) battery cable before disconnecting the positive (red) cable.**
- **Always connect the positive (red) battery cable before connecting the negative (black) cable.**

If corrosion occurs at the terminals, disconnect the cables, negative (-) cable first, and scrape the clamps and terminals separately. Connect the cables, positive (+) cable first, and coat the terminals with petroleum jelly.

Locating the Fuses

The fuses in the electrical system are located under the seat (Figure 39).

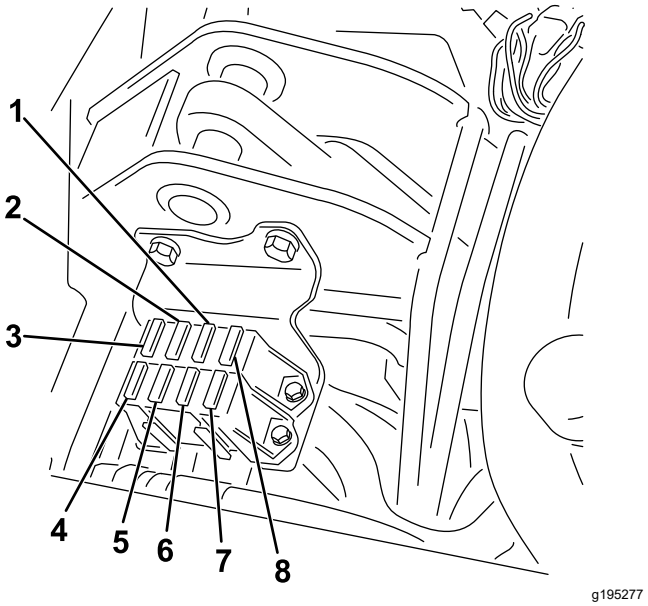

Figure 39

1. Diagnostic lights, and glow—7.5 A
2. Reel engage, lift/lower, fan—7.5 A
3. Lift reel, E-reel enable, and over temp—7.5 A
4. No fuse
5. Lights and leak detector—15 A
6. System—10 A
7. Ignition switch and start/run—10 A
8. ECM logic and power—2 A

The fuses for the E-reel wire harness are located under the right side-cover, below the console (Figure 40).

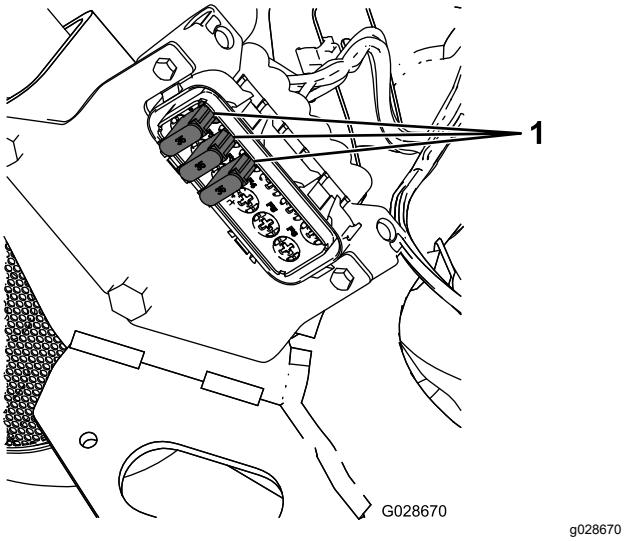

Figure 40

1. Fuses—35 A

Jump-Starting the Machine

If you need to jump start the machine, you can use the alternate-positive post (located on the starter solenoid) instead of the positive battery post (Figure 41).

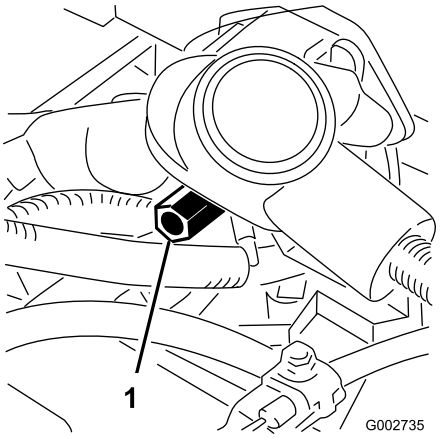

g002735

Figure 41

1. Alternate-positive post

Drive System Maintenance

Checking the Tire Pressure

Service Interval: Before each use or daily

Vary the tire pressure for all 3 wheels, depending upon your turf conditions, from a minimum of 83 to a maximum of 110 kPa (12 psi to 16 psi).

Checking the Torque of the Wheel Nuts

Service Interval: After the first hour

After the first 10 hours

Every 200 hours

⚠ WARNING

Failure to maintain proper torque of the wheel nuts could result in personal injury.

Torque the wheel nuts to the specified torque at the specified intervals.

Wheel nut torque specification: 95 to 122 N·m (70 to 90 ft-lb)

Note: To ensure even distribution, torque the wheel nuts in a X pattern.

Adjusting the Transmission for Neutral

If the machine creeps when the traction-control pedal is in the NEUTRAL position, adjust the neutral-return mechanism.

1. Ensure that the bypass valve is closed.
2. Lift the machine and support it at the frame so that 1 of the front wheels is off the floor.

   Note: If the machine is equipped with a 3-Wheel Drive Kit, also raise and block the rear wheel.
3. Start the engine, move the throttle to the SLOW position, and ensure that the front wheel that is off the floor is not rotating.
4. If the wheel is rotating, shut off the engine and proceed as follows:

   A. Loosen the nut securing the eccentric to the top of the hydrostat (Figure 42).

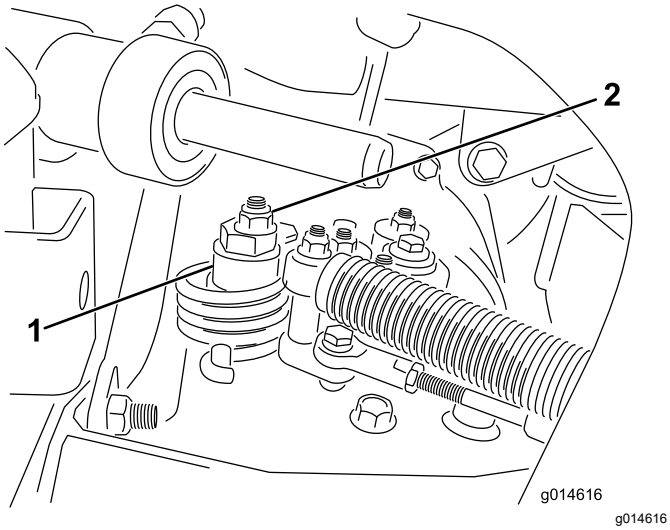

Figure 42

1. Eccentric
2. Locknut

B. Move the functional-control lever to the NEUTRAL position and the throttle to the SLOW position. Start the engine.

C. Rotate the eccentric until creep does not occur in either direction. When the wheel stops rotating, tighten the nut locking the eccentric and the adjustment (Figure 42). Verify the adjustment with the throttle in the SLOW and FAST position.

Note: If the wheel still turns when the eccentric is at the maximum adjustment, contact your authorized Toro distributor or refer to the *Service Manual* for further adjustment.

Adjusting the Transport Speed

Obtaining the Maximum Transport Speed

The traction pedal comes adjusted for maximum-transport speed, but you may need to adjust it if the pedal reaches full stroke before it contacts the pedal stop, or if you want to a decrease the transport speed.

To obtain the maximum-transport speed, put the functional control lever in the TRANSPORT position and press down on the traction pedal. If the pedal contacts the stop (Figure 43) before you feel tension on the cable, perform the following adjustment procedure:

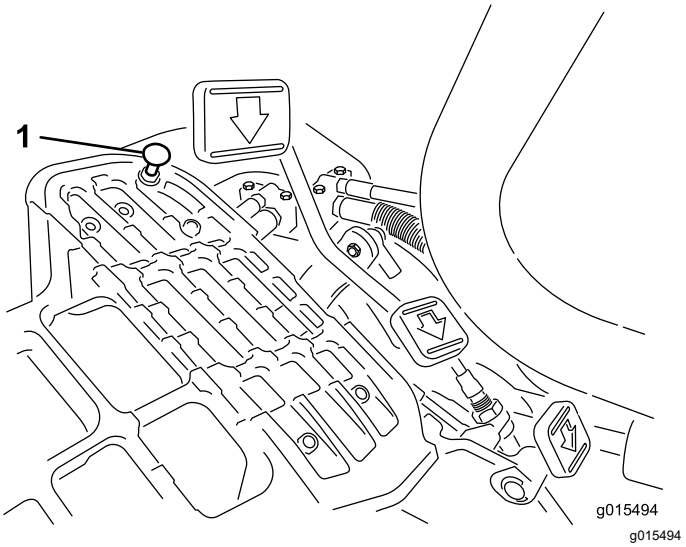

Figure 43

1. Pedal stop

1. Put the functional-control lever in the TRANSPORT position and loosen the locknut securing the pedal stop to the floor plate (Figure 43).
2. Tighten the pedal stop until it does not contact the traction pedal.
3. Continue applying a light load on the transport pedal and adjust the pedal stop so it contacts the pedal rod and tighten the nuts.

Important: **Ensure that the tension on the cable is not excessive or you will reduce the cable life.**

Reducing the Transport Speed

1. Press down on the traction pedal and loosen the locknut securing the pedal stop to the floor plate.
2. Loosen the pedal stop until you obtain the desired transport speed.
3. Tighten the locknut securing the pedal stop.

Adjusting the Mowing Speed

The mow speed is set to 3.8 mph at the factory.

You can adjust the forward moving speed from 0 to 8 km/h (0 to 5 mph).

1. Loosen the jam nut on the trunnion bolt (Figure 44).
2. Loosen the nut securing the lock and mow brackets on the pedal pivot.

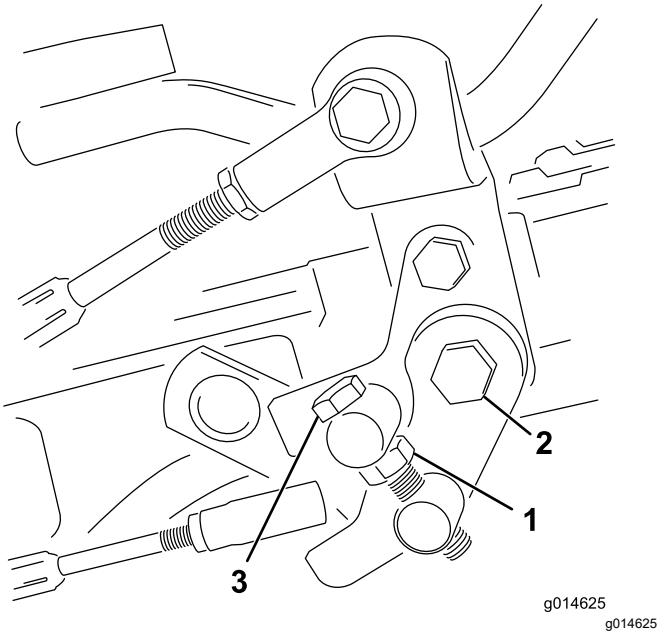

Figure 44

1. Jam nut
2. Nut
3. Trunnion bolt

3. Rotate the trunnion bolt clockwise to reduce the mowing speed and counterclockwise to increase the mowing speed.
4. Tighten the jam nut on the trunnion bolt and the nut on the pedal pivot to lock the adjustment (Figure 44). Check the adjustment and adjust as required.

Cooling System Maintenance

Cooling System Safety

- Swallowing engine coolant can cause poisoning; keep out of reach from children and pets.
- Discharge of hot, pressurized coolant or touching a hot radiator and surrounding parts can cause severe burns.
  - Always allow the engine to cool at least 15 minutes before removing the radiator cap.
  - Use a rag when opening the radiator cap, and open the cap slowly to allow steam to escape.

Cleaning the Radiator Screen

Service Interval: Before each use or daily Clean it hourly if conditions are extremely dusty and dirty.

To prevent the system from overheating, keep the radiator screen and radiator clean. Check and clean the screen and radiator daily or, if necessary, hourly. Clean these components more frequently in dusty, dirty conditions.

1. Remove the radiator screen (Figure 45).

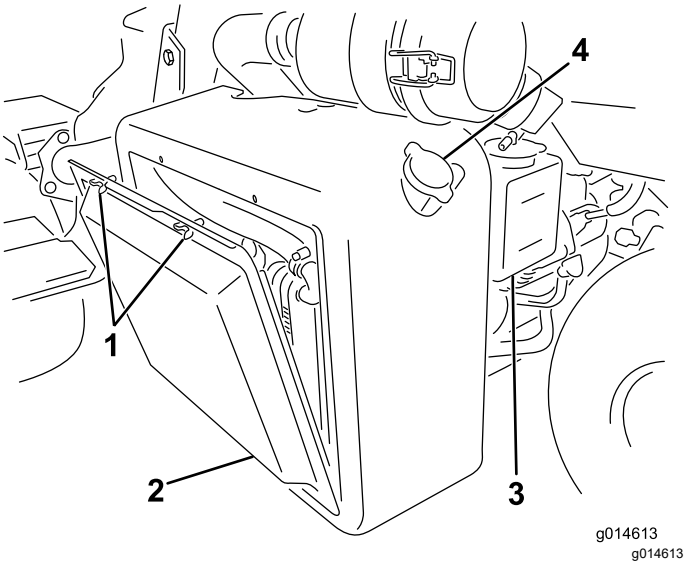

Figure 45

1. Wing bolts
2. Radiator screen
3. Reserve tank
4. Radiator cap

2. Working from the fan side of the radiator, blow out the radiator with compressed air.
3. Clean the screen and install it.

Checking the Engine-Coolant Level

The capacity of the cooling system is approximately 4.6 L (4.9 US qt).

Fill the cooling system with a 50/50 solution of water and permanent ethylene glycol antifreeze. Check the level of the coolant at the beginning of each day before starting the engine.

⚠ CAUTION

If the engine has been running, the pressurized, hot coolant can escape and cause burns.

- **Do not open the radiator cap when the engine is running.**
- **Use a rag when opening the radiator cap, and open the cap slowly to allow steam to escape.**

1. Park the machine on a level surface.
2. Check the coolant level (Figure 45 and Figure 46).

   It should be between the lines on the reserve tank when the engine is cold.

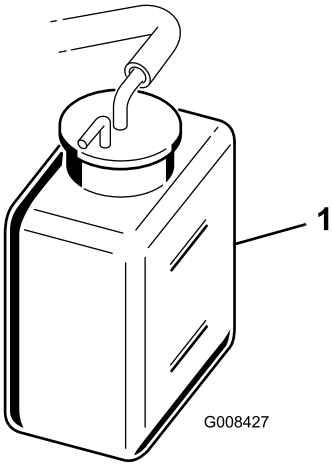

g008427

Figure 46

1. Reserve tank

3. If the coolant is low, remove the reserve tank cap and add a 50/50 mixture of water and permanent ethylene glycol antifreeze. **Do not overfill.**
4. Install the reserve-tank cap.

Brake Maintenance

Burnishing the Brakes

Service Interval: Yearly

Firmly apply the brakes and drive the machine at mowing speed until the brakes are hot, as indicated by their smell. You may need to adjust the brakes after the break-in period; refer to Adjusting the Brakes (page 45).

Adjusting the Brakes

If the brake fails to hold the machine while parked, you can adjust the brakes using the bulkhead fitting near the brake drum; contact your Authorized Service Dealer or refer to the *Service Manual* for more information.

Note: Burnish the brakes annually; refer to Burnishing the Brakes (page 45).

Belt Maintenance

Adjusting the Alternator Belt

Service Interval: After the first 8 hours

Ensure that the belt is properly tensioned to ensure proper operation of the machine and prevent unnecessary wear.

1. Park the machine on a level surface, shut off the engine, engage the parking brake, remove the key, and wait for all moving parts to stop.
2. Apply moderate thumb pressure to the belt between the pulleys (10 kg or 22 lb). The belt should deflect 7 to 9 mm (0.28 to 0.35 inch). If not, complete the following procedure to adjust the belt tension:

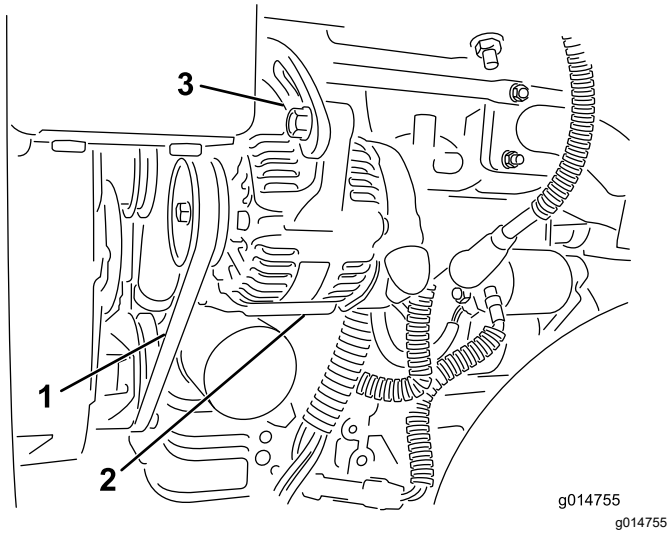

Figure 47

1. Alternator belt—apply pressure here
2. Alternator
3. Adjusting strap

A. Loosen the bolts securing the alternator to the engine and adjusting strap.

B. Inspect the belt for wear or damage and replace if it is worn.

C. Using a lever placed between the alternator and the engine block, pull the alternator out to obtain the correct belt tension and tighten the bolts.

Hydraulic System Maintenance

Hydraulic System Safety

- Seek immediate medical attention if fluid is injected into skin. Injected fluid must be surgically removed within a few hours by a doctor.
- Ensure that all hydraulic-fluid hoses and lines are in good condition and all hydraulic connections and fittings are tight before applying pressure to the hydraulic system.
- Keep your body and hands away from pinhole leaks or nozzles that eject high-pressure hydraulic fluid.
- Use cardboard or paper to find hydraulic leaks.
- Safely relieve all pressure in the hydraulic system before performing any work on the hydraulic system.

Servicing the Hydraulic Fluid

Important: **Regardless of the hydraulic fluid type used, any machine used for mowing fairways, verticutting, or used during ambient temperatures above 29°C (85°F) should have the Oil Cooler Kit (Part No. 117-9314) installed.**

Hydraulic Fluid Specifications

The reservoir is filled at the factory with high-quality hydraulic fluid. Check the level of the hydraulic fluid before you first start the engine and daily thereafter; refer to Checking the Hydraulic-Fluid Level (page 47).

Recommended hydraulic fluid: Toro PX Extended Life Hydraulic Fluid; available in 19 L (5 US gallon) pails or 208 L (55 US gallon) drums.

Note: A machine using the recommended replacement fluid requires less frequent fluid and filter changes.

Alternative hydraulic fluids: If Toro PX Extended Life Hydraulic Fluid is not available, you may use another conventional, petroleum-based hydraulic fluid having specifications that fall within the listed range for all the following material properties and that it meets industry standards. Do not use synthetic fluid. Consult with your lubricant distributor to identify a satisfactory product.

Note: Toro does not assume responsibility for damage caused by improper substitutions, so use products only from reputable manufacturers who will stand behind their recommendation.

High Viscosity Index/Low Pour Point Anti-wear Hydraulic Fluid, ISO VG 46

Material Properties:

Viscosity, ASTM D445	cSt @ 40°C (104°F) 44 to 48
Viscosity Index ASTM D2270	140 or higher
Pour Point, ASTM D97	-37°C to -45°C (-34°F to -49°F)
Industry Specifications:	Eaton Vickers 694 (I-286-S, M-2950-S/35VQ25 or M-2952-S)

Note: Many hydraulic fluids are almost colorless, making it difficult to spot leaks. A red dye additive for the hydraulic fluid is available in 20 ml (0.67 fl oz) bottles. A bottle is sufficient for 15 to 22 L (4 to 6 US gallons) of hydraulic fluid. Order Part No. 44-2500 from your authorized Toro distributor.

Important: **Toro Premium Synthetic Biodegradable Hydraulic Fluid is the only synthetic biodegradable fluid approved by Toro. This fluid is compatible with the elastomers used in Toro hydraulic systems and is suitable for a wide-range of temperature conditions. This fluid is compatible with conventional mineral oils, but for maximum biodegradability and performance, the hydraulic system should be thoroughly flushed of conventional fluid. The oil is available in 19 L (5 US gallons) pails or 208 L (55 US gallons) from your authorized Toro distributor.**

Checking the Hydraulic-Fluid Level

The hydraulic-fluid reservoir is filled at the factory with high quality hydraulic fluid. Before operating the machine each day, check the level of the hydraulic fluid. Your machine has a dipstick or a white plastic window on the front of the hydraulic-fluid reservoir (behind the seat on the left side of the machine) that is used to check the hydraulic-fluid level. The fluid should be between the window lines or the dipstick marks; if not, add more appropriate fluid.

Refer to Figure 48 for this procedure.

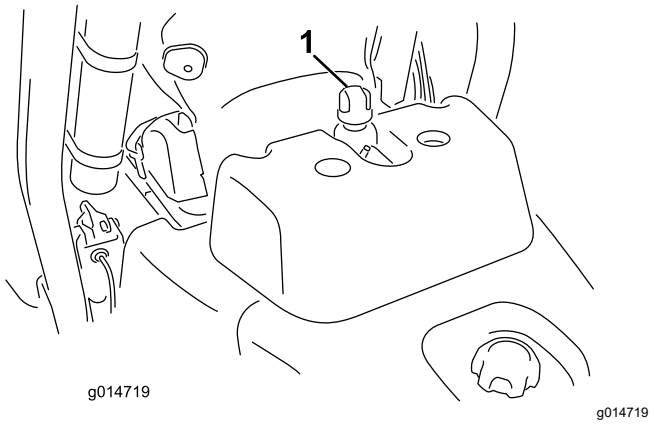

Figure 48

1. Hydraulic-tank cap or dipstick location

1. Position the machine on a level surface.

   Note: Ensure that the machine has cooled down so that the fluid is cold.

2. Check the fluid level according to the tank on your machine:
   - If your tank has a sight window, check the oil level there and proceed to step 5.
   - If your tank does not have a sight window, locate the dipstick on the top of the hydraulic tank and proceed to step 3.
3. Remove the dipstick and wipe it with a clean rag, then screw the dipstick back into the tank.
4. Remove the dipstick and check the fluid level. If the fluid is between the marks on the dipstick, the level is sufficient. If the level is not between the marks, more fluid is needed.
5. Remove the cap or dipstick (depending on your machine) from the hydraulic fluid tank and slowly fill the tank with the appropriate high-quality hydraulic fluid until the level is between the 2 lines on the sight window or 2 marks on the dipstick.
6. Install the cap or dipstick and wipe up any fluid that may have spilled.

   Important: **Check the level of the hydraulic fluid before the engine is first started and daily thereafter.**

Changing the Hydraulic Fluid and Filter

Service Interval: Every 800 hours—If you **are not** using the recommended hydraulic fluid or have ever filled the reservoir with an alternative fluid, change the hydraulic fluid, filter, and tank breather.

Every 1,000 hours—If you **are** using the recommended hydraulic fluid, change the hydraulic-fluid filter.

Every 2,000 hours—If you **are** using the recommended hydraulic fluid, change the hydraulic fluid.

Hydraulic Fluid Capacity: 25.7 L (6.8 US gallons)

If the fluid becomes contaminated, have your authorized Toro distributor flush the system. Contaminated fluid looks milky or black when compared to clean fluid.

1. Clean the area around the filter mounting area (Figure 49). Place a drain pan under the filter and remove the filter.

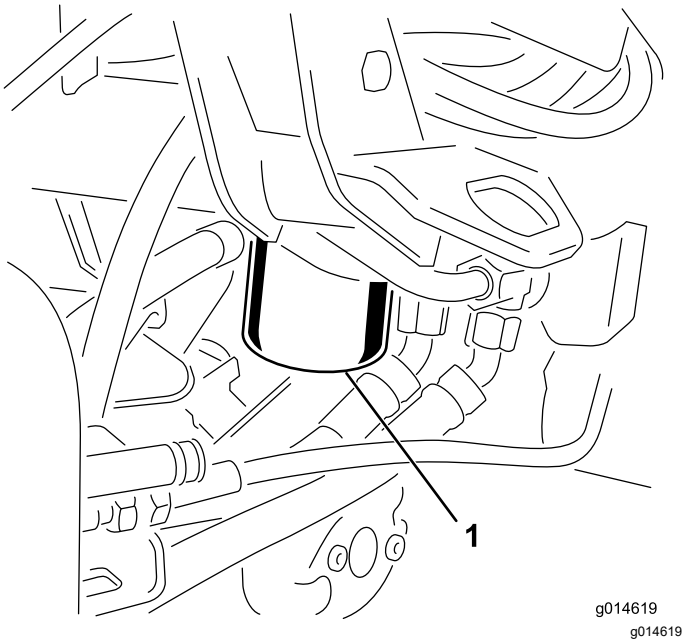

Figure 49

1. Hydraulic-fluid filter

Note: If you will not be draining the fluid, disconnect and plug the hydraulic line going to the filter.

2. Fill the replacement filter with the appropriate hydraulic fluid, lubricate the sealing gasket, and hand turn it until the gasket contacts the filter head. Then tighten it 3/4 turn further.
3. Fill the hydraulic reservoir with hydraulic fluid; refer to Hydraulic Fluid Specifications (page 46) and Checking the Hydraulic-Fluid Level (page 47).
4. Start the machine and run it at idle for 3 to 5 minutes to circulate the fluid and remove any air trapped in the system. Shut off the engine and check the fluid level.
5. Dispose of the fluid and filter properly.

Checking the Hydraulic Lines and Hoses

Check the hydraulic lines and hoses daily for leaks, kinked lines, loose mounting supports, wear, loose fittings, weather deterioration, and chemical deterioration. Make all necessary repairs before operating.

Cutting Unit Maintenance

Blade Safety

A worn or damaged blade or bedknife can break, and a piece could be thrown toward you or bystanders, resulting in serious personal injury or death.

- Inspect the blades and bedknives periodically for excessive wear or damage.
- Use care when checking the blades. Wear gloves and use caution when servicing them. Only replace or backlap the blades and bedknives; never straighten or weld them.
- On machines with multiple cutting units, take care when rotating a cutting unit; it can cause the reels in the other cutting units to rotate.

Installing and Removing the Cutting Units

Note: When sharpening, setting the height-of-cut, or performing other maintenance procedures on the cutting units, store the cutting unit reel motors in the storage location on the front of the suspension arms to prevent damage to them.

Important: **Do not raise the suspension to the transport position when the reel motors are in the holders in the machine frame. Damage to the motors or hoses could result.**

Important: **Whenever you need to tip the cutting unit, prop up rear of cutting unit to ensure that the nuts on the bedbar adjusting screws are not resting on work surface (Figure 50).**

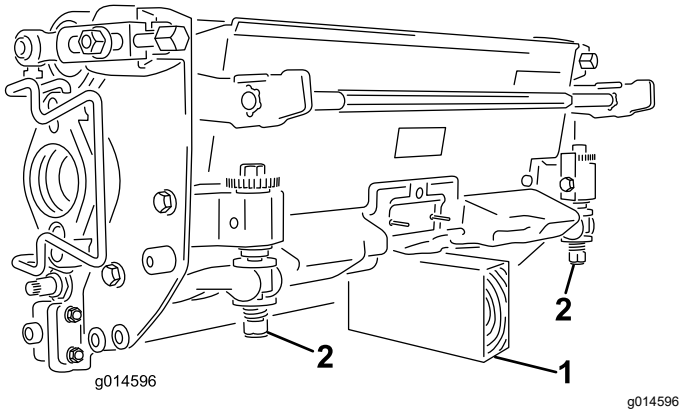

Figure 50

1. Prop (not provided)
2. Bedbar-adjusting-screw nut

Installing the Electrical Counterweights

Secure the electrical counterweight to the existing counterweight with 2 capscrews as shown in Figure 51.

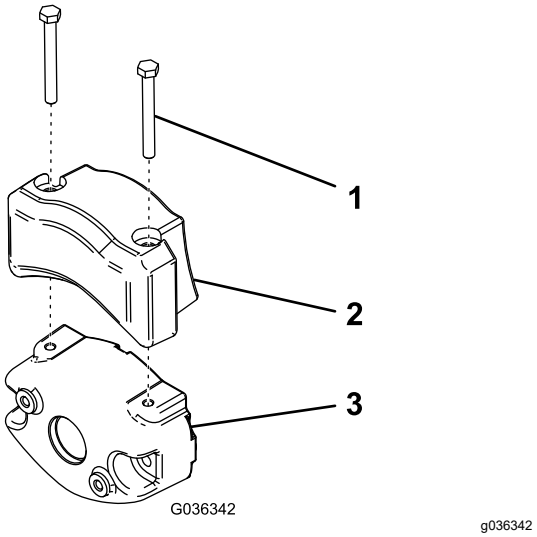

Figure 51

1. Capscrew
2. Electrical counterweight
3. Existing counterweight

Installing the Cutting Units

1. Disconnect the cutting unit power disconnect couplers; refer to Cutting Unit Power Disconnect Connectors (page 22).

   ⚠ CAUTION

   If you do not disconnect the power to the cutting units, someone could accidentally start the cutting unit, causing serious injury to hands and feet.

   Always separate the cutting unit power disconnect couplers before working on the cutting units.

2. Lift up on the foot rest and swing it open, allowing access to the center cutting unit position (Figure 52).

   ⚠ CAUTION

   The foot rest can pinch fingers if it falls into the closed position.

   Keep your fingers clear of the area where the foot rest seats while it is open.

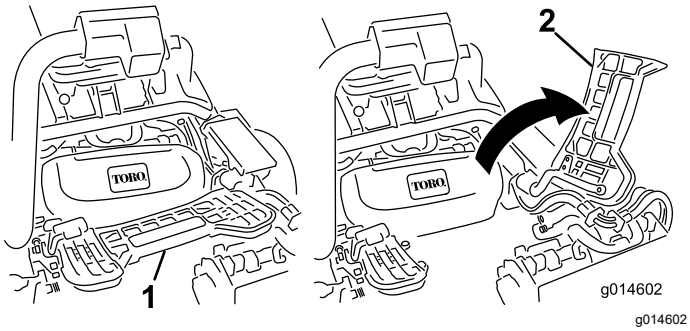

Figure 52

1. Footrest—closed
2. Footrest—open

3. Position the cutting unit under the center suspension arm.
4. With the latches on the suspension-arm bar pointing up (i.e., open) (Figure 53), push the suspension arm down so that the bar fits over the bar across the top of the cutting unit (Figure 54).

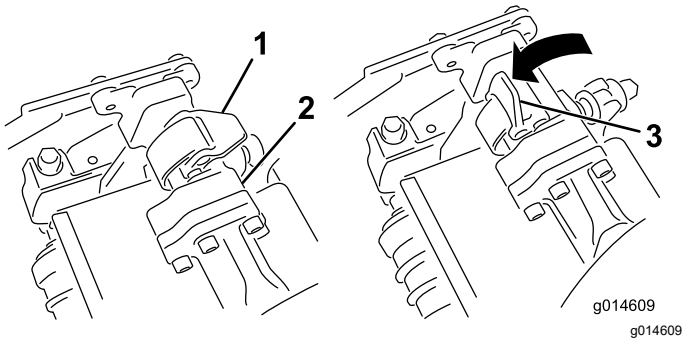

Figure 53

1. Latch—closed position
2. Suspension-arm bar
3. Latch—open position

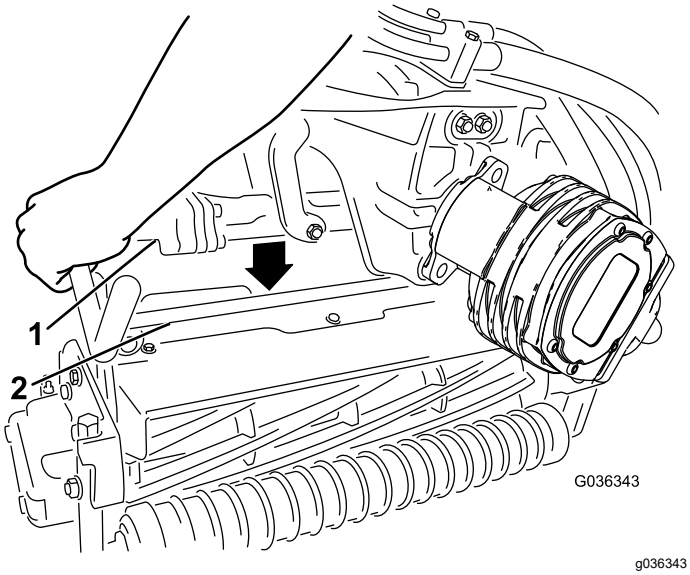

Figure 54

1. Suspension-arm bar
2. Cutting-unit bar

5. Close the latches down and around the cutting-unit bar and lock them in place (Figure 53).

   Note: You can hear a click and feel when the latches are properly locked in place.

6. Coat the spline shaft of the cutting unit motor with clean grease (Figure 55).
7. Insert the motor into the left side of the cutting unit (as viewed from the operator's position) and pull the motor retaining bar on the cutting unit toward the motor until you hear a click from both sides of the motor (Figure 55).

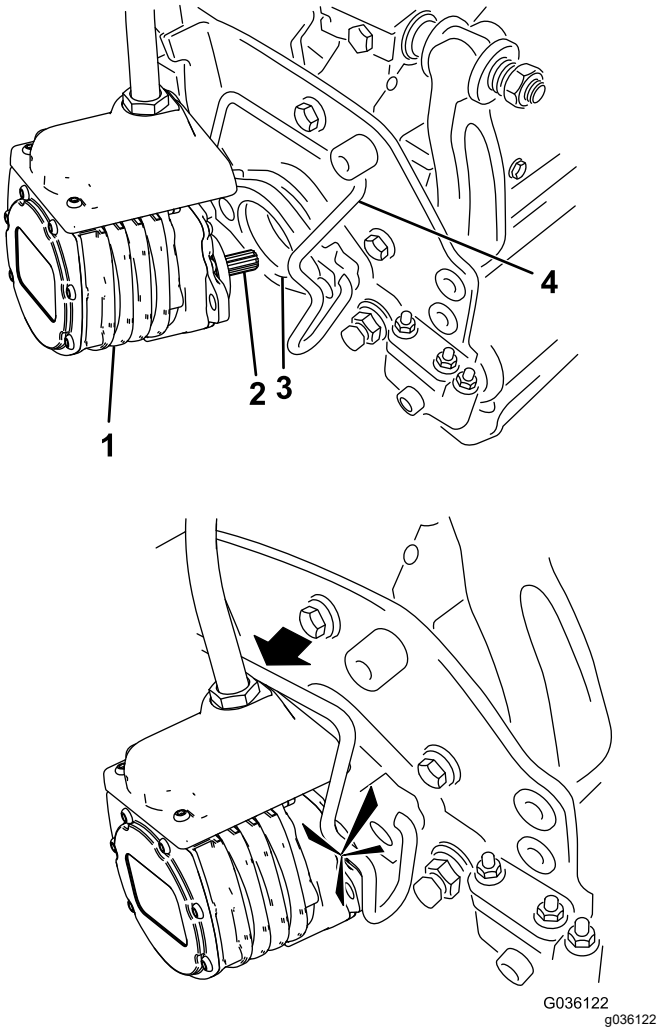

Figure 55

1. Reel motor
2. Spline shaft
3. Cavity
4. Motor-retaining bar

8. Mount a grass basket onto the basket hooks on the suspension arm.
9. Repeat this procedure for the other cutting units.
10. Connect the cutting unit power disconnect couplers; refer to Cutting Unit Power Disconnect Connectors (page 22).

Removing the Cutting Units

1. Disconnect the cutting unit power disconnect couplers; refer to Cutting Unit Power Disconnect Connectors (page 22).

⚠ CAUTION

If you do not disconnect the power to the cutting units, someone could accidentally start the cutting unit, causing serious injury to hands and feet.

Always separate the cutting unit power disconnect couplers before working on the cutting units.

2. Park the machine on a clean level surface, lower the cutting units to the ground until the suspension hydraulics are fully extended, shut off the engine, and engage the parking brake.
3. Push the motor retaining bar out of the slots on the motor toward the cutting unit and remove the motor from the cutting unit.

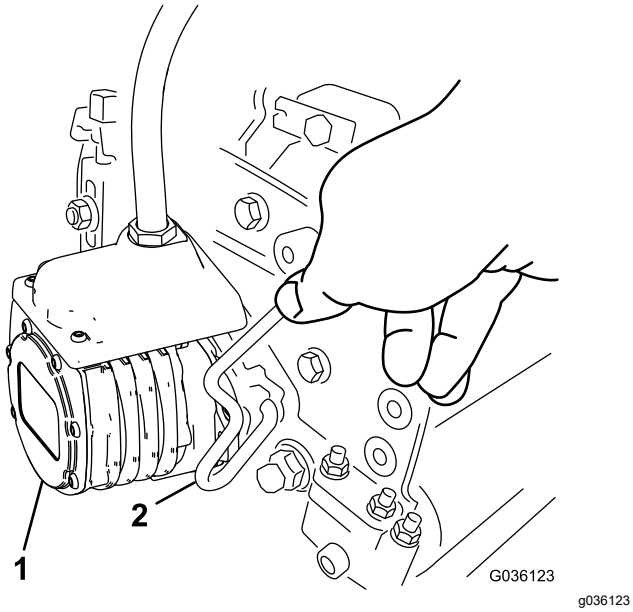

Figure 56

1. Reel motor
2. Motor-retaining bar

4. Move the motor to the storage location on the front of the suspension arm (Figure 57).

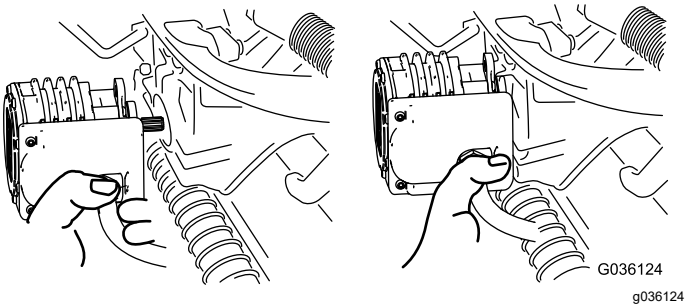

Figure 57

Note: When sharpening, setting the height-of-cut, or performing other maintenance procedures on the cutting units, store the cutting unit reel motors in the storage location on the front of the suspension arms to prevent damage to them.

Important: **Do not raise the suspension to the transport position when the reel motors are in the holders in the machine frame. Damage to the motors or hoses could result. If you must move the traction unit without the cutting units installed, secure them to the suspension arms using cable ties.**

5. Open the latches on the suspension-arm bar of the cutting unit you are removing (Figure 53).
6. Disconnect the latches from the cutting-unit bar.
7. Roll the cutting unit out from under the suspension arm.
8. Repeat steps 3 through 7 for the other cutting units as required.
9. Connect the cutting unit power disconnect couplers; refer to Cutting Unit Power Disconnect Connectors (page 22).

Checking the Reel-to-Bedknife Contact

Each day before operating the machine, check the reel-to-bedknife contact, regardless if the quality of cut had previously been acceptable. There must be light contact across the full length of the reel and bedknife; refer to the Cutting Unit *Operator's Manual*.

Before checking the reels, disconnect the cutting unit power disconnect couplers; refer to Cutting Unit Power Disconnect Connectors (page 22). Connect them when finished.

Backlapping the Reels

⚠ WARNING

Contact with the reels or other moving parts can result in personal injury.

- **Keep your fingers, hands, and clothing away from the reels or other moving parts.**
- **Never attempt to turn the reels by hand or foot while the engine is running.**

1. Park the machine on a level surface, lower the cutting units, shut off the engine, remove the key, and engage the parking brake.
2. Remove the plastic cover to the left side of the seat.
3. Make initial reel-to-bedknife adjustments appropriate for backlapping on all cutting units that you want to backlap; refer to the cutting unit *Operator's Manual.*
4. Start the engine and run at low idle speed. If the engine stalls, increase the engine speed.
5. On the InfoCenter control, from the SERVICE menu, select BACKLAP.
6. Set BACKLAP to ON.
7. Pull up the Main Menu and scroll down to Settings.
8. In the SETTINGS menu scroll down to BACKLAP RPM and use the ± button to select the desired backlap speed.
9. With the functional control lever in the NEUTRAL position, move the Raise/Lower Mow control forward to start the backlapping operation on the designated reels.
10. Apply lapping compound with a long-handled brush. Never use a short-handled brush.
11. If the reels stall or become erratic while backlapping, select a higher reel speed setting until the speed stabilizes.
12. To make an adjustment to the cutting units while backlapping, turn the reels off by moving the Raise/Lower Mow control rearward and shut off the engine. After completing adjustments, repeat steps 4 through 10.
13. Repeat the procedure for all cutting units that you want to backlap.
14. When finished, return the InfoCenter BACKLAP setting to OFF or turn the ignition key to the OFF position to return the machine to forward cutting operation.
15. Wash all lapping compound off of the cutting units. Adjust the cutting unit reel to bedknife as needed. Move the cutting-unit reel speed control to the desired mowing position.

Storage

Storage Safety

- Shut off the machine, remove the key, and wait for all movement to stop before you leave the operator's position. Allow the machine to cool before adjusting, servicing, cleaning, or storing it.
- Do not store the machine or fuel container where there is an open flame, spark, or pilot light, such as on a water heater or other appliance.

Preparing the Machine for Storage

If you wish to store the machine for a long period of time, the following steps should be performed prior to storage:

1. Refer to Storage Safety (page 53).
2. Remove accumulations of dirt and old grass clippings. Sharpen the blades and bedknives, if necessary; refer to the cutting unit *Operator's Manual*. Use a rust preventive on bedknives and blades. Grease and oil all lubrication points.
3. Block up the wheels to remove any weight on the tires.
4. Drain and replace the hydraulic fluid and filter and inspect the hydraulic lines and fittings. Replace, if necessary; refer to Changing the Hydraulic Fluid and Filter (page 48) and Checking the Hydraulic Lines and Hoses (page 48).
5. All fuel should be removed from the fuel tank. Run the engine until it stops from lack of fuel. Replace the fuel filter; refer to Replacing the Fuel Filter/Water Separator (page 39).
6. While the engine is still warm, drain the oil from the crankcase. Refill it with fresh oil; refer to Changing the Engine Oil and Filter (page 38).
7. Clean dirt and chaff from the cylinder, cylinder head fins, and blower housing.
8. Remove the battery and charge it fully. Either store it on the shelf or on the machine. Leave the cables disconnected if it is stored on the machine. Store the battery in a cool atmosphere to avoid quick deterioration of the charge in the battery.
9. If possible, store the machine in a warm, dry location.

EEA/UK Privacy Notice

Toro's Use of Your Personal Information

The Toro Company ("Toro") respects your privacy. When you purchase our products, we may collect certain personal information about you, either directly from you or through your local Toro company or dealer. Toro uses this information to fulfil contractual obligations - such as to register your warranty, process your warranty claim or to contact you in the event of a product recall - and for legitimate business purposes - such as to gauge customer satisfaction, improve our products or provide you with product information which may be of interest. Toro may share your information with our subsidiaries, affiliates, dealers or other business partners in connection these activities. We may also disclose personal information when required by law or in connection with the sale, purchase or merger of a business. We will never sell your personal information to any other company for marketing purposes.

Retention of your Personal Information

Toro will keep your personal information as long as it is relevant for the above purposes and in accordance with legal requirements. For more information about applicable retention periods please contact legal@toro.com.

Toro's Commitment to Security

Your personal information may be processed in the US or another country which may have less strict data protection laws than your country of residence. Whenever we transfer your information outside of your country of residence, we will take legally required steps to ensure that appropriate safeguards are in place to protect your information and to make sure it is treated securely.

Access and Correction

You may have the right to correct or review your personal data, or object to or restrict the processing of your data. To do so, please contact us by email at legal@toro.com. If you have concerns about the way in which Toro has handled your information, we encourage you to raise this directly with us. Please note that European residents have the right to complain to your Data Protection Authority.

California Proposition 65 Warning Information

What is this warning?

You may see a product for sale that has a warning label like the following:

WARNING: Cancer and Reproductive Harm—www.p65Warnings.ca.gov.

What is Prop 65?

Prop 65 applies to any company operating in California, selling products in California, or manufacturing products that may be sold in or brought into California. It mandates that the Governor of California maintain and publish a list of chemicals known to cause cancer, birth defects, and/or other reproductive harm. The list, which is updated annually, includes hundreds of chemicals found in many everyday items. The purpose of Prop 65 is to inform the public about exposure to these chemicals.

Prop 65 does not ban the sale of products containing these chemicals but instead requires warnings on any product, product packaging, or literature with the product. Moreover, a Prop 65 warning does not mean that a product is in violation of any product safety standards or requirements. In fact, the California government has clarified that a Prop 65 warning "is not the same as a regulatory decision that a product is 'safe' or 'unsafe.'" Many of these chemicals have been used in everyday products for years without documented harm. For more information, go to https://oag.ca.gov/prop65/faqs-view-all.

A Prop 65 warning means that a company has either (1) evaluated the exposure and has concluded that it exceeds the "no significant risk level"; or (2) has chosen to provide a warning based on its understanding about the presence of a listed chemical without attempting to evaluate the exposure.

Does this law apply everywhere?

Prop 65 warnings are required under California law only. These warnings are seen throughout California in a wide range of settings, including but not limited to restaurants, grocery stores, hotels, schools, and hospitals, and on a wide variety of products. Additionally, some online and mail order retailers provide Prop 65 warnings on their websites or in catalogs.

How do the California warnings compare to federal limits?

Prop 65 standards are often more stringent than federal and international standards. There are various substances that require a Prop 65 warning at levels that are far lower than federal action limits. For example, the Prop 65 standard for warnings for lead is 0.5 µg/day, which is well below the federal and international standards.

Why don't all similar products carry the warning?

- Products sold in California require Prop 65 labelling while similar products sold elsewhere do not.
- A company involved in a Prop 65 lawsuit reaching a settlement may be required to use Prop 65 warnings for its products, but other companies making similar products may have no such requirement.
- The enforcement of Prop 65 is inconsistent.
- Companies may elect not to provide warnings because they conclude that they are not required to do so under Prop 65; a lack of warnings for a product does not mean that the product is free of listed chemicals at similar levels.

Why does Toro include this warning?

Toro has chosen to provide consumers with as much information as possible so that they can make informed decisions about the products they buy and use. Toro provides warnings in certain cases based on its knowledge of the presence of one or more listed chemicals without evaluating the level of exposure, as not all the listed chemicals provide exposure limit requirements. While the exposure from Toro products may be negligible or well within the "no significant risk" range, out of an abundance of caution, Toro has elected to provide the Prop 65 warnings. Moreover, if Toro does not provide these warnings, it could be sued by the State of California or by private parties seeking to enforce Prop 65 and subject to substantial penalties.

The Toro Warranty

Two-Year or 1,500 Hours Limited Warranty

Conditions and Products Covered

The Toro Company and its affiliate, Toro Warranty Company, pursuant to an agreement between them, jointly warrant your Toro Commercial product ("Product") to be free from defects in materials or workmanship for 2 years or 1,500 operational hours*, whichever occurs first. This warranty is applicable to all products with the exception of Aerators (refer to separate warranty statements for these products). Where a warrantable condition exists, we will repair the Product at no cost to you including diagnostics, labor, parts, and transportation. This warranty begins on the date the Product is delivered to the original retail purchaser.
* Product equipped with an hour meter.

Instructions for Obtaining Warranty Service

You are responsible for notifying the Commercial Products Distributor or Authorized Commercial Products Dealer from whom you purchased the Product as soon as you believe a warrantable condition exists. If you need help locating a Commercial Products Distributor or Authorized Dealer, or if you have questions regarding your warranty rights or responsibilities, you may contact us at:

Toro Commercial Products Service Department
Toro Warranty Company
8111 Lyndale Avenue South
Bloomington, MN 55420-1196

952–888–8801 or 800–952–2740
E-mail: commercial.warranty@toro.com

Owner Responsibilities

As the product owner, you are responsible for required maintenance and adjustments stated in your *Operator's Manual*. Repairs for product issues caused by failure to perform required maintenance and adjustments are not covered under this warranty.

Items and Conditions Not Covered

Not all product failures or malfunctions that occur during the warranty period are defects in materials or workmanship. This warranty does not cover the following:

- Product failures which result from the use of non-Toro replacement parts, or from installation and use of add-on, or modified non-Toro branded accessories and products.
- Product failures which result from failure to perform recommended maintenance and/or adjustments.
- Product failures which result from operating the Product in an abusive, negligent, or reckless manner.
- Parts consumed through use that are not defective. Examples of parts which are consumed, or used up, during normal Product operation include, but are not limited to, brake pads and linings, clutch linings, blades, reels, rollers and bearings (sealed or greasable), bed knives, spark plugs, castor wheels and bearings, tires, filters, belts, and certain sprayer components such as diaphragms, nozzles, and check valves.
- Failures caused by outside influence, including, but not limited to, weather, storage practices, contamination, use of unapproved fuels, coolants, lubricants, additives, fertilizers, water, or chemicals.
- Failure or performance issues due to the use of fuels (e.g. gasoline, diesel, or biodiesel) that do not conform to their respective industry standards.
- Normal noise, vibration, wear and tear, and deterioration. Normal "wear and tear" includes, but is not limited to, damage to seats due to wear or abrasion, worn painted surfaces, scratched decals or windows.

Parts

Parts scheduled for replacement as required maintenance are warranted for the period of time up to the scheduled replacement time for that part. Parts replaced under this warranty are covered for the duration of the original product warranty and become the property of Toro. Toro will make the final decision whether to repair any existing part or assembly or replace it. Toro may use remanufactured parts for warranty repairs.

Deep Cycle and Lithium-Ion Battery Warranty

Deep cycle and Lithium-Ion batteries have a specified total number of kilowatt-hours they can deliver during their lifetime. Operating, recharging, and maintenance techniques can extend or reduce total battery life. As the batteries in this product are consumed, the amount of useful work between charging intervals will slowly decrease until the battery is completely worn out. Replacement of worn out batteries, due to normal consumption, is the responsibility of the product owner. Note: (Lithium-Ion battery only): Pro-rated after 2 years. Refer to the battery warranty for additional information.

Lifetime Crankshaft Warranty (ProStripe 02657 Model Only)

The Prostripe which is fitted with a genuine Toro Friction Disc and Crank-Safe Blade Brake Clutch (integrated Blade Brake Clutch (BBC) + Friction Disc assembly) as original equipment and used by the original purchaser in accordance with recommended operating and maintenance procedures, are covered by a Lifetime Warranty against engine crankshaft bending. Machines fitted with friction washers, Blade Brake Clutch (BBC) units and other such devices are not covered by the Lifetime Crankshaft Warranty.

Maintenance is at Owner's Expense

Engine tune-up, lubrication, cleaning and polishing, replacement of filters, coolant, and completing recommended maintenance are some of the normal services Toro products require that are at the owner's expense.

General Conditions

Repair by an Authorized Toro Distributor or Dealer is your sole remedy under this warranty.

Neither The Toro Company nor Toro Warranty Company is liable for indirect, incidental or consequential damages in connection with the use of the Toro Products covered by this warranty, including any cost or expense of providing substitute equipment or service during reasonable periods of malfunction or non-use pending completion of repairs under this warranty. Except for the Emissions warranty referenced below, if applicable, there is no other express warranty. All implied warranties of merchantability and fitness for use are limited to the duration of this express warranty.

Some states do not allow exclusions of incidental or consequential damages, or limitations on how long an implied warranty lasts, so the above exclusions and limitations may not apply to you. This warranty gives you specific legal rights, and you may also have other rights which vary from state to state.

Note Regarding Emissions Warranty

The Emissions Control System on your Product may be covered by a separate warranty meeting requirements established by the U.S. Environmental Protection Agency (EPA) and/or the California Air Resources Board (CARB). The hour limitations set forth above do not apply to the Emissions Control System Warranty. Refer to the Engine Emission Control Warranty Statement supplied with your product or contained in the engine manufacturer's documentation.

Countries Other than the United States or Canada

Customers who have purchased Toro products exported from the United States or Canada should contact their Toro Distributor (Dealer) to obtain guarantee policies for your country, province, or state. If for any reason you are dissatisfied with your Distributor's service or have difficulty obtaining guarantee information, contact your Authorized Toro Service Center.