Form No. 3417-189 Rev C

TORO®

Count on it.

Parts Catalog

Greensmaster® 3150

2-Wheel Drive Traction Unit

Model No. 04358—Serial No. 401319526 and Up

Register at www.Toro.com.
Original Instructions (EN)

CE

3417-189 C

Ordering Replacement Parts

To order replacement parts, please supply the part number, the quantity, and the description of each part desired.

Understanding Reference Numbers

Each identified part in an illustration has a reference number. The reference number for a part also appears in the parts list, along with other information about the part.

This catalog uses two special reference number formats, one to indicate parts in a service assembly and another to indicate the quantity of a given part in an illustration.

Service Assembly Reference Numbers

Parts in service assemblies have reference numbers in the form a:b. The a represents the reference number of the entire service assembly and the b represents a sequential number unique to each part within the service assembly.

For example, a wheel assembly might be identified by reference number 6, the tire by 6:1, the valve by 6:2, and the wheel by 6:3. When you order the assembly identified by reference number 6, you receive all parts identified by reference numbers 6:1,6:2, and 6:3. However, you may also order any part individually. Reference numbers of this type appear in illustration and in parts lists.

Reference Numbers Indicating Quantity

In an illustration, if a reference number indicates more than one part, the reference number has the form nX y. The n represents the quantity of the part, the X is the multiplication symbol, and the y represents the reference number.

For example, in an illustration, the reference number 2X 37 means that two of the parts identified by reference number 37 are indicated.

Contents

ROPS and Frame Assembly . . . 4
Steering Arm Assembly . . . 5
Traction Pedal Assembly . . . 6
Joystick Assembly . . . 7
Joystick Bracket Assembly No. 120-5280 . . . 8
Speed Selector Lever and Console Assembly . . . 9
Control Panel Assembly . . . 11
Engine Installation Assembly . . . 12
Fuel Tank Assembly . . . 14
Wire Harness Assembly . . . 15
Battery Assembly . . . 16
Ignition and Seat Switch Assembly . . . 17
Engine Wire Harness Assembly . . . 18
Ground Drive Assembly . . . 19
Hydraulic Motor Assembly (CCW) No. 110-4015 . . . 20
Hydraulic Motor Assembly (CW) No. 110-4016 . . . 21
Hydrostat and Gear Pump Drive Assembly . . . 22
Hydraulic Gear Pump Assembly No. 114-9956 . . . 23
Hydraulic Pump Assembly No. 121-9557 . . . 24
Neutral System Assembly . . . 26
Front Hydraulic Reel Drive and Hose Assembly . . . 27
Hydraulic Reel Motor Assembly No. 120-2072 . . . 28
Hydraulic Steering Hose and Center Lift Cylinder Hose Assembly . . . 29
Rear Hydraulic Reel Drive and Hose Assembly . . . 30
Front Lift Cylinders Hose and Filter Assembly . . . 31
Steering Wheel and Valve Assembly . . . 32
Steering Valve Assembly No. 114-4672 . . . 33
Right Hand and Left Hand Lift Cylinder Assembly . . . 34
Hydraulic Cylinder Assembly No. 131-2787 . . . 35
Steering Cylinder and Center Lift Cylinder Assembly . . . 36
Hydraulic Cylinder Assembly No. 131-2786 . . . 37
Hydraulic Manifold Assembly . . . 38
Hydraulic Manifold Assembly No. 112-0289 . . . 39
Hydraulic Reservoir and Leak Detector Assembly . . . 41
Center Pull Frame Assembly . . . 43
Left Pull Frame Assembly . . . 45
Right Pull Frame Assembly . . . 47
Front Wheel and Brake Assembly . . . 49
Brake Assembly No. 104-7705 . . . 50
Rear Wheel Assembly . . . 51
Seat Assembly . . . 52
Attachments and Accessories . . . 53

© 2021—The Toro® Company
8111 Lyndale Avenue South
Bloomington, MN 55420

Contact us at www.Toro.com.
Printed in the USA.
All Rights Reserved

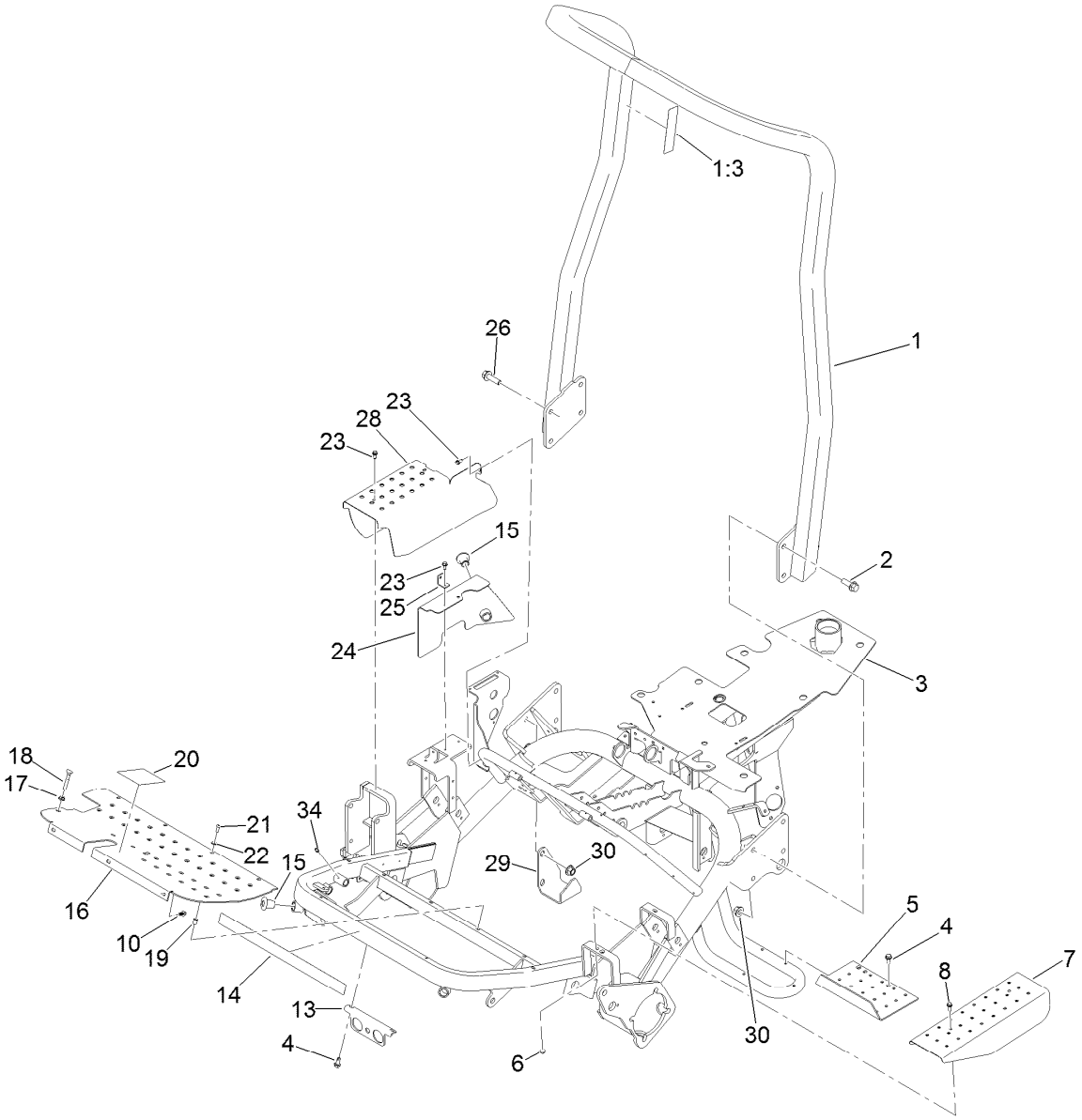

ROPS and Frame Assembly

Ref.	Part Number	Qty.	Description
1	133-2308	1	ROPS ASM
1:3	115-8226	1	Decal-ROPS
2	130-6482	6	Screw-HHF
3	127-6143-01	1	Frame
4	32104-32	5	Screw-HWH
5	130-0103-01	1	Step
6	32128-33	2	Nut-HF
7	83-0200-01	1	Plate-Cover, LH
8	115-5103	2	Screw-HHF
10	99-6810	3	Screw-HHF
13	107-2552-01	1	Bracket-Bulkhead
14	115-5216	1	Decal
15	83-1700	3	Bushing-Flange
16	127-2225-01	1	Plate-Footrest

Ref.	Part Number	Qty.	Description
17	32128-20	1	Nut-HF
18	17-9426	1	Screw-Handle
19	32148-6	7	Nut-Clinch
20	93-8062	1	Decal-Brake, Parking
21	3274-31	4	Screw-HSBH
22	3256-1	4	Washer-Flat
23	32144-10	5	Screw-HWH
24	105-8282-01	1	Shield-Side
25	120-3172	1	Bracket
26	130-6481	2	Screw-HHF
28	130-6548-01	1	Channel-Step, Right
29	105-8263-01	1	Bracket-ROPS
30	99-5107	8	Nut-Lock
34	302-5	1	Fitting-Grease

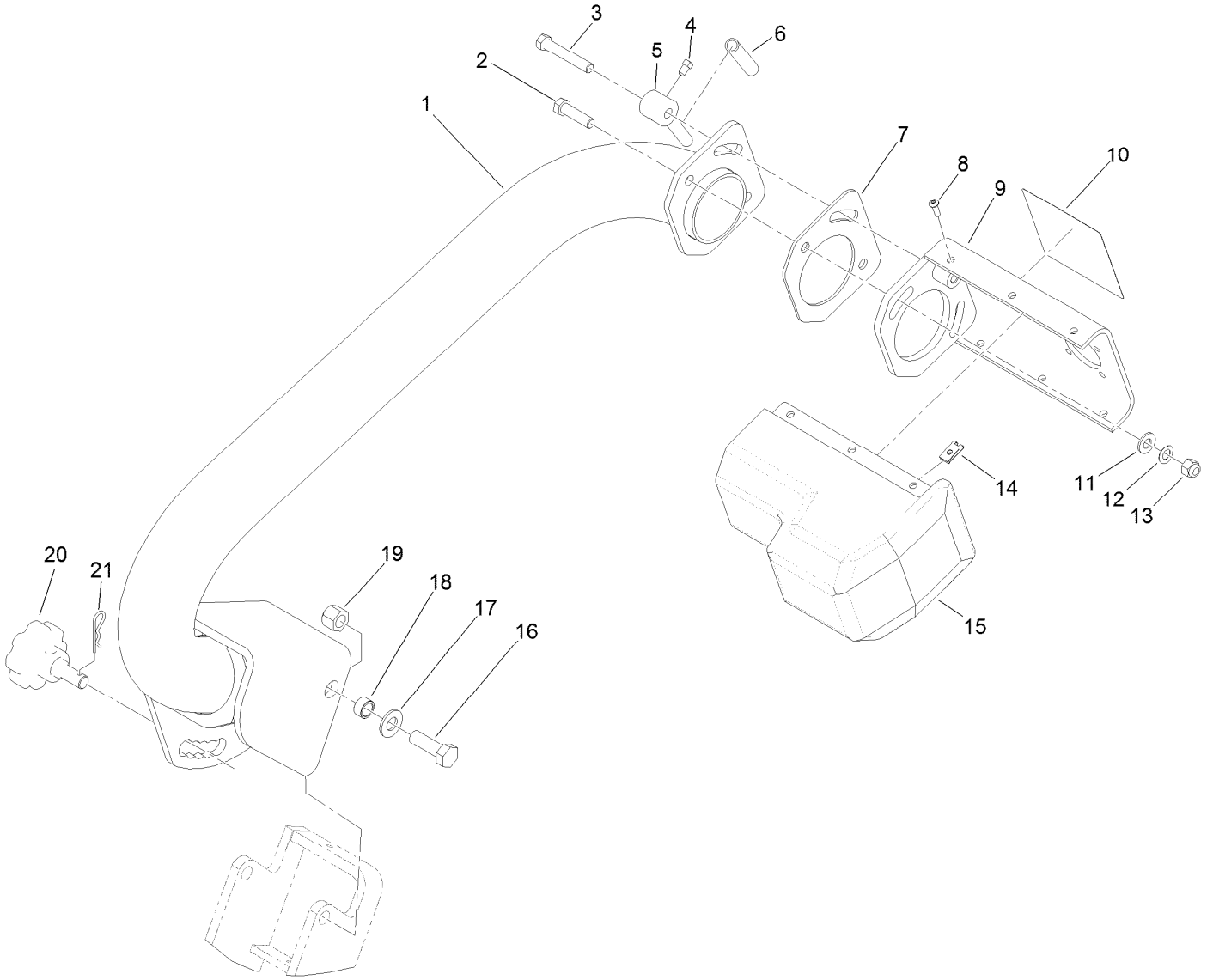

Steering Arm Assembly

Ref.	Part Number	Qty.	Description
1	105-0418-01	1	Arm-Steering
2	323-29	2	Screw-HH
3	105-4326	1	Screw-HH, LH
4	3241-1	1	Screw-Set, SQH
5	119-3587	1	Lever-Steering
6	92-6798	1	Cap-Rod, Tilt
7	105-0457	1	Plate-Friction
8	3274-39	6	Screw-HSBH
9	114-4693-03	1	Mount-Steering
10	133-2338	1	Decal-Danger
10	133-2339	1	Decal-Danger, CE

Ref.	Part Number	Qty.	Description
11	3256-24	2	Washer-Flat
12	3290-477	2	Washer-Curved
13	3296-39	2	Nut-Lock, NI
14	3290-277	6	Nut-Speed
15	83-0810	1	Cover-Steering
16	325-6	2	Screw-HH
17	3256-26	2	Washer-Flat
18	47-2890	2	Bushing
19	3296-23	2	Nut-Lock, NI
20	117-9513	1	Knob-Steering
21	3290-467	1	Pin-Hair

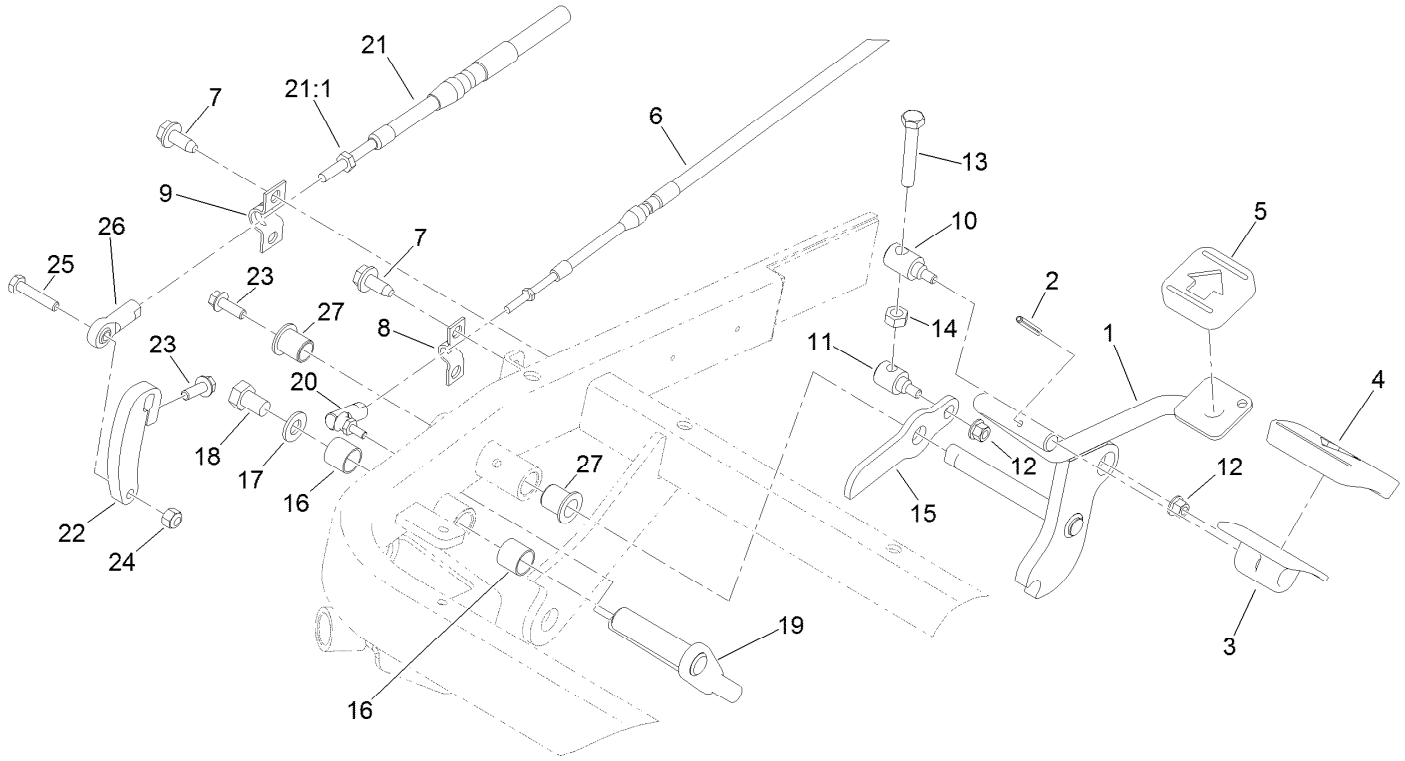

Traction Pedal Assembly

Ref.	Part Number	Qty.	Description
1	127-2222-01	1	Pedal-Traction
2	32121-45	1	Pin-Spring
3	117-9507	1	Pedal-Accelerator
4	74-9100	1	Pad-Pedal, Forward
5	74-9110	1	Pad-Pedal, Reverse
6	127-2244	1	Cable-Neutral Lock
7	32144-70	4	Screw-HWHTF
8	93-2279	1	Clamp-Cable
9	93-2092	1	Clamp-Cable
10	94-1375	1	Trunnion-Bracket, Lock
11	94-1374	1	Trunnion-Bracket, Mow
12	81-0130	2	Nut-Flange, NI
13	94-3489	1	Screw-HH
14	33014-00	1	Nut-Hex

Ref.	Part Number	Qty.	Description
15	127-2241	1	Plate-Stop
16	256-311	2	Bushing-Split
17	3256-24	1	Washer-Flat
18	33115-016	1	Screw-HH
19	132-3803	1	Lock-Neutral
20	2411-38	1	Joint-Ball
21	105-5445	1	Cable-Traction
21:1	3220-1	2	Nut-Jam
22	130-6539	1	Lever-Traction
23	117-8304	2	Screw-HHF
24	3296-42	1	Nut-Lock, NI
25	321-8	1	Screw-HH
26	2411-41	1	Rod End-Ball Joint
27	125-8775	2	Bushing-Flange

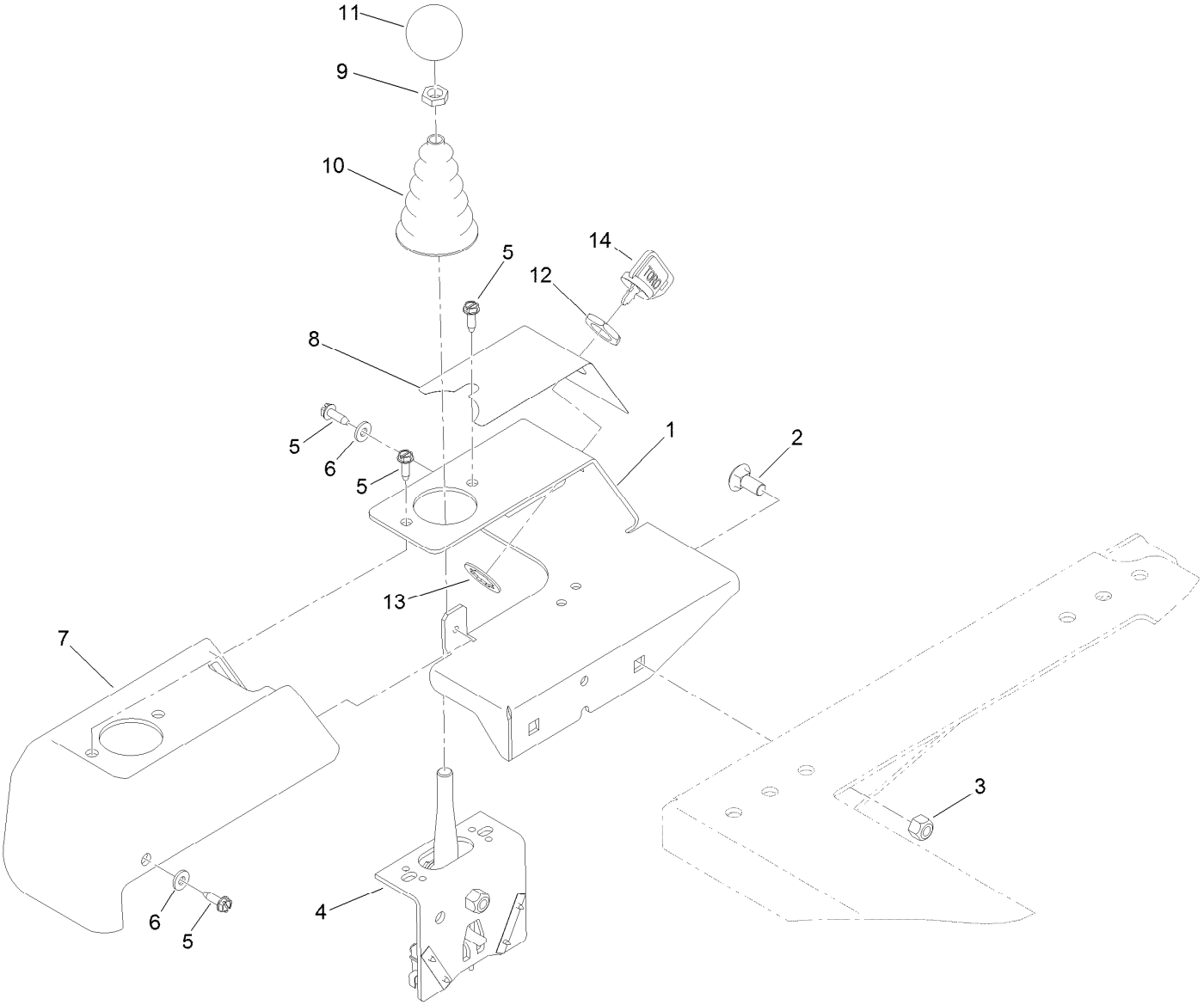

Joystick Assembly

Ref.	Part Number	Qty.	Description
1	105-8252-03	1	Bracket-Pod
2	3230-1	2	Bolt-CARR
3	3296-29	2	Nut-Lock, NI
4	120-5280	1	Bracket-Joystick
5	32144-19	4	Screw-SHWH
6	3256-14	2	Washer-Flat
7	105-8251	1	Pod
8	105-8305	1	Decal-Panel, Control
9	3218-3	1	Nut-Jam
10	93-5961	1	Boot-Lever
11	233-42	1	Knob
12	107-1571	1	Nut-Hex
13	107-1572	1	Washer-Lock
14	63-8360	2	Key-Ignition

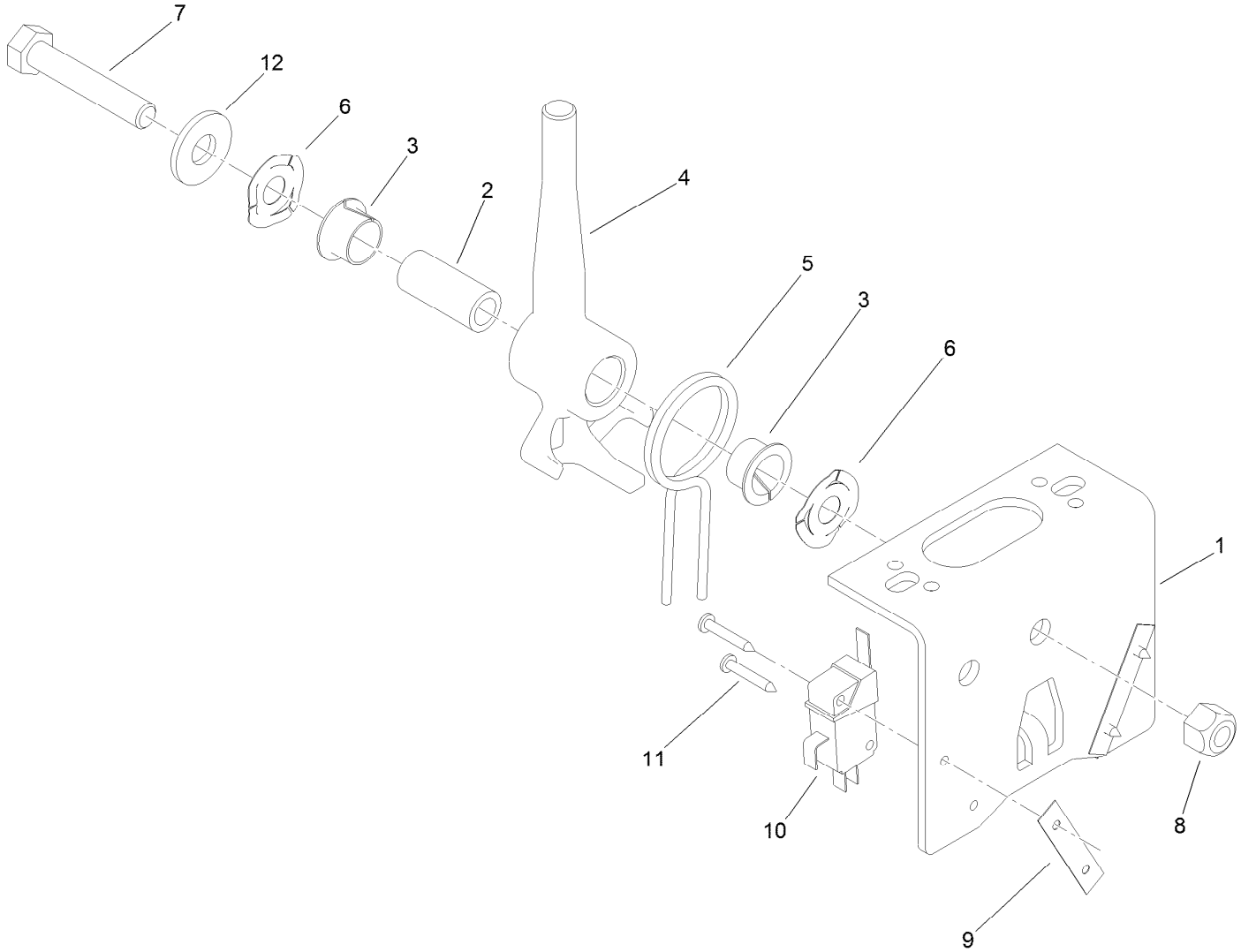

Joystick Bracket Assembly No. 120-5280

Ref.	*Part Number*	*Qty.*	*Description*
1	115-5357-03	1	Bracket-Joystick
2	106-4192	1	Spacer
3	93-5547	2	Bushing-Nylon
4	119-3540	1	Hub-Pivot, Joystick
5	105-8289	1	Spring-Torsion
6	106-4193	2	Washer-Finger, Spring
7	322-9	1	Screw-HH
8	3296-29	1	Nut-Lock, NI
9	3290-354	2	Nut-Speed
10	108-6496	2	Switch (W/Boot)
11	95-3003	4	Screw-PPHTF
12	3256-3	1	Washer-Flat

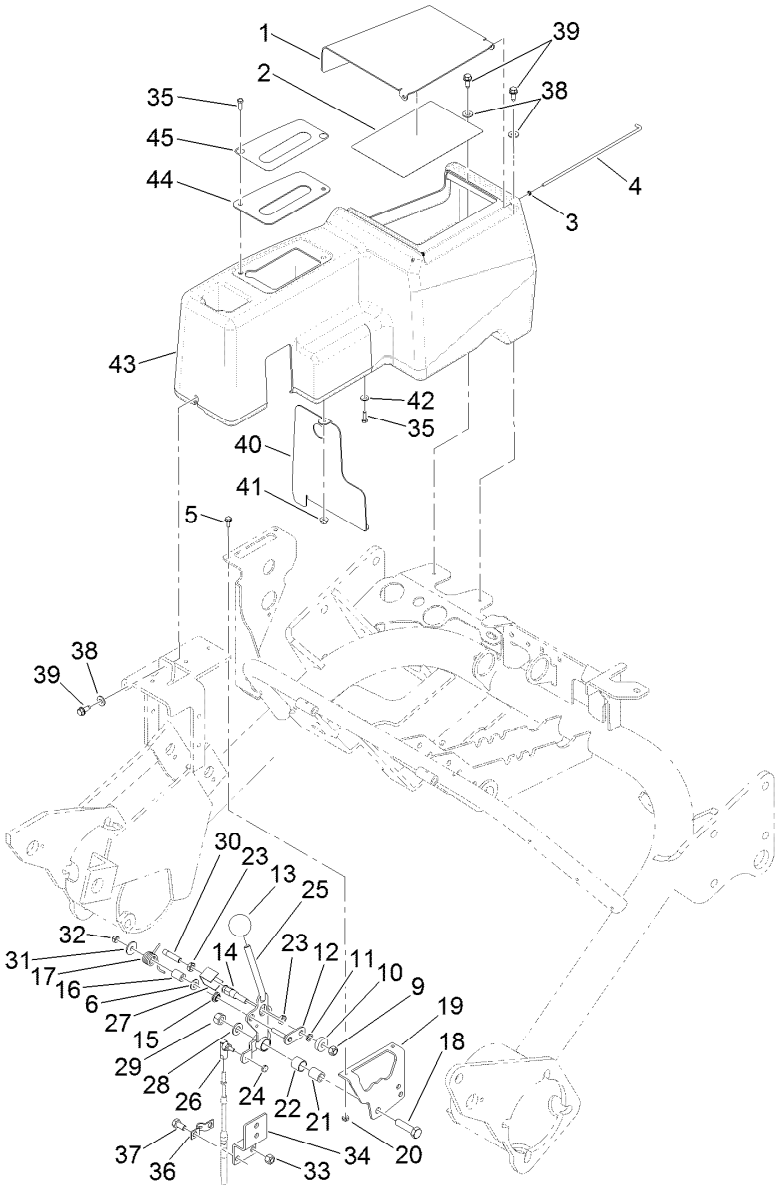

Speed Selector Lever and Console Assembly

Ref.	Part Number	Qty.	Description
1	105-8254-03	1	Lid-Console
2	115-8156	1	Decal-Speed, Clip
3	105-8283	2	Bushing
4	105-8256	1	Rod-Hinge
5	3290-321	2	Screw-HWH
6	3256-23	1	Washer-Plain
9	33024-00	1	Nut-Lock, NI
10	251-259	1	Bearing-Ball
11	75-5470	1	Spacer-Bearing
12	120-3198	1	Roller-Pivot
13	233-42	1	Knob
14	94-9617	1	Pin-Spring
15	94-9619	1	Bushing
16	94-9618	1	Spacer-Spring
17	94-9620	1	Spring-Torsion
18	33115-040	1	Screw-HH
19	94-6398	1	Bracket-Traction
20	3296-12	2	Nut-Lock, NI
21	94-1378	1	Tube-Pivot, Handle
22	256-311	1	Bushing-Split
23	117-4059	2	Nut-Hex
24	3296-27	1	Nut-Lock, NI
25	94-9611	1	Handle
26	2411-38	1	Joint-Ball
27	106-6356	1	Shield-Switch
28	3256-24	1	Washer-Flat
29	33025-00	1	Nut-Lock, NI
30	120-5348	1	Actuator-Switch
31	3256-67	1	Washer
32	33023-00	1	Nut-Lock
33	3296-29	4	Nut-Lock, NI
34	105-5417-03	1	Bracket-Cable, Shifter
35	3290-134	4	Screw
36	93-2279	1	Clamp-Cable
37	322-2	4	Screw-HH
38	3256-22	3	Washer-Flat
39	32144-10	3	Screw-HWH
40	105-8255-03	1	Baffle-Console
41	3290-148	4	Nut-HF
42	3256-77	2	Washer-Flat
43	105-8250	1	Console

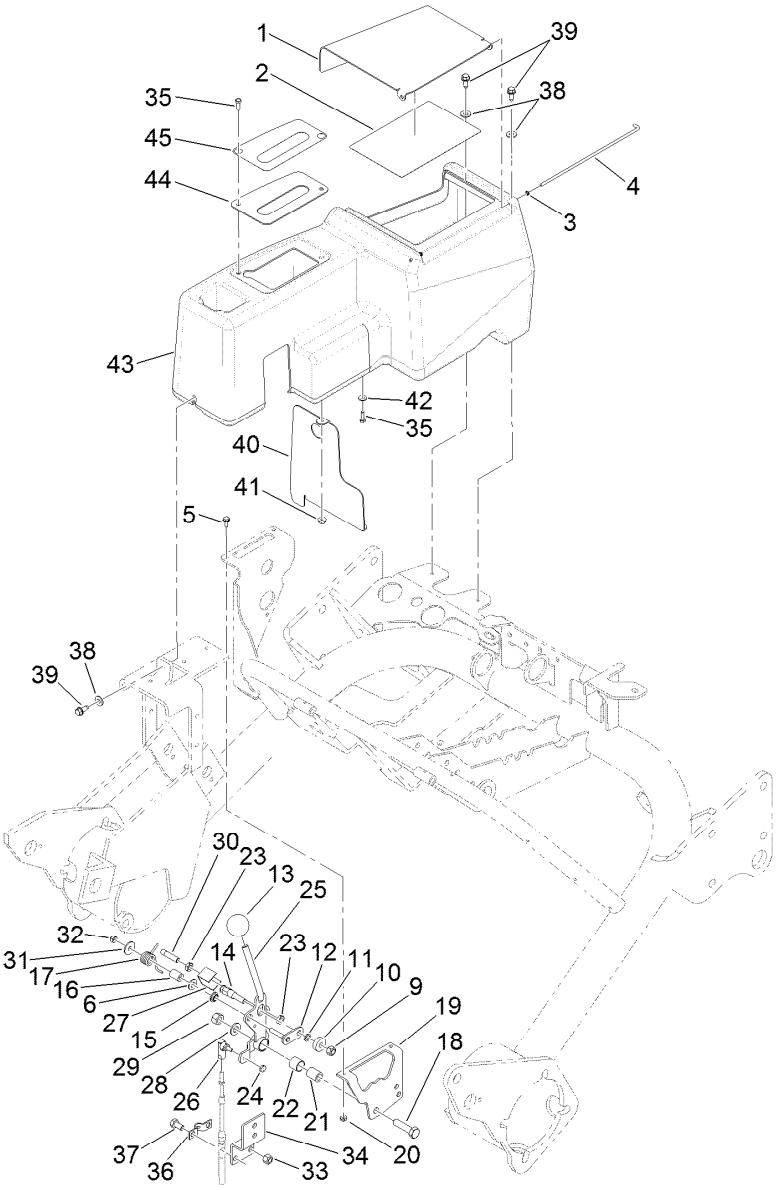

Speed Selector Lever and Console Assembly (continued)

Ref.	*Part Number*	*Qty.*	*Description*
44	105-8280-03	1	Plate-Console
45	105-8306	1	Decal-Selector, Speed

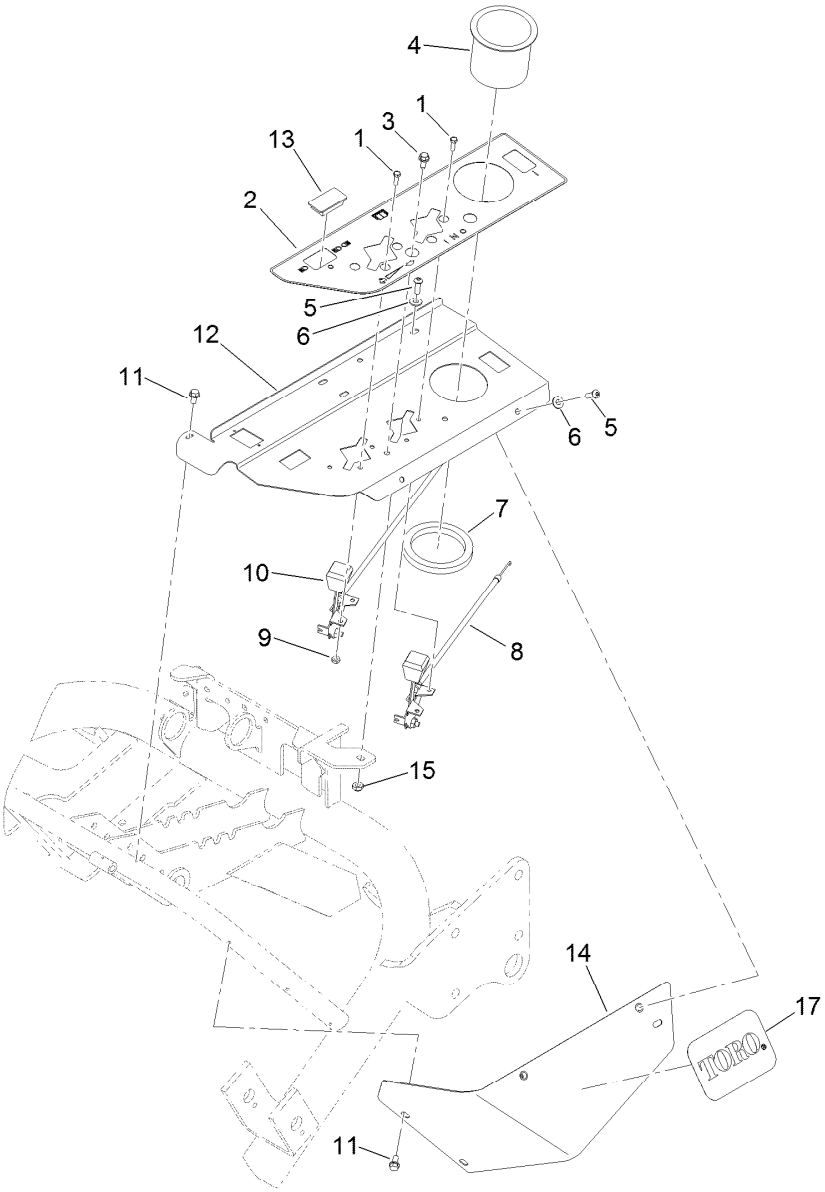

Control Panel Assembly

Ref.	Part Number	Qty.	Description
1	3290-134	4	Screw
2	131-2007	1	Decal-Panel, Control (Left)
3	32144-10	2	Screw-HWH
4	94-1410	1	Holder-Can, Beverage
5	3274-69	4	Screw-HSBH
6	3256-22	4	Washer-Flat
7	104-1476	1	Ring-Rubber
8	83-0040	1	Control-Choke

Ref.	Part Number	Qty.	Description
9	3296-12	4	Nut-Lock, NI
10	83-0030	1	Control-Throttle
11	32104-116	3	Screw-HWHTF
12	127-2246-03	1	Panel-Control
13	99-7420	1	Plug-Hole
14	105-5411	1	Shield-Cover, Valve
15	3296-16	2	Nut-Lock, NI
17	94-2579	1	Decal

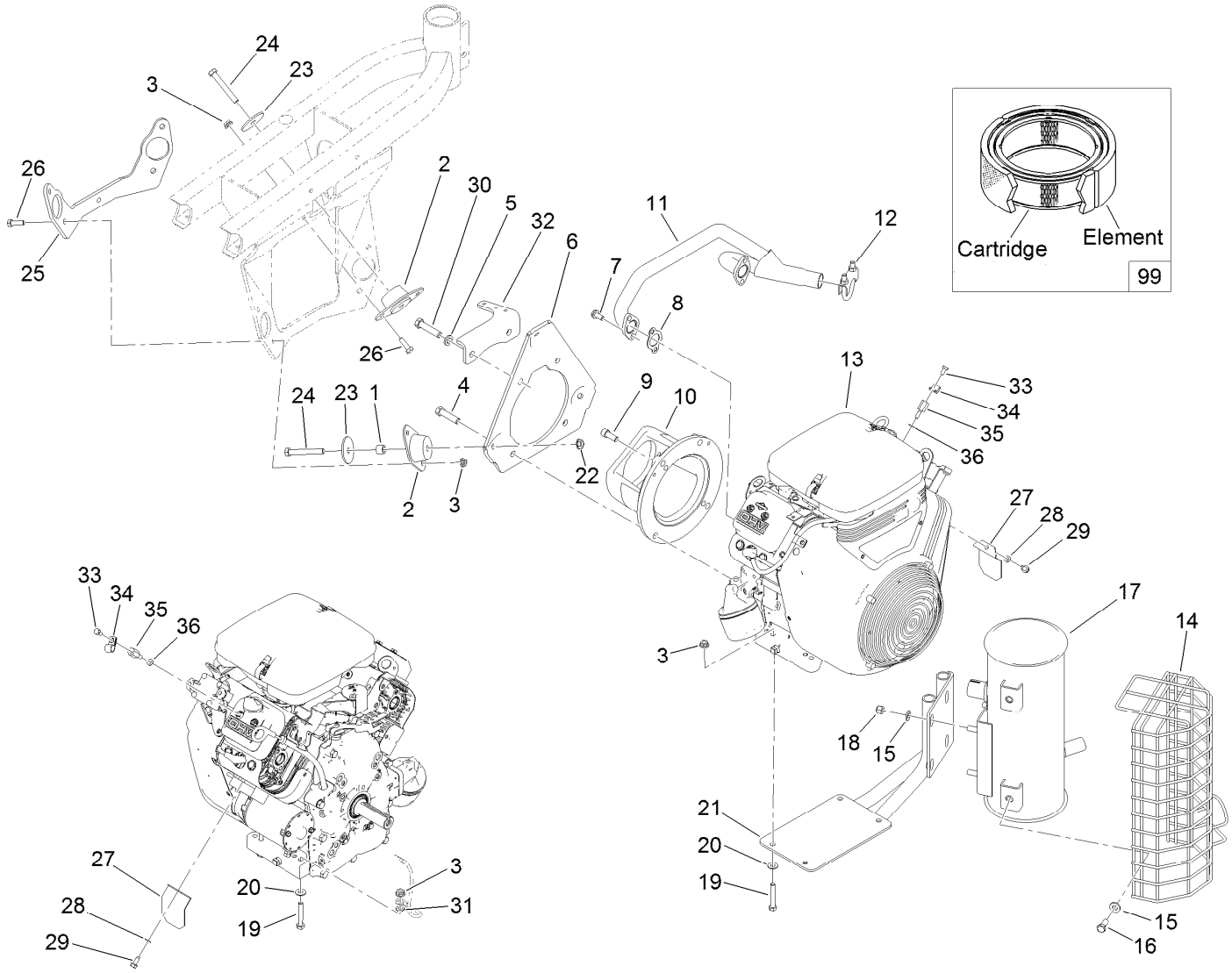

Engine Installation Assembly

Ref.	Part Number	Qty.	Description
1	93-9847	2	Spacer
2	125-5244	3	Mount-Engine
3	32128-20	10	Nut-HF
4	324-7	2	Screw-HH
5	3253-6	4	Washer-Lock
6	85-8120-03	1	Plate-Mount, Engine
7	94-5300	4	Screw-HHF
8	94-3449	2	Gasket-Manifold, Exhaust
9	3274-7	2	Screw-HSH
10	83-1060-03	1	Adapter-Pump
11	119-4128	1	Manifold-Exhaust
12	2112-11	1	Clamp-Muffler
13	130-6472	1	Engine-Briggs And Stratton ■
13:1	107-7817	1	Filter-Oil, Engine ●
14	112-0291	1	Shield-Muffler
15	100-4852	8	Washer-Hardened
16	323-5	4	Screw-HH

Ref.	Part Number	Qty.	Description
17	110-4001	1	Muffler
18	32152-2	4	Nut-Lock, Cone
19	322-10	4	Screw-HH
20	87-8640	4	Washer-Flat
21	127-6130-03	1	Mount-Muffler
22	3290-357	3	Nut-HSF
23	83-1040	3	Washer-Flat
24	323-13	3	Screw-HH
25	121-9539-01	1	Support-Engine
26	322-5	6	Screw-HH
27	83-2310	1	Shield-Regulator
28	3253-3	1	Washer-Lock
29	32144-10	1	Screw-HWH
30	324-8	2	Screw-HH
31	3255-8	1	Washer-Lock
32	105-4307-03	1	Bracket-Spring
33	33113-012	1	Screw-HH
34	2412-94	1	Clamp

● Not illustrated

■ Obtain parts from www.briggsandstratton.com

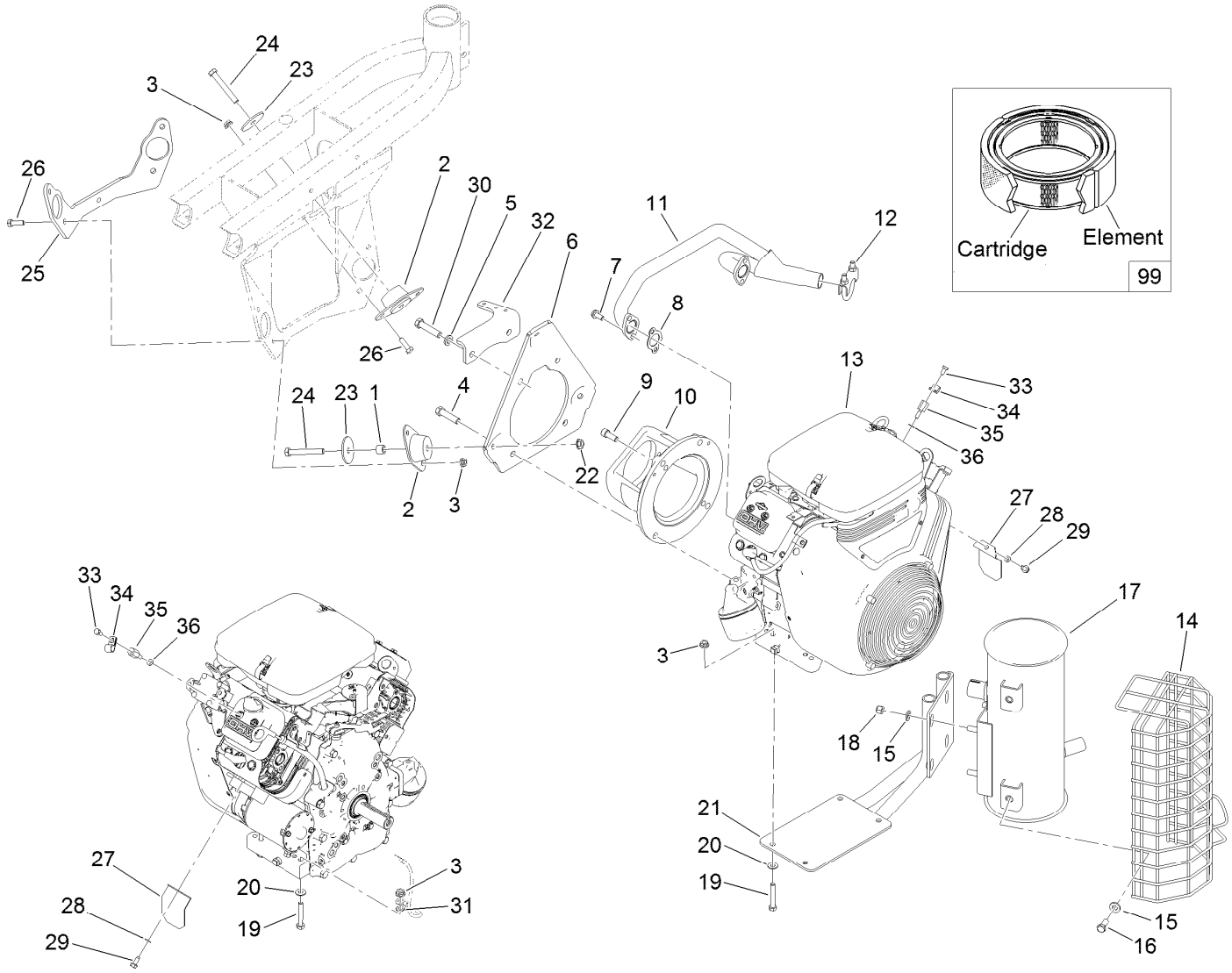

Engine Installation Assembly (continued)

Ref.	Part Number	Qty.	Description
35	106-4616	1	Screw-Spacer
36	127-2229	1	Washer-Fiber
99	107-7817	1	Filter-Oil, Engine

Ref.	Part Number	Qty.	Description
99	108-6945	2	Plug-Spark
99	92-0527	1	Cartridge-Cleaner, Air
99	92-0530	1	Element-Filter

● Not illustrated

■ Obtain parts from www.briggsandstratton.com

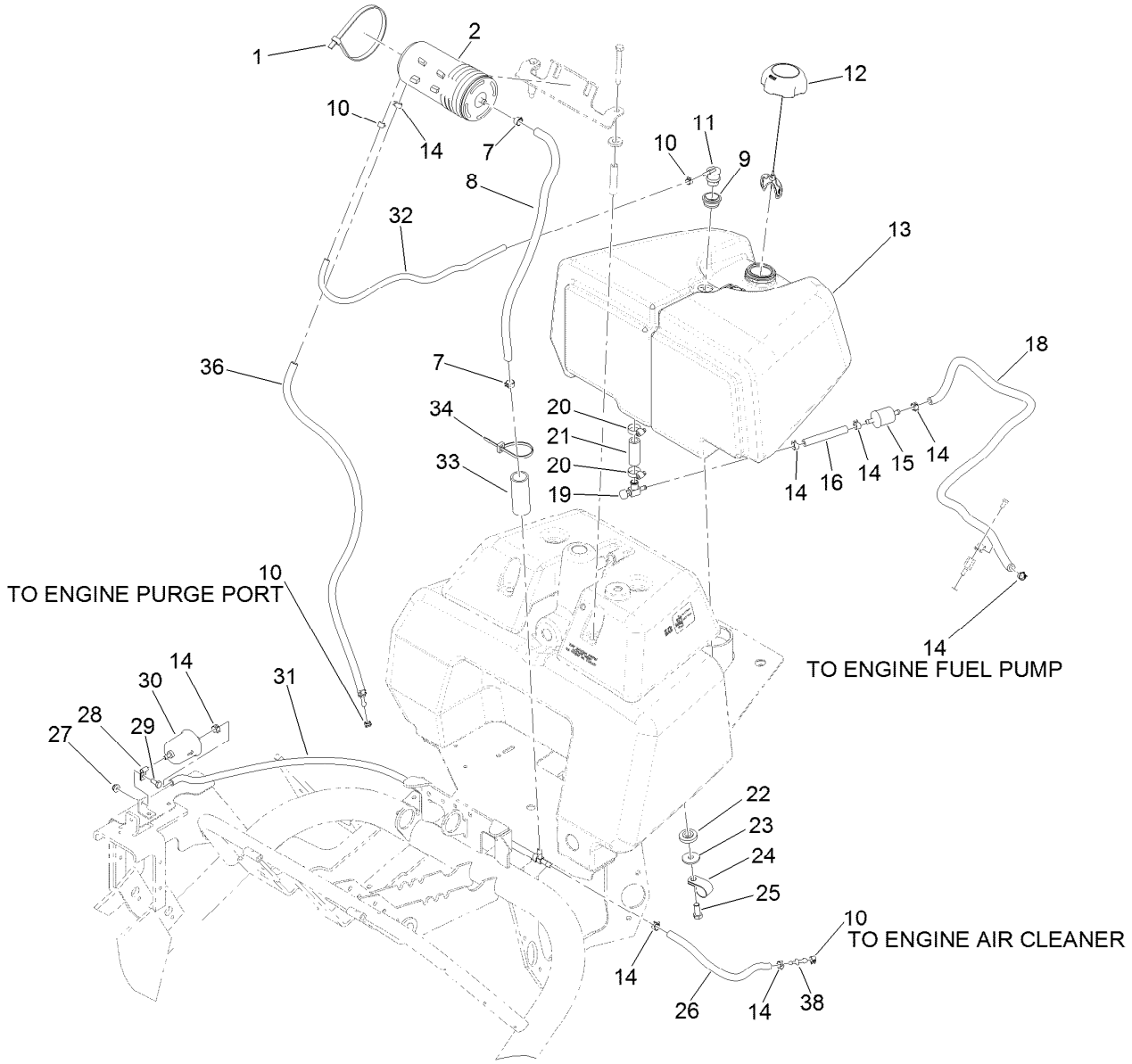

Fuel Tank Assembly

Ref.	Part Number	Qty.	Description
1	103-2446	2	Tie-Cable
2	117-1221	1	Canister-Carbon, 800Cc
7	92-2379	2	Clamp-Hose
8	114-4028	1	Hose-Fuel
9	114-0284	1	Grommet
10	2412-80	4	Clamp-Hose
11	119-3547	1	Valve-Vent, Fuel
12	115-7788	1	Cap-Fuel
13	115-5387	1	Tank-Fuel
14	2412-98	8	Clamp-Hose
15	94-2690	1	Filter-Fuel
16	109-0660	1	Hose-Fuel
18	109-0275	1	Hose-Fuel
19	83-1390	1	Valve-Shut-Off, Fuel
20	2412-36	2	Clamp-Hose
21	106-1128	1	Hose-Fuel

Ref.	Part Number	Qty.	Description
22	240-11	4	Bushing-Flange
23	63-8410	4	Washer
24	2412-41	3	Clamp-R
25	323-6	4	Screw-HH
26	109-0296	1	Hose-Fuel
27	104-7201	1	Nut-HF, NI
28	2412-72	1	Clip-Closed, Insulated
29	321-3	1	Screw-HH
30	121-2583	1	Filter-Fuel, Inline
31	121-2584	1	Hose ASM
32	119-8149	1	Hose-Fuel
33	121-2586	1	Tubing-Convoluted, Slit
34	3290-378	2	Tie-Cable
36	121-2585	1	Hose ASM
38	121-2573	1	Fitting-Straight

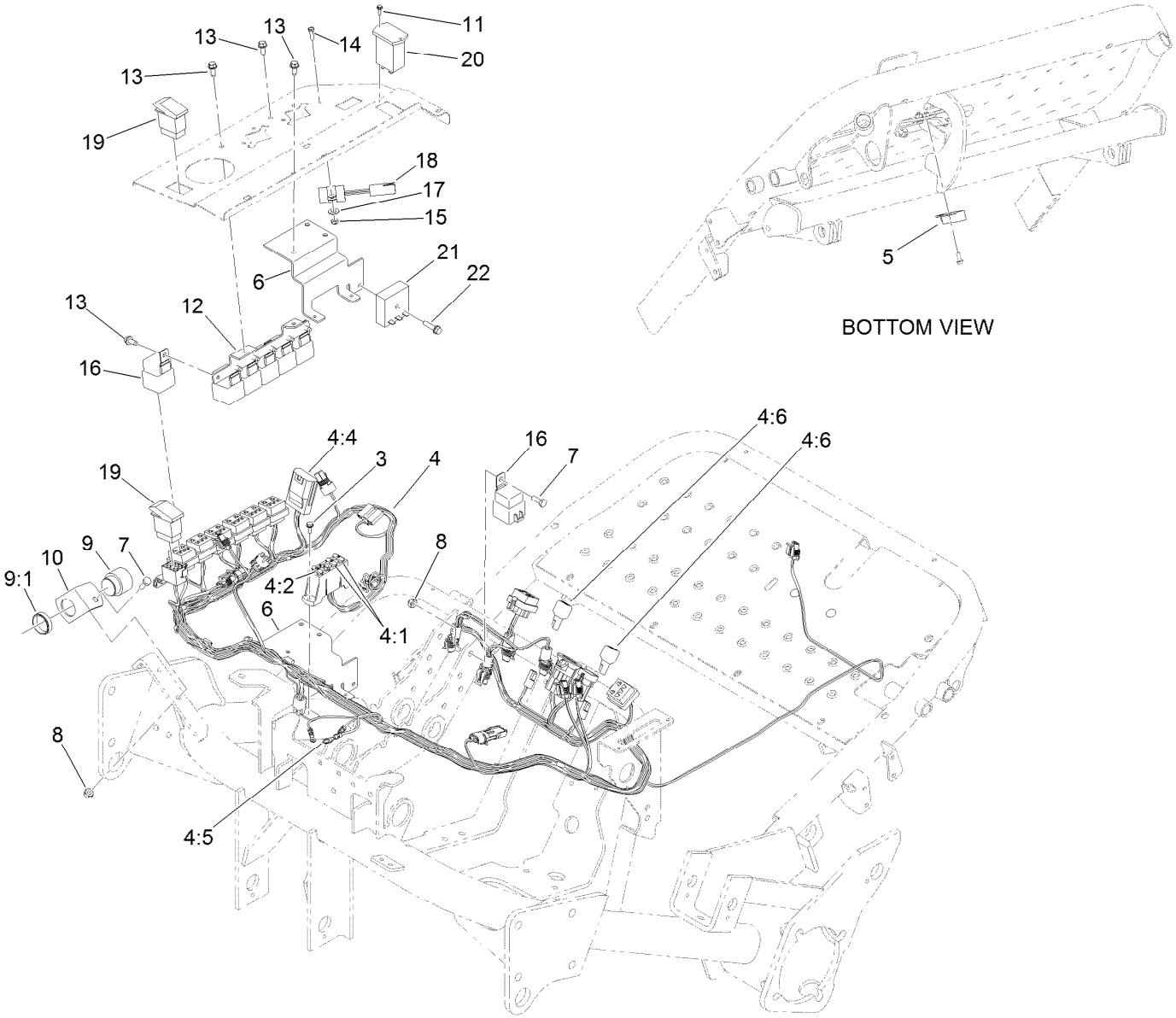

Wire Harness Assembly

Ref.	Part Number	Qty.	Description
3	32144-1	2	Screw-Taptite
4	122-0148	1	Harness-Wire
4:1	218-578	2	Fuse-Blade, 10 Amp
4:2	109101	1	Fuse-Blade, 20 Amp
4:4	92-3188	2	Diode-Board, Circuit
4:5	106-4641	1	Harness-Wire, Fusible Link
4:6	100-4918	2	Diode
5	104-2057	1	Sensor
6	105-4310-01	1	Bracket-Fuse
7	321-4	2	Screw-HH
8	3296-16	2	Nut-Lock, NI
9	80-9330	1	Audio Alarm ASM
9:1	104-5107	1	Nut-Plastic, Knurled

Ref.	Part Number	Qty.	Description
10	83-1530	1	Bracket-Support, Buzzer
11	32144-18	2	Screw-HWH
12	105-4306-03	1	Bracket-Relay
13	32144-10	9	Screw-HWH
14	3290-134	1	Screw
15	3296-12	1	Nut-Lock, NI
16	99-7430	7	Relay-Mini
17	3256-22	1	Washer-Flat
18	83-2280	1	Timer-Delay
19	106-2027	1	Switch-Intermittent
20	75-6820	1	Hourmeter
21	92-2538	1	Module-Timer
22	32144-86	1	Screw-HWHTF

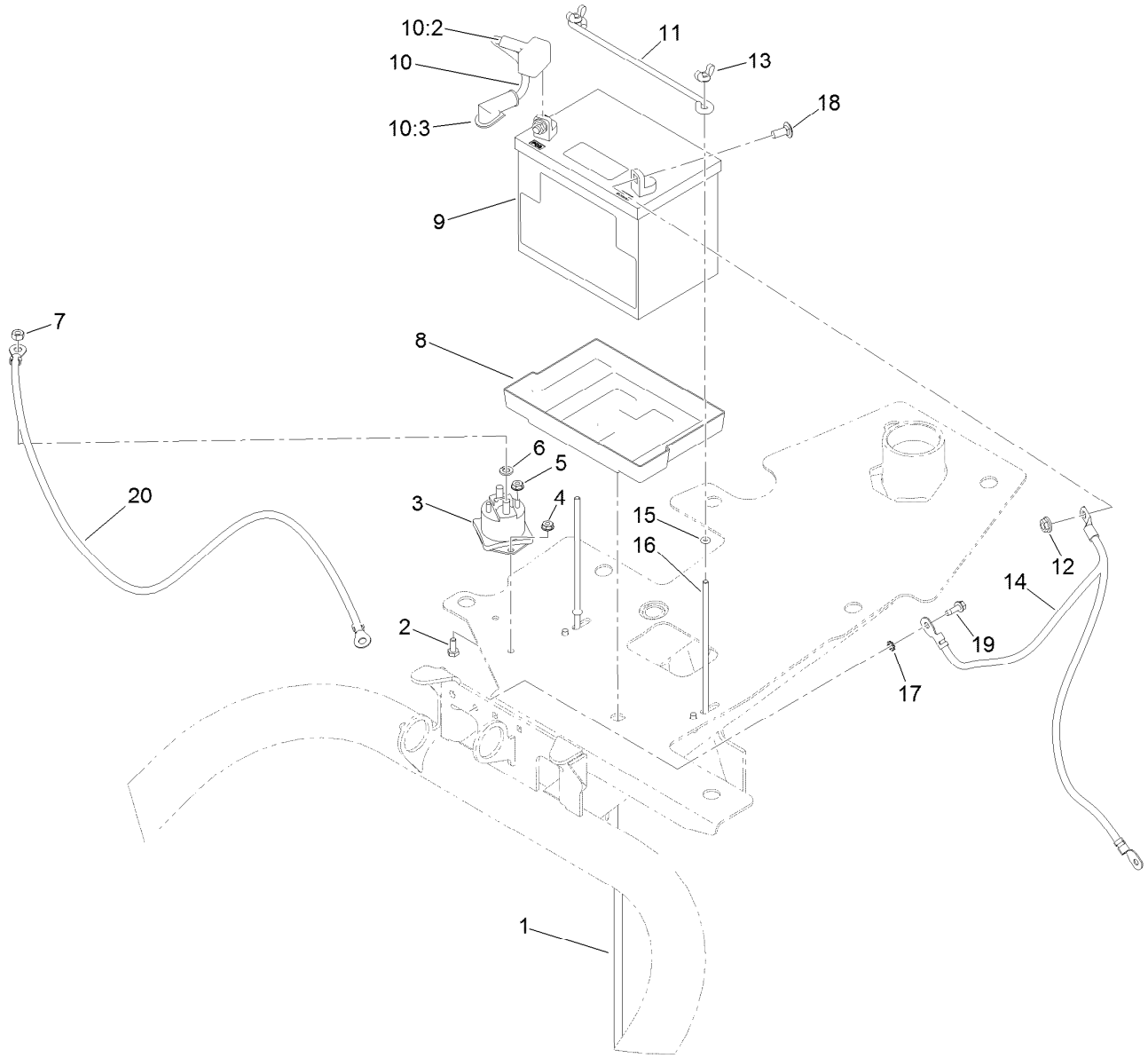

Battery Assembly

Ref.	Part Number	Qty.	Description
1	104-2061	1	Tube-Drain, Battery
2	321-3	2	Screw-HH
3	28-4210	1	Solenoid
4	32149-2	2	Nut-Keps
5	32149-8	2	Nut-Keps
6	3253-4	2	Washer-Lock
7	3218-13	2	Nut-Jam, Brass
8	106948	1	Tray-Battery
9	104-8162	1	Battery
10	83-2420	1	Positive Cable ASM
10:2	28-8080	1	Boot-Terminal

Ref.	Part Number	Qty.	Description
10:3	83-2430	1	Boot-Terminal
11	100-6434	1	Rod-Hold Down, Battery
12	32128-20	2	Nut-HF
13	32103-22	2	Nut-Wing
14	122-0370	1	Cable-Battery, Negative
15	237-143	2	O-Ring
16	100-6435	2	Post-Battery
17	3255-7	1	Washer-Lock/EXT
18	3230-23	2	Bolt-CARR
19	32104-95	1	Screw-HWH
20	98-2161	1	Cable-Battery, Positive

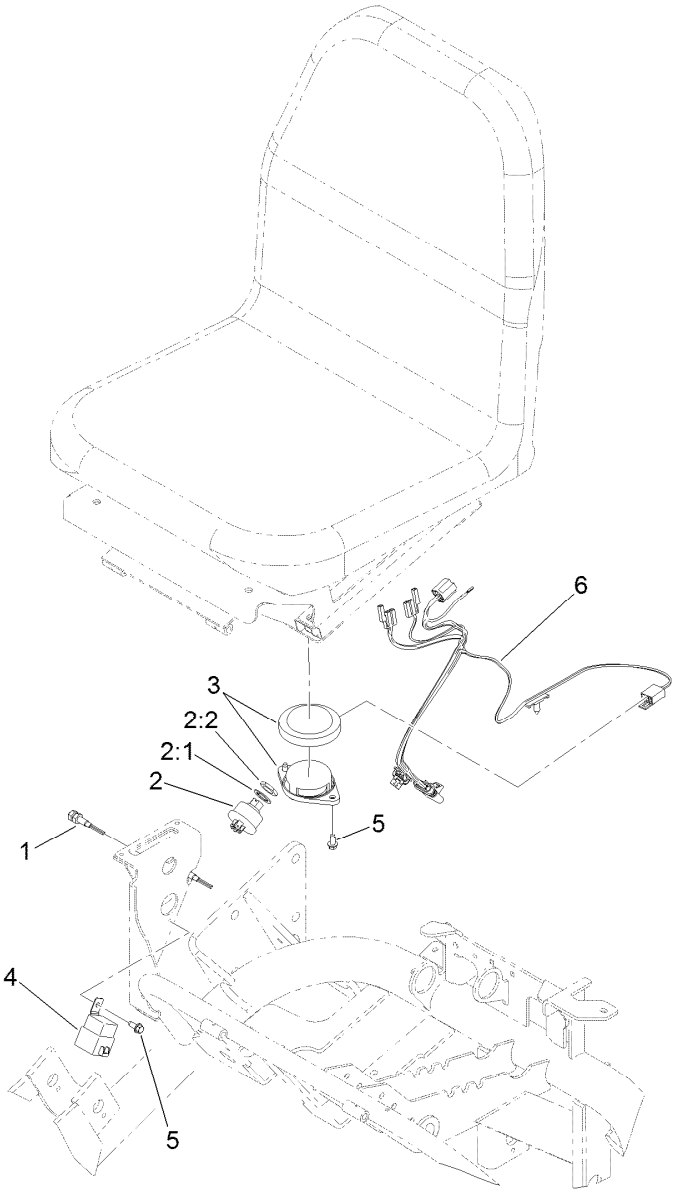

Ignition and Seat Switch Assembly

Ref.	*Part Number*	*Qty.*	*Description*
1	112-0278	2	Switch-Reed
2	104-2541	1	Ignition Switch ASM
2:1	218-461	1	Nut-HH
2:2	3254-5	1	Washer-Lock
3	92-6282	1	Switch-Seat
4	99-7430	1	Relay-Mini
5	32144-10	3	Screw-HWH
6	108-9466	1	Harness-Wire, Seat

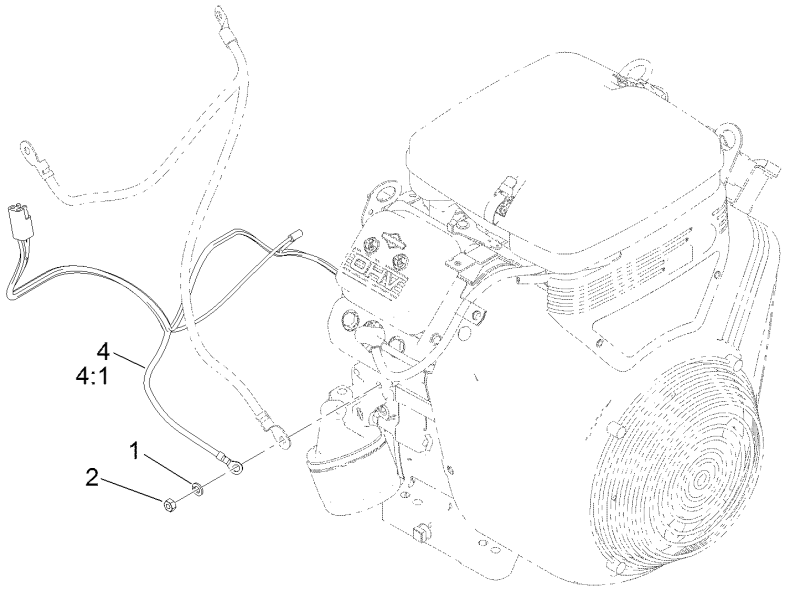

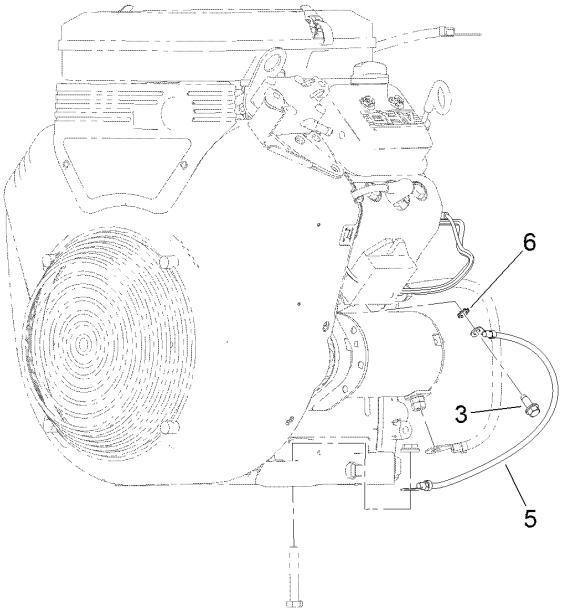

Engine Wire Harness Assembly

Ref.	*Part Number*	*Qty.*	*Description*
1	3253-3	1	Washer-Lock
2	43-2830	1	Nut-Hex
3	32144-10	1	Screw-HWH
4	105-8276	1	Harness-Wire, Engine
4:1	106-4642	1	Harness-Wire, Fusible Link
5	108-6486	1	Wire-Ground
6	3255-7	1	Washer-Lock/EXT

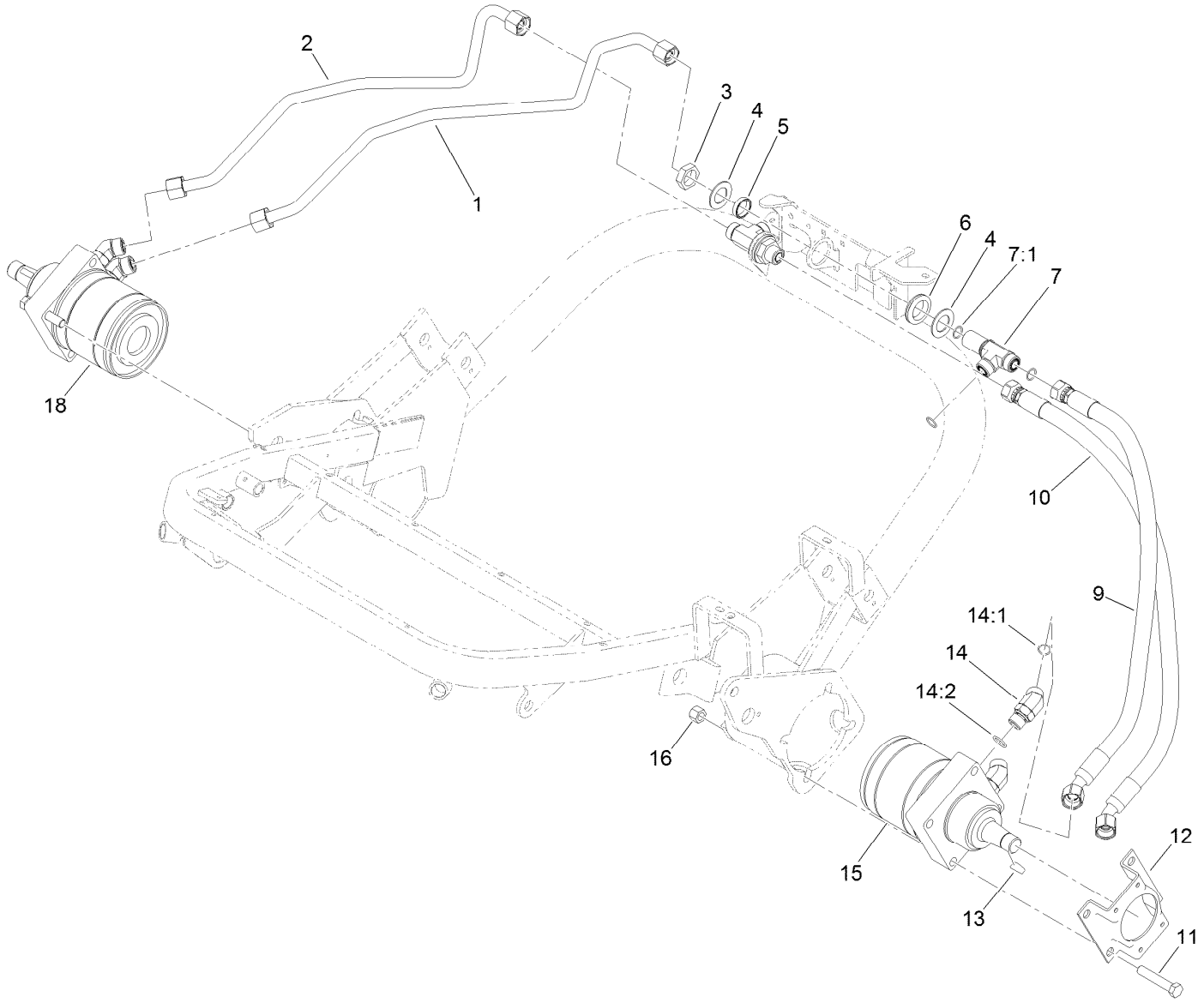

Ground Drive Assembly

Ref.	Part Number	Qty.	Description
1	112-0204	1	Tube-HYD
2	112-0203	1	Tube-HYD
3	340-74	2	Nut-Lock, Bulkhead
4	69-9010	4	Washer
5	125-1984	2	Spacer
6	240-3	2	Grommet-Rubber
7	94-5350	2	Fitting-Tee
7:1	237-65	3	O-Ring
9	105-4336	1	Hose-HYD
10	105-4333	1	Hose-HYD

Ref.	Part Number	Qty.	Description
11	325-11	8	Screw-HH
12	84-2000-03	2	Bracket-Brake
13	3257-42	2	Key-Woodruff
14	340-14	4	Fitting-HYD, 45 DEG
14:1	237-65	1	O-Ring
14:2	237-80	1	O-Ring
15	110-4015	1	HYD Motor ASM (CCW)
16	3296-23	8	Nut-Lock, NI
18	110-4016	1	HYD Motor ASM (CW)

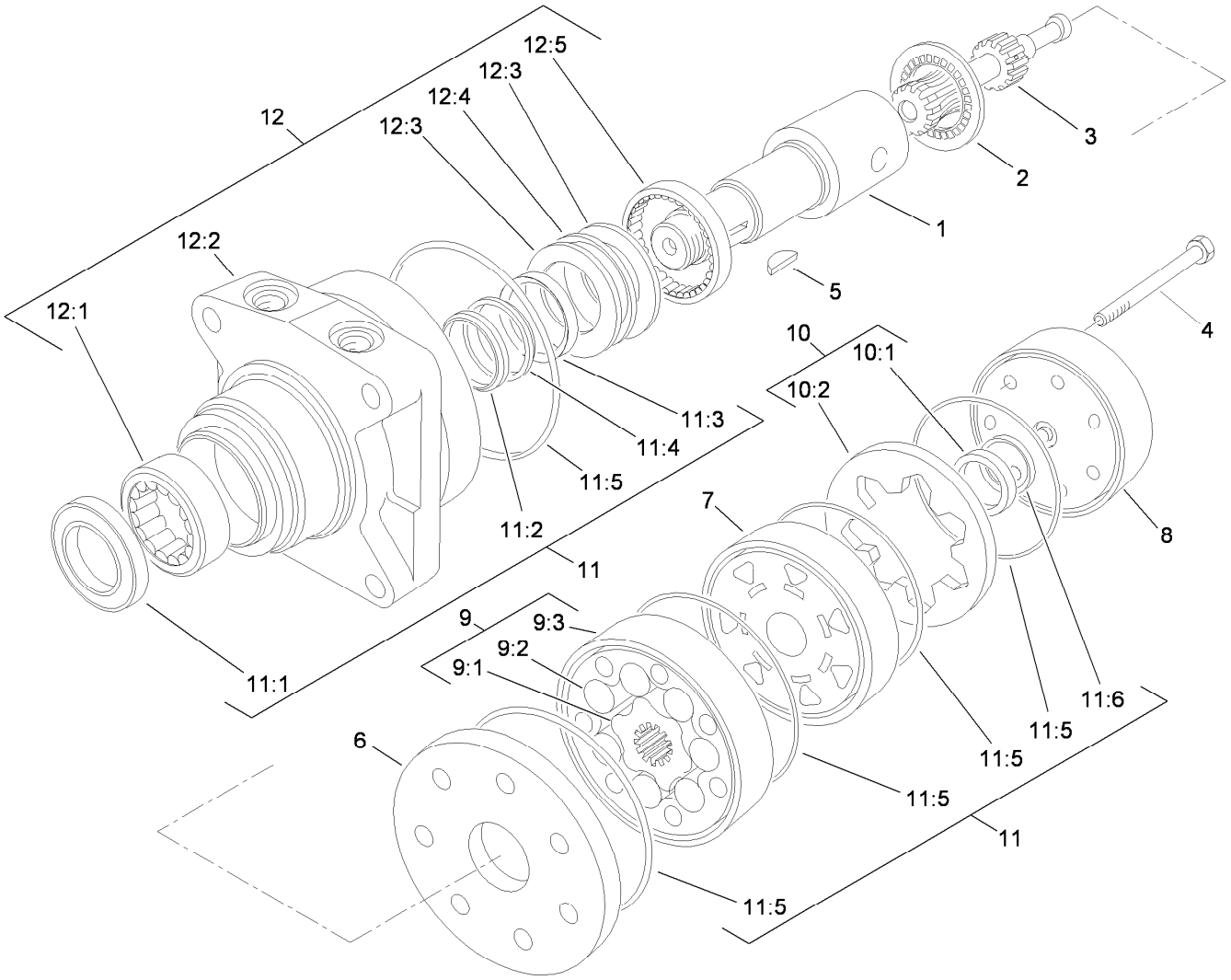

Hydraulic Motor Assembly (CCW) No. 110-4015

Ref.	Part Number	Qty.	Description
1	76-0860	1	Shaft-Coupling
2	76-0850	1	Bearing-Thrust
3	92-9761	1	Link-Drive
4	92-9762	7	Screw-HH
5	3257-42	1	Key-Woodruff
6	92-9754	1	Plate-Wear
7	76-0840	1	Manifold
8	76-0940	1	End Cover ASM
9	92-9763	1	Rotor Set
9:1		1	Rotor ●
9:2		1	Vane ●
9:3		1	Stator ●
10	76-0880	1	Commutator ASM
10:1		1	Commutator ●

Ref.	Part Number	Qty.	Description
10:2		1	Ring-Commutator ●
11	94-8178	1	Seal Kit
11:1		1	Seal-Dirt And Water ●
11:2		1	Backup-Ring ●
11:3		1	Seal-Shaft ●
11:4		1	Washer-Backup ●
11:5		5	Seal-Square, Ring (Inner) ●
11:6		1	Seal-Commutator ●
12	76-0810	1	Housing ASM
12:1		1	Bearing ●
12:2		1	Housing ●
12:3		2	Washer-Thrust ●
12:4		1	Bearing-Thrust ●
12:5		1	Bearing ●

● Not serviced separately

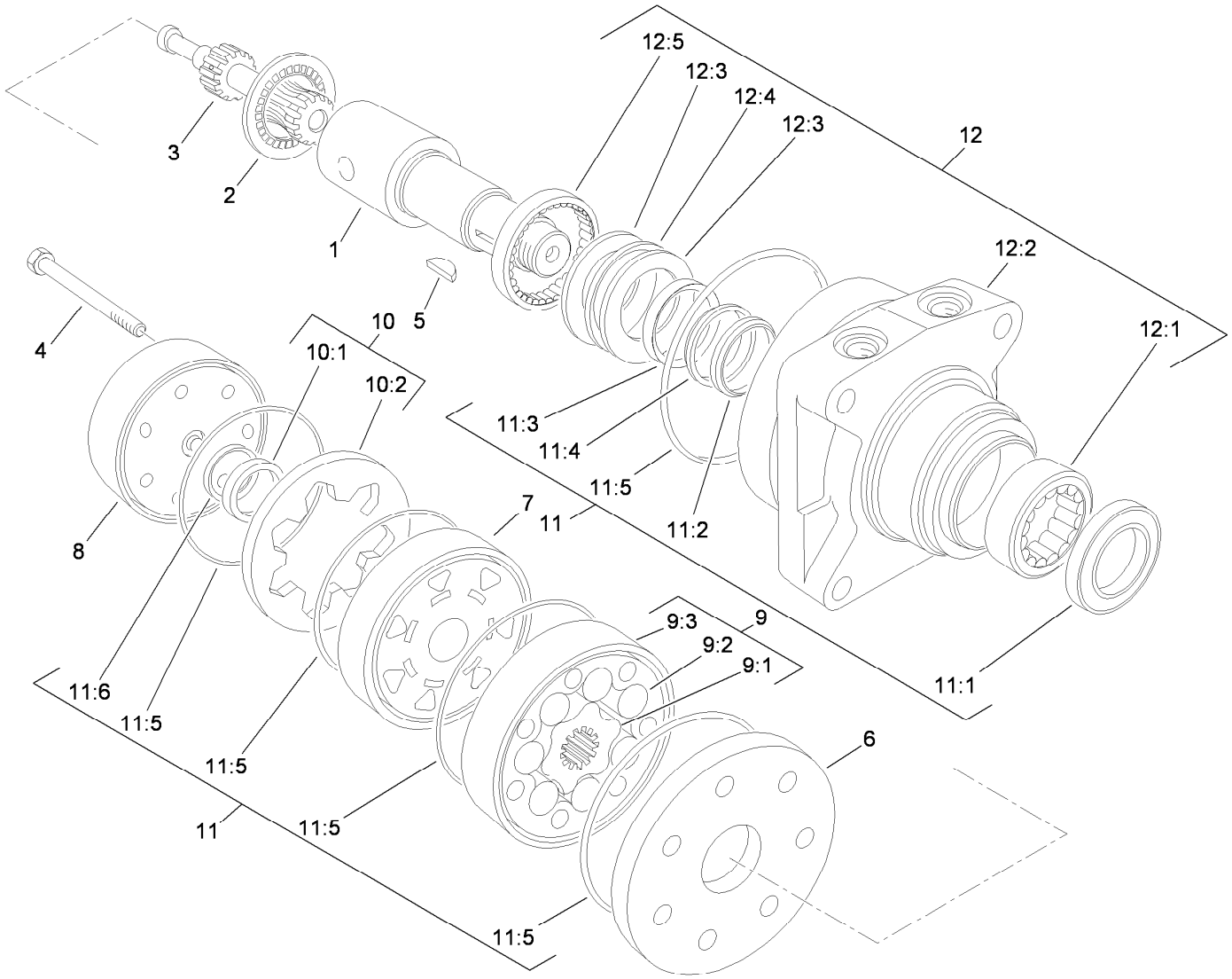

Hydraulic Motor Assembly (CW) No. 110-4016

Ref.	Part Number	Qty.	Description
1	76-0860	1	Shaft-Coupling
2	76-0850	1	Bearing-Thrust
3	92-9761	1	Link-Drive
4	92-9762	7	Screw-HH
5	3257-42	1	Key-Woodruff
6	92-9754	1	Plate-Wear
7	76-0840	1	Manifold
8	76-0940	1	End Cover ASM
9	92-9763	1	Rotor Set
9:1		1	Rotor ●
9:2		1	Vane ●
9:3		1	Stator ●
10	76-0880	1	Commutator ASM
10:1		1	Commutator ●

Ref.	Part Number	Qty.	Description
10:2		1	Ring-Commutator ●
11	94-8178	1	Seal Kit
11:1		1	Seal-Dirt And Water ●
11:2		1	Backup-Ring ●
11:3		1	Seal-Shaft ●
11:4		1	Washer-Backup ●
11:5		5	Seal-Square, Ring (Inner) ●
11:6		1	Seal-Commutator ●
12	76-0810	1	Housing ASM
12:1		1	Bearing ●
12:2		1	Housing ●
12:3		2	Washer-Thrust ●
12:4		1	Bearing-Thrust ●
12:5		1	Bearing ●

● Not serviced separately

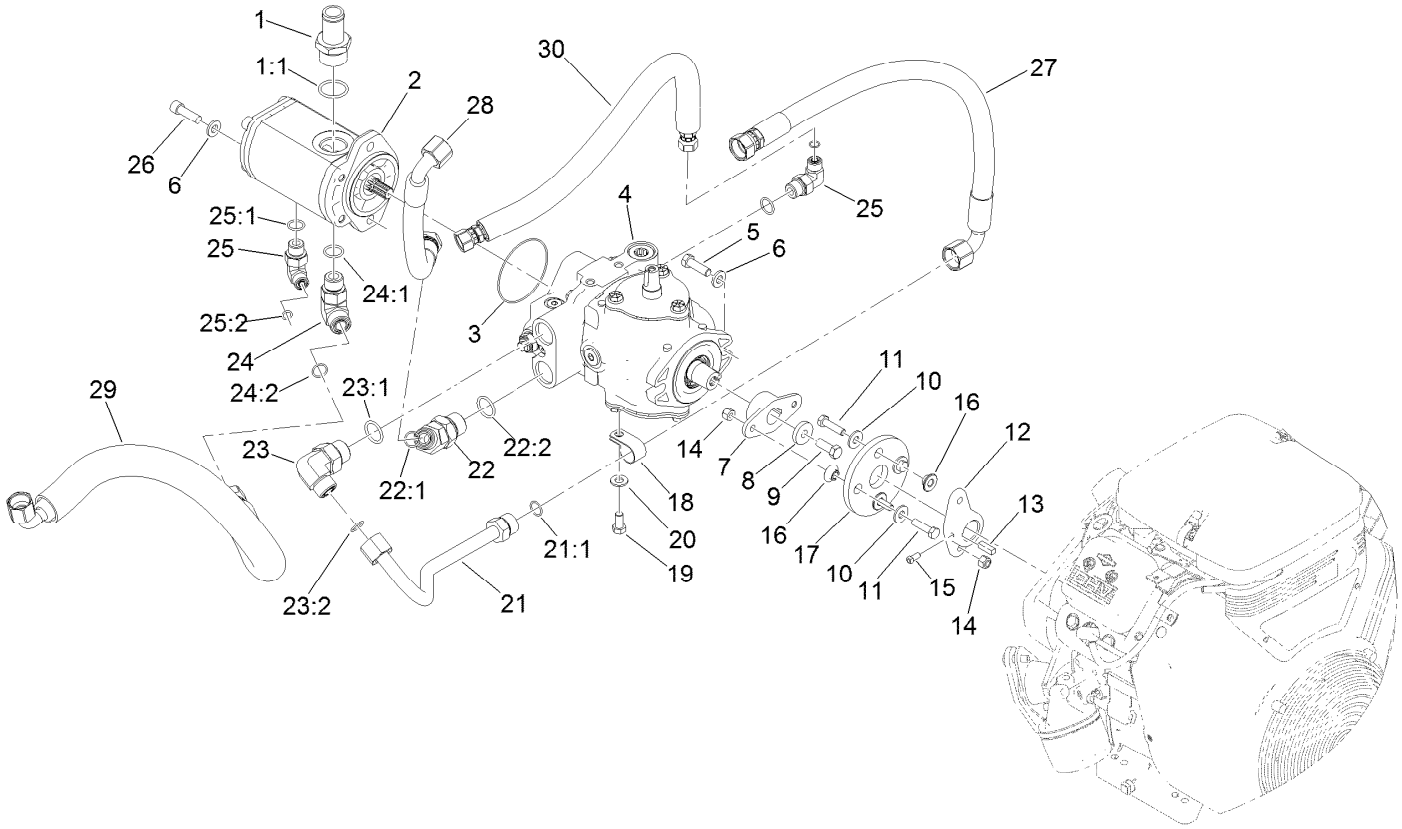

Hydrostat and Gear Pump Drive Assembly

Ref.	Part Number	Qty.	Description
1	354-78	1	Fitting-STR
1:1	237-146	1	O-Ring
2	114-9956	1	HYD Gear Pump ASM
3	353-949	1	O-Ring
4	121-9557	1	Pump-Hydro
5	323-7	2	Screw-HH
6	100-4852	4	Washer-Hardened
7	119-4485	1	Hub-Pump
8	53-7930	1	Spacer-Pivot
9	3211-4	1	Screw-HH
10	3256-3	4	Washer-Flat
11	322-6	4	Screw-HH
12	110-5236	1	Hub-Engine
13	10-7070	1	Key-Square
14	3296-29	4	Nut-Lock, NI
15	3241-7	2	Screw-SQH
16	125-9249	4	Spacer-Coupler, Rubber
17	115-4523	1	Coupling-Rubber
18	2412-41	1	Clamp-R
19	323-4	1	Screw-HH

Ref.	Part Number	Qty.	Description
20	3256-24	1	Washer-Flat
21	121-2561	1	Tube-HYD
21:1	237-65	1	O-Ring
22	340-156	1	Fitting-Elbow 45
22:1	237-65	1	O-Ring
22:2	237-81	1	O-Ring
23	340-139	1	Fitting-Elbow 90
23:1	237-81	1	O-Ring
23:2	237-65	1	O-Ring
24	340-17	1	Fitting-Elbow, 90 DEG
24:1	237-65	1	O-Ring
24:2	237-80	1	O-Ring
25	340-18	2	Fitting-HYD, 90 DEG
25:1	237-79	1	O-Ring
25:2	237-22	1	O-Ring
26	3274-1	2	Screw-HSH
27	99-6193	1	Hose ASM
28	105-4332	1	Hose-HYD
29	131-2042	1	Hose-HYD
30	131-2041	1	Hose ASM

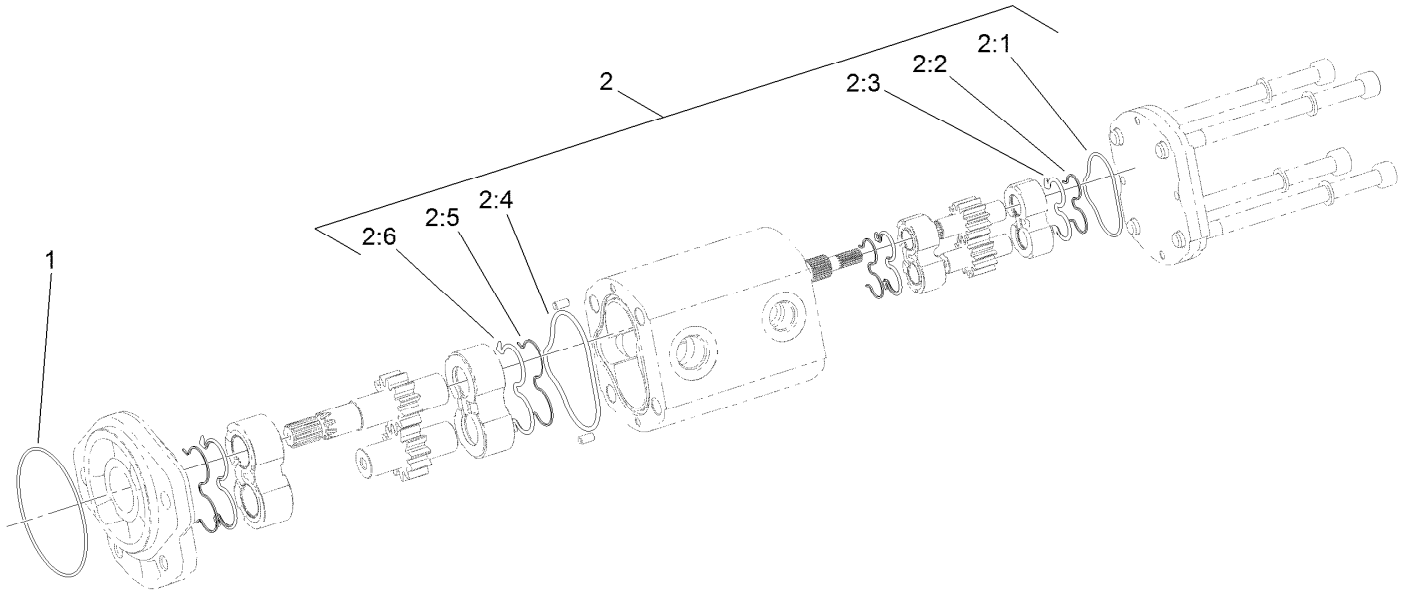

Hydraulic Gear Pump Assembly No. 114-9956

Ref.	*Part Number*	*Qty.*	*Description*
1	353-949	1	O-Ring
2	119-7134	1	Kit-Seal
2:1		1	O-Ring ●
2:2		2	Seal-Extrusion, Anti ●
2:3		2	Seal-Backup ●
2:4		1	O-Ring ●
2:5		2	Seal-Extrusion, Anti ●
2:6		2	Seal-Backup ●

● Not serviced separately

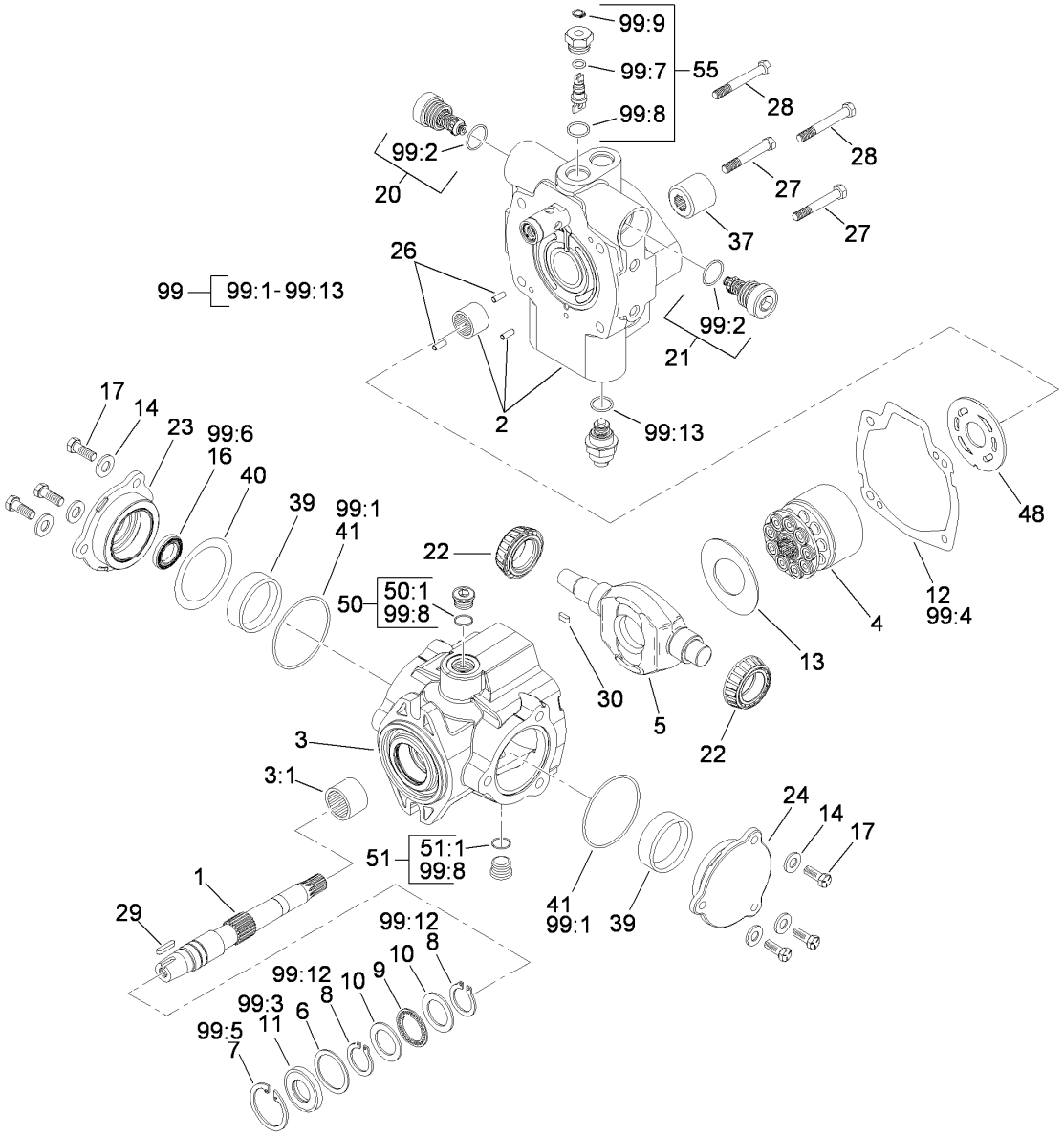

Hydraulic Pump Assembly No. 121-9557

Ref.	Part Number	Qty.	Description
1	119-7148	1	Shaft-Drive, Tapered
2	121-9574	1	Endcover ASM
3	100-3176	1	Housing ASM
3:1	94-6363	1	Bearing
4	76-6070	1	Rotating Kit
5	100-3175	1	Camplate
6	33-3720	1	Washer
7	32151-13	1	Ring-Retaining
8	32151-29	2	Ring-Retaining
9	252-66	1	Bearing-Thrust
10	252-71	2	Washer-Thrust
11	104-4861	1	Seal-Shaft
12	33-4930	1	Gasket-Housing
13	98-4635	1	Insert-Plate, Cam
14	105-9762	6	Washer
16	76-6190	1	Seal-Shaft
17	98-4640	6	Screw-Cap
20	120-1989	1	Relief Valve ASM

Ref.	Part Number	Qty.	Description
21	120-1989	1	Relief Valve ASM
22	98-4639	2	Bearing-Cone
23	98-4645	1	Plate-Cover
24	98-4644	1	Plate-Cover
26	76-6150	2	Pin-Dowel
27	76-6160	2	Capscrew
28	76-6170	2	Capscrew
29	120-5751	1	Key
30	94-3646	1	Key
37	74-9040	1	Coupler
39	104-4046	2	Bearing-Cup
40	100-3182	1	Shim Kit
41	100-3179	2	O-Ring
48	100-3180	1	Plate-Valve
50	74-9280	1	Plug ASM
50:1		1	O-Ring ■
51	74-9280	1	Plug ASM
51:1		1	O-Ring ■

● Not illustrated

■ Not serviced separately

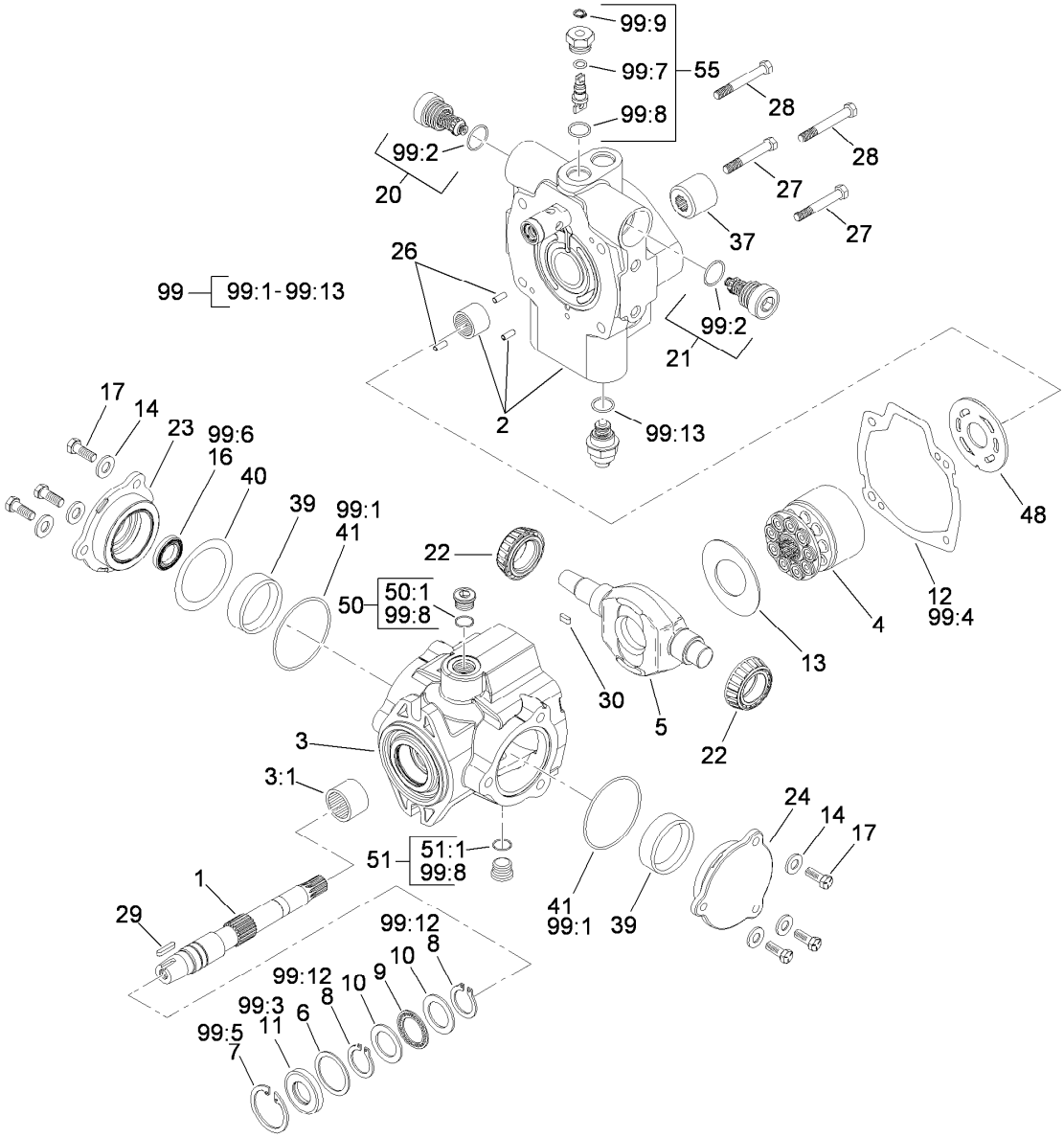

Hydraulic Pump Assembly No. 121-9557 (continued)

Ref.	Part Number	Qty.	Description
55	105-3811	1	Valve-Bypass
99	120-5754	1	Seal Kit
99:1		2	O-Ring ■
99:2		2	O-Ring ■
99:3		1	Seal-Shaft ■
99:4		1	Gasket ■
99:5		1	Ring-Retaining ■
99:6		1	Seal-Shaft ■

Ref.	Part Number	Qty.	Description
99:7		1	O-Ring ■
99:8		5	O-Ring ■
99:9		1	Ring-Retaining ■
99:10		1	O-Ring ● ■
99:11		1	O Ring-Molded ● ■
99:12		2	Ring-Retaining ■
99:13		1	O-Ring ● ■

● Not illustrated

■ Not serviced separately

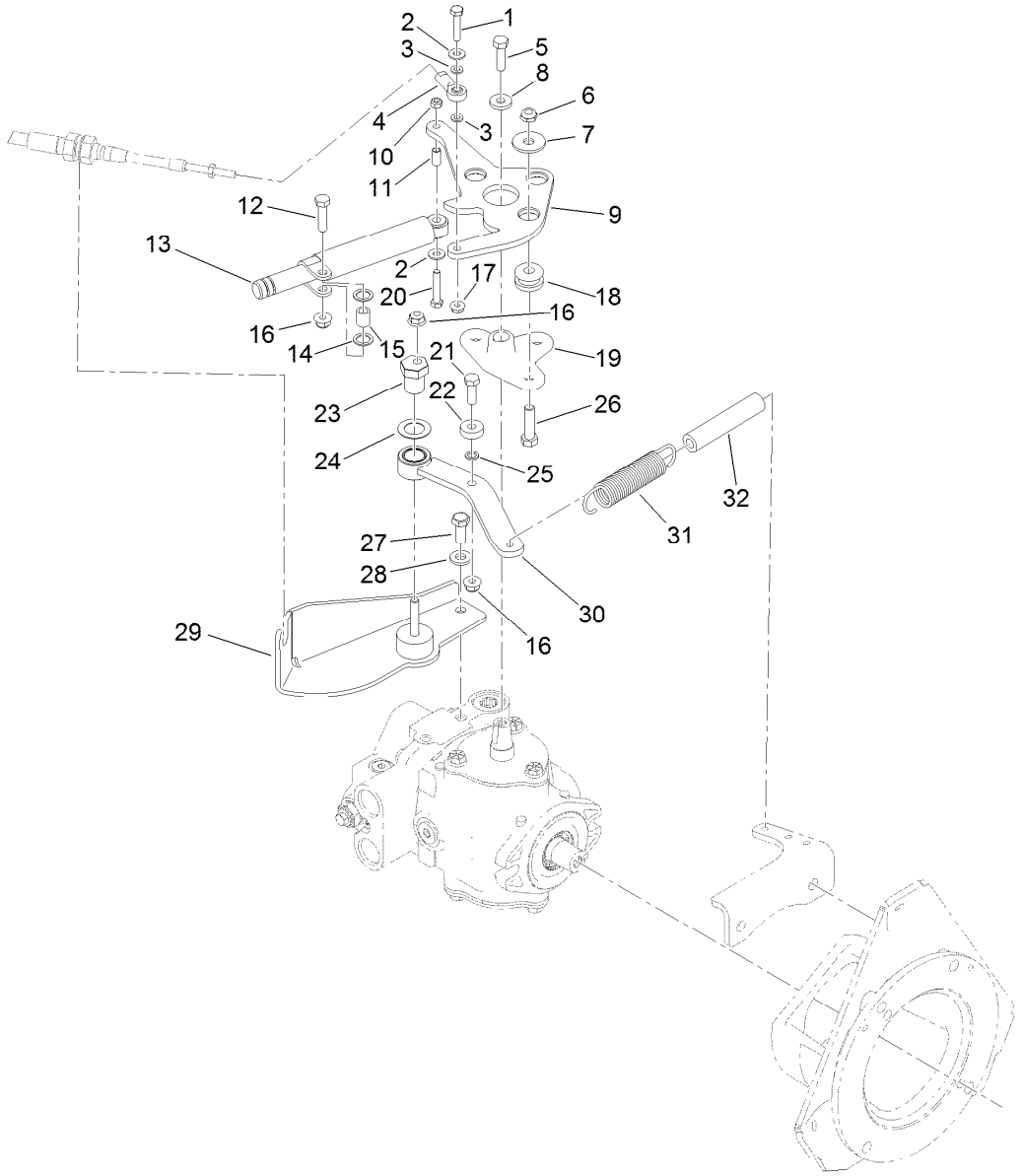

Neutral System Assembly

Ref.	Part Number	Qty.	Description
1	321-8	1	Screw-HH
2	3256-22	2	Washer-Flat
3	33093-00	2	Washer-Flat
4	2411-41	1	Rod End-Ball Joint
5	3210-6	1	Screw-HH
6	3296-59	3	Nut-Lock, NI
7	93-8806	3	Washer-Hardened
8	88-7200	1	Washer-Flat
9	105-5477-03	1	Lever-Pump
10	33023-00	1	Nut-Lock
11	94-1312	1	Spacer-Pivot
12	322-6	1	Screw-HH
13	76-8870	1	Damper-Lever
14	94-8196	2	Washer-Nylon
15	94-8197	1	Tube-Pivot
16	104-8300	3	Nut-HF, NI

Ref.	Part Number	Qty.	Description
17	104-7201	1	Nut-HF, NI
18	63-9750	3	Mount
19	117-9500	1	Plate-Pivot
20	33113-035	1	Screw-HH
21	322-5	1	Screw-HH
22	251-259	1	Bearing-Ball
23	93-2111	1	Stud-Traction
24	3-6498	1	Washer-Thrust
25	75-5470	1	Spacer-Bearing
26	323-29	3	Screw-HH
27	323-5	2	Screw-HH
28	100-4852	2	Washer-Hardened
29	105-5475	1	Cable Support ASM
30	105-4302	1	Neutral Arm ASM
31	94-1369	1	Spring-Extension
32	99-4251	1	Hose-Dampener

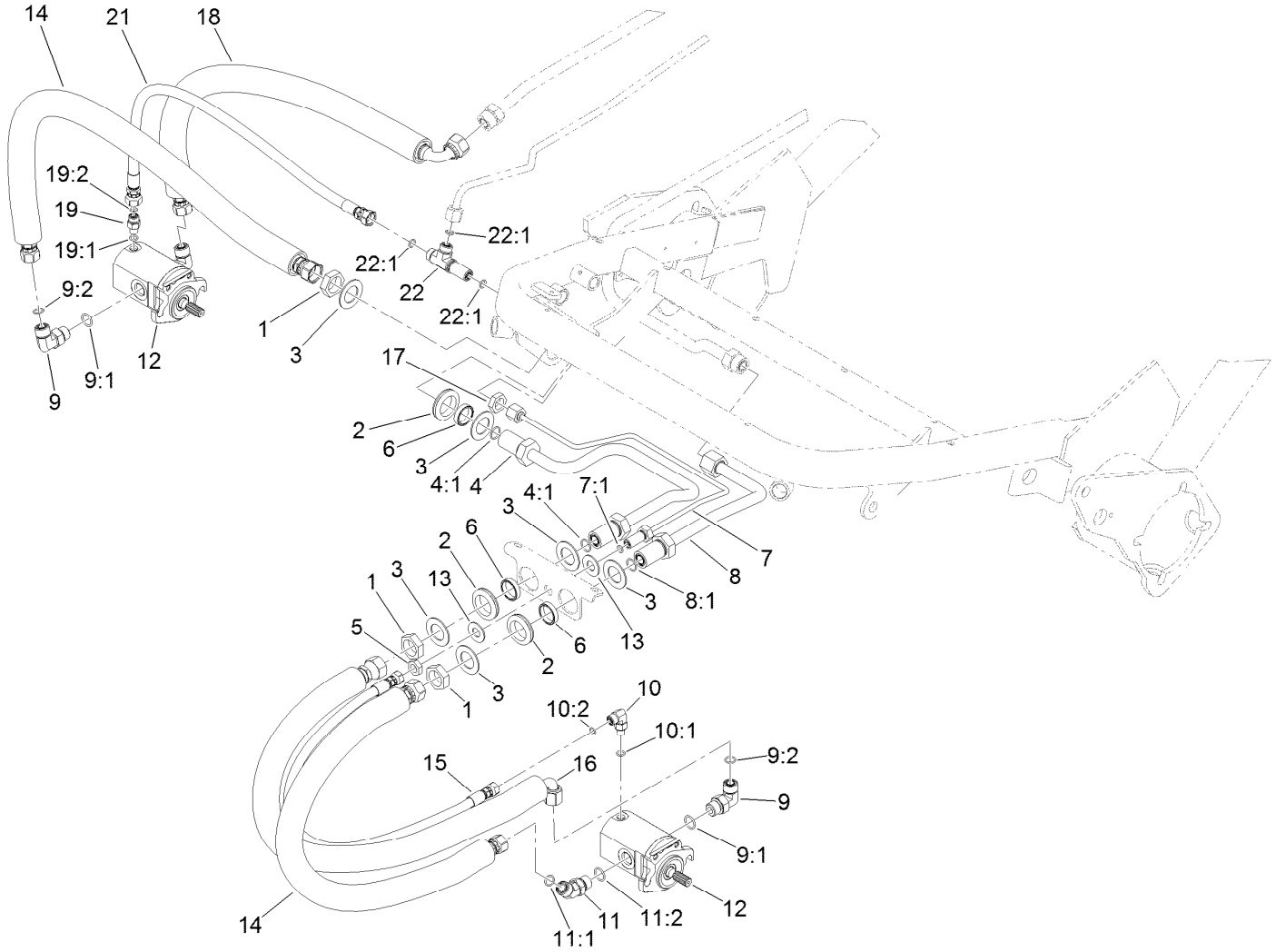

Front Hydraulic Reel Drive and Hose Assembly

Ref.	Part Number	Qty.	Description
1	340-74	3	Nut-Lock, Bulkhead
2	240-3	3	Grommet-Rubber
3	69-9010	6	Washer
4	107-2580	1	Tube-HYD
4:1	237-65	2	O-Ring
5	340-78	1	Nut-Lock
6	125-1984	3	Spacer
7	127-2227	1	Tube-HYD
7:1	237-21	1	O-Ring
8	107-2581	1	Tube-HYD
8:1	237-65	1	O-Ring
9	340-98	3	Fitting-Elbow, 90 DEG
9:1	237-79	1	O-Ring
9:2	237-30	1	O-Ring
10	340-132	1	Fitting-Elbow, 90 DEG
10:1	237-78	1	O-Ring
10:2	237-21	1	O-Ring

Ref.	Part Number	Qty.	Description
11	340-101	1	Fitting-HYD, 45 DEG
11:1	237-30	1	O-Ring
11:2	237-79	1	O-Ring
12	120-2072	2	HYD Motor ASM
13	69-8980	2	Washer
14	95-2908	2	Hose-HYD
15	106-9674	1	Hose-HYD
16	95-2909	1	Hose-HYD
17	340-70	1	Nut-Lock
18	105-5404	1	Hose-HYD
19	340-92	1	Fitting-Straight
19:1	237-78	1	O-Ring
19:2	237-21	1	O-Ring
21	105-5405	1	Hose-HYD
22	340-68	1	Fitting-Tee, Bulkhead
22:1	237-22	3	O-Ring

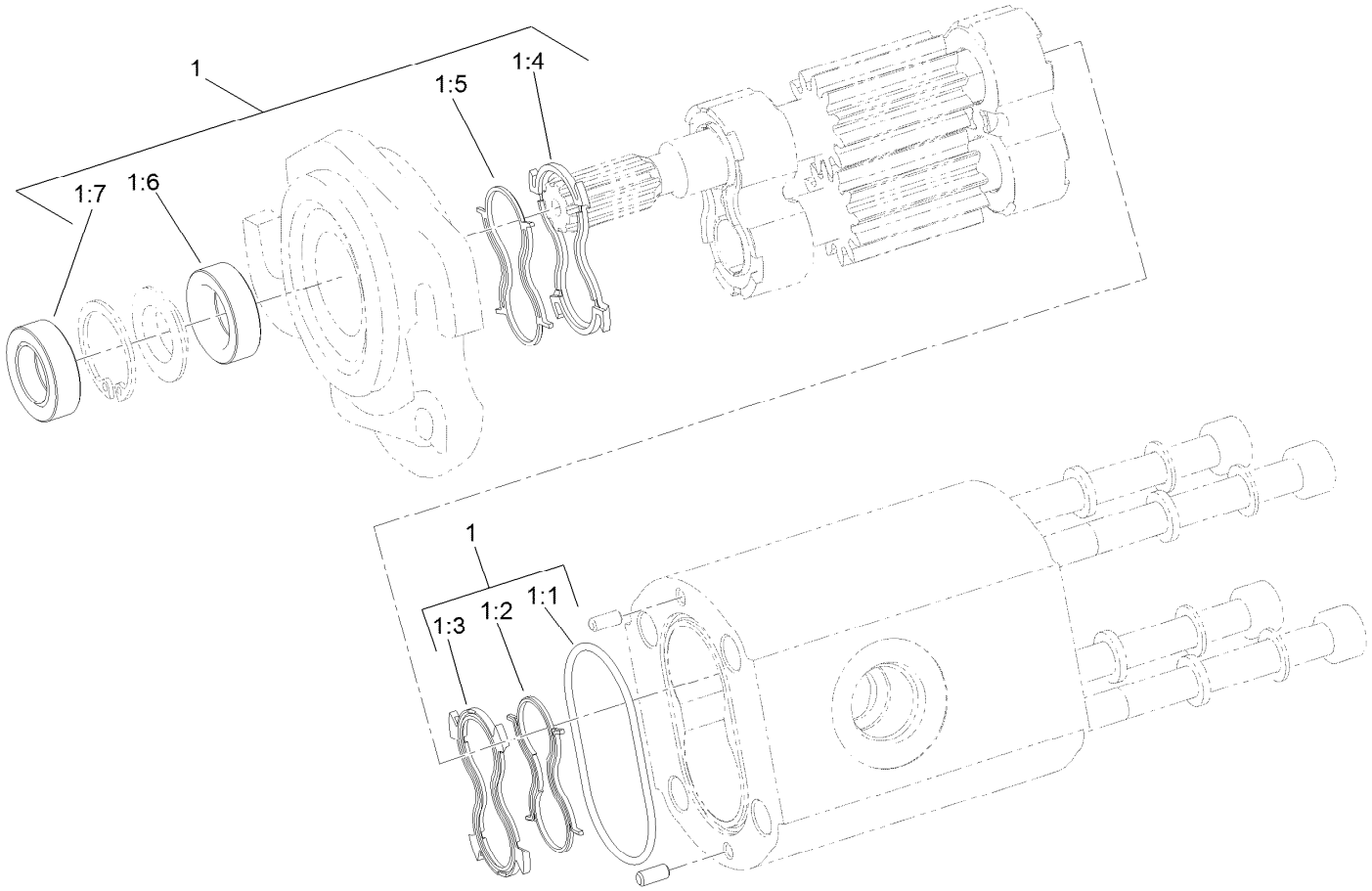

Hydraulic Reel Motor Assembly No. 120-2072

Ref.	*Part Number*	*Qty.*	*Description*
1	119-7113	1	Seal Kit
1:1		1	O-Ring Housing ●
1:2		1	Seal-Anti Extrusion ●
1:3		1	Seal-Plate, Balancing ●
1:4		1	Seal-Plate, Balancing ●
1:5		1	Seal-Anti Extrusion ●
1:6		1	Seal-Shaft (Inboard) ●
1:7		1	Seal-Shaft (Outboard) ●

● Not serviced separately

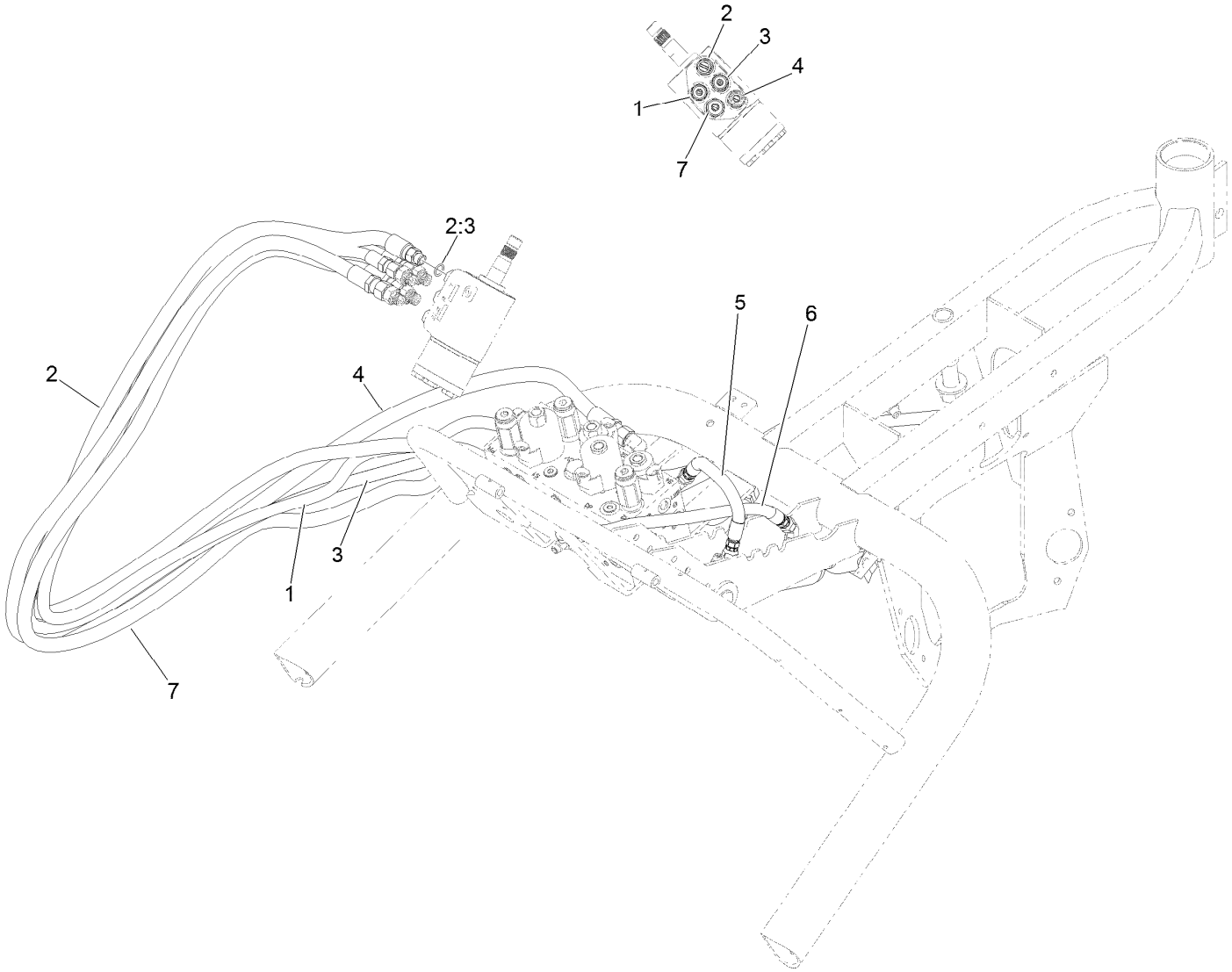

Hydraulic Steering Hose and Center Lift Cylinder Hose Assembly

Ref.	*Part Number*	*Qty.*	*Description*
1	100-4892	1	Hose-HYD
2	131-2043	1	Hose-HYD
2:3	237-42	1	O-Ring
3	105-4337	1	Hose-HYD
4	105-4339	1	Hose-HYD
5	131-2040	1	Hose-HYD
6	130-6545	1	Hose-HYD
7	131-2044	1	Hose-HYD

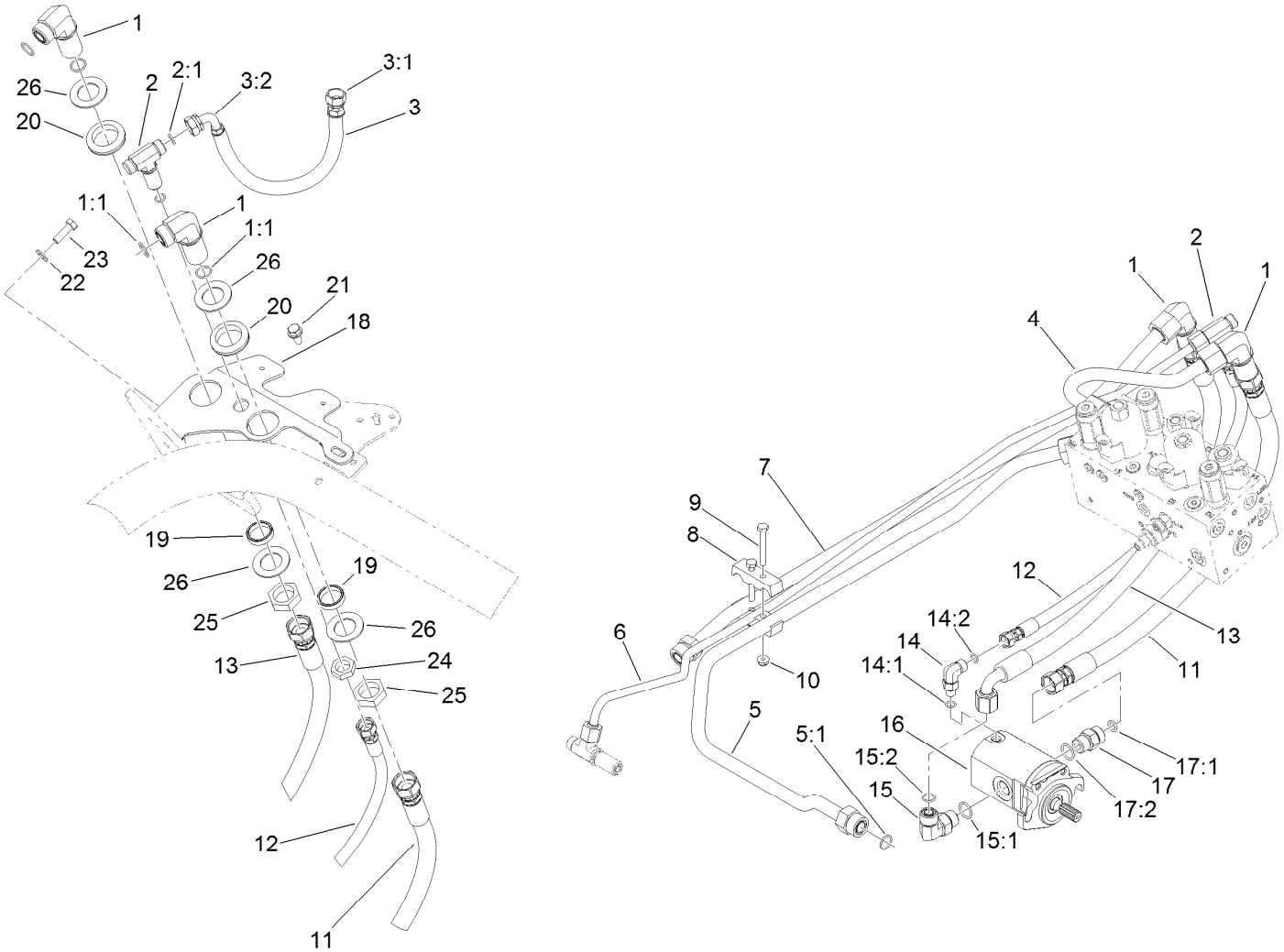

Rear Hydraulic Reel Drive and Hose Assembly

Ref.	Part Number	Qty.	Description
1	340-72	2	Fitting-Bulkhead, 90 DEG
1:1	237-65	2	O-Ring
2	105-8281	1	Tee-Bulkhead
2:1	237-22	3	O-Ring
3	105-5409	1	Hose ASM
3:1	105-8311	1	Fitting-HYD
3:2	105-8312	1	Fitting-HYD, 90 DEG
4	105-5482	1	Tube-HYD
5	107-2582	1	Tube-HYD
5:1	237-65	1	O-Ring
6	132-9530	1	Tube-HYD
7	105-5493	1	Tube-HYD
8	93-2509	2	Clamp-Tube
9	321-11	2	Screw-HH
10	104-7201	2	Nut-HF, NI
11	105-5400	1	Hose-HYD
12	105-5402	1	Hose-HYD
13	105-5401	1	Hose-HYD
14	340-132	1	Fitting-Elbow, 90 DEG

Ref.	Part Number	Qty.	Description
14:1	237-78	1	O-Ring
14:2	237-21	1	O-Ring
15	340-98	1	Fitting-Elbow, 90 DEG
15:1	237-79	1	O-Ring
15:2	237-30	1	O-Ring
16	120-2072	1	HYD Motor ASM
17	340-4	1	Fitting-Straight
17:1	237-30	1	O-Ring
17:2	237-79	1	O-Ring
18	105-8253-01	1	Bracket-Bulkhead
19	125-1984	2	Spacer
20	240-3	2	Grommet-Rubber
21	32104-32	1	Screw-HWH
22	3256-23	1	Washer-Plain
23	322-5	1	Screw-HH
24	340-70	1	Nut-Lock
25	340-74	2	Nut-Lock, Bulkhead
26	69-9010	4	Washer

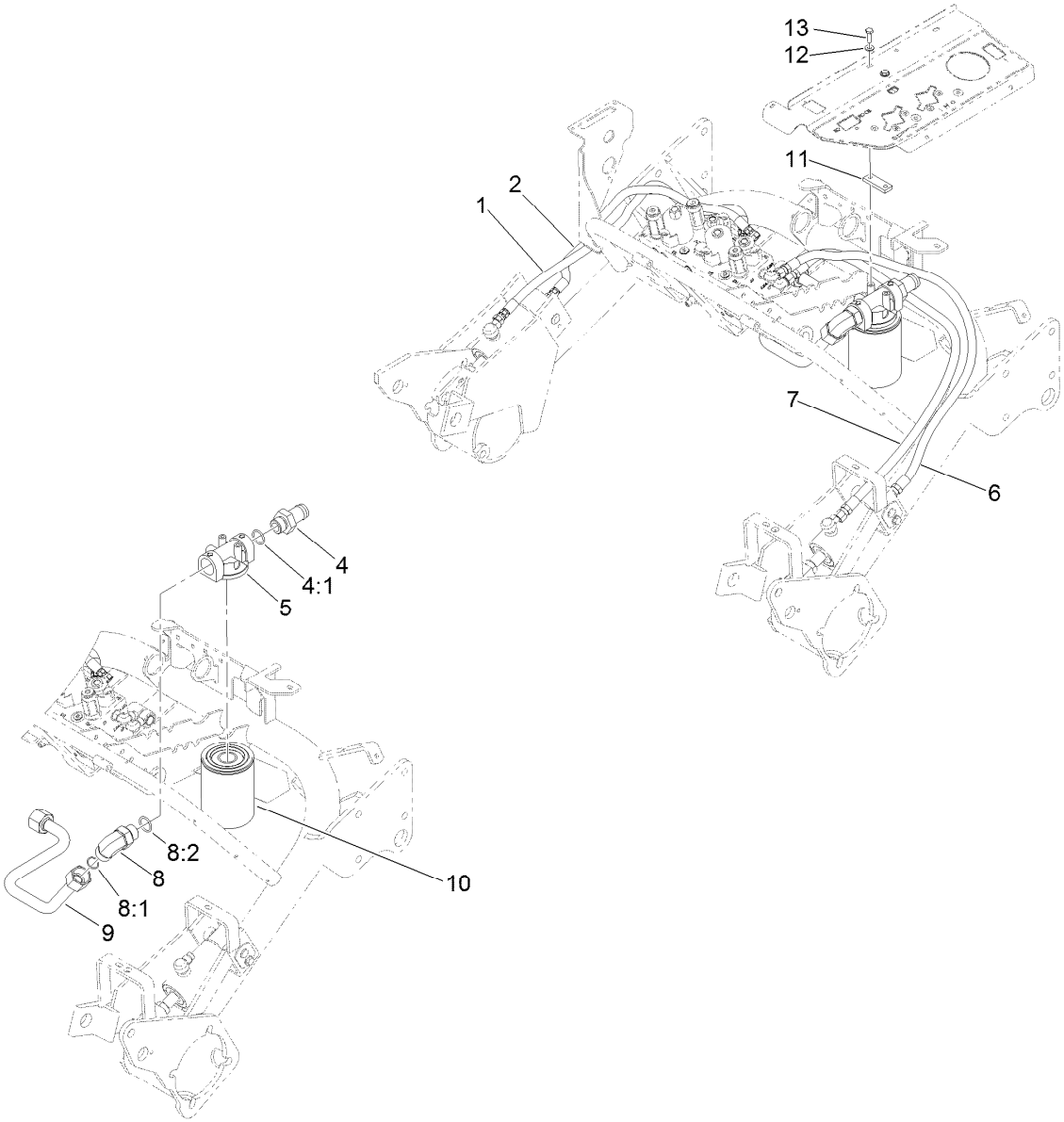

Front Lift Cylinders Hose and Filter Assembly

Ref.	Part Number	Qty.	Description
1	108-6506	1	Hose-HYD
2	108-6505	1	Hose-HYD
4	99-3017	1	Fitting
4:1	237-81	1	O-Ring
5	92-5821	1	Head-Filter
6	130-6547	1	Hose-HYD
7	130-6546	1	Hose-HYD
8	340-142	1	Fitting-Elbow, 90 DEG
8:1	237-58	1	O-Ring
8:2	237-81	1	O-Ring
9	105-5460	1	Tube-HYD
10	107-9531	1	Filter-Oil, HYD
11	105-4309	1	Plate-Filter
12	3256-22	2	Washer-Flat
13	321-5	2	Screw-HH

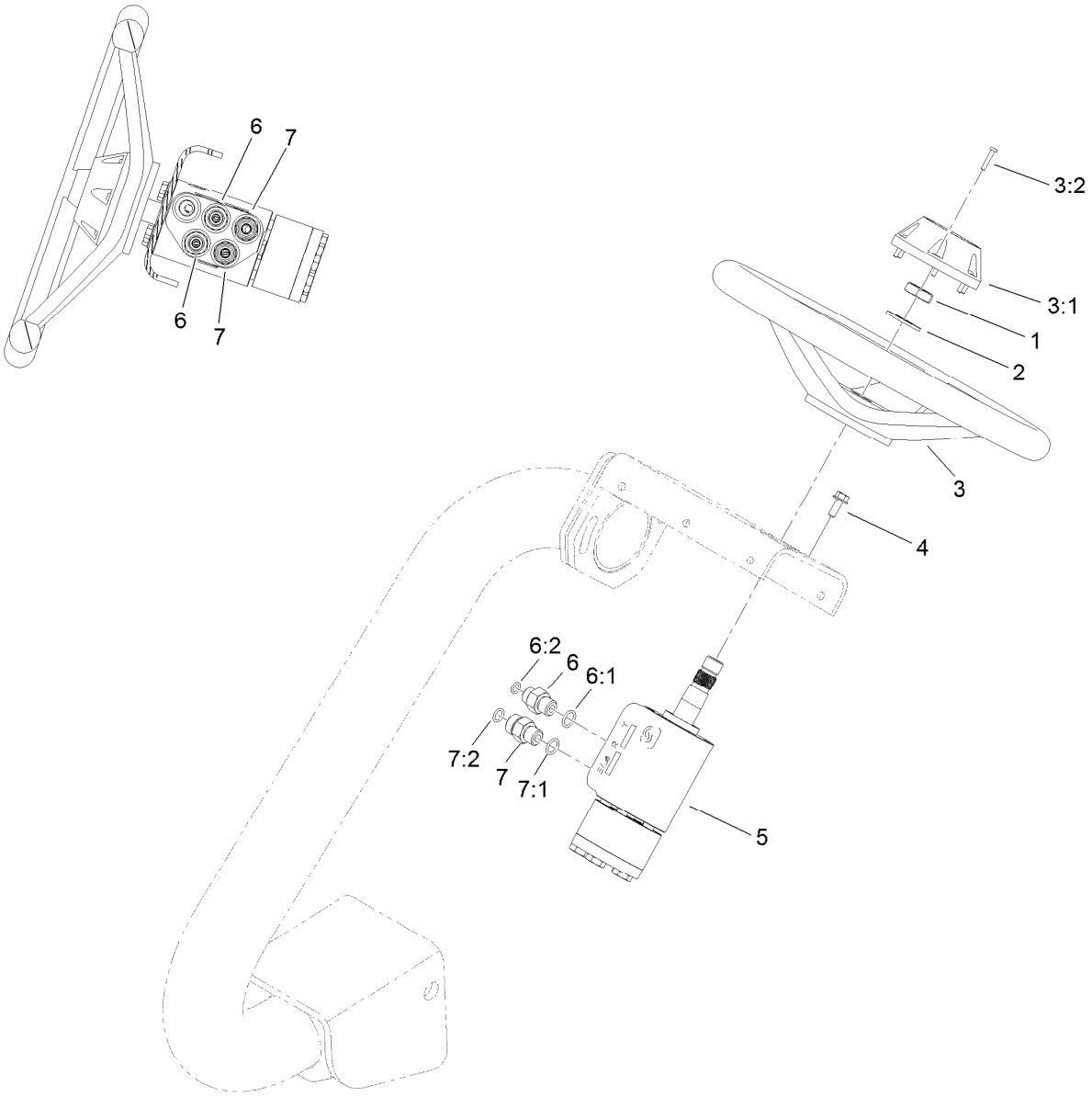

Steering Wheel and Valve Assembly

Ref.	*Part Number*	*Qty.*	*Description*
1	3296-33	1	Nut-Lock, NI
2	3256-27	1	Washer-Flat
3	75-0560	1	Steering Wheel ASM
3:1	32144-21	1	Screw
3:2	68-5140	1	Cap-Wheel, Steering
4	33103-016	4	Screw-HHF
5	114-4672	1	Steering Valve ASM
6	340-1	2	Fitting-Straight
6:1	237-21	1	O-Ring
6:2	237-42	1	O-Ring
7	340-2	2	Fitting-Straight
7:1	237-22	1	O-Ring
7:2	237-42	1	O-Ring

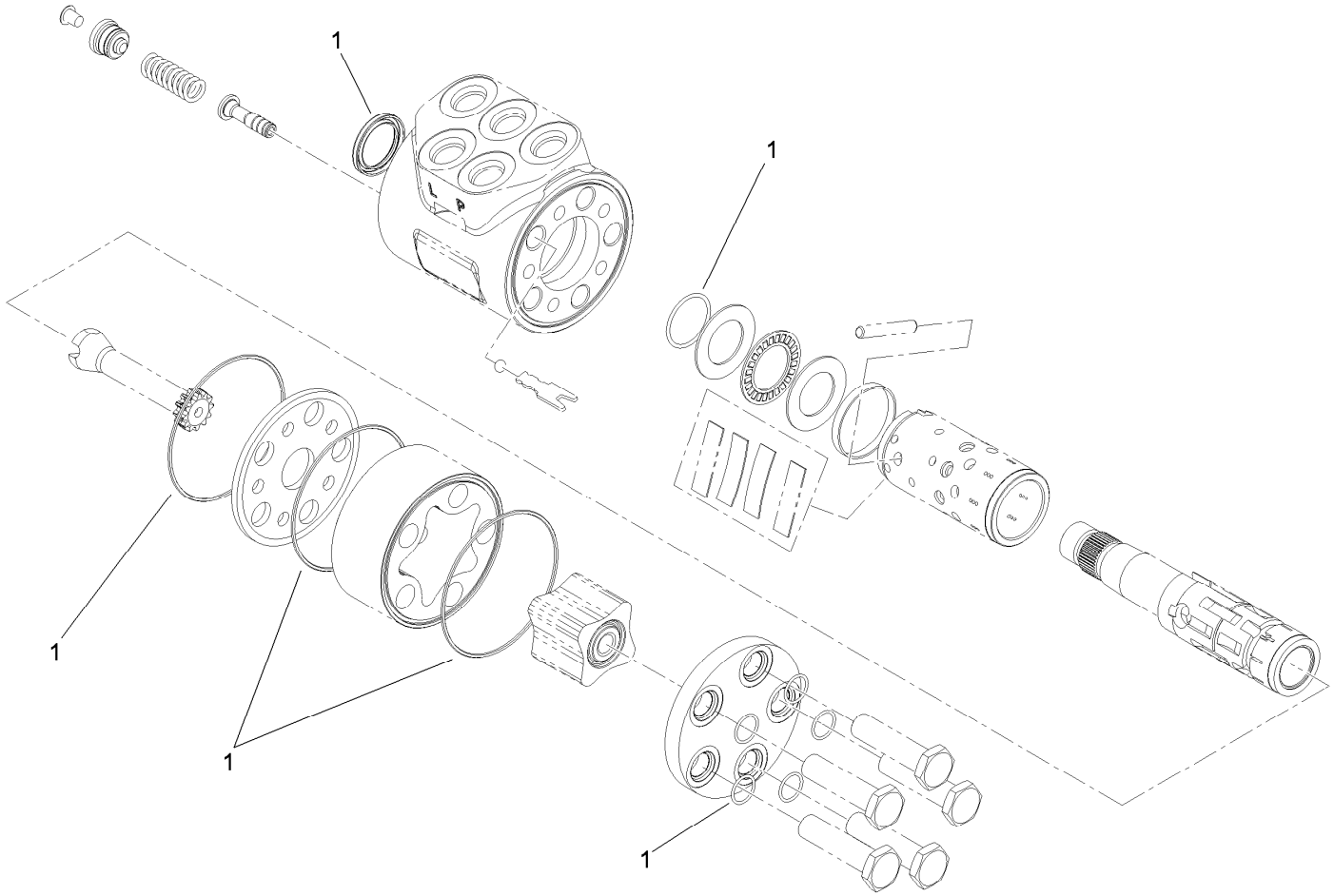

Steering Valve Assembly No. 114-4672

Ref.	*Part Number*	*Qty.*	*Description*
1	106-6716	1	Seal Kit

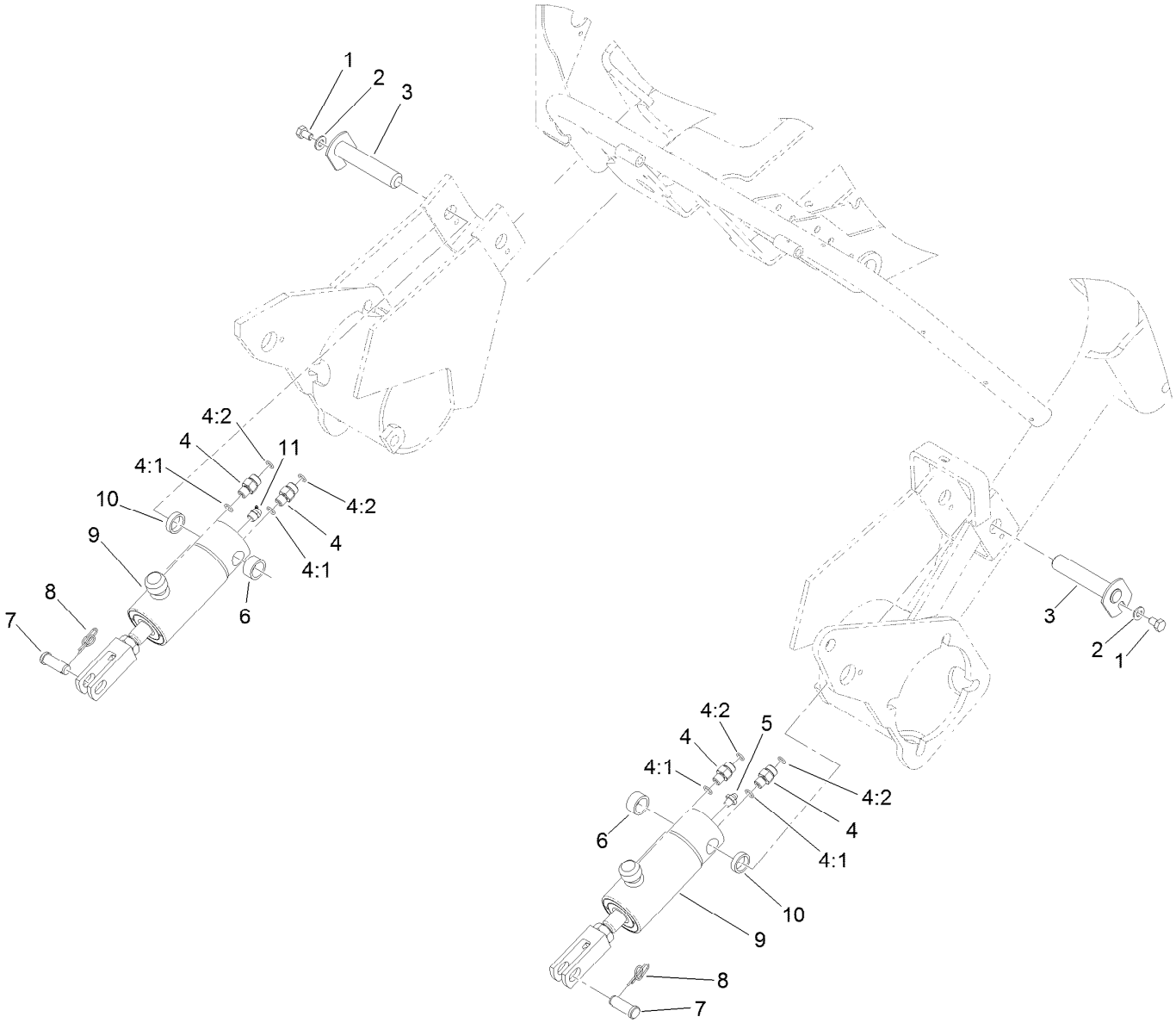

Right Hand and Left Hand Lift Cylinder Assembly

Ref.	*Part Number*	*Qty.*	*Description*
1	322-1	2	Screw-HH
2	3256-23	2	Washer-Plain
3	120-3199	2	Pin-Pivot
4	340-92	4	Fitting-Straight
4:1	237-78	1	O-Ring
4:2	237-21	1	O-Ring
5	302-2	1	Fitting-Grease
6	74-3730	2	Spacer-Spindle, Rear
7	283-8	2	Pin-Clevis
8	112-1491	2	Pin-Cotter
9	131-2787	2	HYD Cylinder ASM
10	105-3828	2	Spacer
11	302-10	1	Fitting-Grease

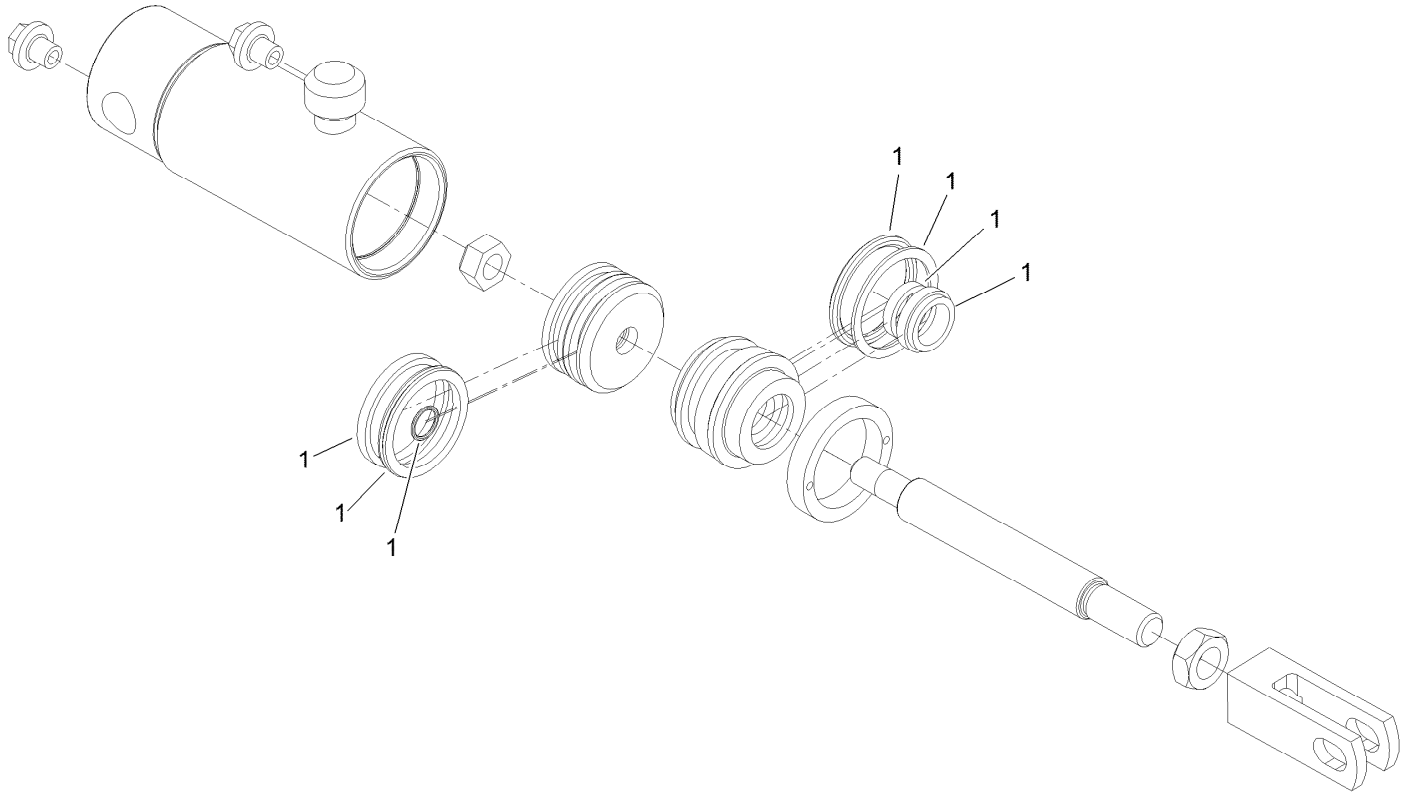

Hydraulic Cylinder Assembly No. 131-2787

Ref.	*Part Number*	*Qty.*	*Description*
1	132-9515	1	Seal Kit

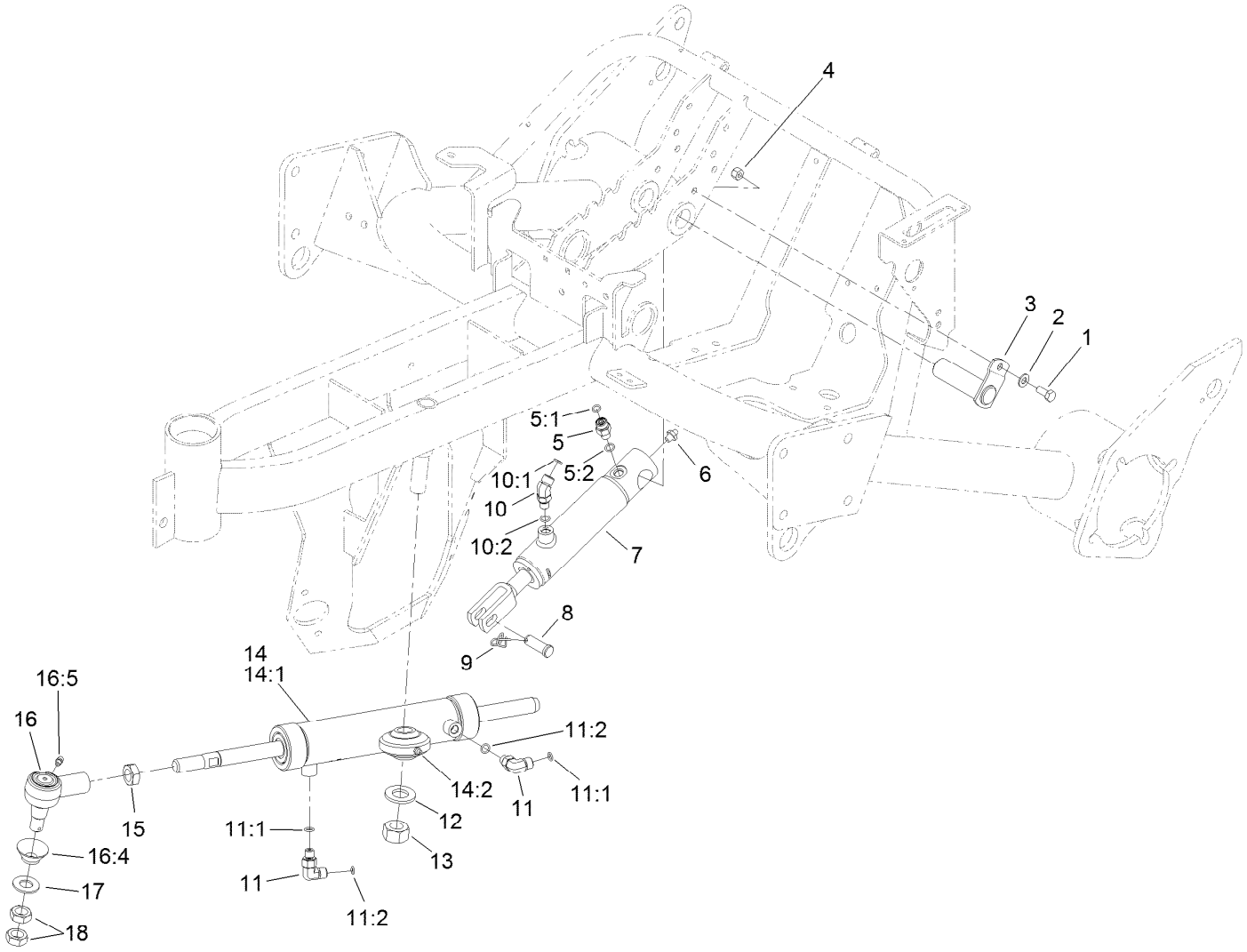

Steering Cylinder and Center Lift Cylinder Assembly

Ref.	Part Number	Qty.	Description
1	322-3	1	Screw-HH
2	3256-23	1	Washer-Plain
3	68-5560	1	Pin-Cylinder, Pivot
4	3296-29	1	Nut-Lock, NI
5	340-92	1	Fitting-Straight
5:1	237-78	1	O-Ring
5:2	237-21	1	O-Ring
6	302-2	1	Fitting-Grease
7	131-2786	1	HYD Cylinder ASM
8	283-8	1	Pin-Clevis
9	112-1491	1	Pin-Cotter
10	340-103	1	Fitting-HYD, 45 DEG
10:1	237-78	1	O-Ring
10:2	237-21	1	O-Ring

Ref.	Part Number	Qty.	Description
11	340-132	2	Fitting-Elbow, 90 DEG
11:1	237-78	1	O-Ring
11:2	237-21	1	O-Ring
12	3256-28	1	Washer-Flat
13	3217-12	1	Nut-Hex
14	132-3777	1	Steering Cylinder ASM
14:1	132-6964	1	Seal Kit
14:2	302-5	1	Fitting-Grease
15	84-5300	1	Nut-Jam
16	107-2553	1	Rod End ASM
16:4	106-6896	1	Seal
16:5	302-5	1	Fitting-Grease
17	3256-27	1	Washer-Flat
18	3220-6	2	Nut-Jam

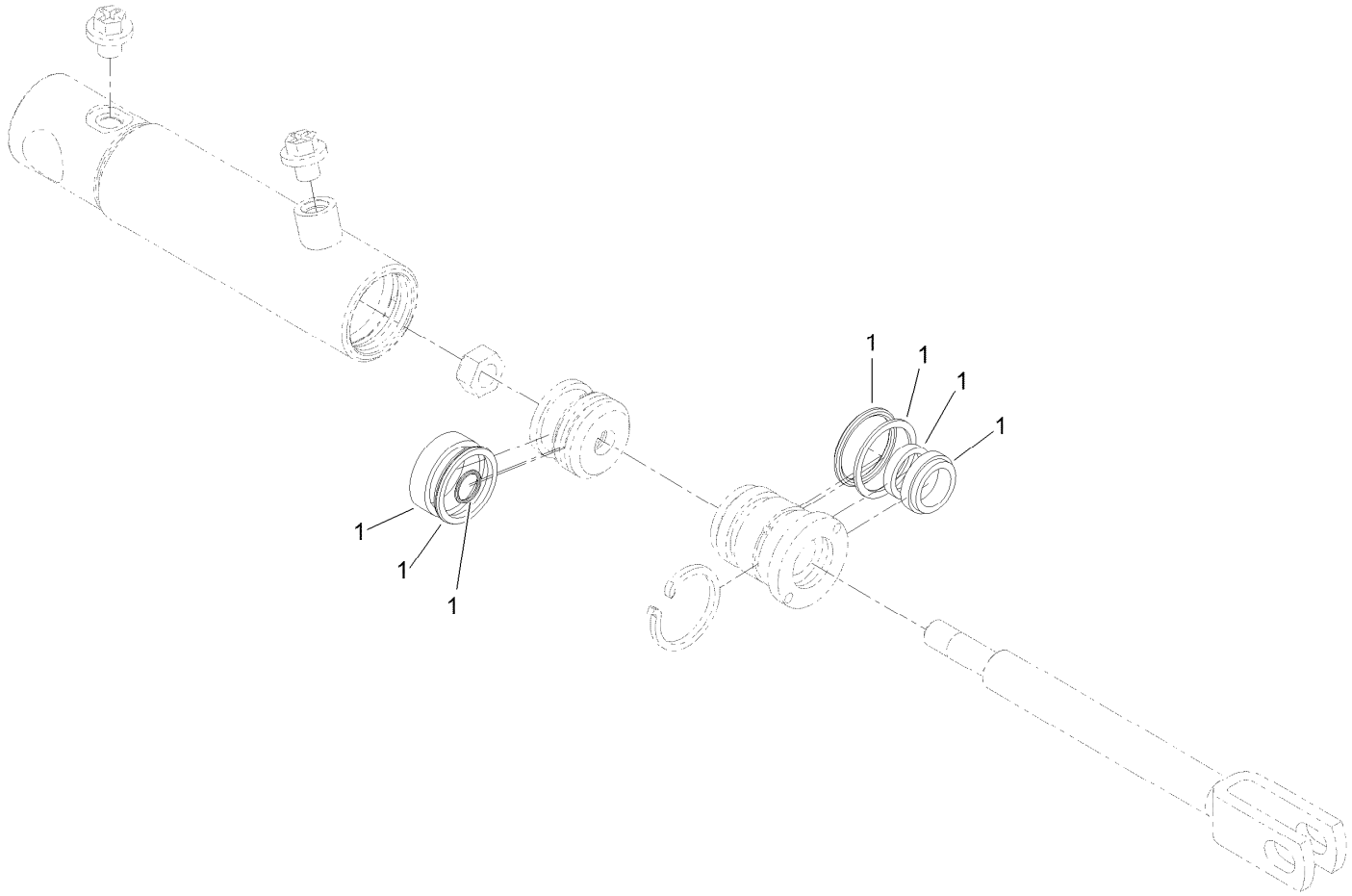

Hydraulic Cylinder Assembly No. 131-2786

Ref.	*Part Number*	*Qty.*	*Description*
1	132-9516	1	Seal Kit

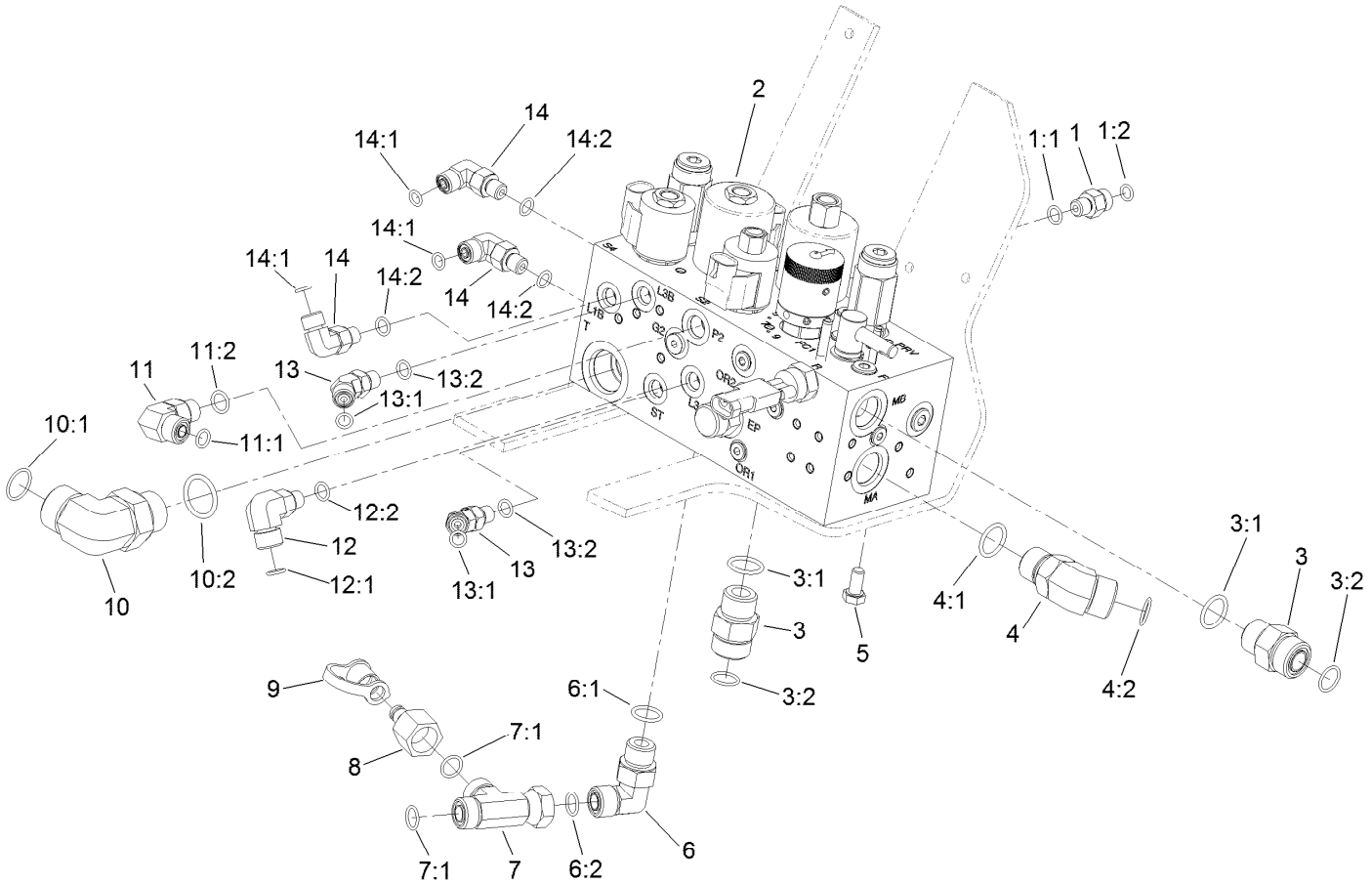

Hydraulic Manifold Assembly

Ref.	Part Number	Qty.	Description
1	340-92	1	Fitting-Straight
1:1	237-78	1	O-Ring
1:2	237-21	1	O-Ring
2	112-0289	1	Manifold ASM (With Backlap)
3	340-7	2	Fitting-Straight
3:1	237-65	1	O-Ring
3:2	237-80	1	O-Ring
4	340-14	1	Fitting-HYD, 45 DEG
4:1	237-65	1	O-Ring
4:2	237-80	1	O-Ring
5	33114-016	2	Screw-HH
6	340-98	1	Fitting-Elbow, 90 DEG
6:1	237-79	1	O-Ring
6:2	237-30	1	O-Ring
7	340-104	1	Fitting-Tee
7:1	237-30	2	O-Ring

Ref.	Part Number	Qty.	Description
8	100-5616	1	Fitting
9	354-79	1	Cap-Dust
10	340-142	1	Fitting-Elbow, 90 DEG
10:1	237-58	1	O-Ring
10:2	237-81	1	O-Ring
11	340-77	1	Fitting-Elbow, 90 DEG
11:1	237-22	1	O-Ring
11:2	237-42	1	O-Ring
12	340-97	1	Fitting-Elbow, 90 DEG
12:1	237-22	1	O-Ring
12:2	237-78	1	O-Ring
13	340-103	2	Fitting-HYD, 45 DEG
13:1	237-78	1	O-Ring
13:2	237-21	1	O-Ring
14	340-132	3	Fitting-Elbow, 90 DEG
14:1	237-78	1	O-Ring
14:2	237-21	1	O-Ring

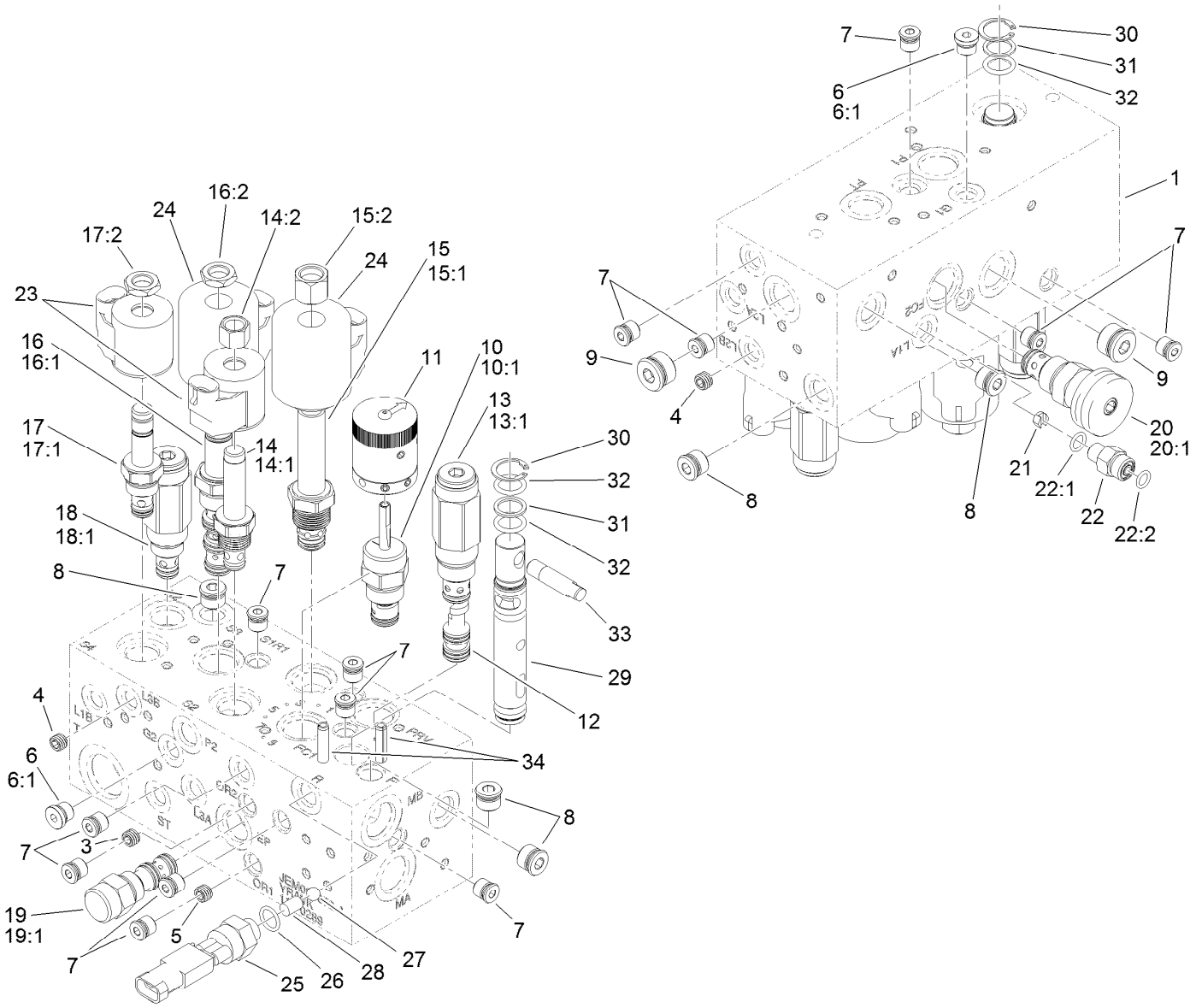

Hydraulic Manifold Assembly No. 112-0289

Ref.	Part Number	Qty.	Description
1		1	Body-Manifold ●
3	112-9202	1	Orifice-Flow, Control (.060)
4	110-8887	2	Plug-Orifice (0.055)
5	112-9203	1	Orifice-Control, Flow (.013)
6	353-990	2	Plug ASM
6:1	237-78	1	O-Ring
7	106-1025	13	Plug-HYD
8	106-1026	5	Plug-HYD
9	106-1027	2	Plug
10	110-8769	1	Valve-Control, Manual Flow
10:1	110-2633	1	Seal Kit
11	110-8767	1	Rotary Handle ASM
12	119-3506	1	Piston-Pilot
13	112-9205	1	Valve-Relief
13:1	105-9159	1	Seal Kit
14	107-7517	1	Valve-Solenoid
14:1	105-9156	1	Seal Kit
14:2	107-7812	1	Nut-Solenoid

Ref.	Part Number	Qty.	Description
15	119-4137	1	Valve-Relief, Solenoid
15:1	110-6316	1	Seal Kit
15:2	130-8180	1	Nut-Coil (9/16-24 Unef-2B)
16	110-8906	1	Valve-Solenoid
16:1	110-8908	1	Spool Valve Seal Kit
16:2	110-2634	1	Nut-Coil
17	112-9206	1	Solenoid Valve ASM
17:1	105-9156	1	Seal Kit
17:2	110-2634	1	Nut-Coil
18	133-8873	1	Valve-Relief
18:1	105-9156	1	Seal Kit
19	110-8988	1	Element-Logic
19:1	110-8773	1	Seal Kit
20	119-4136	1	Control-Flow
20:1	110-2633	1	Seal Kit
21	114-4682	1	Orifice-Flow Control (.030)
22	340-92	1	Fitting-Straight
22:1	237-78	1	O-Ring

● Not serviced separately

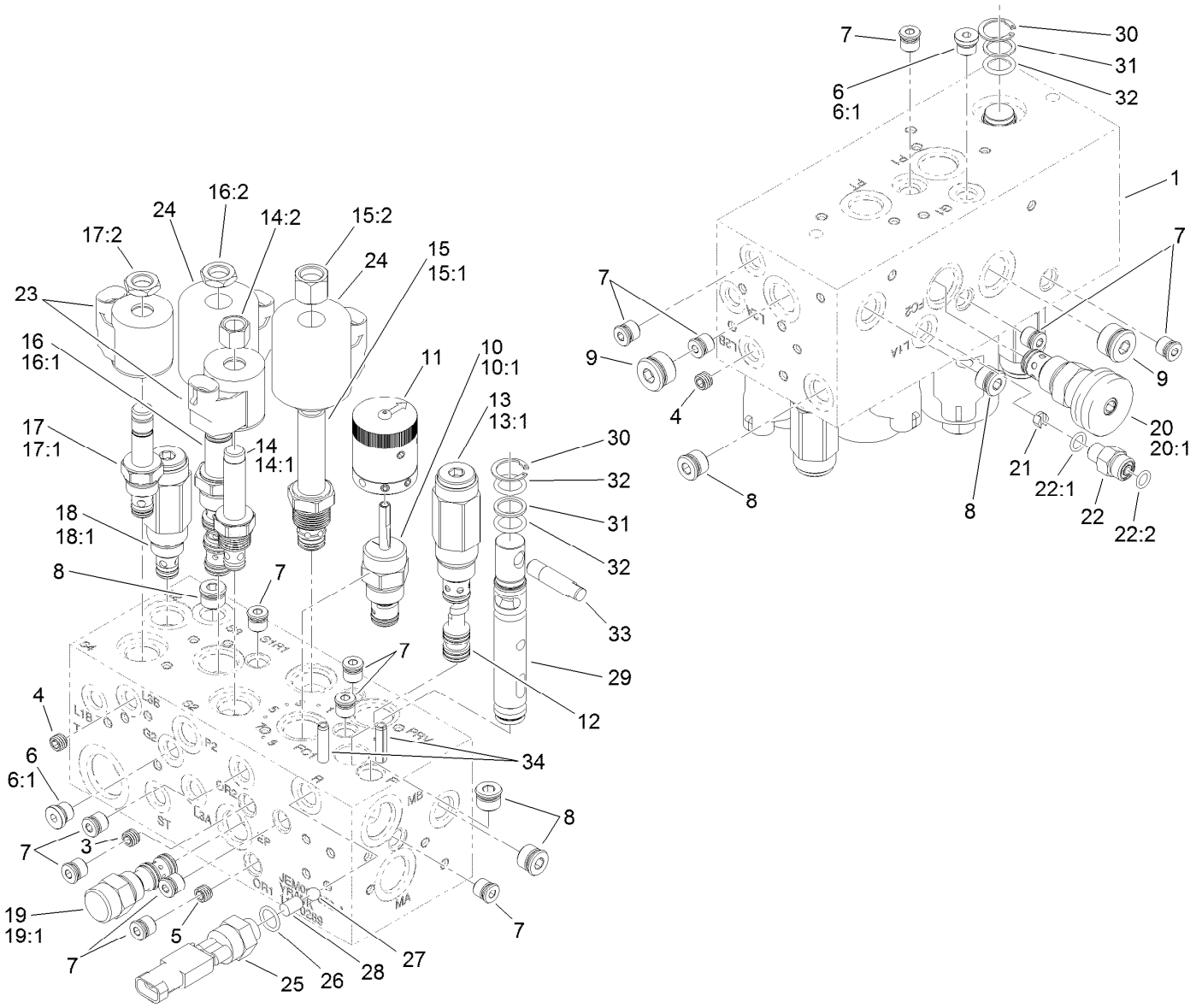

Hydraulic Manifold Assembly No. 112-0289 (continued)

Ref.	Part Number	Qty.	Description
22:2	237-21	1	O-Ring
23	105-9333	2	Coil-12Vdc
24	110-2630	2	Coil-12Vdc
25	72-4320	1	Switch-Ball
26	110-8757	1	O-Ring
27	110-8762	1	Ball-Chrome
28	112-6533	1	Pin-Dowel

Ref.	Part Number	Qty.	Description
29	112-6536	1	Spool
30	112-6532	2	Ring-Retaining
31	112-6534	2	Ring-Back Up
32	117-4606	3	O-Ring
33	110-8758	1	Handle-Spool
34	112-6531	2	Pin-Spring

● Not serviced separately

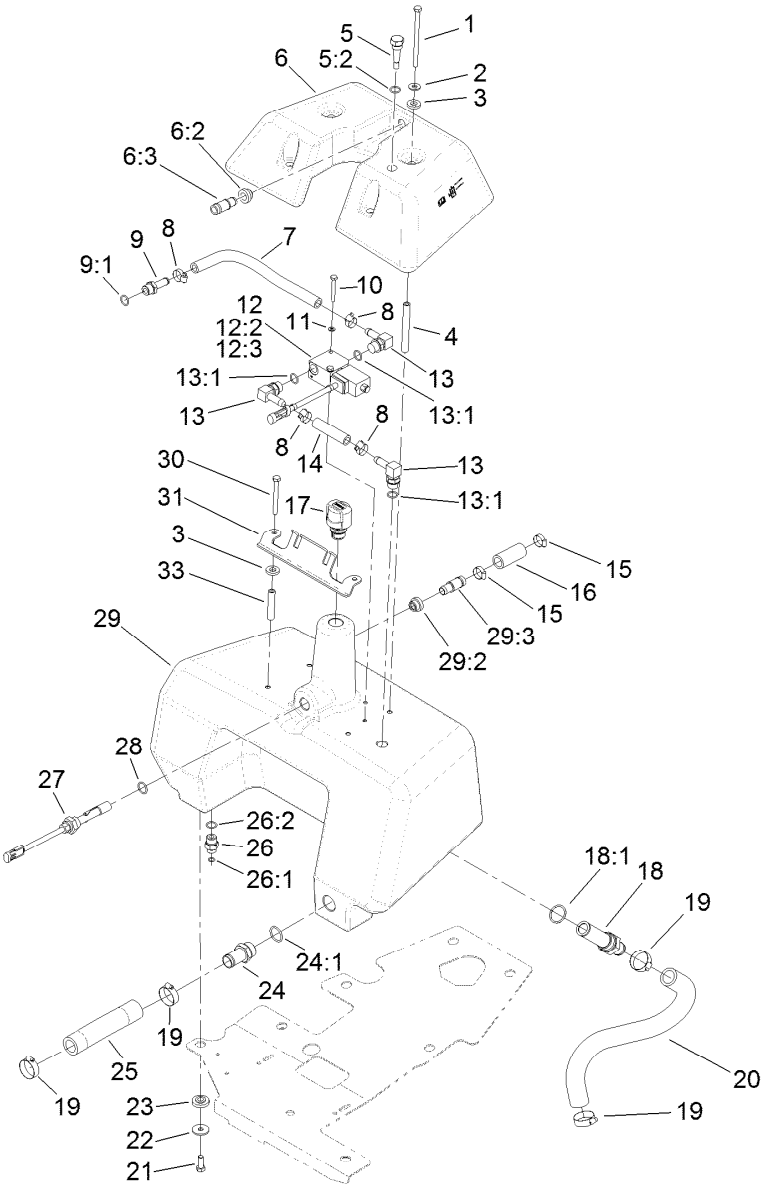

Hydraulic Reservoir and Leak Detector Assembly

Ref.	Part Number	Qty.	Description
1	322-29	2	Screw-HH
2	3256-71	2	Washer-Flat
3	83-1470	4	Washer-Neoprene
4	83-1560	2	Spacer-Tube, Long
5	133-2334	1	Dipstick ASM
5:2	237-79	1	O-Ring
6	136-8528	1	Tank-Detector, Leak
6:2	136-8231	1	Washer-Pulley
6:3	136-8532	1	Spout
7	83-2070	1	Hose-Valve
8	2412-36	4	Clamp-Hose
9	354-121	1	Fitting-STR
9:1	237-79	1	O-Ring
10	321-11	2	Screw-HH
11	3253-3	2	Washer-Lock
12	83-1460	1	Solenoid Valve ASM
12:2	83-2000	1	Spool-Valve
12:3	83-2010	1	Coil ASM
13	354-120	3	Fitting-Elbow, 90
13:1	237-79	1	O-Ring
14	83-2080	1	Hose-Valve, Tank

Ref.	Part Number	Qty.	Description
15	2412-141	2	Clamp-Drive, Worm
16	110-3998	1	Hose-Overflow
17	115-9793	1	Breather
18	112-0211	1	Strainer Fitting ASM
18:1	237-146	1	O-Ring
19	2412-34	4	Clamp-Hose
20	105-8285	1	Hose-Inlet, Pump
21	323-6	3	Screw-HH
22	63-8410	3	Washer
23	240-11	3	Bushing-Flange
24	83-0870	1	Fitting-Hose, Barbed
24:1	237-177	1	O-Ring
25	105-5410	1	Hose-HYD
26	340-3	1	Fitting-Straight
26:1	237-22	1	O-Ring
26:2	237-79	1	O-Ring
27	83-1450	1	Sensor-Level, Oil
28	237-80	1	O-Ring
29	136-8526	1	Hydraulic Tank ASM
29:2	136-8531	1	Grommet
29:3	136-8532	1	Spout

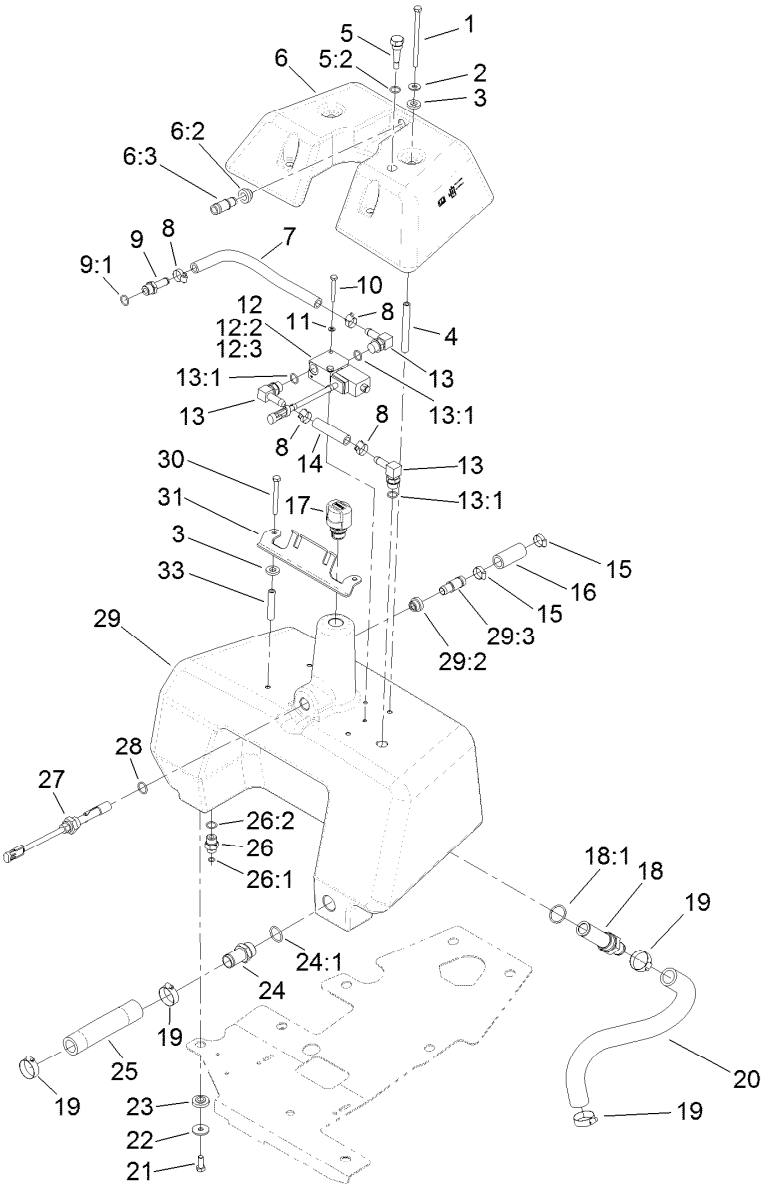

Hydraulic Reservoir and Leak Detector Assembly (continued)

Ref.	Part Number	Qty.	Description
30	322-14	2	Screw-HH
31	121-2564	1	Bracket
33	83-1550	2	Spacer-Tube, Short

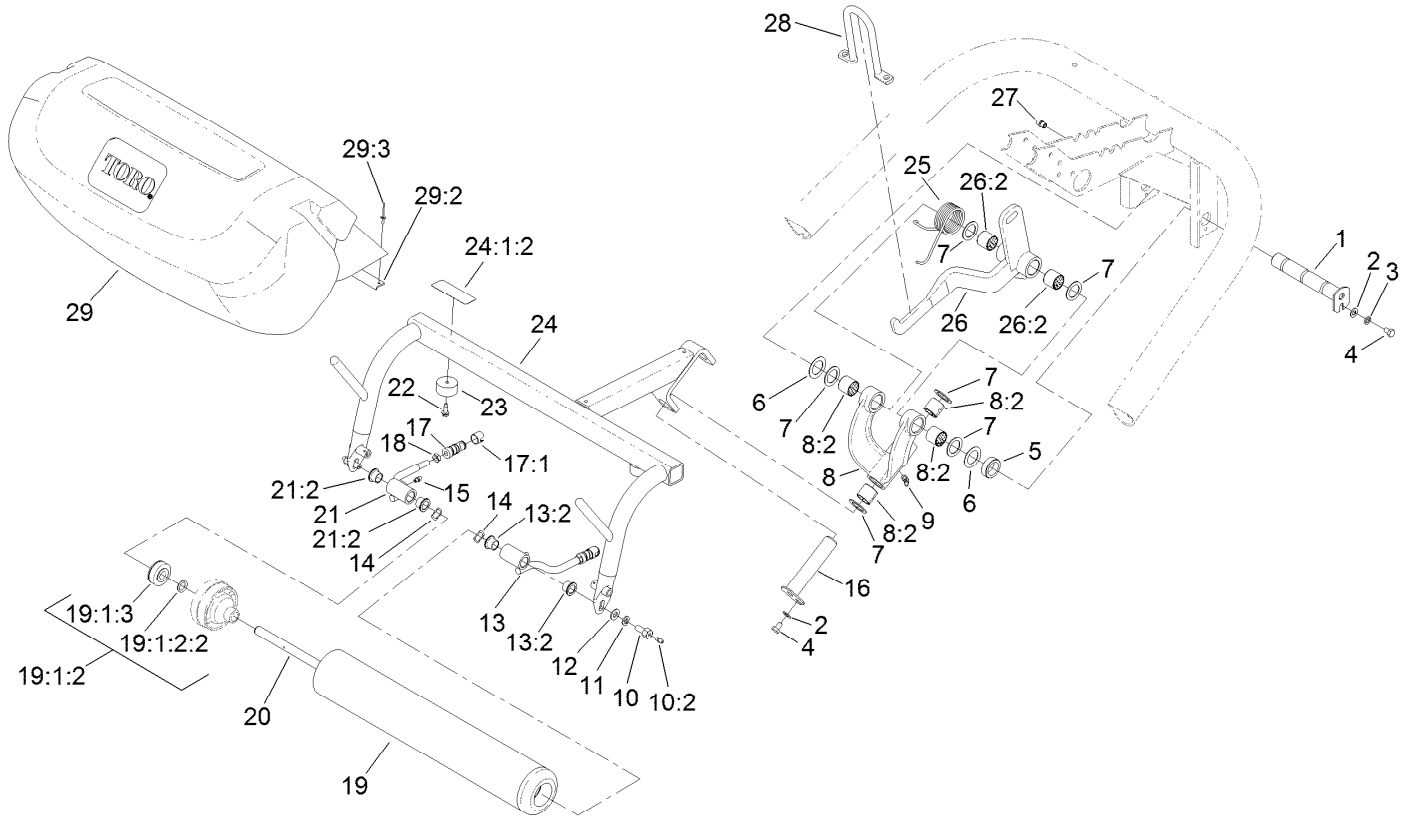

Center Pull Frame Assembly

Ref.	Part Number	Qty.	Description
1	114-4685	1	Pin-Hinge
2	3256-23	2	Washer-Plain
3	3253-4	1	Washer-Lock
4	322-1	2	Screw-HH
5	93-2384	1	Spacer-Carrier
6	5-1226	2	Washer
7	10-8110	6	Washer-Thrust
8	105-0452	1	Pivot Hinge ASM
8:2	125-5196	4	Bushing
9	302-60	1	Fitting-Grease
10	11-0160	2	Roller Shaft Screw ASM
10:2	302-5	1	Fitting-Grease
11	3253-21	2	Washer-Lock
12	3256-24	2	Washer-Flat
13	92-0586	1	Pull Arm ASM
13:2	125-5178	2	Bushing
14	3290-317	2	Washer-Spring
15	302-5	2	Fitting-Grease

Ref.	Part Number	Qty.	Description
16	10-6090	1	Pin-Pivot
17	99-1460	2	Ball Joint Receiver ASM
17:1	99-1461	1	Sleeve-Joint, Ball
18	3220-3	2	Nut-HJ
19	133-2337	1	Roller ASM
19:1:2		2	Hub Yoke ASM ●
19:1:2:2	253-83	1	Seal-Oil
19:1:3	133-2378	2	Bearing
20	21-8470	1	Shaft-Roller
21	92-0585	1	Pull Arm ASM
21:2	125-5178	2	Bushing
22	32104-95	2	Screw-HWH
23	94-4548	2	Bumper-Recessed
24	136-8485	1	Frame-Pull, Center
24:1:2	104-7729	1	Decal-Danger, CE
25	110-3953	1	Spring-Torsion, Center
26	110-3955	1	Center Lift Arm ASM
26:2	125-5196	2	Bushing

● Not serviced separately

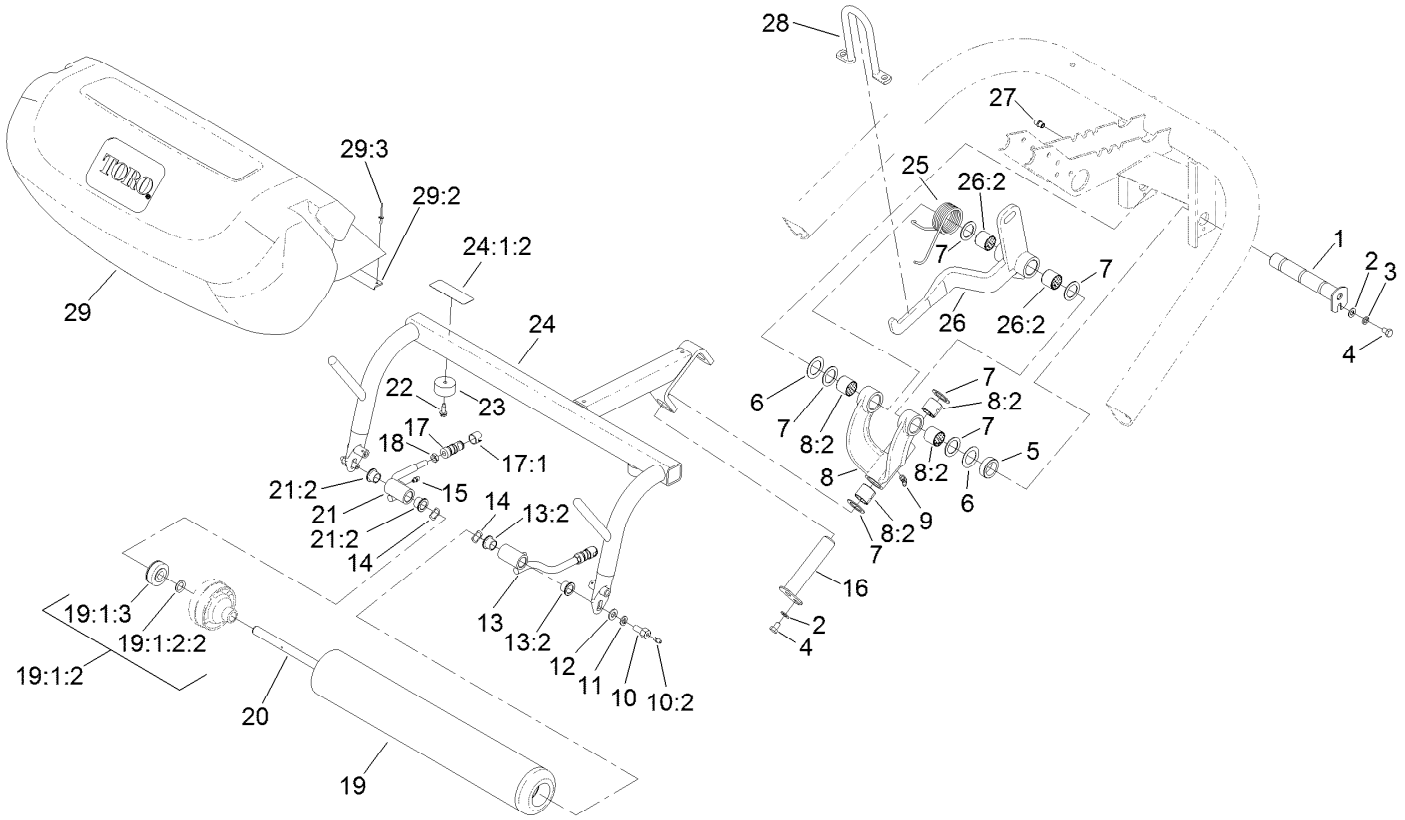

Center Pull Frame Assembly (continued)

Ref.	Part Number	Qty.	Description
27	302-33	1	Fitting-Grease
28	105-5740	1	Hook-Lift
29	108-8642	1	Grass Basket ASM

Ref.	Part Number	Qty.	Description
29:2	104-2607	1	Strip-Basket
29:3	3290-382	8	Rivet-Pop

● Not serviced separately

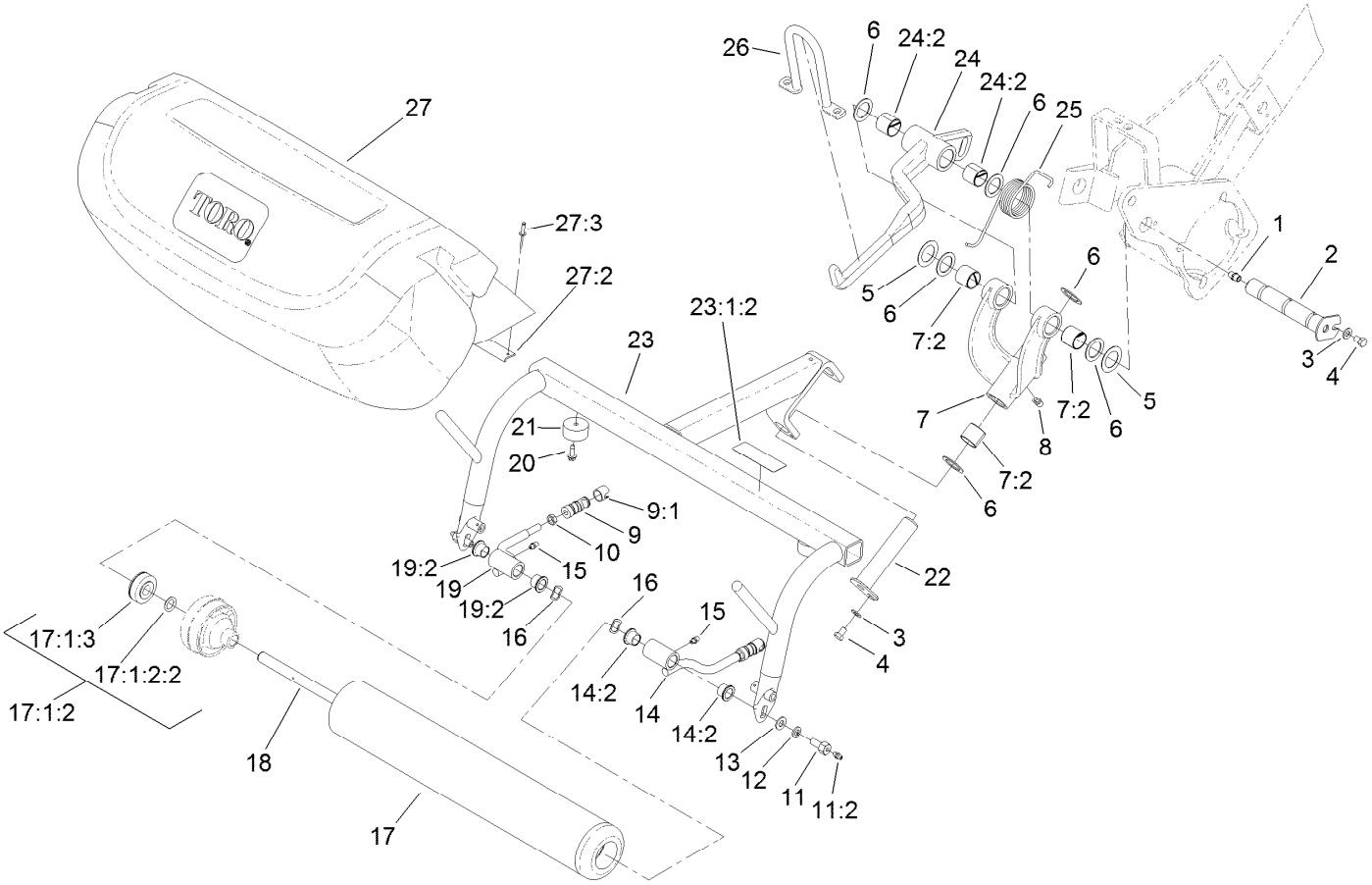

Left Pull Frame Assembly

Ref.	Part Number	Qty.	Description
1	302-33	1	Fitting-Grease
2	114-4683	1	Pin-Hinge
3	3256-23	2	Washer-Plain
4	322-1	2	Screw-HH
5	5-1226	2	Washer
6	10-8110	6	Washer-Thrust
7	10-7820	1	Pivot Hinge ASM
7:2	125-5196	4	Bushing
8	302-60	1	Fitting-Grease
9	99-1460	2	Ball Joint Receiver ASM
9:1	99-1461	1	Sleeve-Joint, Ball
10	3220-3	2	Nut-HJ
11	11-0160	2	Roller Shaft Screw ASM
11:2	302-5	1	Fitting-Grease
12	3253-21	2	Washer-Lock
13	3256-24	2	Washer-Flat
14	92-0586	1	Pull Arm ASM
14:2	125-5178	2	Bushing

Ref.	Part Number	Qty.	Description
15	302-5	2	Fitting-Grease
16	3290-317	2	Washer-Spring
17	133-2337	1	Roller ASM
17:1:2		2	Hub Yoke ASM ●
17:1:2:2	253-83	1	Seal-Oil
17:1:3	133-2378	2	Bearing
18	21-8470	1	Shaft-Roller
19	92-0585	1	Pull Arm ASM
19:2	125-5178	2	Bushing
20	32104-95	2	Screw-HWH
21	94-4548	2	Bumper-Recessed
22	10-6090	1	Pin-Pivot
23	136-8484	1	Frame-Pull, LH
23:1:2	104-7729	1	Decal-Danger, CE
24	107-2598	1	LH Lift Arm ASM
24:2	125-5196	2	Bushing
25	110-3952	1	Spring-Torsion, LH
26	105-5740	1	Hook-Lift

● Not serviced separately

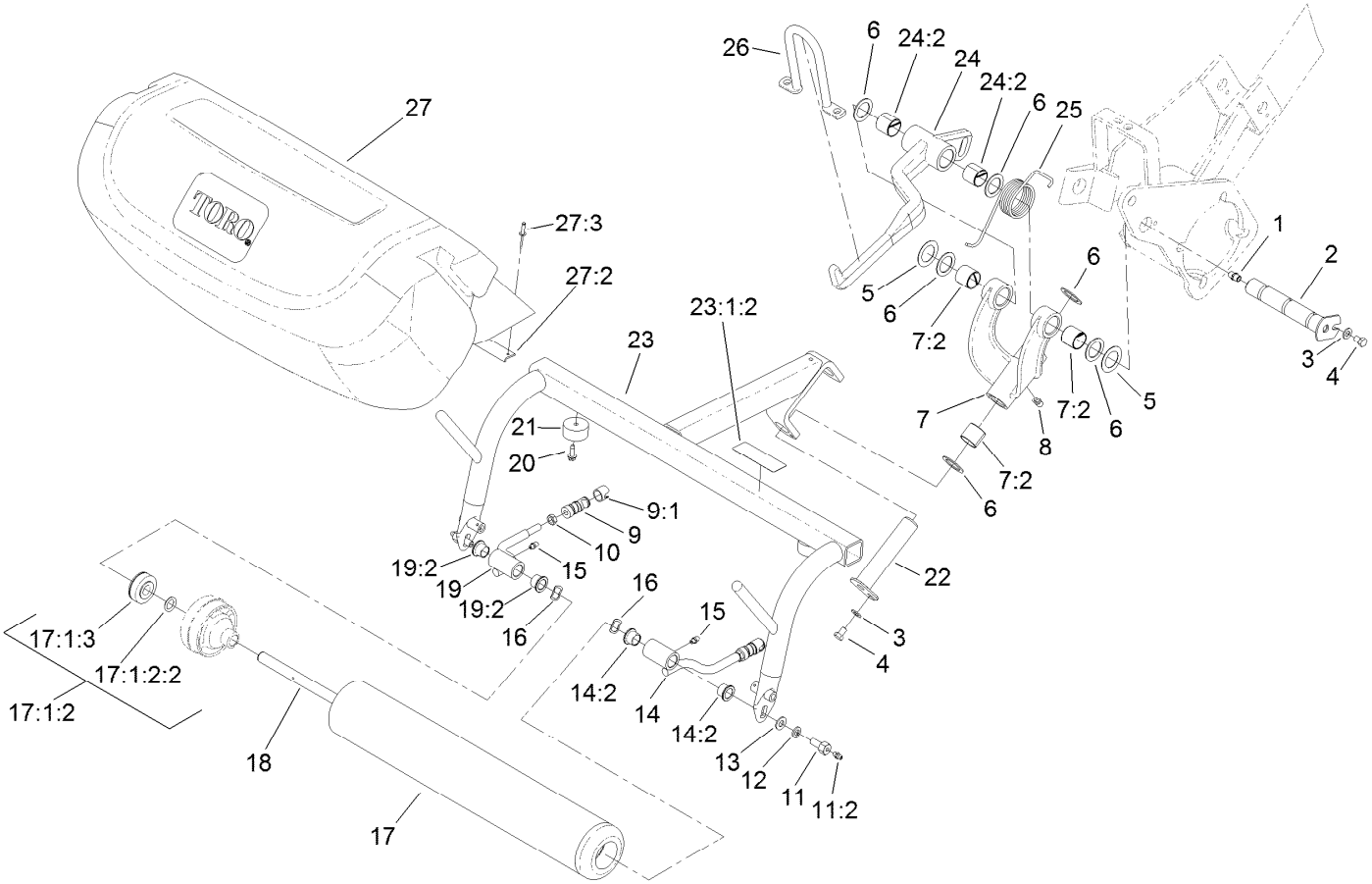

Left Pull Frame Assembly (continued)

Ref.	Part Number	Qty.	Description
27	108-8642	1	Grass Basket ASM

Ref.	Part Number	Qty.	Description
27:2	104-2607	1	Strip-Basket
27:3	3290-382	8	Rivet-Pop

● Not serviced separately

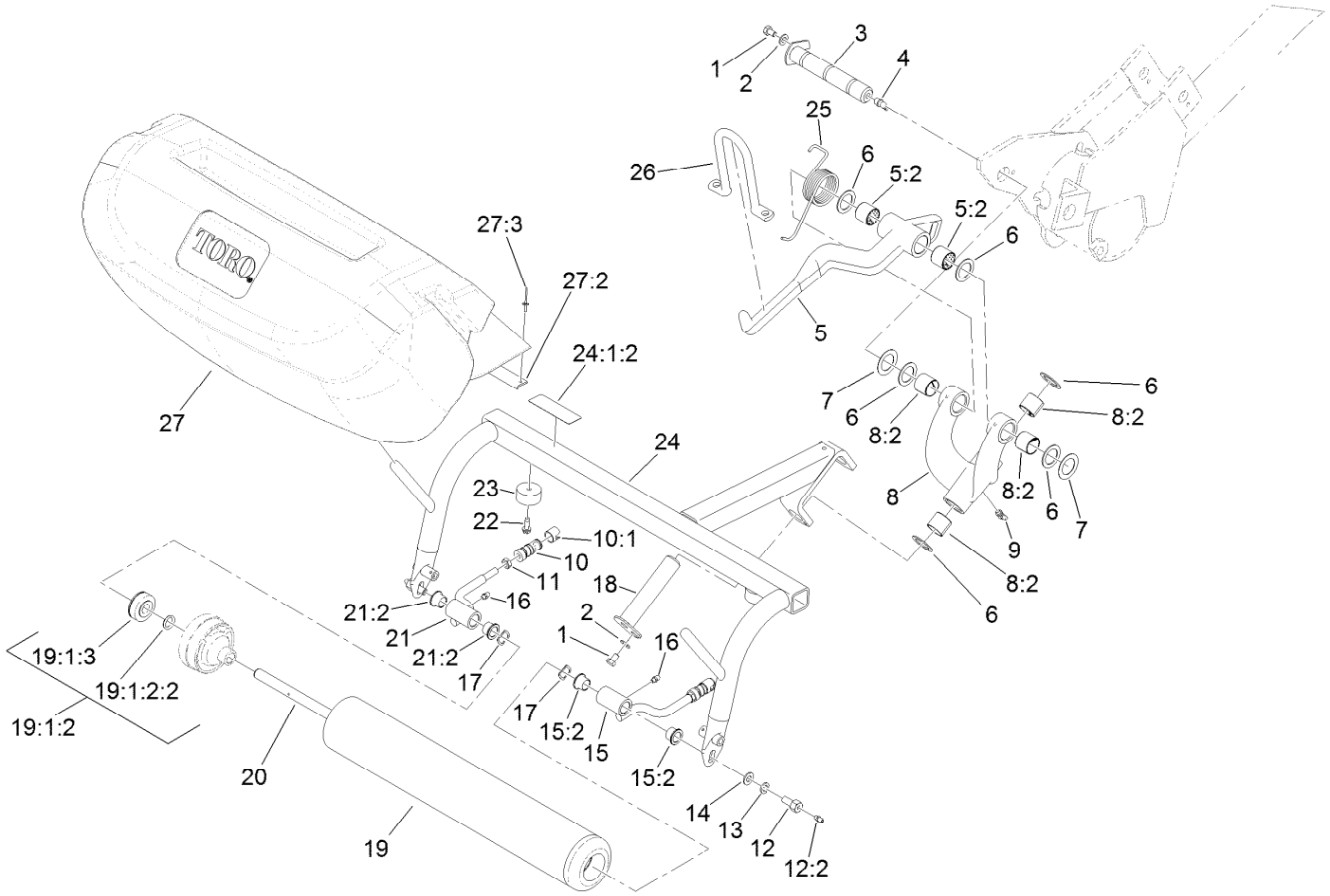

Right Pull Frame Assembly

Ref.	Part Number	Qty.	Description
1	322-1	2	Screw-HH
2	3256-23	2	Washer-Plain
3	114-4683	1	Pin-Hinge
4	302-33	1	Fitting-Grease
5	107-2599	1	RH Lift Arm ASM
5:2	125-5196	2	Bushing
6	10-8110	6	Washer-Thrust
7	5-1226	2	Washer
8	10-7820	1	Pivot Hinge ASM
8:2	125-5196	4	Bushing
9	302-60	1	Fitting-Grease
10	99-1460	2	Ball Joint Receiver ASM
10:1	99-1461	1	Sleeve-Joint, Ball
11	3220-3	2	Nut-HJ
12	11-0160	2	Roller Shaft Screw ASM
12:2	302-5	1	Fitting-Grease
13	3253-21	2	Washer-Lock
14	3256-24	2	Washer-Flat

Ref.	Part Number	Qty.	Description
15	92-0586	1	Pull Arm ASM
15:2	125-5178	2	Bushing
16	302-5	2	Fitting-Grease
17	3290-317	2	Washer-Spring
18	10-6090	1	Pin-Pivot
19	133-2337	1	Roller ASM
19:1:2		2	Hub Yoke ASM ●
19:1:2:2	253-83	1	Seal-Oil
19:1:3	133-2378	2	Bearing
20	21-8470	1	Shaft-Roller
21	92-0585	1	Pull Arm ASM
21:2	125-5178	2	Bushing
22	32104-95	2	Screw-HWH
23	94-4548	2	Bumper-Recessed
24	136-8483	1	Frame-Pull, RH
24:1:2	104-7729	1	Decal-Danger, CE
25	110-3951	1	Spring-Torsion, RH
26	105-5740	1	Hook-Lift

● Not serviced separately

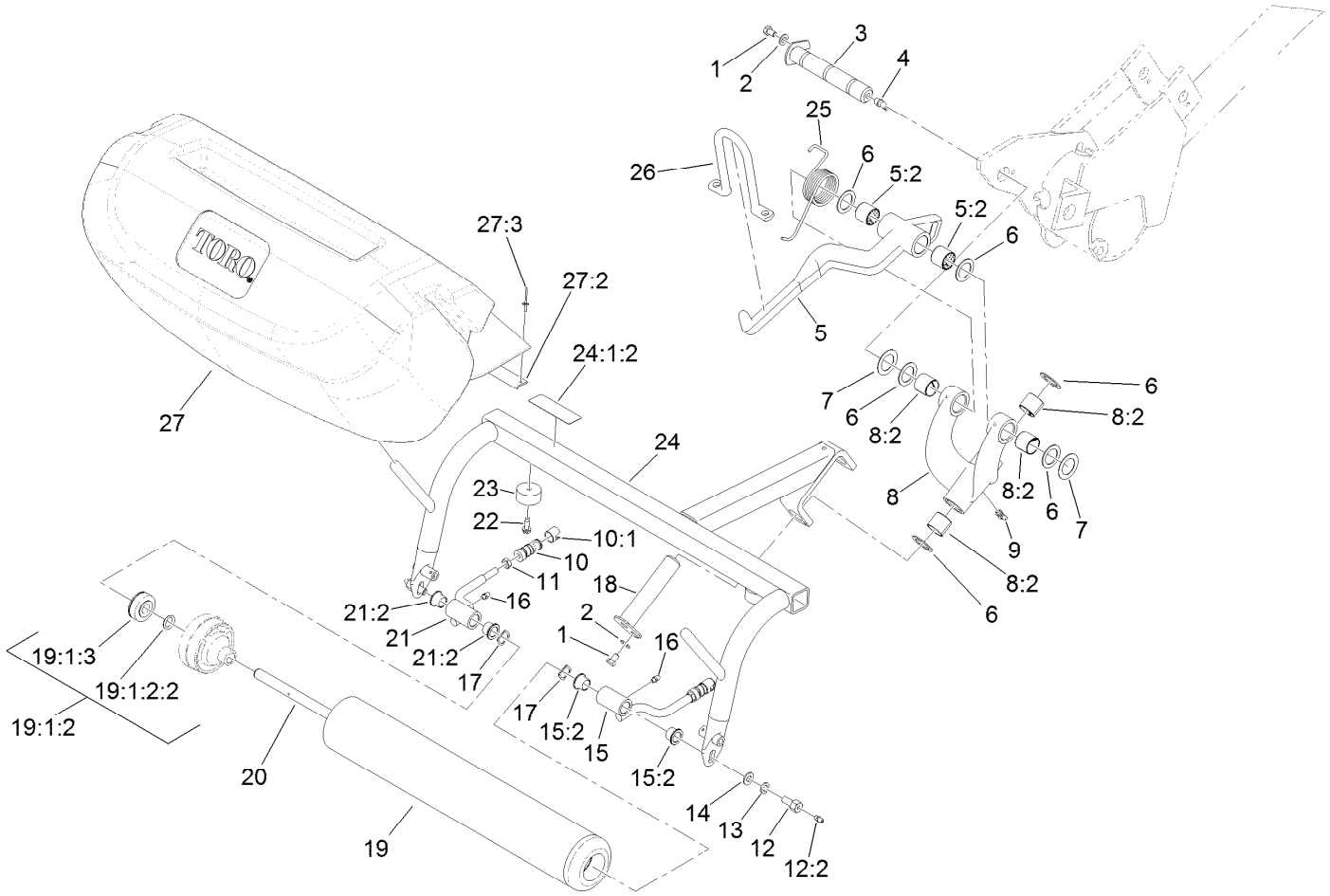

Right Pull Frame Assembly (continued)

Ref.	Part Number	Qty.	Description
27	108-8642	1	Grass Basket ASM

Ref.	Part Number	Qty.	Description
27:2	104-2607	1	Strip-Basket
27:3	3290-382	8	Rivet-Pop

● Not serviced separately

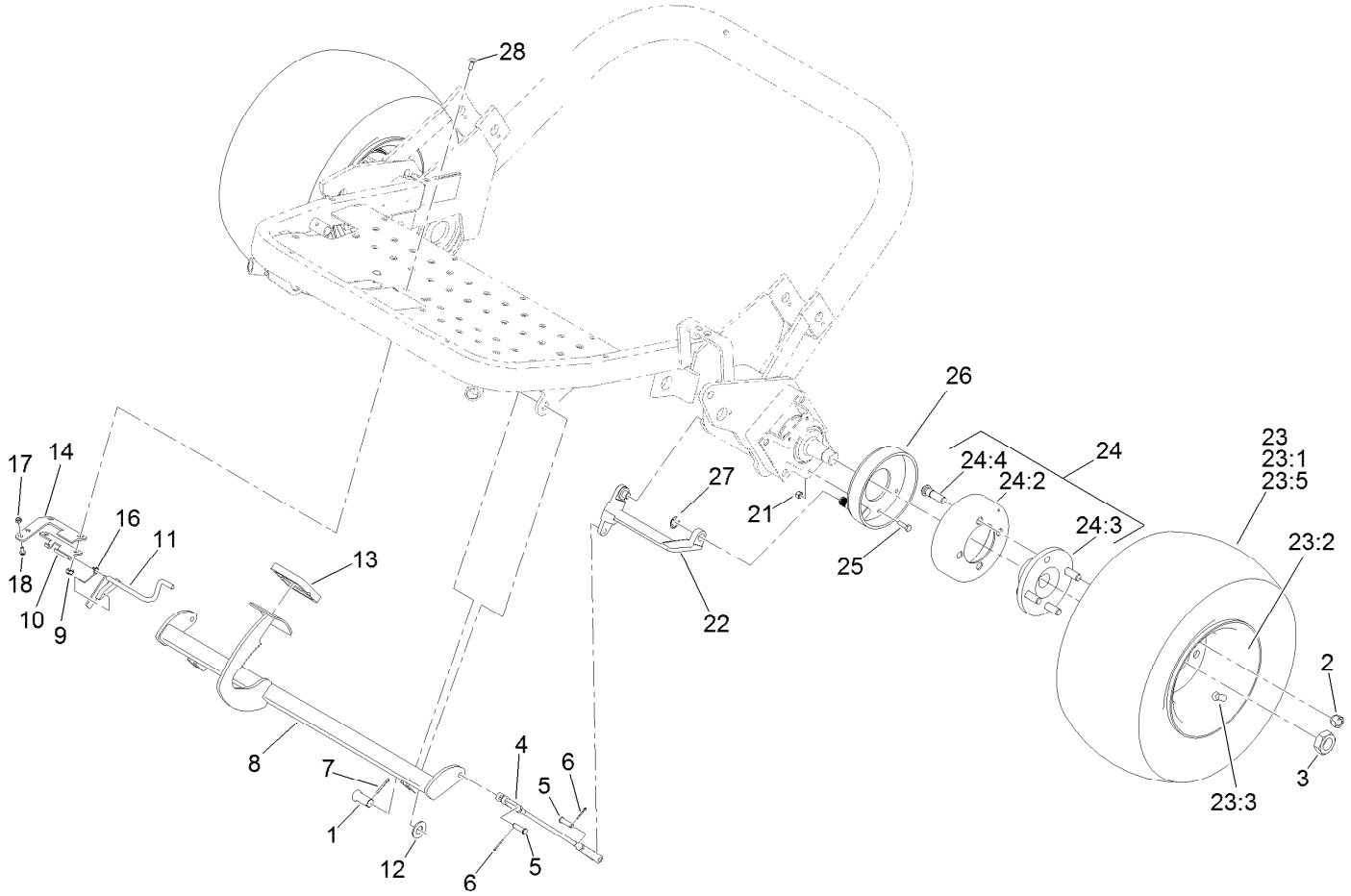

Front Wheel and Brake Assembly

Ref.	Part Number	Qty.	Description
1	283-87	2	Pin-Clevis
2	242-50	8	Nut-Lug
3	26-3790	2	Nut-Lock
4	130-0110	2	Brake Rod ASM
5	283-61	4	Pin-Yoke
6	3272-6	4	Pin-Cotter
7	3272-11	2	Pin-Cotter
8	127-2208-01	1	Pedal-Brake
9	3296-16	2	Nut-Lock, NI
10	131-2078	1	Sheet-Hinge, Sensor
11	131-2081	1	Latch
12	3256-27	2	Washer-Flat
13	93-7629	1	Pad-Foot, Brake
14	131-2077	1	Sheet-Hinge
16	132-6988	1	Spring-Brake Latch
17	3296-2	2	Nut-Lock, NI

Ref.	Part Number	Qty.	Description
18	3290-321	2	Screw-HWH
21	3296-42	8	Nut-Lock, NI
22	93-2096	2	Lever-Brake
23	10-6790	2	Wheel And Tire ASM
23:1	28-3680	1	Tire
23:2	217-60	1	Rim
23:3	232-27	1	Stem-Valve
23:5	232-37	1	Tube
24	10-6821	2	Brake Drum ASM
24:2	10-6850	1	Drum-Brake
24:3	10-6870-03	1	Hub-Wheel
24:4	85-6540	4	Stud-Drive
25	321-5	8	Screw-HH
26	104-7705	2	Brake ASM
27	104-7706	2	E-Ring, Bowed
28	3229-1	2	Screw-CARR

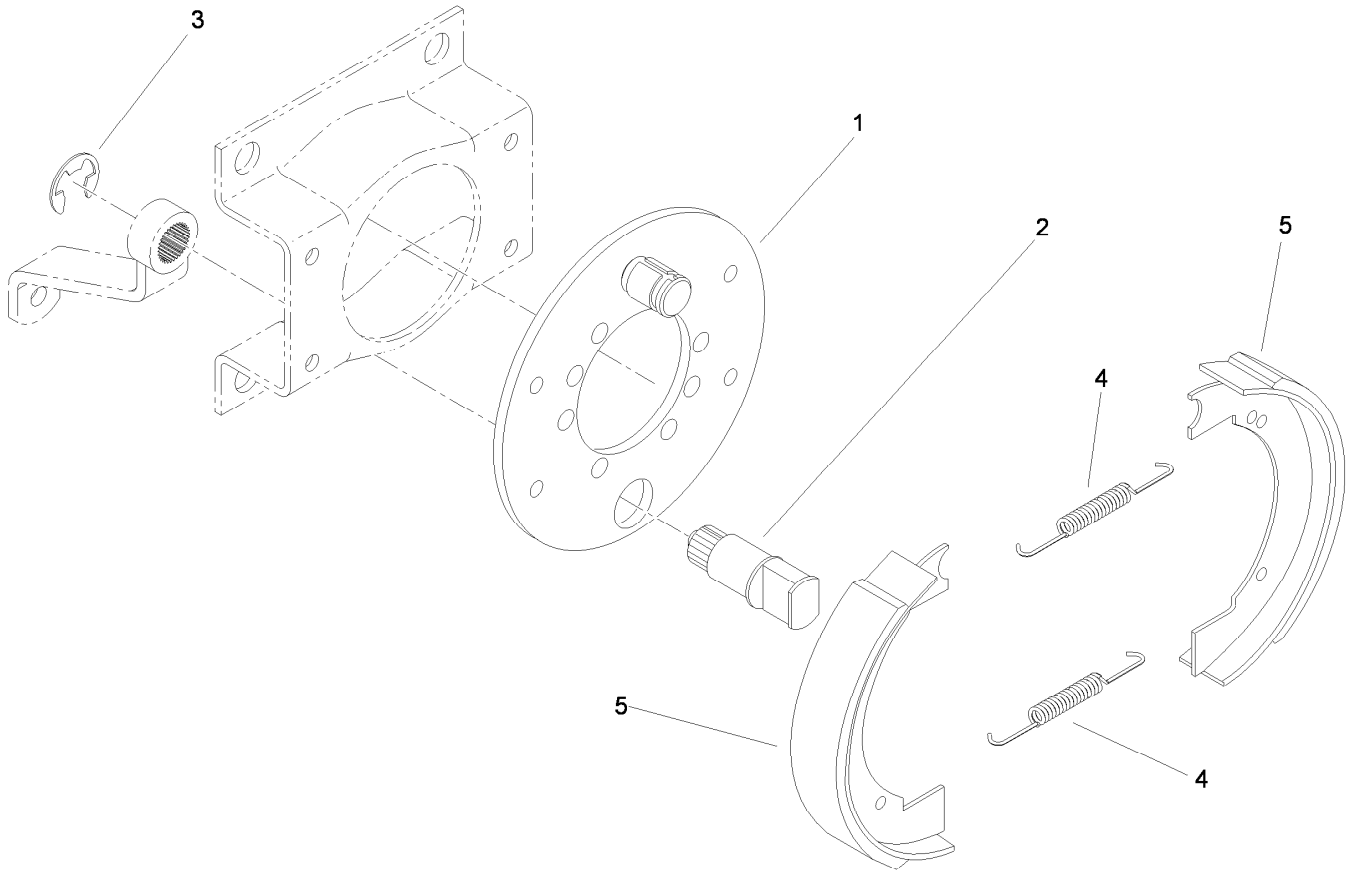

Brake Assembly No. 104-7705

Ref.	*Part Number*	*Qty.*	*Description*
1	70-9870	1	Plate-Backing
2	104-7707	1	Shaft-Cam, Brake
3	104-7706	1	E-Ring, Bowed
4	70-9880	2	Spring-Return
5	70-9840	2	Shoe-Brake

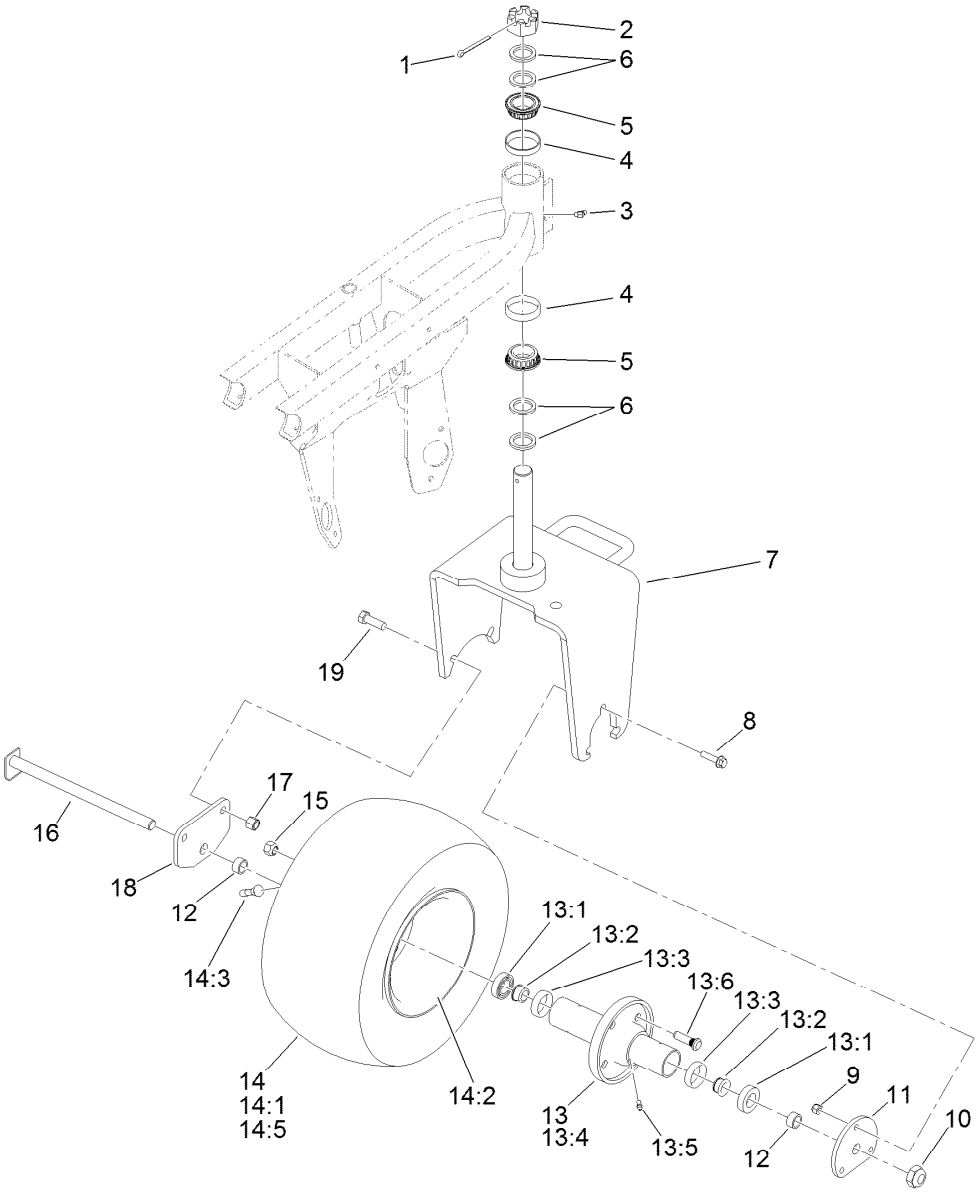

Rear Wheel Assembly

Ref.	Part Number	Qty.	Description
1	3272-37	1	Pin-Cotter
2	32136-9	1	Nut-Hex, Slotted
3	302-11	1	Fitting-Lube, 45 DEG
4	115-9471	2	Bearing-Cup
5	115-9472	2	Bearing-Cone And Seal
6	18-6320	4	Washer-Steering
7	112-0285-01	1	Fork-Castor
8	114-4681	3	Screw-HHF
9	3296-39	3	Nut-Lock, NI
10	3296-67	1	Nut-Lock, NI
11	99-1486-01	1	Plate-Adapter
12	74-3730	2	Spacer-Spindle, Rear
13	72-9710	1	Hub-Tire
13:1	253-111	2	Seal-Oil
13:2	254-78	2	Bearing-Cone

Ref.	Part Number	Qty.	Description
13:3	254-79	2	Bearing-Roller, Cup
13:4	75-9440	1	Hub ASM
13:5	302-11	1	Fitting-Lube, 45 DEG
13:6	10-6830	4	Stud-Type, Drive
14	10-6790	1	Wheel And Tire ASM
14:1	28-3680	1	Tire
14:2	217-60	1	Rim
14:3	232-27	1	Stem-Valve
14:5	232-37	1	Tube
15	242-50	4	Nut-Lug
16	5-3934	1	Bolt-Caster
17	3296-23	2	Nut-Lock, NI
18	99-1485-01	1	Plate-Adapter, Motor
19	325-6	2	Screw-HH

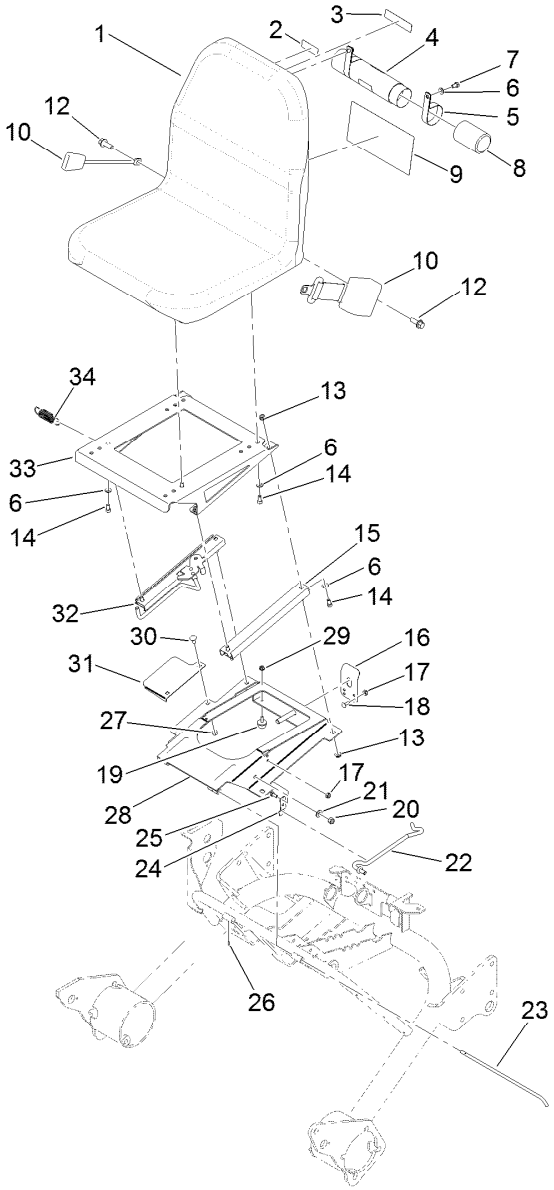

Seat Assembly

Ref.	Part Number	Qty.	Description
1	104-4620	1	Seat
2	93-6686	1	Decal-Oil, HYD
3	117-2718	1	Decal-Arrester, Spark
4	104-7050	1	Tube-Manual
5	2412-133	2	Clamp-R
6	3256-23	10	Washer-Plain
7	322-2	2	Screw-HH
8	104-7048	1	Cap-Housing
9	121-9566	1	Decal-Service
10	100-4928	1	Belt-Seat
12	117-9035	2	Screw-HHF
13	32128-25	8	Nut-HF
14	3274-12	8	Screw-HSH
15	51-0780	1	Slider-Seat
16	66-2630	1	Latch-Seat
17	3296-16	4	Nut-Lock, NI
18	3229-1	2	Screw-CARR
19	1-523420	2	Bumper
20	3296-39	1	Nut-Lock, NI
21	3256-24	1	Washer-Flat
22	106-4643	1	Rod-Prop, Seat
23	105-0483	1	Rod-Pivot, Seat
24	68-5310	1	Clip-Rod, Prop
25	321-3	2	Screw-HH
26	32121-7	1	Pin-Roll, Slotted
27	3296-29	2	Nut-Lock, NI
28	105-0464-03	1	Plate-Seat
29	32128-33	2	Nut-HF
30	3230-1	2	Bolt-CARR
31	105-8284-03	1	Shield-Valve
32	105-8265	1	Adjuster-Seat
33	105-0466-03	1	Plate-Seat, Upper
34	88-6330	1	Spring-Extension

Attachments and Accessories

For 04358 Greensmaster 3150 2-Wheel Drive Traction Unit

Product Name	Model/Part
Turf Evaluator	04399
CE Guard Kit	04440
Three-Wheel Drive Kit without ROPS	04476
Dethatching Unit	04479
Spiker Kit	04494
Tri-Roller Kit	04495
Light Kit	04554
8-Blade DPA Reel Mower	04652
11-Blade DPA Reel Mower	04654
14-Blade DPA Reel Mower	04656
Weight Kit, Greensmaster and Sand Pro/Infield Pro Traction Unit	100-6442
Spark Arrestor Screen	104-6540
Filter-Oil, Engine	107-7817
Premium All Season Hydraulic Fluid (55 Gallon Drum)	108-1177
Premium All Season Hydraulic Fluid (5 Gallon Pail)	108-1178
Premium Engine Oil SAE 30 (Drum)	108-1196
Premium Engine Oil SAE 30 (Pail)	108-1197
Bimini Folding Shade Assembly	115-4510
Wireless Hourmeter	115-4754
Hydraulic Hose Kit	117-2725
Premium Synthetic Bio-Degradable Hydraulic Fluid (5 Gallon Pail)	119-2157
Premium Synthetic Bio-Degradable Hydraulic Fluid (55 Gallon Drum)	119-2158
Tire-Traction	119-3516
Toro Reel Paper (10 Pack)	125-5610
Toro Reel Shim (0.002in)	125-5611
Oil Cooler Kit	130-6536
MVP Initial 800 Hour Filter Kit, 2012 and After Greensmaster 3150-D Traction Unit	131-6262
MVP Standard Filter Kit, 2012 and After Greensmaster 3150-D Traction Unit	131-8785
Cartridge-Cleaner, Air	92-0527
Element-Filter	92-0530
Filter-Fuel	94-2690
Height-of-Cut Bar	94-9010
Weight Kit, Greensmaster 3100, 3150 or 3250-D Traction Unit with Three-Wheel Drive	99-1645

Notes:

Notes:

TORO®

Count on it.