Form No. 3424-357 Rev B

TORO®

Count on it.

Parts Catalog

Reelmaster® 5410

Traction Unit

Model No. 03675—Serial No. 403280001 and Up

Register at www.Toro.com.
Original Instructions (EN)

CE

3424-357 B

Ordering Replacement Parts

To order replacement parts, please supply the part number, the quantity, and the description of each part desired.

Understanding Reference Numbers

Each identified part in an illustration has a reference number. The reference number for a part also appears in the parts list, along with other information about the part.

This catalog uses two special reference number formats, one to indicate parts in a service assembly and another to indicate the quantity of a given part in an illustration.

Service Assembly Reference Numbers

Parts in service assemblies have reference numbers in the form a:b. The a represents the reference number of the entire service assembly and the b represents a sequential number unique to each part within the service assembly.

For example, a wheel assembly might be identified by reference number 6, the tire by 6:1, the valve by 6:2, and the wheel by 6:3. When you order the assembly identified by reference number 6, you receive all parts identified by reference numbers 6:1,6:2, and 6:3. However, you may also order any part individually. Reference numbers of this type appear in illustration and in parts lists.

Reference Numbers Indicating Quantity

In an illustration, if a reference number indicates more than one part, the reference number has the form nX y. The n represents the quantity of the part, the X is the multiplication symbol, and the y represents the reference number.

For example, in an illustration, the reference number 2X 37 means that two of the parts identified by reference number 37 are indicated.

Contents

Frame Assembly . . . 5
Operator Platform and Front Shroud Assembly . . . 6
Pedal Assembly . . . 7
Steering Assembly . . . 9
Steering Tilt Column Assembly No. 106-3622 . . . 10
Steering Valve Assembly No. 106-3621 . . . 11
Console and Control Arm Assembly . . . 12
Joystick Bracket Assembly No. 120-5280 . . . 14
Front Axle Assembly . . . 15
LH Brake Assembly No. 120-6261 . . . 16
RH Brake Assembly No. 120-6260 . . . 17
Rear Axle Assembly . . . 18
Tie Rod Assembly No. 110-5334-03 . . . 19
Hub and Spindle Assembly No. 117-8961 . . . 20
No. 1, 4 and 5 Lift Arm Assembly . . . 21
No. 2 and 3 Lift Arm Assembly . . . 22
Seat and Control Arm Wiring Harness Assembly . . . 23
Main Wiring Harness Assembly . . . 24
Battery Mounting Assembly . . . 25
Gear Pump Mounting Assembly . . . 26
Gear Pump Assembly No. 105-7576 . . . 27
Seat Base Assembly . . . 28
Hood Assembly . . . 29
Cooling System Assembly . . . 30
Hydraulic Tank Assembly . . . 32
Fuel System Assembly . . . 33
Seat Mounting Assembly . . . 35
Mechanical Seat Suspension Assembly No. 110-8851 . . . 36
Traction Pump Mounting Assembly . . . 37
Hydraulic Pump Assembly No. 119-6972 . . . 38
Traction Hydraulic Assembly . . . 40
Hydraulic Motor Assembly No. 133-2935 (CCW) . . . 41
Hydraulic Motor Assembly No. 133-2934 (CW) . . . 42
No. 1, 4 and 5 Reel Drive Hydraulic Assembly . . . 43
Hydraulic Reel Motor Assembly No. 120-2072 . . . 45
Manifold Assembly No. 121-5628 . . . 46
No. 2 and 3 Reel Drive Hydraulic Assembly . . . 47
No. 1, 4 and 5 Lift Arm Hydraulic Assembly . . . 49
Hydraulic Cylinder Assembly No. 119-6988 . . . 50
Hydraulic Cylinder Assembly No. 119-6987 . . . 51
Hydraulic Manifold Block Assembly No. 105-7577 . . . 52
Rear Lift Hydraulic Assembly . . . 53
Steering Hydraulic Assembly . . . 54
Hydraulic Cylinder Assembly No. 110-9035 . . . 56
Engine, Muffler and Air Cleaner Assembly . . . 57
Air Cleaner Assembly No. 106-5277 . . . 59
Driveshaft Assembly No. 108-1641 . . . 60
Crankcase Assembly . . . 61
Oil Pan Assembly . . . 62
Cylinder Head Assembly . . . 63
Gear Case Assembly . . . 64
Cylinder Head Cover Assembly . . . 65
Dipstick and Guide Assembly . . . 66
Main Bearing Case Assembly . . . 67

© 2021—The Toro® Company

8111 Lyndale Avenue South
Bloomington, MN 55420

Contact us at www.Toro.com.
Printed in the USA.

All Rights Reserved

Contents (continued)

Cam Shaft and Idle Gear Assembly 68
Piston and Crankshaft Assembly 69
Flywheel Assembly 70
Fuel Camshaft and Governor Shaft Assembly 71
Idle Apparatus Assembly 72
Injection Pump Assembly 73
Governor Assembly 74
Speed Control Plate Assembly 75
Nozzle Holder and Glow Plug Assembly 76
Nozzle Holder Component Assembly 77
Alternator and Pulley Assembly 78
Alternator Components Assembly 79
Starter Assembly 80
Starter Component Part Assembly No. 111-7496 81
Thermostat Assembly 82
Water Pump Assembly 83
Valve and Rocker Arm Assembly 84
Intake and Exhaust Manifold Assembly 85
Muffler Gasket and Operator Manual Assembly 86
Attachments and Accessories 87

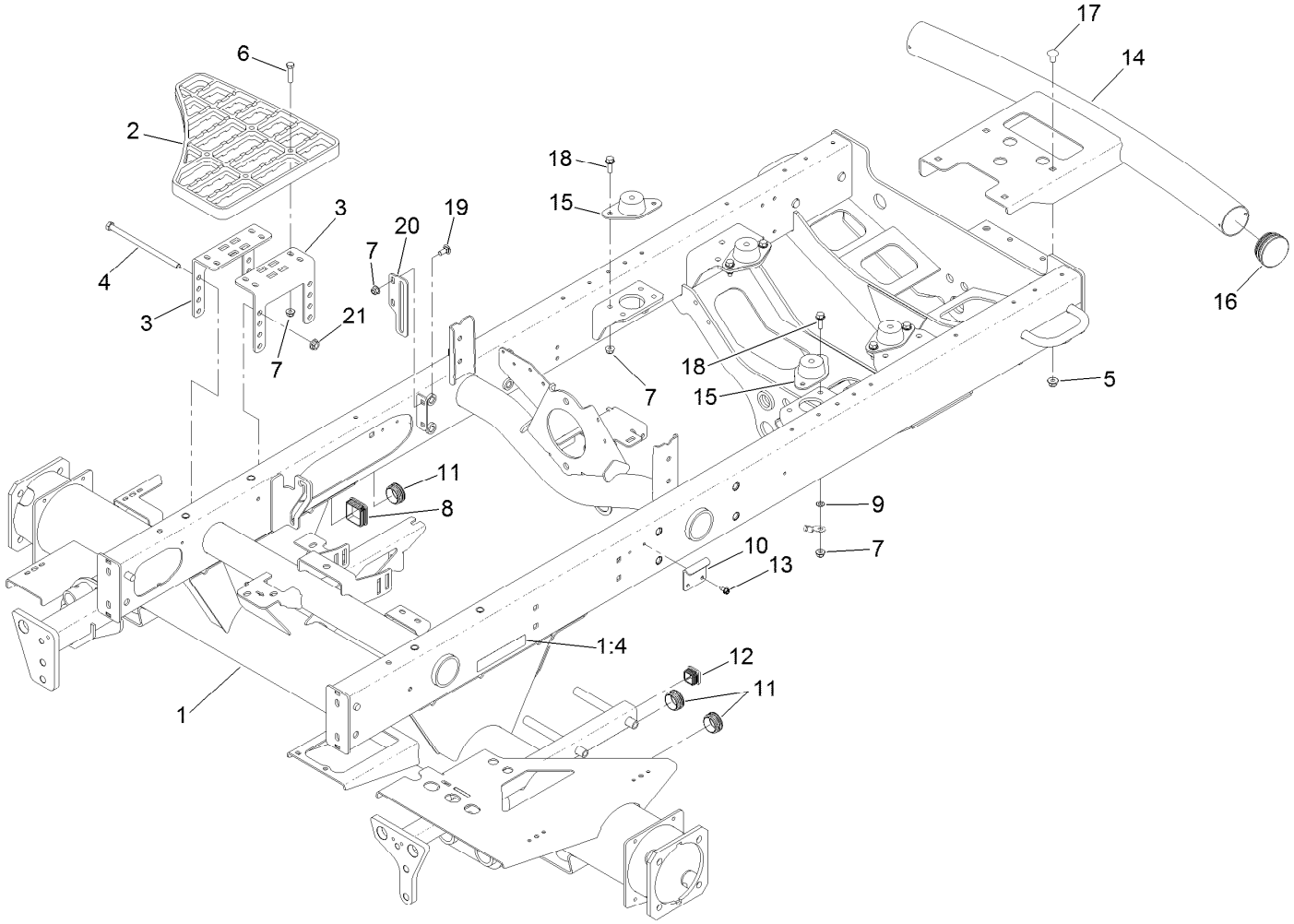

Frame Assembly

Ref.	Part Number	Qty.	Description
1	120-3803	1	Frame ASM
1:4	93-6689	2	Decal-No Riders
2	110-9041	2	Step-Aluminum
3	127-2697-01	4	Bracket-Step
4	323-36	4	Screw-HH
5	104-8301	4	Nut-HF, NI
6	322-17	8	Screw-HH
7	104-8300	18	Nut-HF, NI
8	95-9495	1	Cap
9	3255-8	1	Washer-Lock
10	110-8972	1	Hook-Latch

Ref.	Part Number	Qty.	Description
11	110-9012	5	Caplug
12	110-9013	1	Caplug
13	32104-17	2	Screw-HWH
14	110-8951-03	1	Bumper
15	120-6274	4	Mount-Engine
16	2410-42	2	Cap-End
17	3231-21	4	Screw-CARR
18	3234-29	8	Screw-HHF
19	3230-1	2	Bolt-CARR
20	108-7584-01	1	Plate-Guide, Rod
21	32128-21	4	Nut-HF Lock

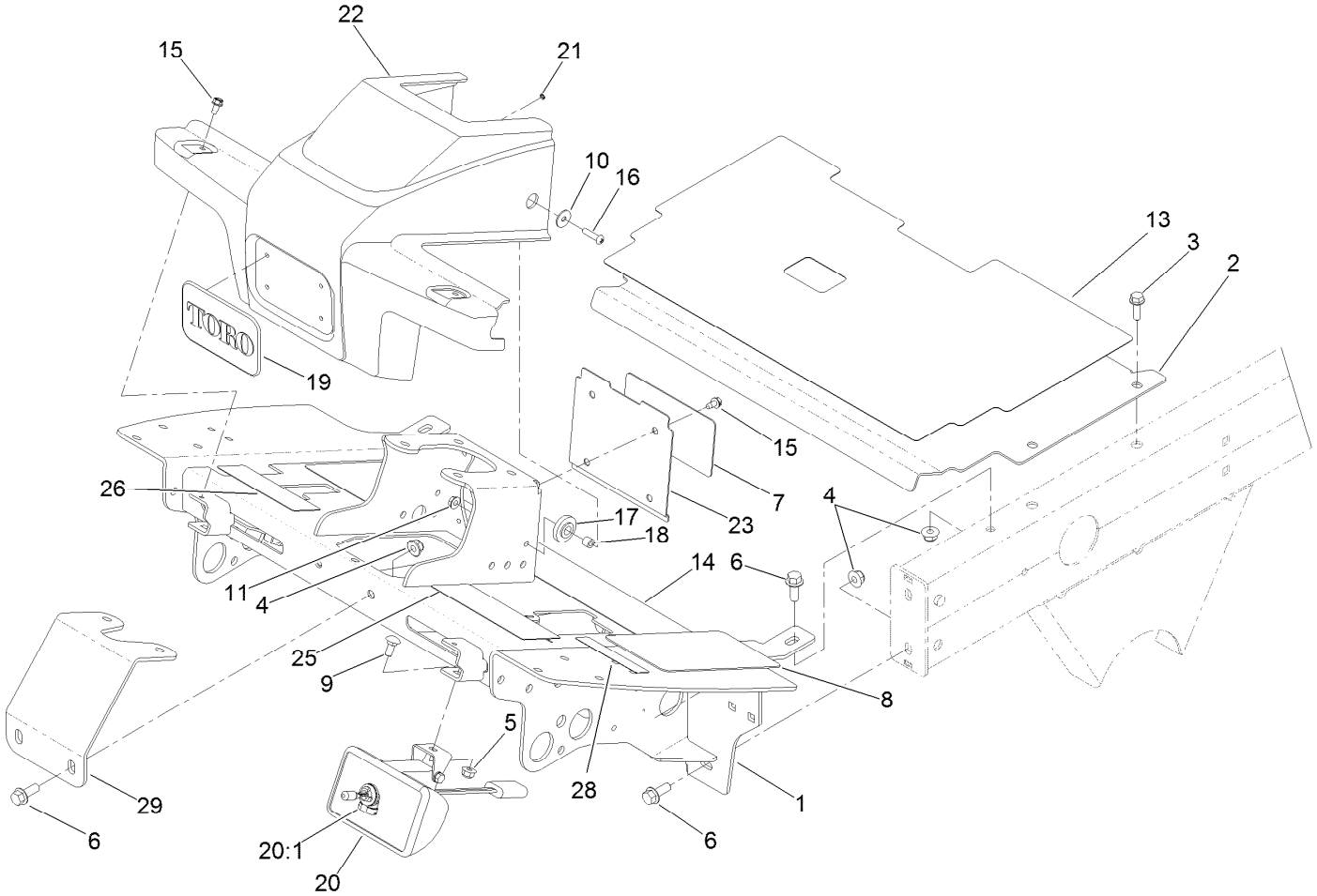

Items 20:2, 20:3 and 20:4
not used on this model.

Operator Platform and Front Shroud Assembly

Ref.	Part Number	Qty.	Description
1	127-2310-01	1	Platform ASM
2	115-8064-01	1	Plate-Floor
3	3234-17	4	Screw-HHF
4	104-8301	6	Nut-HF, NI
5	104-8300	2	Nut-HF, NI
6	3234-11	6	Screw-HHF
7	110-0986	1	Decal-Plate, Cover
8	125-2910	2	Tread-Floor, Side
9	3230-1	2	Bolt-CARR
10	87-6630	2	Washer-Plain
11	32128-33	2	Nut-HF
13	125-2911	1	Tread-Panel, Service
14	125-2909	1	Tread-Floorboard
15	32104-17	6	Screw-HWH
16	106-9518	2	Screw-PRH
17	240-11	2	Bushing-Flange

Ref.	Part Number	Qty.	Description
18	66-8010	2	Spacer
19	93-6028	1	Plate-Logo
20	94-9024	2	Lamp ASM
20:1	95-0909	1	Lamp-12 Volt
20:2	3230-28	1	Screw-CARR
20:3	3253-33	1	Washer-Lock
20:4	3217-6	1	Nut-Hex
21	3254-9	4	Washer-Lock, Internal
22	110-0944	1	Shroud-Platform
23	110-0947-03	1	Plate-Cover
25	133-2930	1	Decal-Danger
25	133-2931	1	Decal-Danger (CE)
26	110-8921	1	Decal-Speed, Mow
28	133-8062	1	Decal-Arrestor, Spark
29	110-8876-01	1	Brace-Column

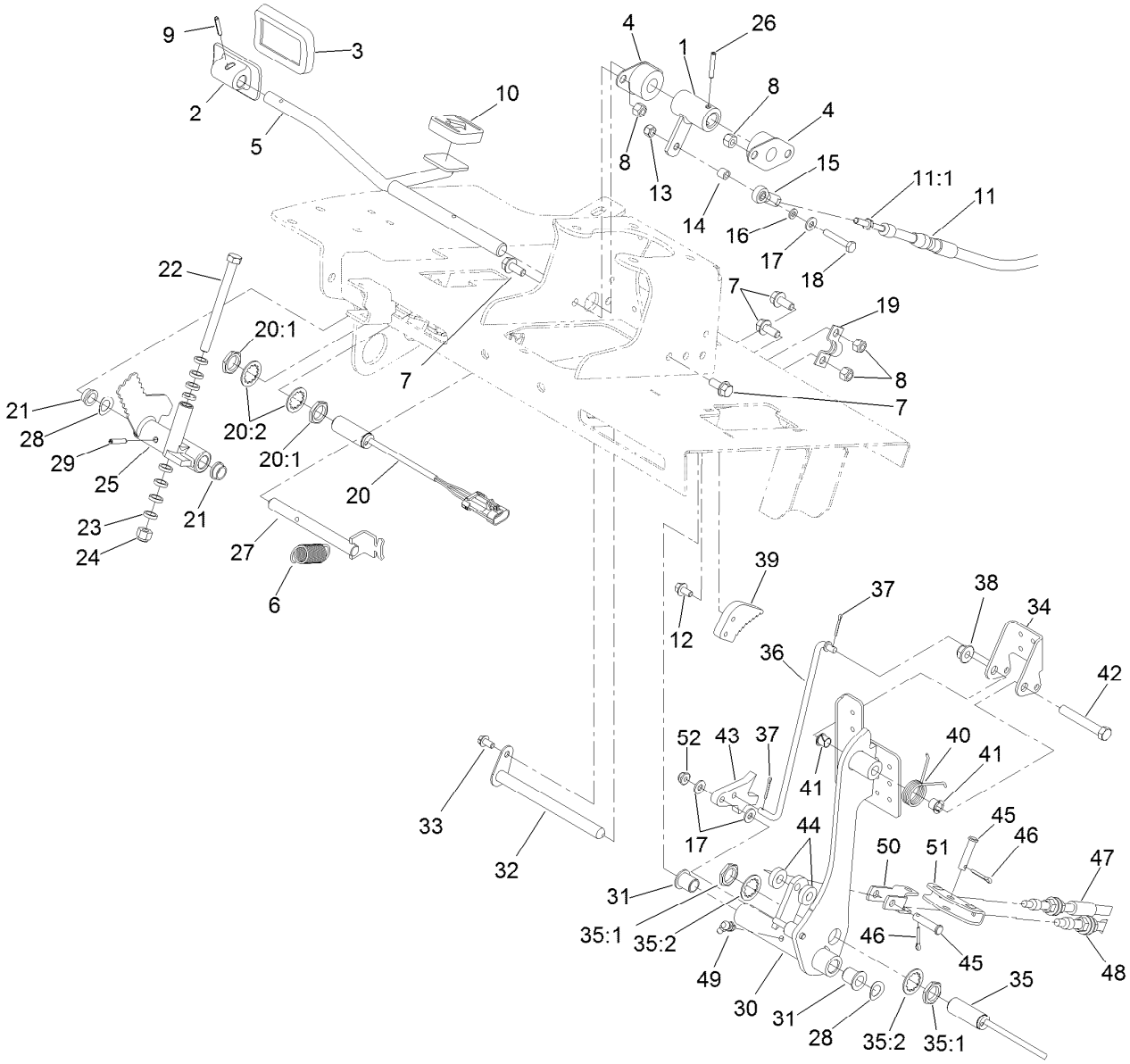

Pedal Assembly

Ref.	Part Number	Qty.	Description
1	117-5199	1	Hub-Pedal, Traction
2	117-9507	1	Pedal-Accelerator
3	74-9100	1	Pad-Pedal, Forward
4	256-236	2	Bearing-Mount, Flange
5	106-3840	1	Pedal-Traction
6	92-7305	1	Spring-Extension
7	3234-5	6	Screw-HHF
8	3296-29	6	Nut-Lock, NI
9	32121-45	1	Pin-Spring
10	74-9110	1	Pad-Pedal, Reverse
11	127-2721	1	Cable-Traction
11:1	3220-1	2	Nut-Jam
12	3234-13	2	Screw-HHF
13	3296-42	1	Nut-Lock, NI
14	66-8010	1	Spacer
15	2411-41	1	Rod End-Ball Joint
16	33093-00	1	Washer-Flat
17	3256-22	3	Washer-Flat
18	321-9	1	Screw-HH
19	93-2092	1	Clamp-Cable
20	115-0282	1	Proximity Sensor ASM

Ref.	Part Number	Qty.	Description
20:1	117-3207	2	Nut-Hex
20:2	117-3208	2	Washer-Lock, Internal Tooth
21	256-156	2	Bushing-Flange
22	323-17	1	Screw-HH
23	62-4420	8	Washer
24	3296-39	1	Nut-Lock, NI
25	117-8066	1	Mow-Stop
26	32121-6	1	Pin-Roll, Slotted
27	106-3731	1	Rod-Pivot
28	110-8982	2	Washer-Spring
29	32121-16	1	Pin-Spring
30	115-0120-03	1	Pedal-Brake
31	125-8775	2	Bushing-Flange
32	104-7179	1	Pivot-Pedal
33	32144-4	1	Screw-HWH
34	99-7963-03	1	Pedal-Park
35	115-5300	1	Proximity Switch ASM
35:1	117-3207	2	Nut-Hex
35:2	117-3208	2	Washer-Lock, Internal Tooth
36	115-0129	1	Rod-Pawl, Brake
37	3272-6	2	Pin-Cotter

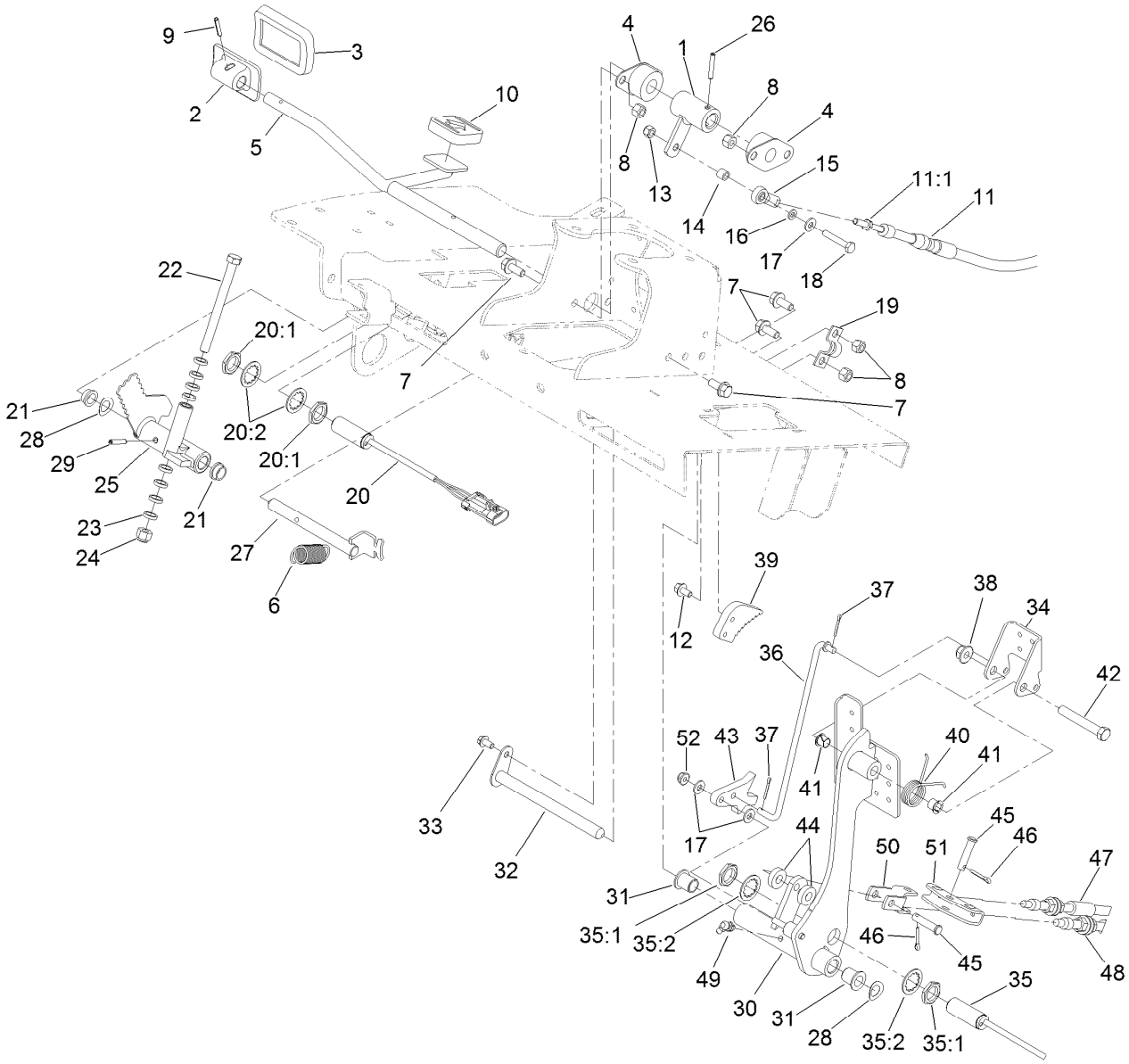

Pedal Assembly (continued)

Ref.	Part Number	Qty.	Description
38	104-8301	1	Nut-HF, NI
39	99-7214	1	Pawl-Brake
40	99-7140	1	Spring-Torsion
41	52-2891	2	Bushing-Flanged, Nylon
42	323-12	1	Screw-HH
43	117-0238	1	Detent
44	5-0652	2	Spacer
45	283-14	2	Pin-Clevis
46	3272-10	2	Pin-Cotter
47	117-0106	1	Cable-Brake, RH
48	117-0107	1	Cable-Brake, LH
49	302-60	1	Fitting-Grease
50	115-8060	1	Clevis-Double
51	115-8059	1	Yoke-Cable
52	104-7201	1	Nut-HF, NI

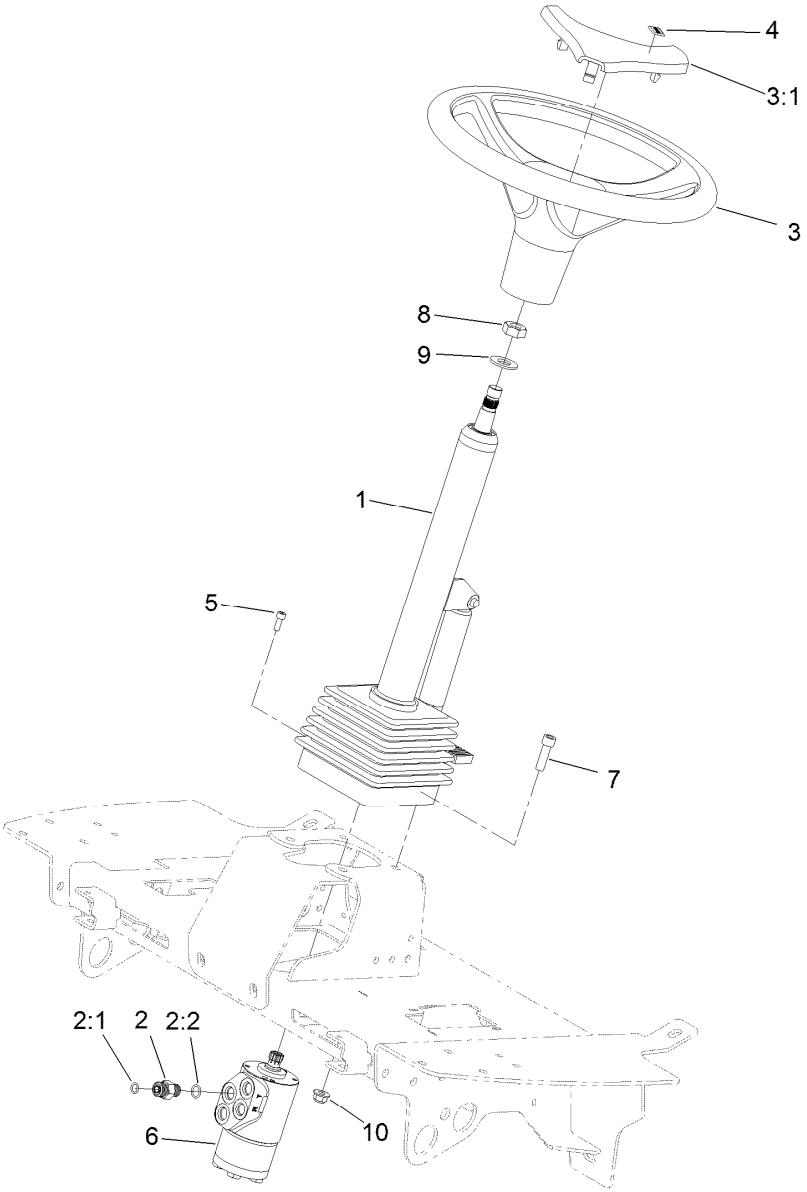

Steering Assembly

Ref.	Part Number	Qty.	Description
1	106-3622	1	Steering Tilt Column ASM
2	340-2	4	Fitting-Straight
2:1	237-22	1	O-Ring
2:2	237-42	1	O-Ring
3	98-1471	1	Wheel-Steering
3:1	98-1468	1	Cover-Wheel, Steering
4	98-1459	1	Decal
5	105-2409	4	Screw-HSH
6	106-3621	1	Steering Valve ASM
7	3274-1	4	Screw-HSH
8	3296-33	1	Nut-Lock, NI
9	3256-27	1	Washer-Flat
10	104-8301	4	Nut-HF, NI

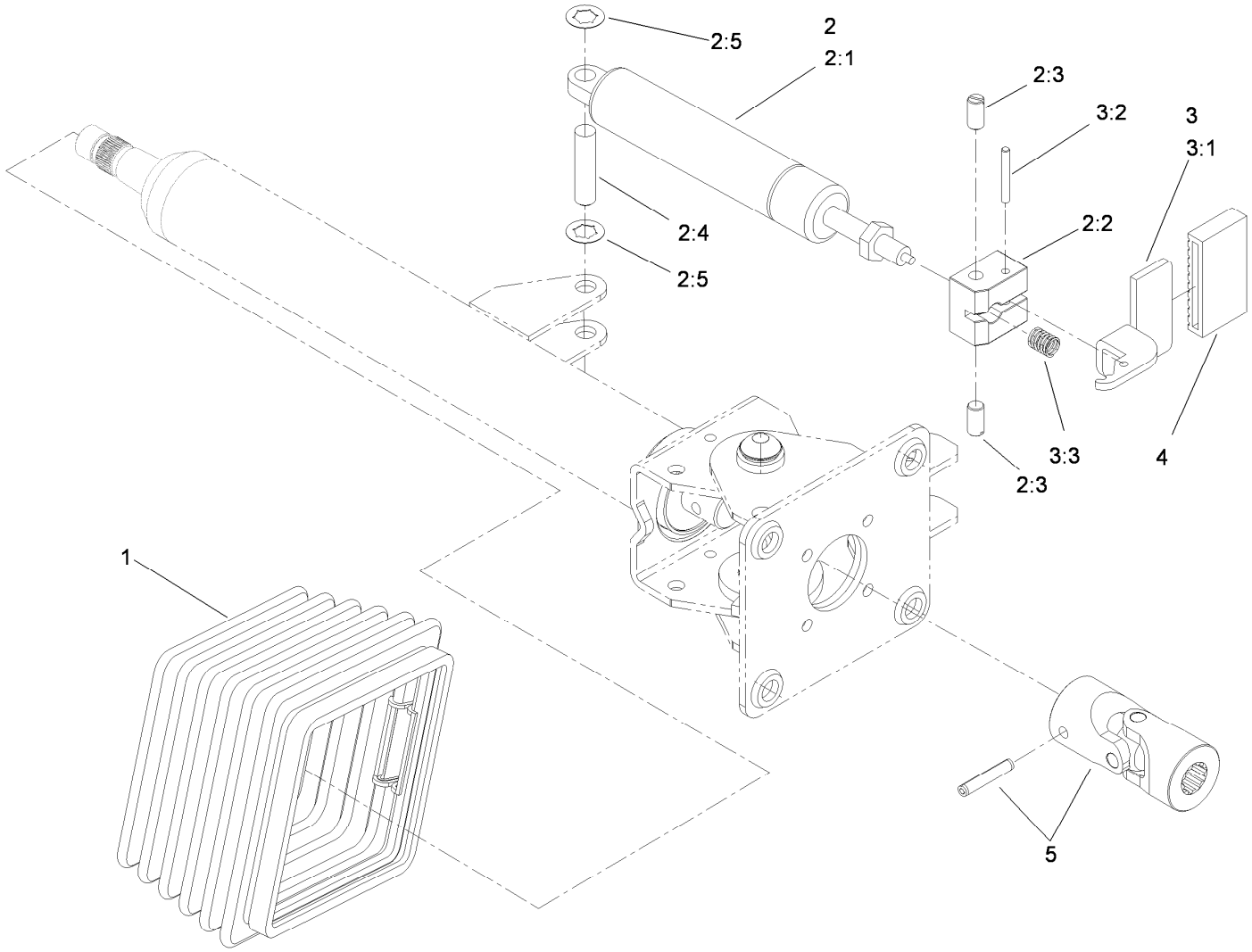

Steering Tilt Column Assembly No. 106-3622

Ref.	*Part Number*	*Qty.*	*Description*
1	110-6462	1	Bellows-Rubber
2	110-6463	1	Cylinder Service Kit
2:1		1	Cylinder-Gas ●
2:2		1	Block-Pedal ●
2:3		2	Bolt ●
2:4		1	Pin ●
2:5		2	Washer-Lock ●
3	110-6464	1	Pedal Service Kit
3:1		1	Pedal ●
3:2		1	Pin ●
3:3		1	Spring ●
4	110-6465	1	Cover-Pedal
5	120-6256	1	Universal Joint Kit

● Not serviced separately

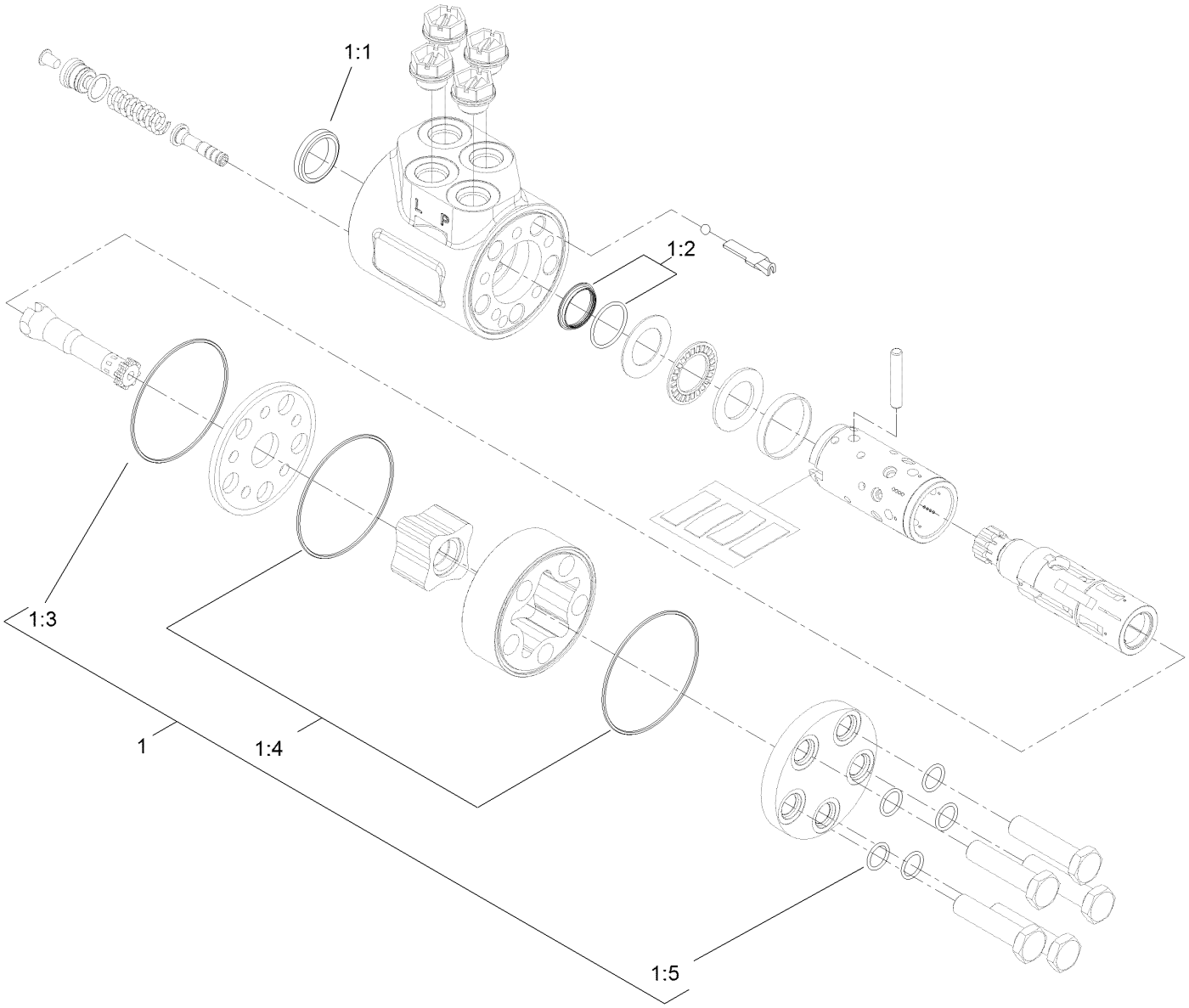

Steering Valve Assembly No. 106-3621

Ref.	*Part Number*	*Qty.*	*Description*
1	106-6716	1	Seal Kit
1:1		1	Ring-Seal, Dust ●
1:2		1	Seal-Shaft ●
1:3		1	O-Ring ●
1:4		2	O-Ring ●
1:5		5	O-Ring ●

● Not serviced separately

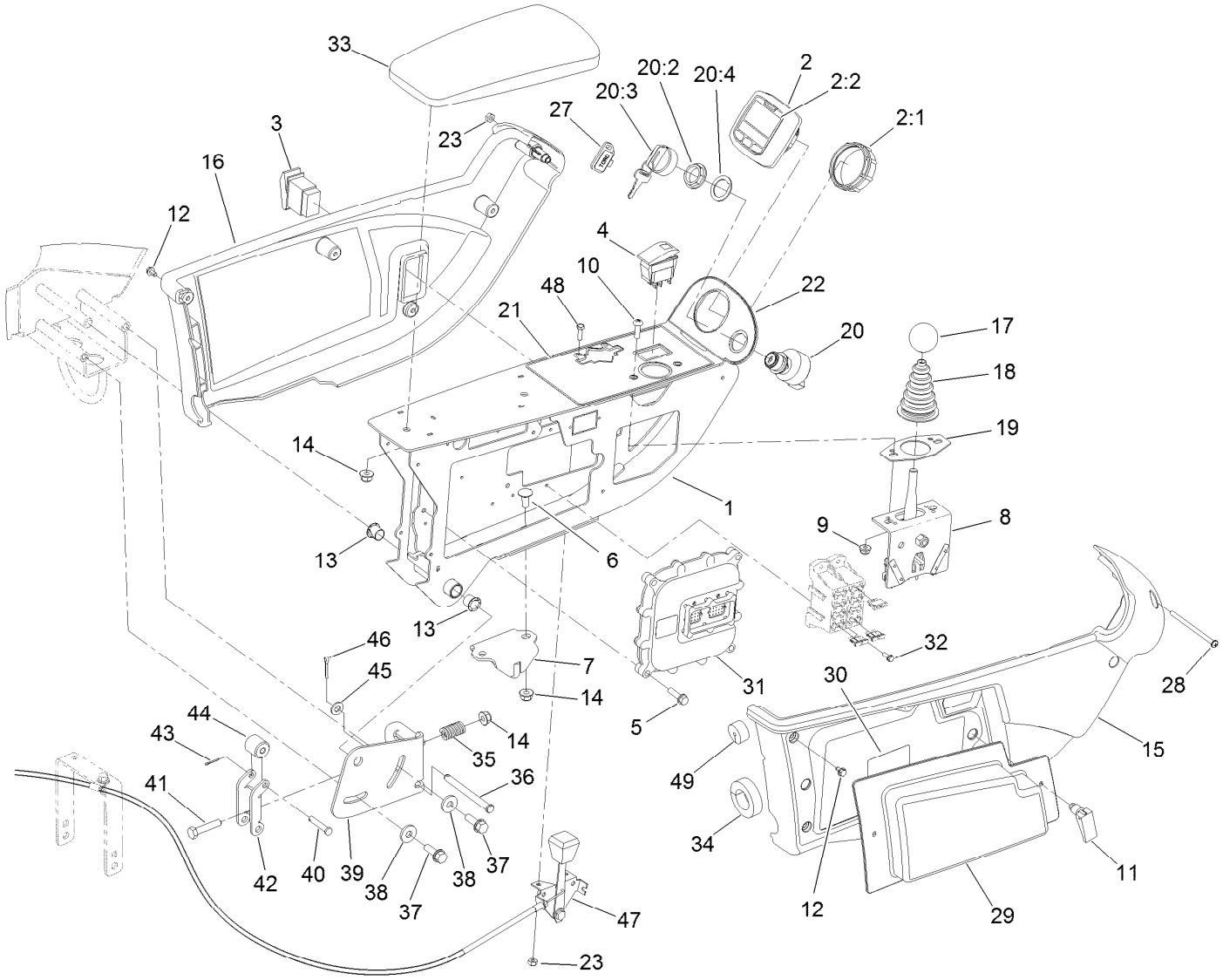

Console and Control Arm Assembly

Ref.	Part Number	Qty.	Description
1	120-3801-03	1	Frame-Arm, Control
2	120-6310	1	LCD Display ASM
2:1	120-4630	1	Nut-Display
2:2	120-6311	1	Decal-Display
3	95-8999	1	Switch
4	105-4232	1	Switch
5	32144-86	4	Screw-HWHTF
6	3230-23	2	Bolt-CARR
7	125-1938	1	Latch
8	120-5280	1	Bracket-Joystick
9	104-7201	2	Nut-HF, NI
10	3258-166	2	Screw-PRH
11	74-5950	2	Latch-Swell
12	104-2065	10	Screw-HWH
13	256-257	2	Bushing-Nyliner
14	104-8300	5	Nut-HF, NI
15	108-7605	1	Cover-RH
16	108-7604	1	Cover-LH
17	233-42	1	Knob
18	93-5961	1	Boot-Lever
19	112-9181	1	Plate-Boot

Ref.	Part Number	Qty.	Description
20	106-5269	1	Ignition Switch ASM
20:2	108-8660	1	Nut-Mounting
20:3	106-5270	1	Ignition Key Set
20:4	108-8659	1	Washer-Backup
21	121-5644	1	Decal-Control Panel
22	120-4158	1	Decal-Console, Upper
23	3296-2	3	Nut-Lock, NI
27	99-8970	1	Key-Latch, Hood
28	3250-22	1	Screw-PPH
29	114-0446	1	Panel-Access
30	117-0169	1	Decal-Fuses
31	114-3321	1	Controller-Tec
32	32144-87	4	Screw-HWHTF
33	108-7602	1	Rest-Arm
34	110-8912	1	Seal-Foam
35	110-5331	1	Spring-Compression
36	283-88	1	Pin-Clevis
37	32144-41	2	Screw-Taptite
38	4-2390	2	Washer-Flat
39	110-5313-03	1	Bracket-Retainer
40	283-73	1	Pin-Clevis

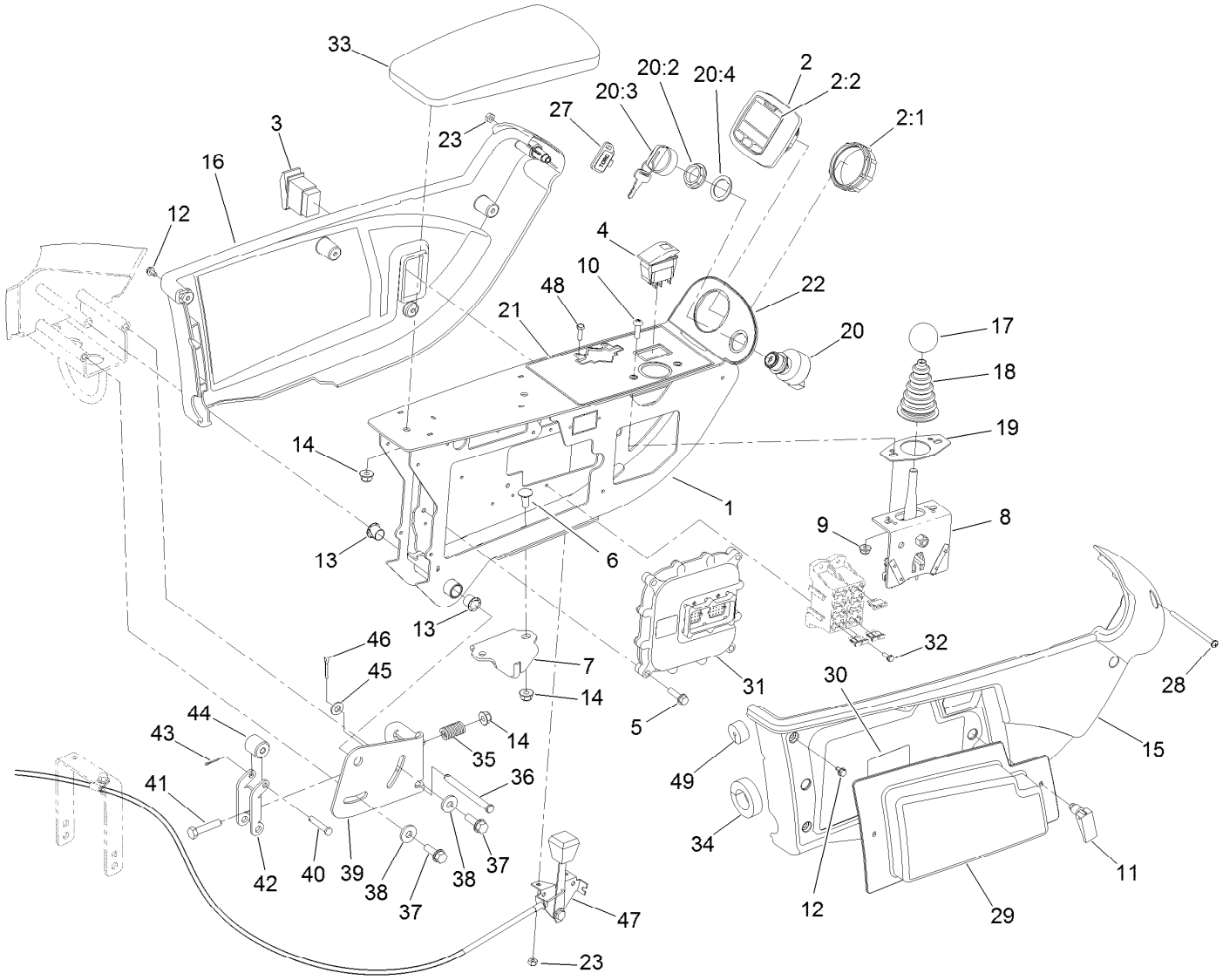

Console and Control Arm Assembly (continued)

Ref.	Part Number	Qty.	Description
41	322-7	1	Screw-HH
42	110-5314	1	Latch
43	3272-1	1	Pin-Cotter
44	110-8856	1	Spacer
45	3256-23	1	Washer-Plain
46	3272-10	1	Pin-Cotter
47	133-2929	1	Control-Throttle
48	3290-134	2	Screw
49	110-8911	1	Seal-Foam

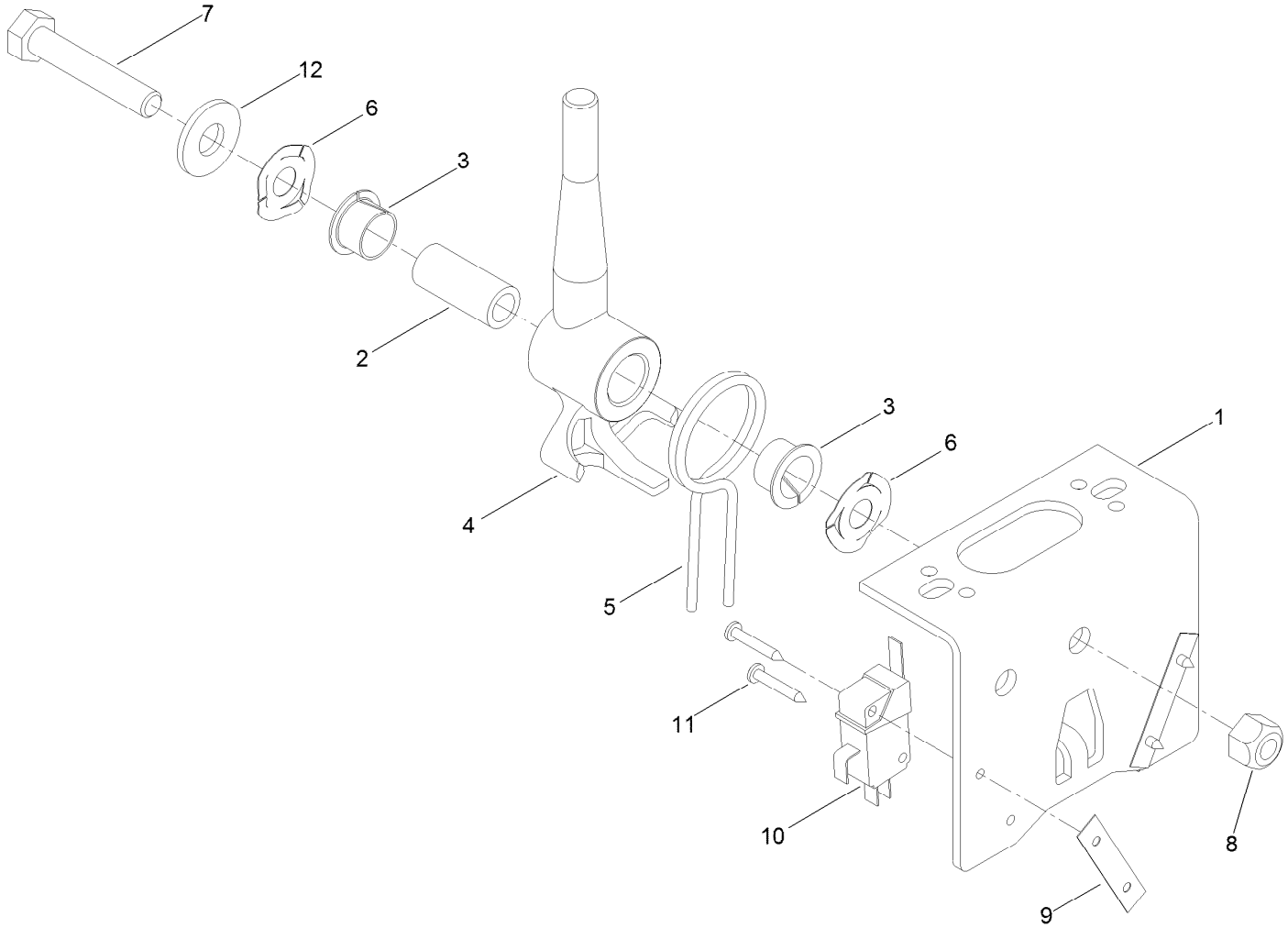

Joystick Bracket Assembly No. 120-5280

Ref.	*Part Number*	*Qty.*	*Description*
1	115-5357-03	1	Bracket-Joystick
2	106-4192	1	Spacer
3	93-5547	2	Bushing-Nylon
4	119-3540	1	Hub-Pivot, Joystick
5	105-8289	1	Spring-Torsion
6	106-4193	2	Washer-Finger, Spring
7	322-9	1	Screw-HH
8	3296-29	1	Nut-Lock, NI
9	3290-354	2	Nut-Speed
10	108-6496	2	Switch (W/Boot)
11	95-3003	4	Screw-PPHTF
12	3256-3	1	Washer-Flat

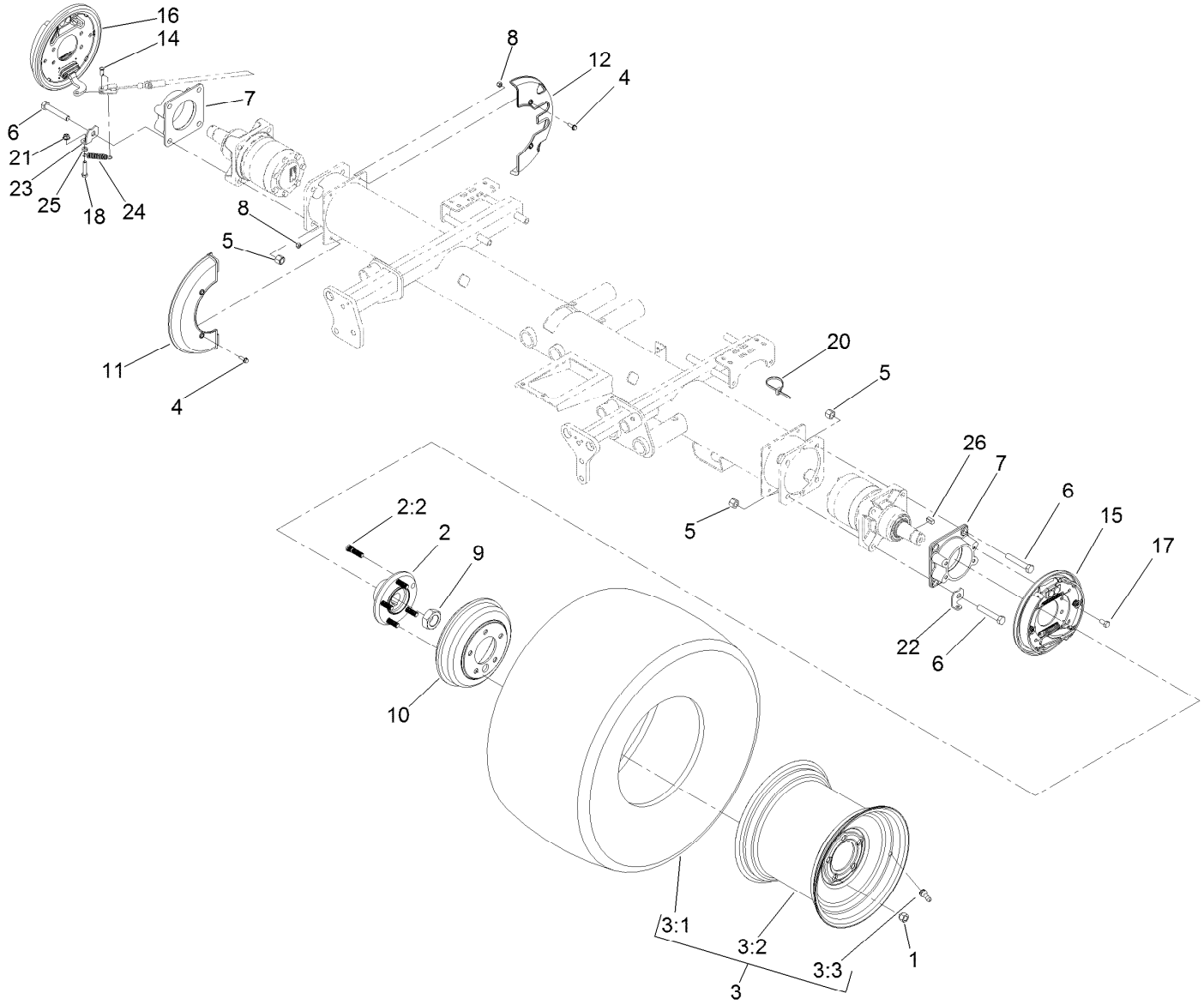

Front Axle Assembly

Ref.	Part Number	Qty.	Description
1	242-50	10	Nut-Lug
2	121-5631	2	Hub ASM
2:2	114-3918	5	Stud-Wheel
3	136-7963	2	Tire ASM
3:1	117-5196	1	Tire
3:2	136-7964	1	Wheel
3:3	232-27	1	Stem-Valve
4	115-5103	8	Screw-HHF
5	3296-23	8	Nut-Lock, NI
6	325-12	8	Screw-HH
7	120-6253-03	2	Adapter-Brake
8	3296-42	8	Nut-Lock, NI
9	117-3290	2	Nut-Hex
10	114-8864	2	Drum-Brake

Ref.	Part Number	Qty.	Description
11	127-2741	2	Shield-Wheel, Front
12	127-2742	2	Shield-Wheel, Rear
14	283-62	2	Pin-Clevis
15	120-6261	1	LH Brake ASM
16	120-6260	1	RH Brake ASM
17	323-4	8	Screw-HH
18	322-7	2	Screw-HH
20	3290-378	2	Tie-Cable
21	104-8300	2	Nut-HF, NI
22	120-6267	1	Clip-Spring, LH
23	120-6266	1	Clip-Spring, RH
24	87-4020	2	Spring-Extension
25	3218-2	2	Nut-Hex Jam
26	117-5198	2	Key-Square

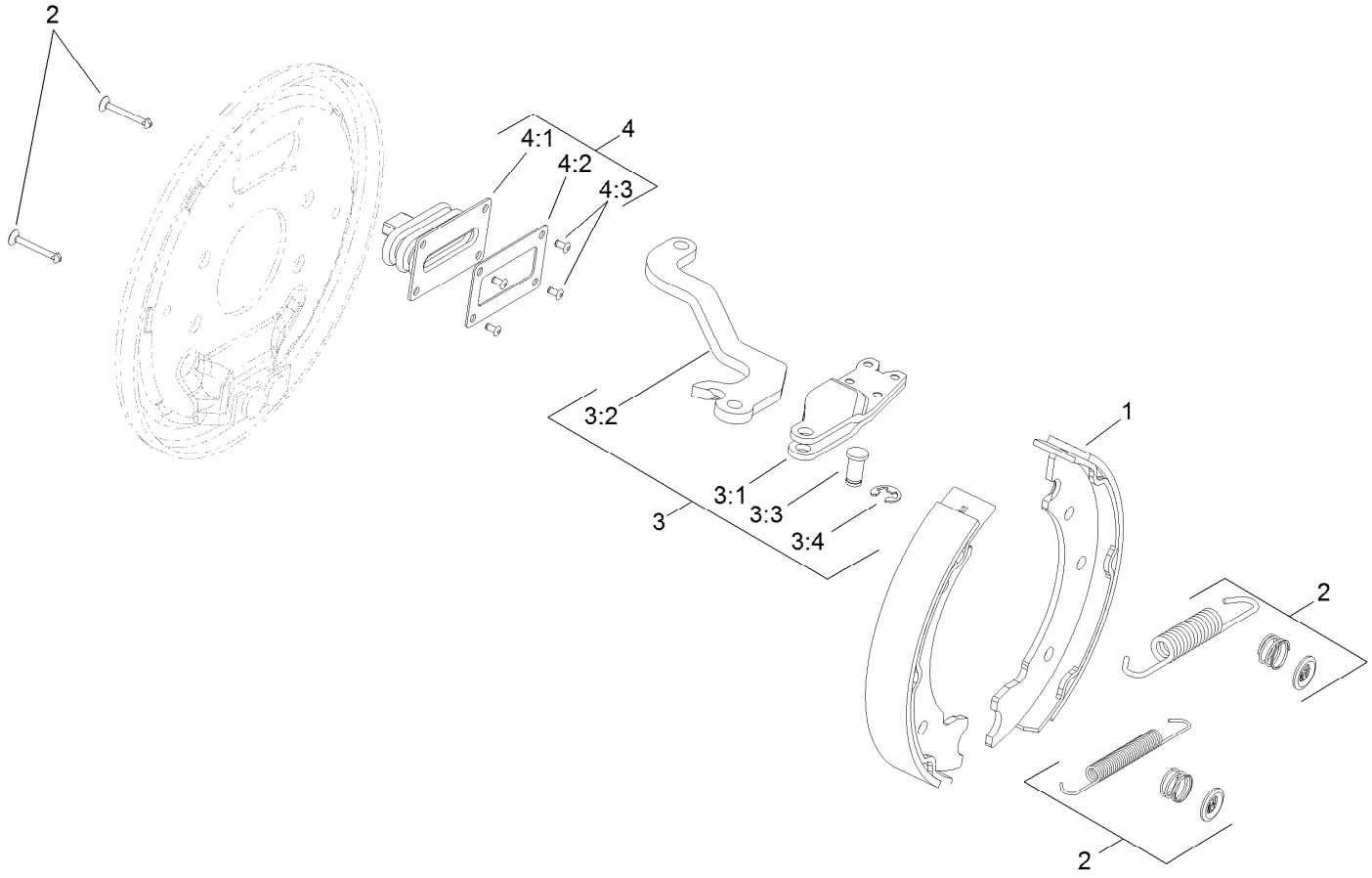

LH Brake Assembly No. 120-6261

Ref.	*Part Number*	*Qty.*	*Description*
1	108-6981	1	Brake Shoe Kit
2	108-6983	1	Brake Hardware Kit
3	110-8910	1	LH Actuator Kit
3:1		1	Housing ●
3:2		1	Lever-LH ●
3:3		1	Pin-Pivot ●
3:4		1	E-Ring ●
4	110-8885	1	Dust Boot Kit
4:1		1	Boot ●
4:2		1	Plate-Back Up ●
4:3		2	Rivet ●

● Not serviced separately

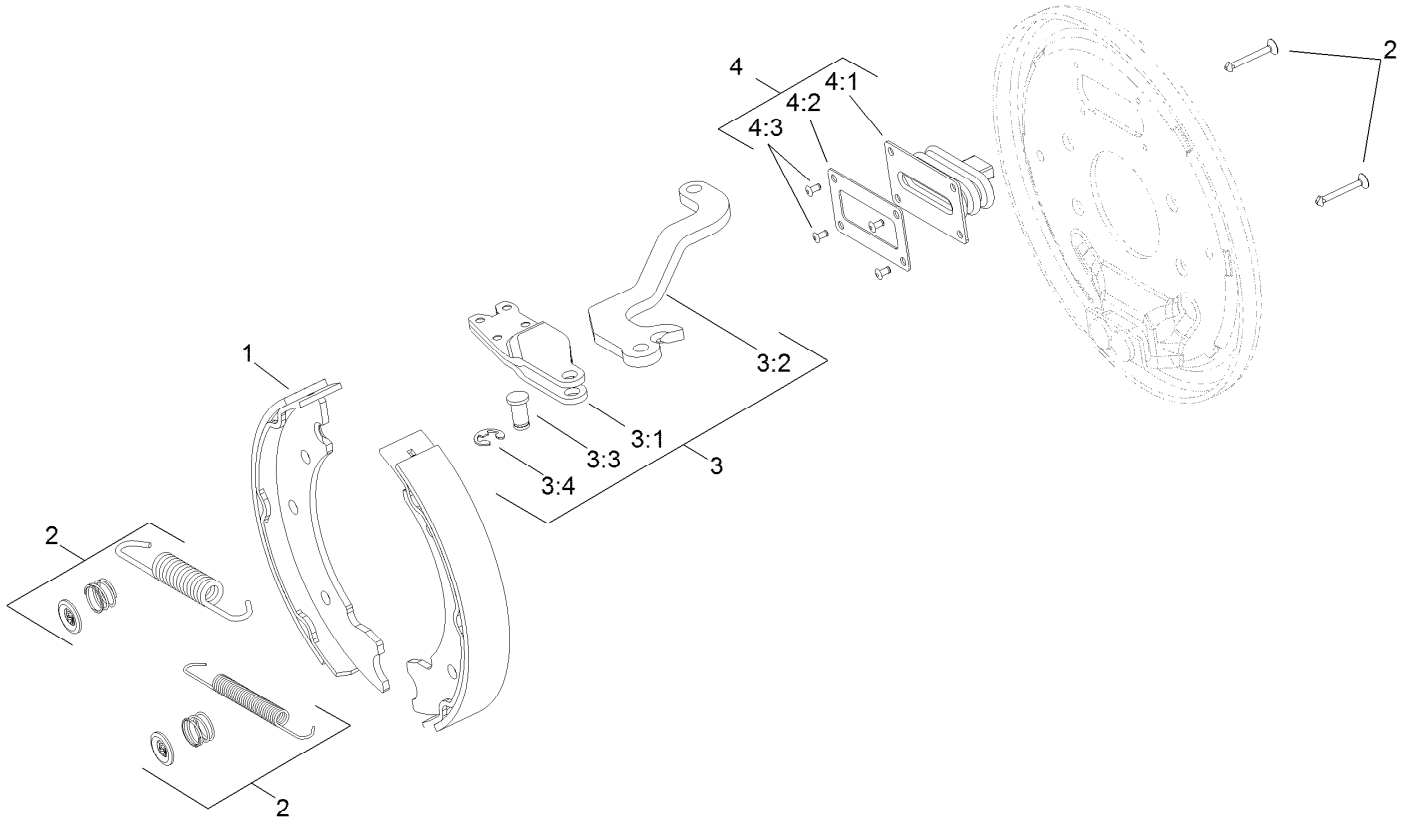

RH Brake Assembly No. 120-6260

Ref.	*Part Number*	*Qty.*	*Description*
1	108-6981	1	Brake Shoe Kit
2	108-6983	1	Brake Hardware Kit
3	110-8884	1	RH Actuator Kit
3:1		1	Housing ●
3:2		1	Lever-RH ●
3:3		1	Pin-Pivot ●
3:4		1	E-Ring ●
4	110-8885	1	Dust Boot Kit
4:1		1	Boot ●
4:2		1	Plate-Back Up ●
4:3		2	Rivet ●

● Not serviced separately

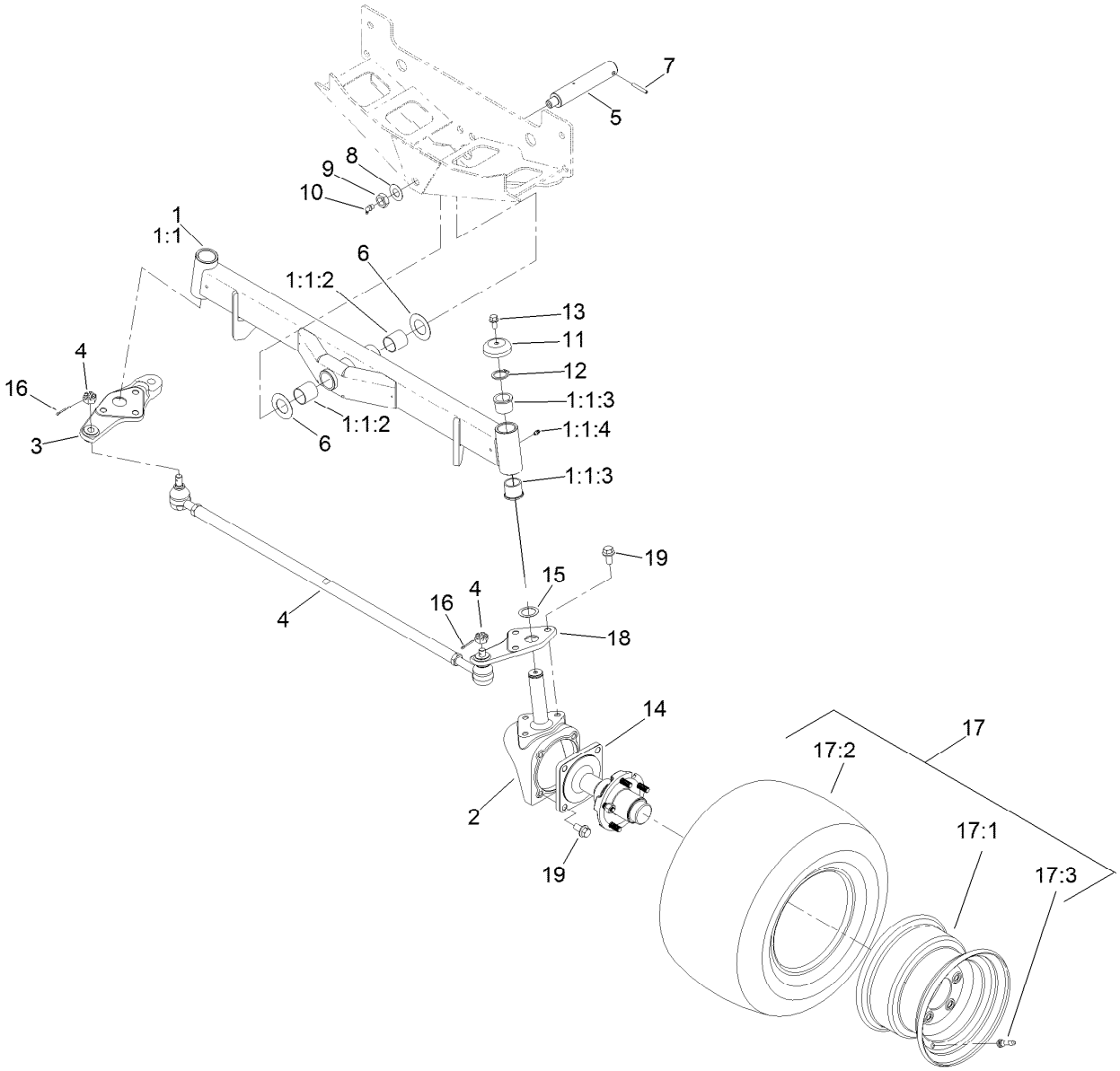

Rear Axle Assembly

Ref.	Part Number	Qty.	Description
1	107-4546-03	1	Axle ASM
1:1		1	Axle ●
1:1:2	99-6964	2	Bushing-Axle
1:1:3	104-0015	4	Bushing-Flange
1:1:4	302-5	2	Fitting-Grease
2	107-4517-03	2	Housing-Motor
3	110-5295-03	1	Link-Drag, RH
4	110-5334-03	1	Tie Rod ASM
5	98-8173	1	Pin-Pivot, Axle
6	99-8432	2	Washer-Thrust
7	32121-32	1	Pin-Roll
8	71-4540	1	Washer-Thrust
9	3296-15	1	Nut-Lock, NI

Ref.	Part Number	Qty.	Description
10	302-33	1	Fitting-Grease
11	69-8890	2	Cap-Spindle
12	32151-77	2	Ring-Retaining, External
13	3234-1	2	Screw-HHF
14	117-8961	2	Hub And Spindle ASM
15	76-2980	2	Washer-Thrust
16	3272-12	2	Pin-Cotter
17	117-0281	2	Rim And Tire ASM
17:1	117-0280	1	Rim
17:2	117-5125	1	Tire
17:3	232-27	1	Stem-Valve
18	110-5297-03	1	Link-Drag, LH
19	3234-6	14	Screw-HHF

● Not serviced separately

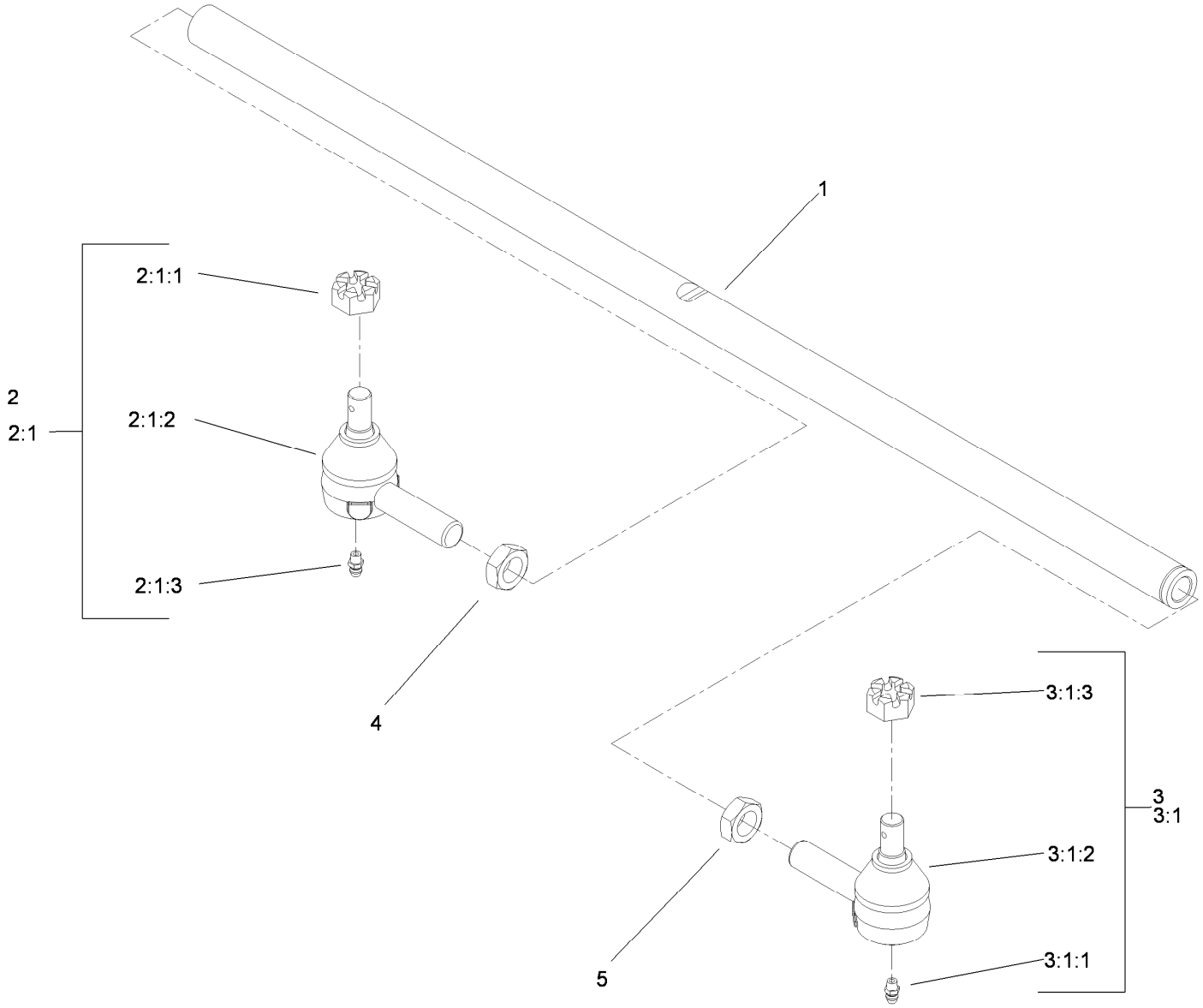

Tie Rod Assembly No. 110-5334-03

Ref.	Part Number	Qty.	Description
1	110-5335	1	Rod-Tie
2	71-4740-03	1	RH Tie Rod End ASM
2:1		1	End-Rod, Tie (RH) ■
2:1:1	105-7941	1	Nut-Hex, Slotted
2:1:2	105-7835	1	Seal
2:1:3	302-5	1	Fitting-Grease
3	2411-46-03	1	LH Tie Rod ASM
3:1		1	End-Rod, Tie (LH) ● ■
3:1:1	302-5	1	Fitting-Grease ●
3:1:2	105-7835	1	Seal ●
3:1:3	105-7941	1	Nut-Hex, Slotted ●
4	84-5300	1	Nut-Jam
5	110-5337	1	Nut-Jam

● Not illustrated

■ Not serviced separately

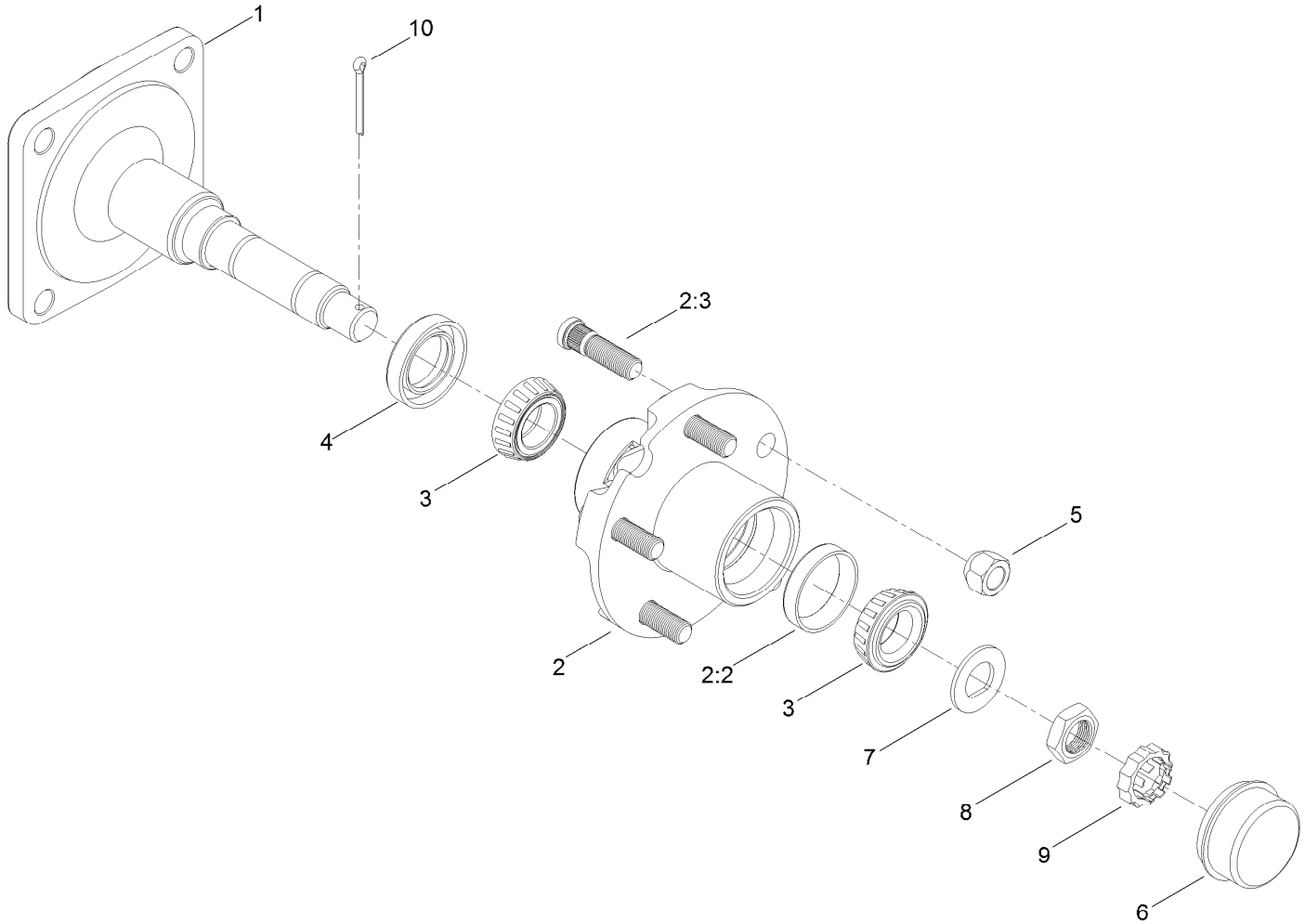

Hub and Spindle Assembly No. 117-8961

Ref.	*Part Number*	*Qty.*	*Description*
1	117-8958	1	Spindle
2	117-8963	1	Hub ASM
2:2	254-72	2	Bearing-Cup, Tapered
2:3	114-3918	5	Stud-Wheel
3	254-94	2	Bearing-Cone, Tapered
4	112-1690	1	Seal-Oil
5	242-50	5	Nut-Lug
6	241-119	1	Cap-Dust
7	117-8259	1	Washer-Spindle
8	117-8260	1	Nut
9	93-0307	1	Nut-Lock, Retainer
10	3272-18	1	Pin-Cotter

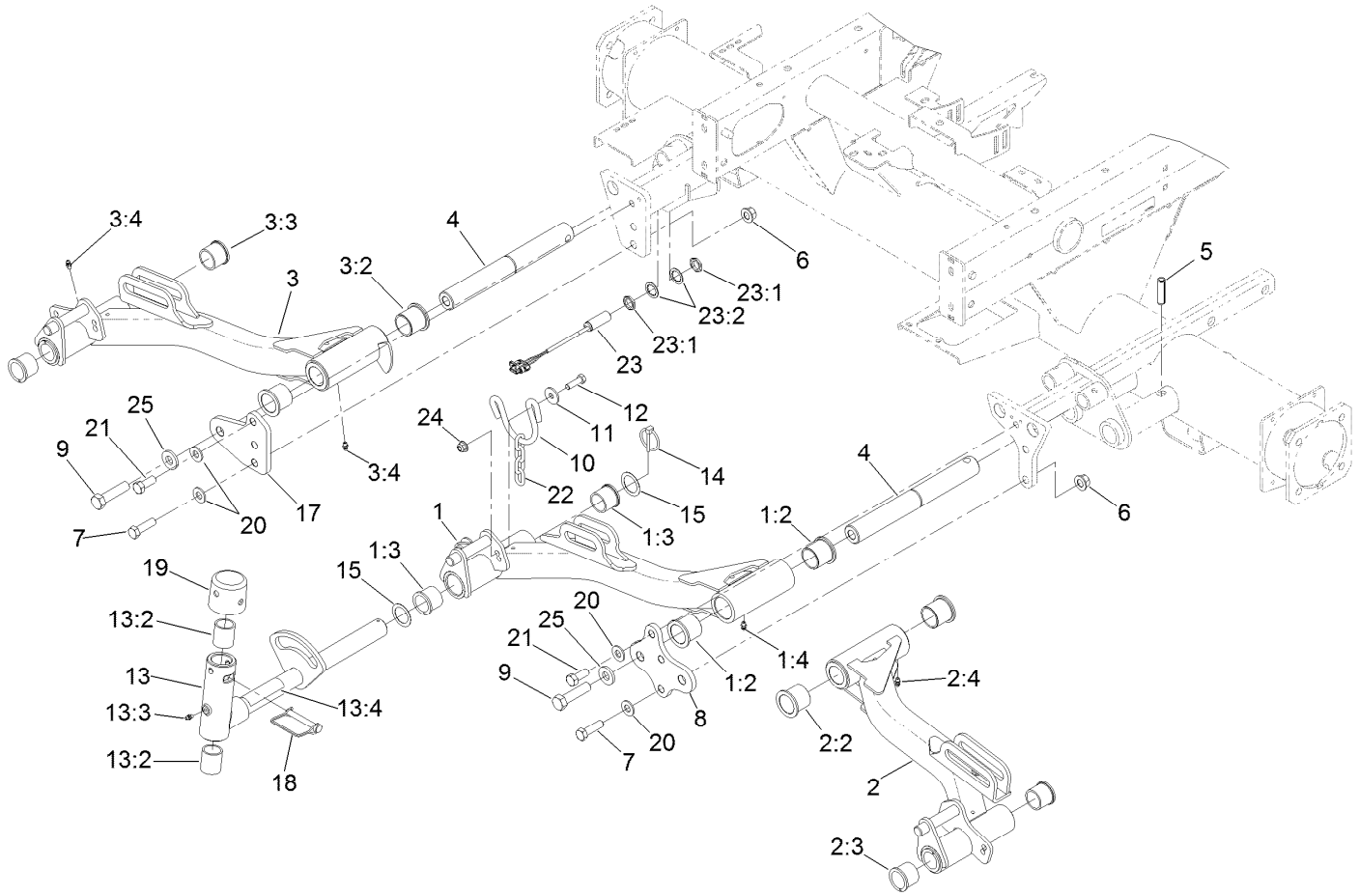

No. 1, 4 and 5 Lift Arm Assembly

Ref.	Part Number	Qty.	Description
1	136-8001	1	Lift Arm #1
1:2	69-6470	2	Bushing-Caster
1:3	104-0015	2	Bushing-Flange
1:4	302-5	2	Fitting-Grease
2	136-8004	1	Lift Arm #4
2:2	69-6470	2	Bushing-Caster
2:3	104-0015	2	Bushing-Flange
2:4	302-5	2	Fitting-Grease
3	136-8005	1	Lift Arm #5
3:2	69-6470	2	Bushing-Caster
3:3	104-0015	2	Bushing-Flange
3:4	302-5	2	Fitting-Grease
4	117-0208	3	Shaft-Pivot, Liftarm
5	32121-122	3	Pin-Roll
6	99-5107	4	Nut-Lock
7	325-7	4	Screw-HH
8	117-5154-01	1	Plate-Bridge 1 And 4
9	327-7	3	Screw-HH
10	110-0922	3	Hoop-Chain

Ref.	Part Number	Qty.	Description
11	63-8410	6	Washer
12	323-7	6	Screw-HH
13	107-2052	3	Pivot Yoke ASM
13:2	121-3187	2	Bushing
13:3	302-5	1	Fitting-Grease
13:4	110-9642	1	Decal-Warning
14	92-1298	3	Pin-Lynch
15	76-2980	6	Washer-Thrust
17	117-5153-01	1	Plate-Bridge 5
18	107-7400	3	Pin-Lynch
19	107-4027	3	Cap
20	87-7270	6	Washer-Thrust
21	325-5	2	Screw-HH
22	84-2450	3	Chain-Straight, 4-Link
23	115-5300	1	Proximity Switch ASM
23:1	117-3207	2	Nut-Hex
23:2	117-3208	2	Washer-Lock, Internal Tooth
24	104-8301	6	Nut-HF, NI
25	99-7667	3	Washer-Flat

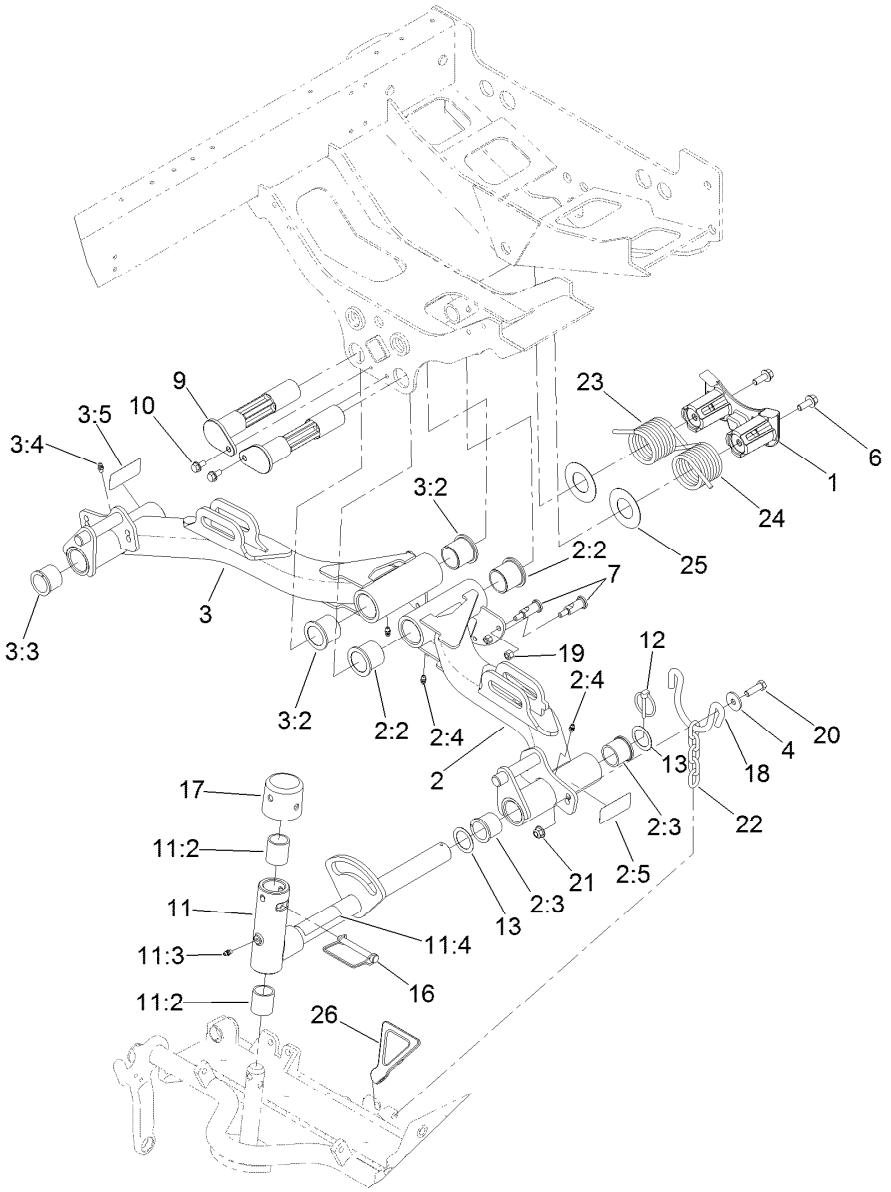

No. 2 and 3 Lift Arm Assembly

Ref.	Part Number	Qty.	Description
1	125-2018	1	Housing
2	136-8002	1	Lift Arm #2
2:2	69-6470	2	Bushing-Caster
2:3	104-0015	2	Bushing-Flange
2:4	302-5	2	Fitting-Grease
2:5	93-6696	1	Decal-Warning
3	136-8003	1	Lift Arm #3
3:2	69-6470	2	Bushing-Caster
3:3	104-0015	2	Bushing-Flange
3:4	302-5	2	Fitting-Grease
3:5	93-6696	1	Decal-Warning
4	63-8410	4	Washer
6	3234-11	2	Screw-HHF
7	120-6283	6	Stud-Shouldered
9	125-2037	2	Shaft
10	32144-14	2	Screw-HWHTF
11	107-2052	2	Pivot Yoke ASM

Ref.	Part Number	Qty.	Description
11:2	121-3187	2	Bushing
11:3	302-5	1	Fitting-Grease
11:4	110-9642	1	Decal-Warning
12	92-1298	2	Pin-Lynch
13	76-2980	4	Washer-Thrust
16	107-7400	2	Pin-Lynch
17	107-4027	2	Cap
18	110-0922	2	Hoop-Chain
19	3296-29	6	Nut-Lock, NI
20	323-7	4	Screw-HH
21	104-8301	4	Nut-HF, NI
22	84-2450	2	Chain-Straight, 4-Link
23	99-5608-03	1	Spring-Torsion, RH
24	99-5609-03	1	Spring-Torsion, LH
25	110-5345	2	Washer
26	119-8010-03	1	Kickstand

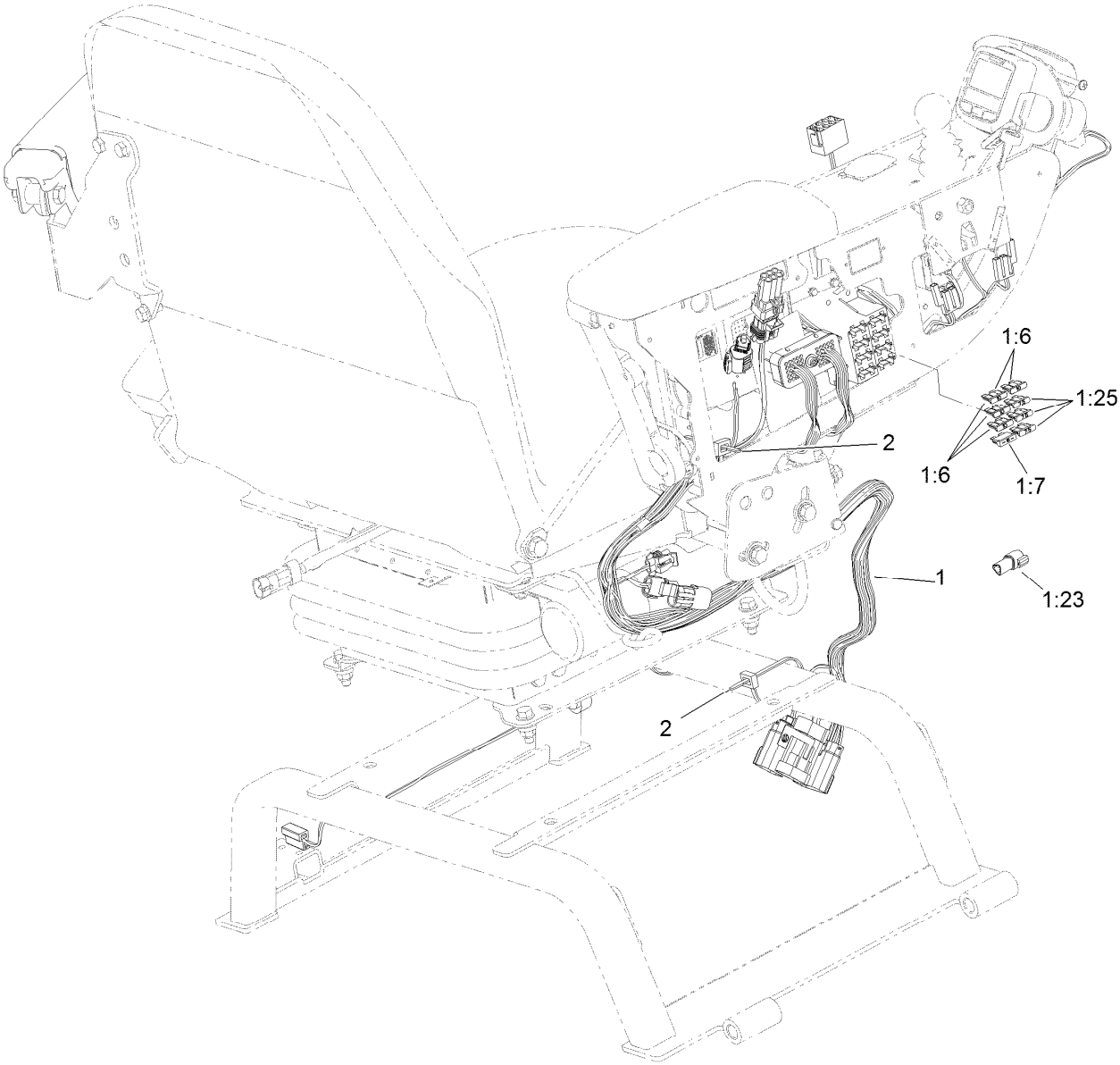

Seat and Control Arm Wiring Harness Assembly

Ref.	*Part Number*	*Qty.*	*Description*
1	115-8081	1	Harness-Wire, Seat
1:6	218-578	3	Fuse-Blade, 10 Amp
1:7	109355	1	Fuse-Blade, 15 Amp
1:23	32180-043	1	Resistor-120 Ohm
1:25	114241	3	Fuse-Blade, 7.5 Amp
2	3290-378	3	Tie-Cable

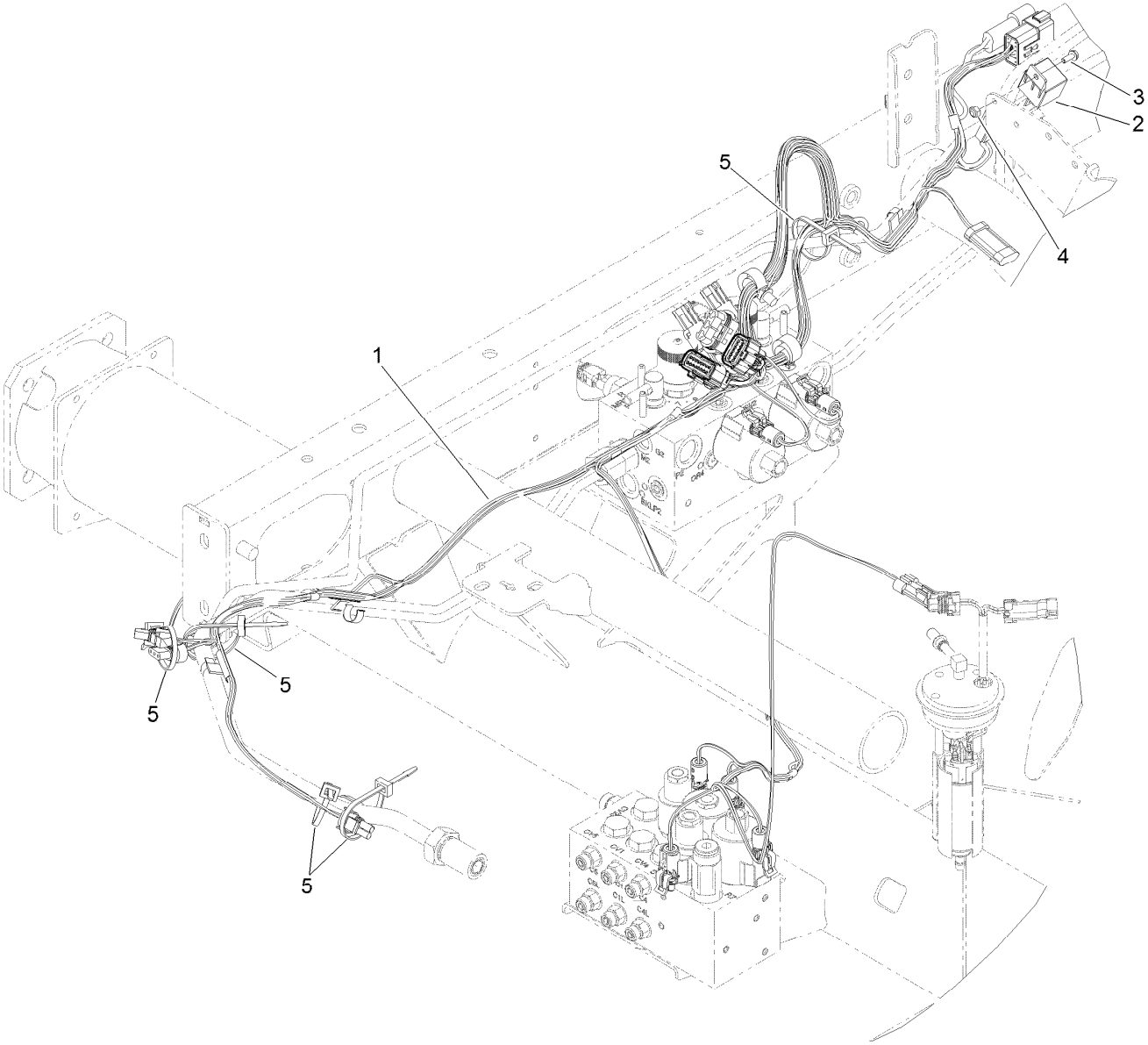

Main Wiring Harness Assembly

Ref.	*Part Number*	*Qty.*	*Description*
1	120-6356	1	Harness-Wire, Main
2	99-7435	1	Relay
3	3290-321	1	Screw-HWH
4	3296-2	1	Nut-Lock, NI
5	3290-378	10	Tie-Cable

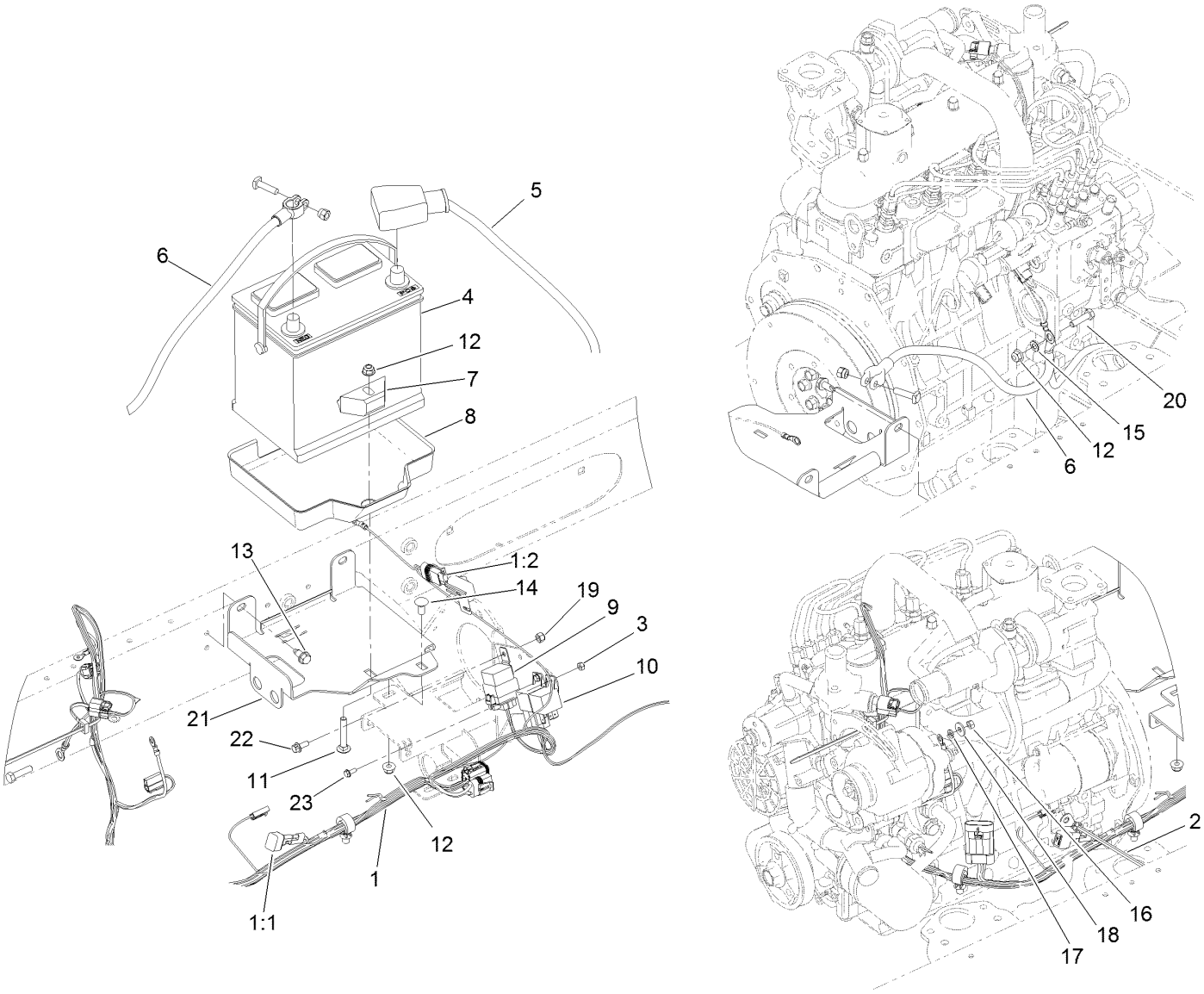

Battery Mounting Assembly

Ref.	Part Number	Qty.	Description
1	120-6346	1	Harness-Wire, Row Engine
1:1	100-4918	1	Diode
1:2	94-6710	1	Fuse-2 Amp
2	99-3441	1	Harness-Wire, Fusible Link
3	3296-2	1	Nut-Lock, NI
4	104-9979	1	Battery
5	108-1802	1	Cable-Battery, Positive
6	110-8813	1	Cable-Battery, Negative
7	66-2490	1	Retainer-Battery
8	99-3513	1	Tray-Battery
9	99-7430	1	Relay-Mini
10	99-7435	1	Relay
11	3230-6	1	Bolt-CARR

Ref.	Part Number	Qty.	Description
12	104-8300	4	Nut-HF, NI
13	32104-32	2	Screw-HWH
14	3230-1	1	Bolt-CARR
15	3255-8	1	Washer-Lock
16	48-7890	1	Nut-Hex
17	43-5930	1	Washer-Lock, Spring
18	3256-78	1	Washer-Flat
19	3296-42	1	Nut-Lock, NI
20	322-6	1	Screw-HH
21	110-0907-01	1	Bracket-Battery
22	3234-33	1	Screw-HHF
23	3290-321	1	Screw-HWH

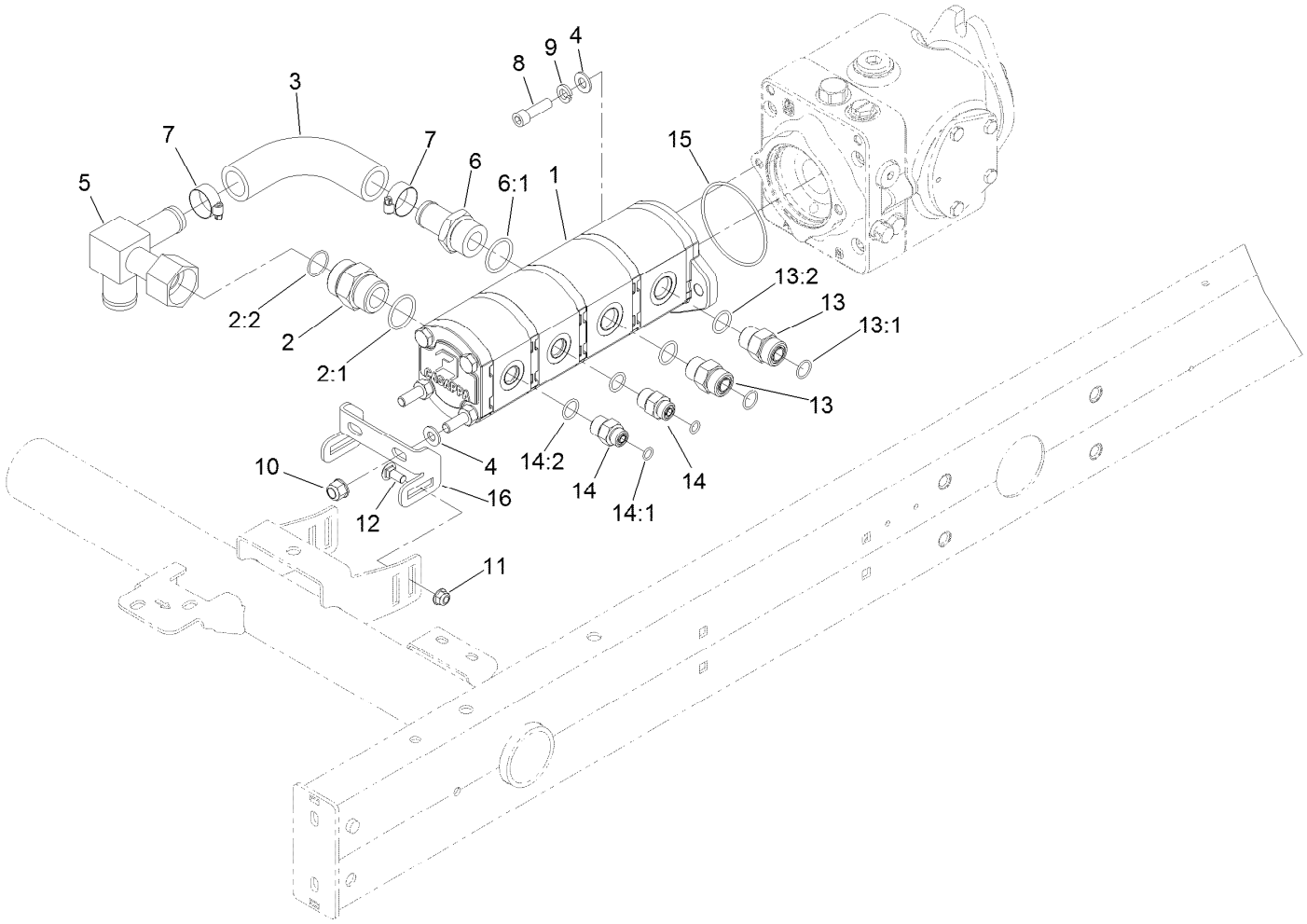

Gear Pump Mounting Assembly

Ref.	Part Number	Qty.	Description
1	105-7576	1	Gear Pump ASM
2	104-3797	1	Fitting-Straight
2:1	237-146	1	O-Ring
2:2	340-65	1	O-Ring
3	108-1683	1	Hose-Formed
4	3256-24	4	Washer-Flat
5	108-1672	1	Manifold-Tube
6	354-78	1	Fitting-STR
6:1	237-146	1	O-Ring
7	2412-34	2	Clamp-Hose
8	3274-1	2	Screw-HSH
9	3253-5	2	Washer-Lock

Ref.	Part Number	Qty.	Description
10	103-9511	2	Nut-Lock, NI
11	104-8300	2	Nut-HF, NI
12	3230-1	2	Bolt-CARR
13	340-7	2	Fitting-Straight
13:1	237-65	1	O-Ring
13:2	237-80	1	O-Ring
14	340-3	2	Fitting-Straight
14:1	237-22	1	O-Ring
14:2	237-79	1	O-Ring
15	237-161	1	O-Ring
16	108-1801-01	1	Bracket-Support, Pump

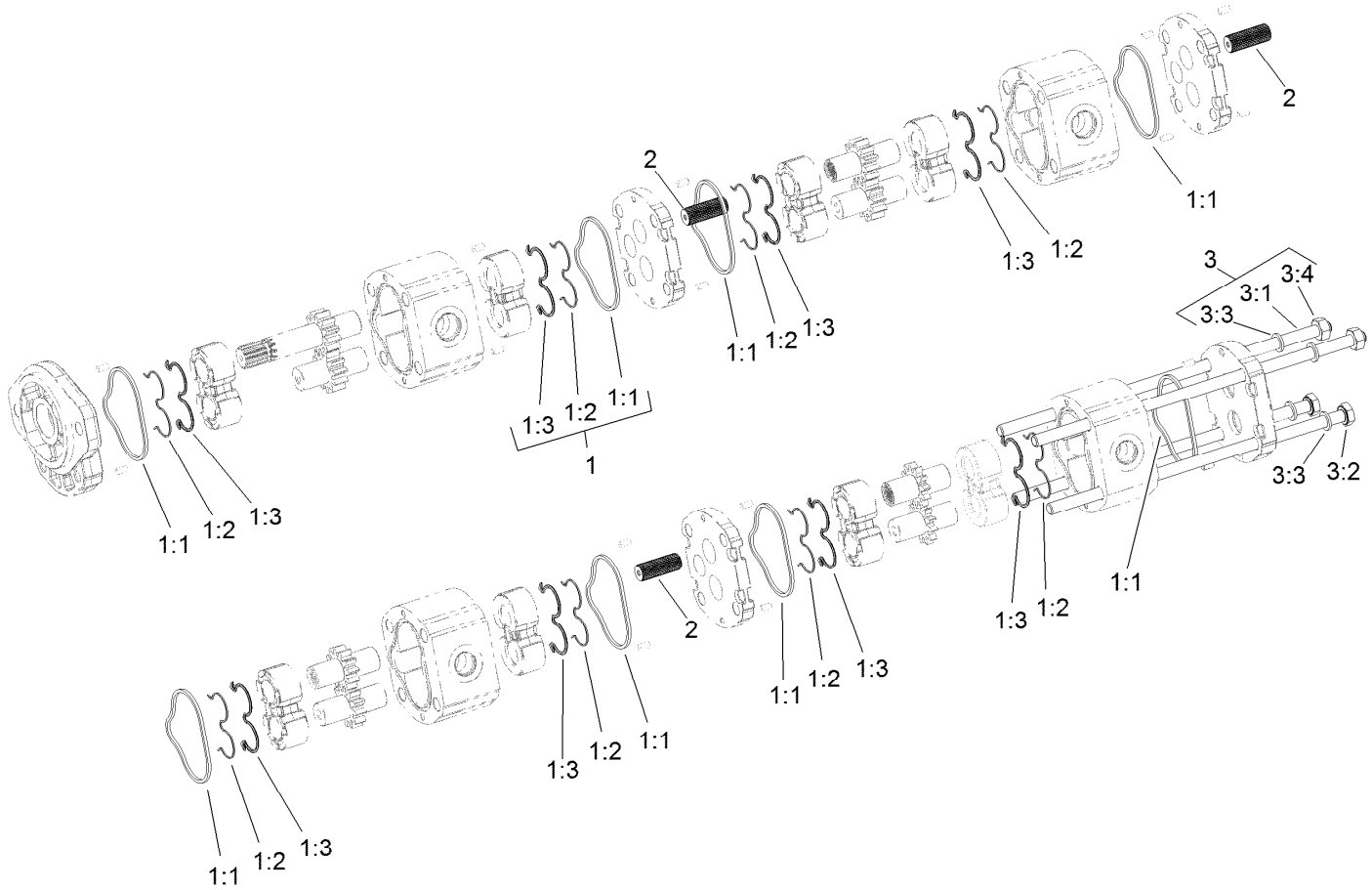

Gear Pump Assembly No. 105-7576

Ref.	*Part Number*	*Qty.*	*Description*
1	108-4595	1	Seal Kit
1:1		8	Seal ●
1:2		8	Seal ●
1:3		8	Ring-Back Up ●
2	120-6284	3	Hub-Connecting
3	125-8759	1	Kit-Bolt
3:1		2	Bolt-Stud ●
3:2		2	Screw ●
3:3		4	Washer ●
3:4		2	Nut ●

● Not serviced separately

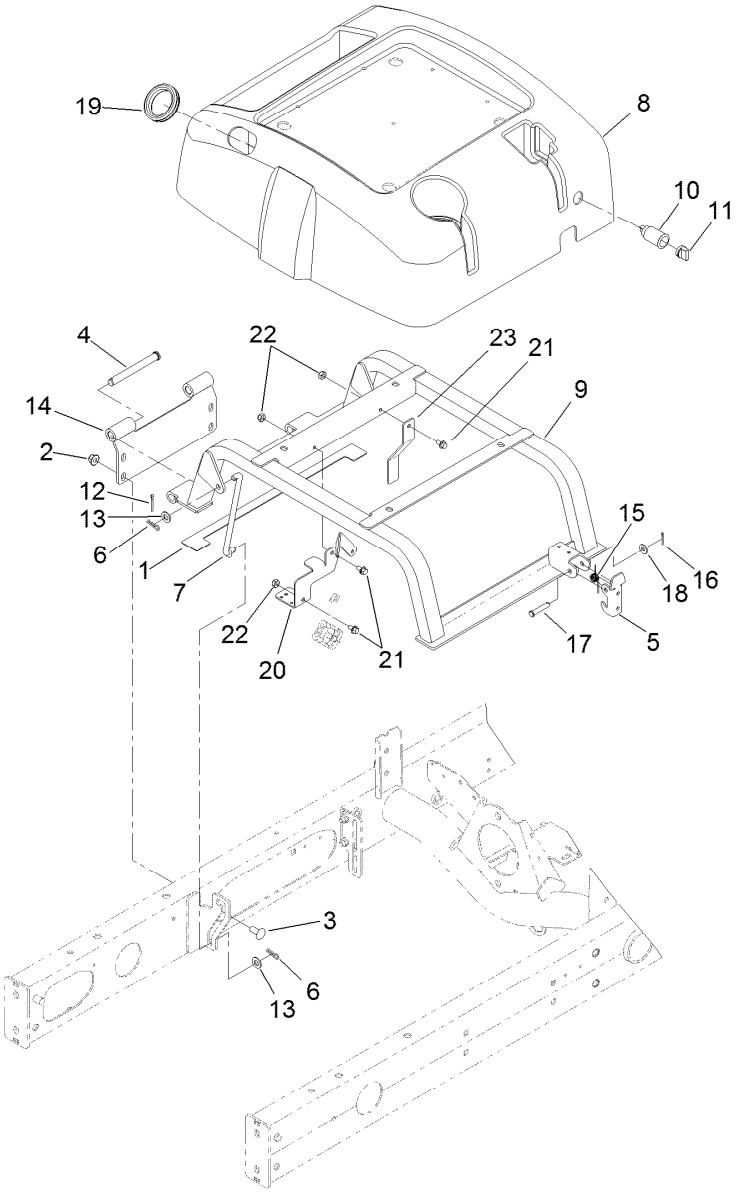

Seat Base Assembly

Ref.	Part Number	Qty.	Description
1	110-5255	2	Bumper-Base, Seat
2	104-8301	4	Nut-HF, NI
3	3231-27	4	Screw-CARR
4	283-83	2	Pin-Clevis
5	110-8971	1	Latch
6	3290-307	4	Pin-Cotter
7	98-0917	2	Rod-Prop
8	108-1757	1	Cover-Seatbase
9	125-2122-03	1	Seat Base ASM
10	99-7411	1	Point-Power
11	99-7416	1	Cap
12	3272-11	2	Pin-Cotter
13	3256-24	4	Washer-Flat
14	125-2121-03	1	Hinge-Seatbase
15	104-4821	1	Spring-Torsion
16	3272-6	1	Pin-Cotter
17	94-3829	1	Pin-Clevis
18	3256-2	1	Washer-Flat
19	240-12	1	Grommet-Rubber
20	127-2711-03	1	Bracket-Harness
21	3234-13	3	Screw-HHF
22	3296-16	3	Nut-Lock, NI
23	127-2615-03	1	Bracket-Harness, Wire

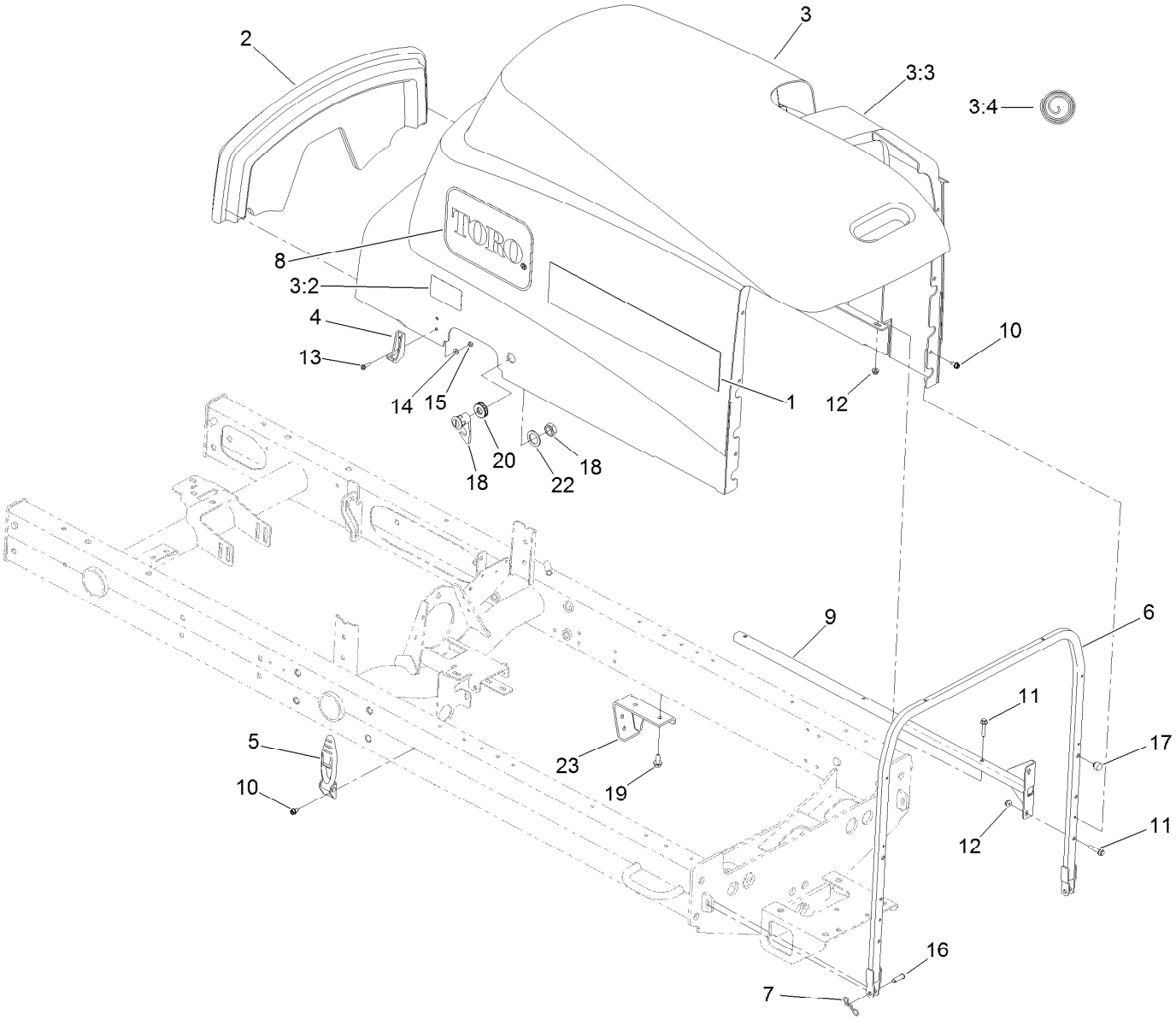

Hood Assembly

Ref.	Part Number	Qty.	Description
1	110-0963	2	Decal
2	108-7587	1	Saddle-Hood
3	110-8994	1	Hood ASM
3:2	106-6754	1	Decal-Danger
3:3	110-5252	1	Foam-Sealed
3:4	110-9002	1	Foil Tape Kit
4	103-2897	2	Latch-Catch
5	103-2898	2	Latch-Rubber
6	125-8819-03	1	Tube-Frame, Hood
7	105-7512	2	Pin-Tie, Bow
8	66-6140	2	Decal
9	108-1790-03	2	Tube
10	32104-17	8	Screw-HWH

Ref.	Part Number	Qty.	Description
11	3234-21	10	Screw-HHF
12	104-7201	10	Nut-HF, NI
13	32105-13	4	Screw-HWH
14	3256-14	4	Washer-Flat
15	3296-12	4	Nut-Lock, NI
16	283-61	2	Pin-Yoke
17	107-8042	2	Bumper-Rubber
18	98-5398	1	Latch
19	32104-32	4	Screw-HWH
20	104-1453	1	Grommet
22	99-4958	1	Spacer
23	110-0979-03	2	Bracket-Deflector

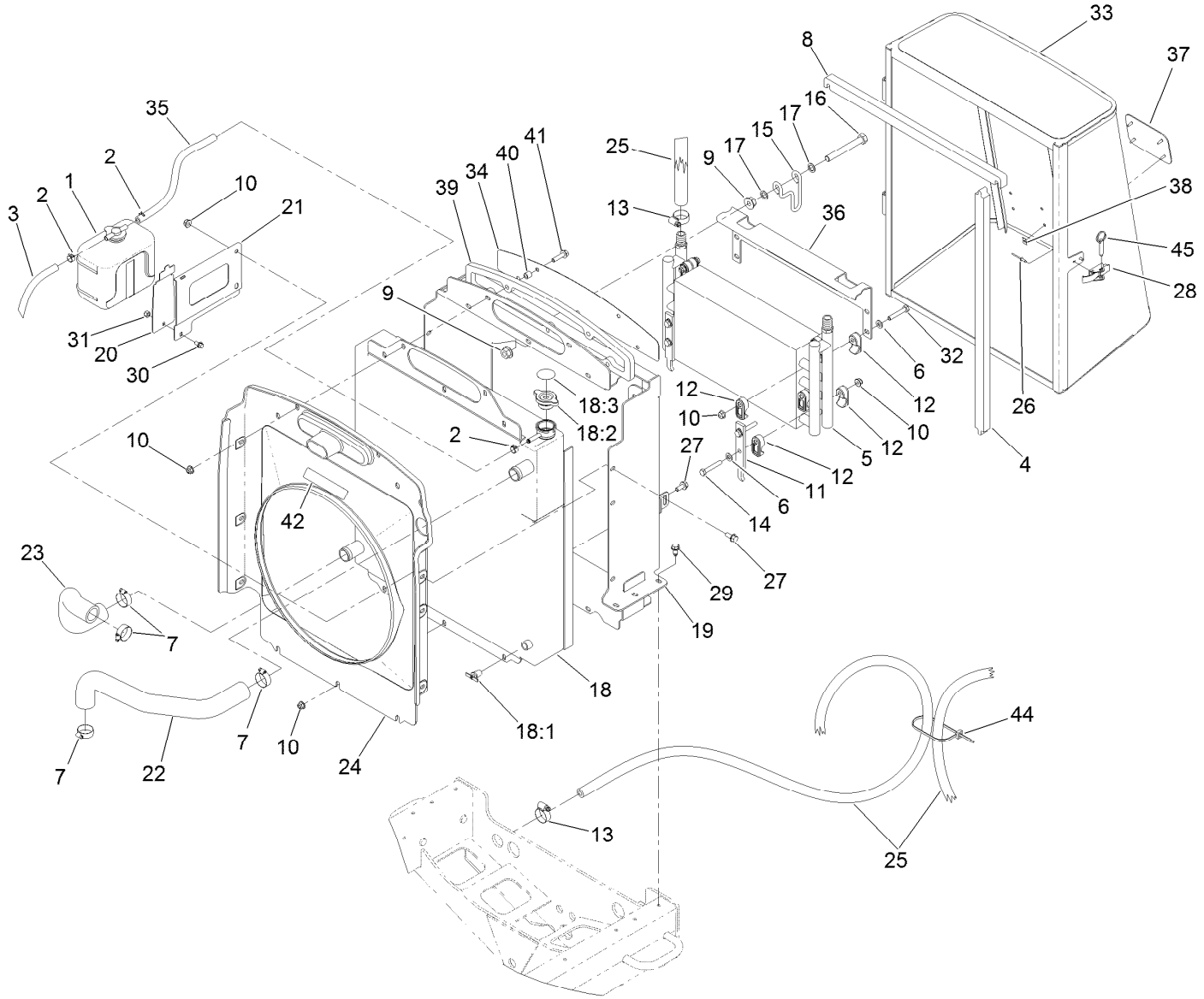

Cooling System Assembly

Ref.	Part Number	Qty.	Description
1	108-0638	1	Bottle-Overflow
2	92-2379	3	Clamp-Hose
3	110-3257	1	Hose-Fuel
4	110-0967	2	Seal-Foam
5	100-4869	1	Cooler-Oil
6	3256-23	8	Washer-Plain
7	2412-34	4	Clamp-Hose
8	110-0968	2	Seal-Foam
9	32128-49	4	Nut-HHF
10	104-8300	22	Nut-HF, NI
11	104-5460-03	2	Plate-Mount, Oil Cooler
12	105-3943	16	Clamp-Cooler, Oil
13	2412-129	4	Clamp-Hose
14	322-10	4	Screw-HH
15	104-5429	2	Clamp-Form, Wire
16	325-17	2	Screw-HH
17	41-8440	4	Washer
18	119-6956	1	Radiator ASM
18:1	304-46	1	Draincock
18:2	93-5957	1	Cap-Radiator
18:3	106-6755	1	Decal-Cap, Radiator

Ref.	Part Number	Qty.	Description
19	127-2665-03	1	Frame-Support, Radiator
20	108-1665-03	1	Bracket-Reservior
21	108-1666-03	1	Bracket-Reservoir
22	108-1696	1	Hose-Formed
23	108-1697	1	Hose-Formed
24	108-1791	1	Shroud-Fan
25	108-1693	2	Hose
26	3269-15	2	Rivet-Pop
27	3234-5	9	Screw-HHF
28	115-1554	1	Latch-Draw
29	32104-32	6	Screw-HWH
30	3234-13	1	Screw-HHF
31	3296-42	1	Nut-Lock, NI
32	322-21	4	Screw-HH
33	110-0952-03	1	Screen ASM
34	108-1843-03	1	Screen-Intake, Air
35	110-4104	1	Hose-Fuel
36	107-2043-03	1	Bracket-Oil Cooler, Top
37	93-6028	1	Plate-Logo
38	94-2638	4	Nut-Flat
39	110-5324	1	Seal-Foam

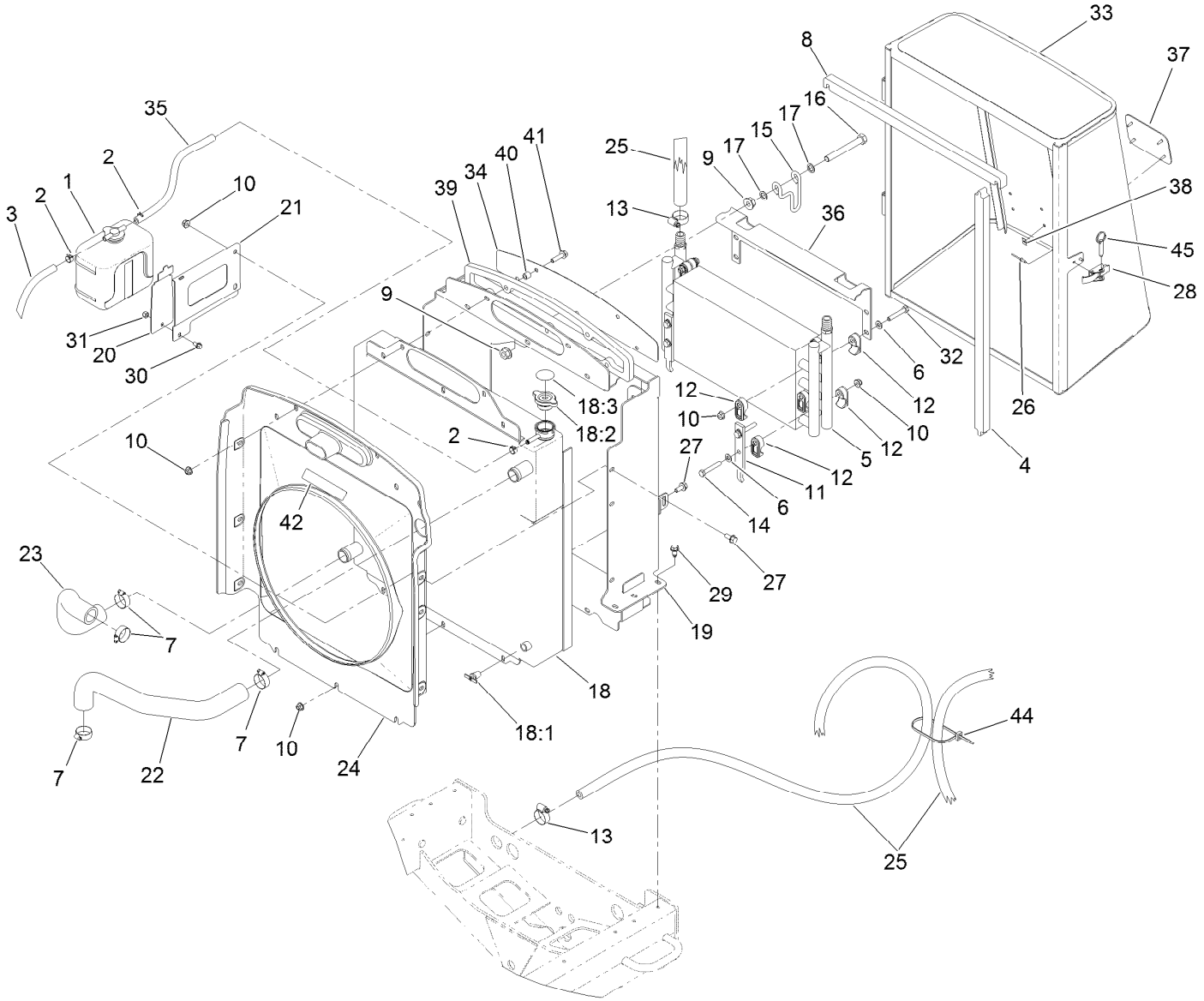

Cooling System Assembly (continued)

Ref.	Part Number	Qty.	Description
40	1-603903	5	Spacer
41	3234-36	5	Screw-HHF
42	93-7272	1	Decal-Warning

Ref.	Part Number	Qty.	Description
44	3290-378	1	Tie-Cable
45	115-1556	1	Pin-Ball, Detent

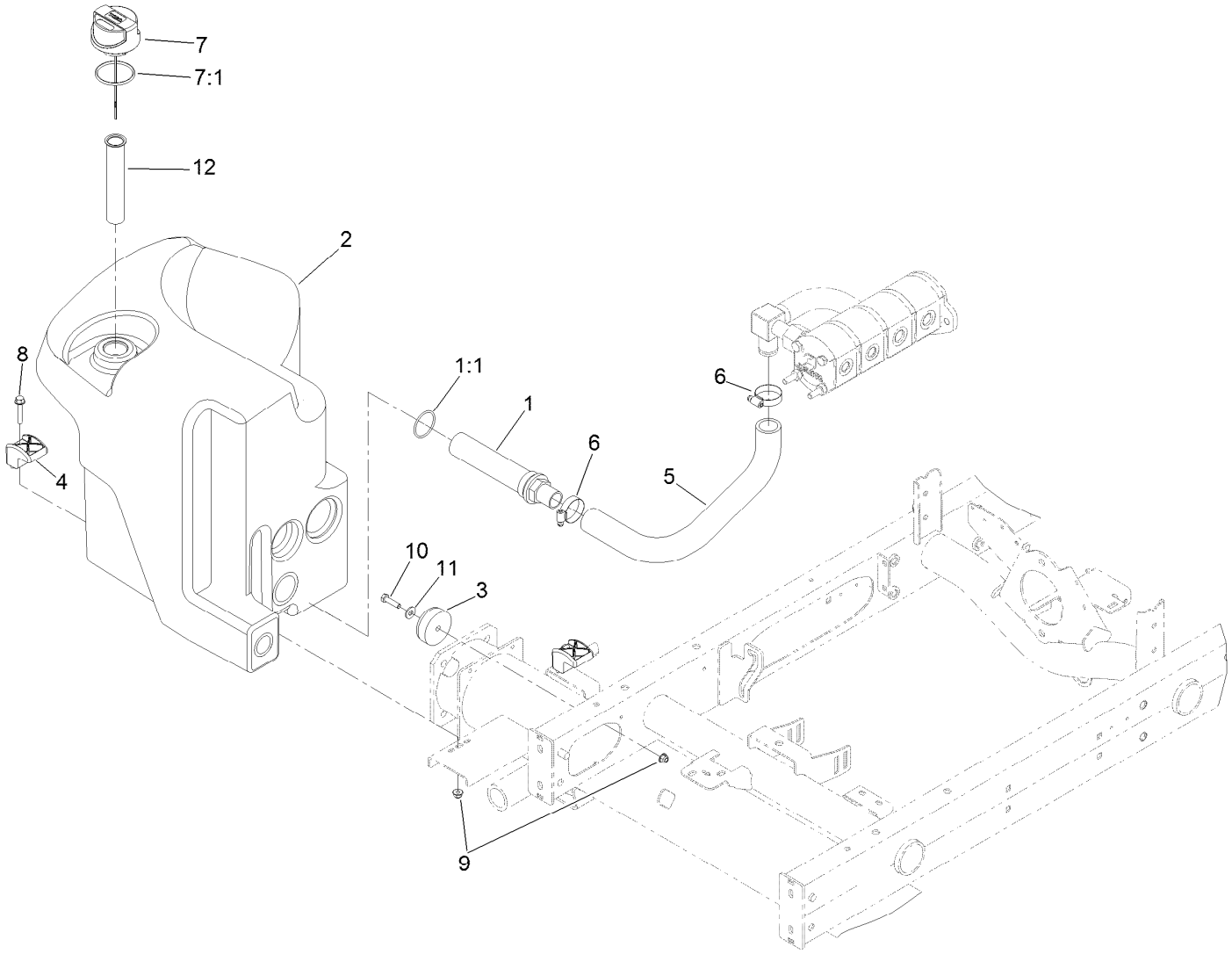

Hydraulic Tank Assembly

Ref.	Part Number	Qty.	Description
1	105-0131	1	Strainer-Tank, Oil
1:1	340-136	1	O-Ring
2	121-5587	1	Tank-Hydraulic
3	108-1605	1	Bumper-Recess
4	107-4543	2	Clamp
5	108-1685	1	Hose-Formed
6	2412-3	2	Clamp-Hose
7	117-0193	1	Cap-Hydraulic, Vented Breather
7:1	237-101	1	O-Ring
8	94-5780	2	Screw-HWH
9	104-8300	3	Nut-HF, NI
10	322-6	1	Screw-HH
11	3256-3	1	Washer-Flat
12	61-2790	1	Filter-Screen

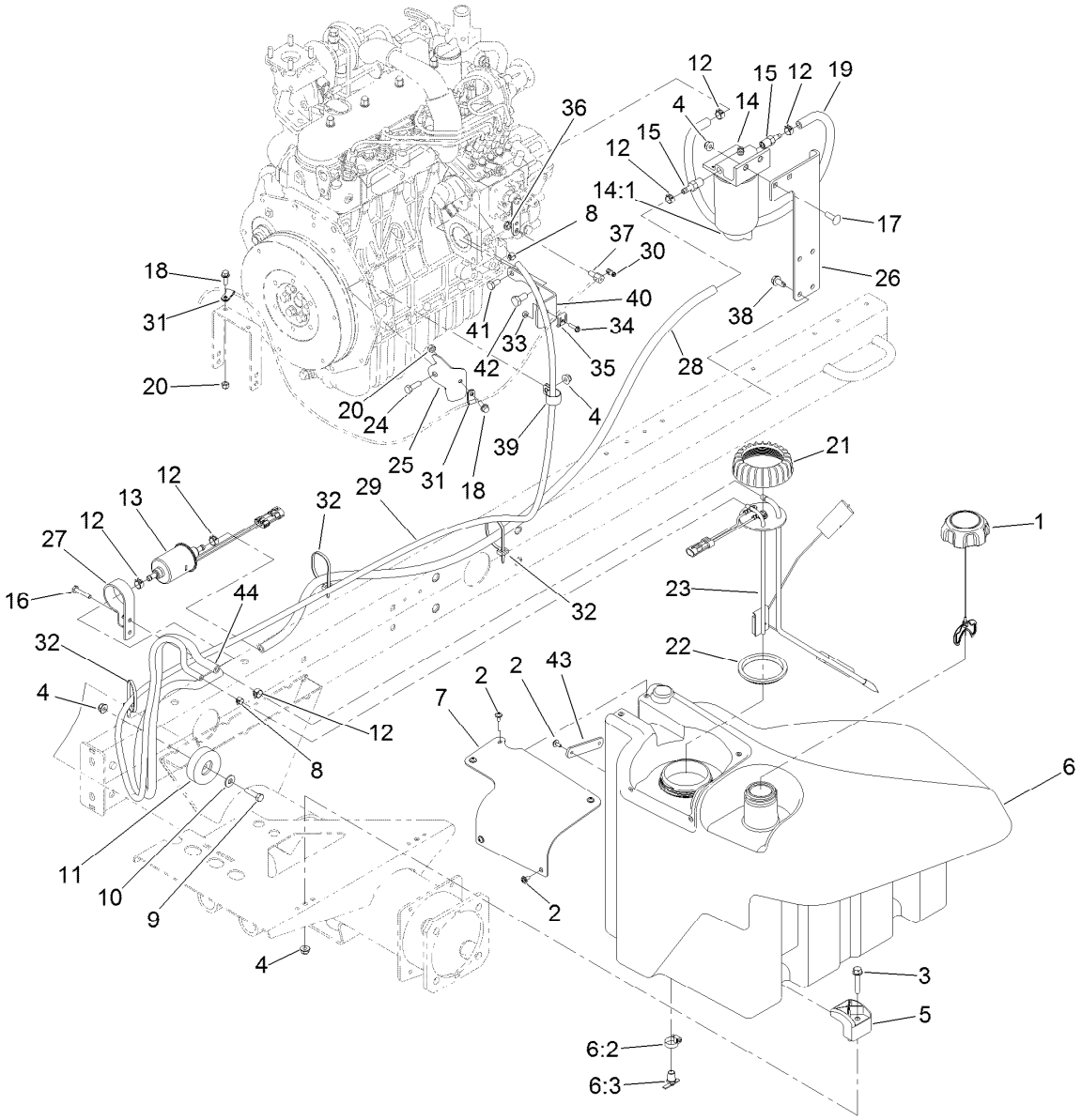

Fuel System Assembly

Ref.	Part Number	Qty.	Description
1	117-5894	1	Fuel Cap ASM
2	109-2661	7	Screw-PPH
3	94-5780	2	Screw-HWH
4	104-8300	6	Nut-HF, NI
5	107-4543	2	Clamp
6	125-2907	1	Fuel Tank ASM
6:2	2412-36	1	Clamp-Hose
6:3	304-46	1	Draincock
7	125-2903	1	Cover-Pump/Sender
8	2412-80	2	Clamp-Hose
9	322-6	1	Screw-HH
10	3256-3	1	Washer-Flat
11	108-1605	1	Bumper-Recess
12	92-2379	6	Clamp-Hose
13	110-8806	1	Pump-Fuel
14	110-9044	1	Separator-Filter
14:1	110-9049	1	Filter-Spin On, Fuel/Water
15	353-783	2	Fitting-STR
16	32104-96	1	Screw-HH
17	3230-22	2	Screw-CARR
18	3234-4	2	Screw-HHF

Ref.	Part Number	Qty.	Description
19	109-0309	1	Hose-Fuel
20	3296-42	2	Nut-Lock, NI
21	115-2162	1	Cap-Pump, Fuel
22	115-2163	1	Gasket-Pump, Fuel
23	121-5642	1	Sender-Fuel
24	322-5	1	Screw-HH
25	110-9007-03	1	Support-Cable, Throttle
26	110-8968-01	1	Mount-Separator, Water
27	110-8817	1	Bracket-Pump, Fuel
28	110-3259	1	Hose-Fuel
29	125-8808	1	Hose-Fuel
30	112-9919	1	Stop-Cable, Throttle
31	2412-149	2	Clamp-R
32	3290-378	5	Tie-Cable
33	3296-2	1	Nut-Lock, NI
34	32105-13	1	Screw-HWH
35	81-1690	1	Clamp-Cable
36	3296-20	1	Nut-Lock, NI
37	98-9311	1	Swivel-Throttle
38	32104-32	4	Screw-HWH
39	2412-41	1	Clamp-R

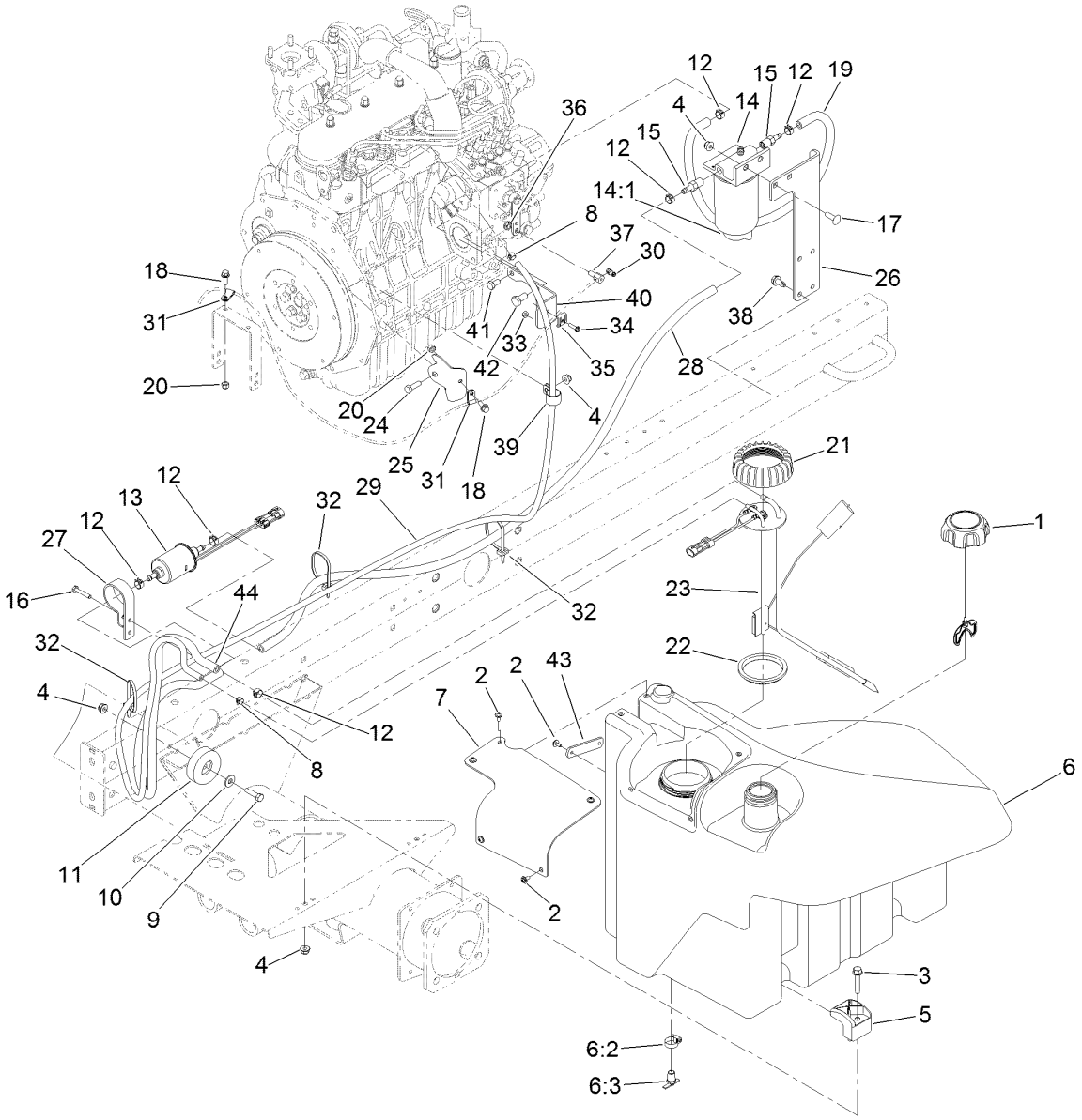

Fuel System Assembly (continued)

Ref.	Part Number	Qty.	Description
40	110-9009-03	1	Bracket-Cable, Throttle
41	33114-016	1	Screw-HH
42	63-7790	1	Screw-Cap

Ref.	Part Number	Qty.	Description
43	125-2945	1	Strap-Cable
44	110-3258	1	Hose-Fuel

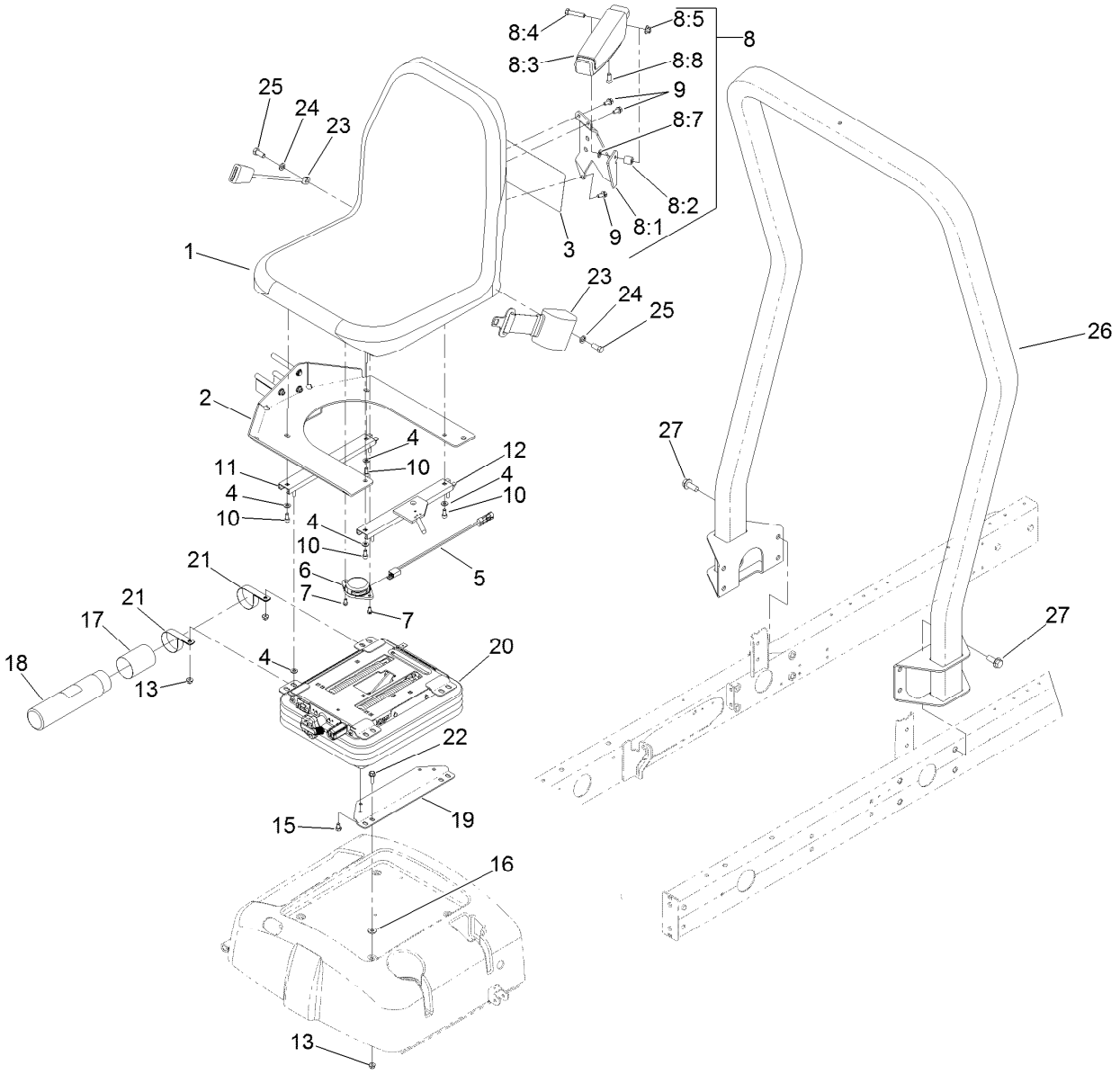

Seat Mounting Assembly

Ref.	Part Number	Qty.	Description
1	104-4620	1	Seat
2	125-2900-03	1	Mount-Seat
3	125-8753	1	Decal-Service
3	125-8798	1	Decal-Service, Japanese
4	3256-23	8	Washer-Plain
5	108-8657	1	Harness-Wire, Seat
6	92-6282	1	Switch-Seat
7	9266714	2	Screw-HWH
8	92-7307	1	LH Armrest ASM
8:1	69-0760	1	Bracket-Arm, LH
8:2	92-7301	1	Spacer
8:3	69-1180	1	Armrest
8:4	323-9	1	Screw-HH
8:5	32128-19	1	Nut-HF Lock,Large Flg
8:7	3256-24	1	Washer-Flat
8:8	92-7318	1	Screw
9	3234-14	3	Screw-HHF
10	3274-12	4	Screw-HSH

Ref.	Part Number	Qty.	Description
11	92-8990	1	Adjuster-Seat, Non-Locking
12	92-8991	1	Adjuster (W/Latch)
13	104-8300	8	Nut-HF, NI
15	48-7680	4	Screw-HH
16	71-9310	4	Spacer
17	104-7048	1	Cap-Housing
18	104-7050	1	Tube-Manual
19	108-6590-03	2	Bracket-Seat, Lower
20	110-8851	1	Mechanical Suspension ASM
21	2412-133	2	Clamp-R
22	3234-17	4	Screw-HHF
23	100-4928	1	Belt-Seat
24	3253-6	2	Washer-Lock
25	3212-4	2	Screw-HH
26	136-7954	1	ROPS ASM
27	3234-38	8	Screw-HHF

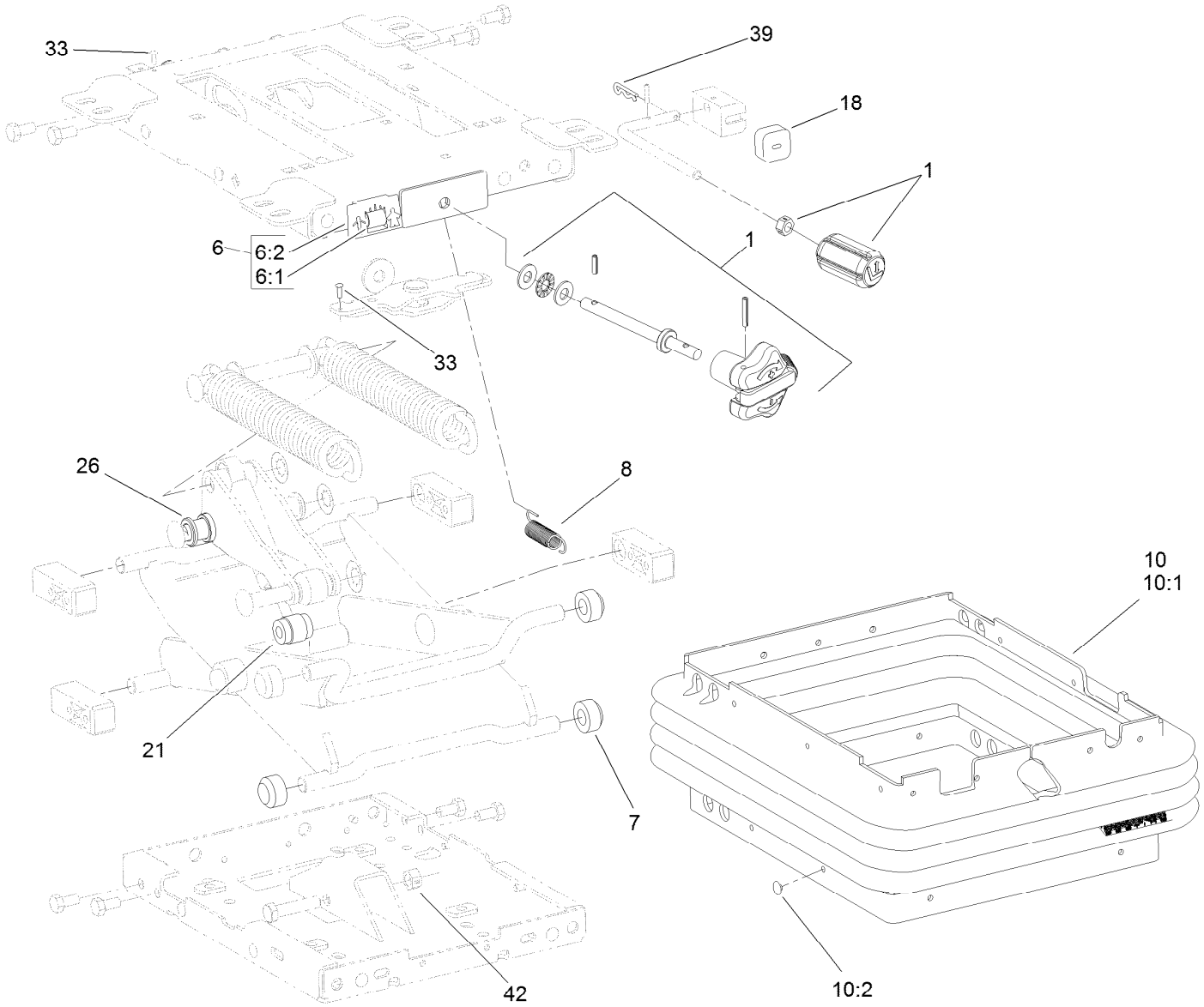

Mechanical Seat Suspension Assembly No. 110-8851

Ref.	*Part Number*	*Qty.*	*Description*
1	119-8040	1	Knobs Service Kit
6	108-4584	1	Weight Indicator Service Kit
6:1		1	Tape-Weight Adjust ●
6:2		1	Guide-Weight Adjust ●
7	108-9632	4	Roller
8	108-9633	1	Spring-Extension
10	112-0164	1	Boot Kit
10:1		1	Boot-Suspension ●
10:2	108-9641	21	Clip-Plug
18	108-9634	1	Bumper
21	108-9614	1	Damper
26	108-9622	2	Tube
33	3290-54	2	Rivet-Blind
39	3272-9	1	Pin-Cotter
42	32152-2	1	Nut-Lock, Cone

● Not serviced separately

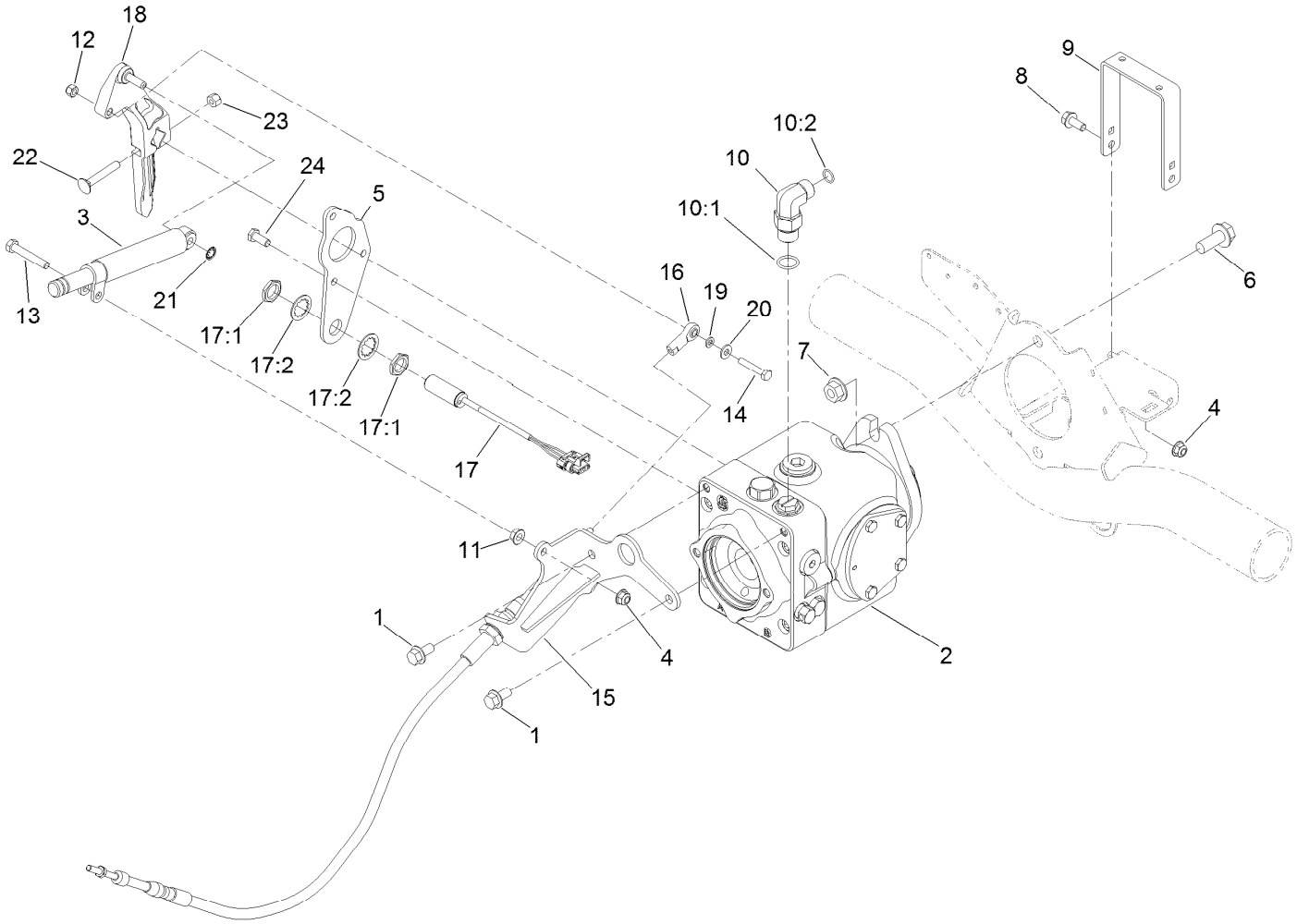

Traction Pump Mounting Assembly

Ref.	Part Number	Qty.	Description
1	3234-1	2	Screw-HHF
2	119-6972	1	Variable Hydraulic Pump ASM
3	76-8870	1	Damper-Lever
4	104-8300	3	Nut-HF, NI
5	125-8822-03	1	Plate-Pump
6	3234-38	2	Screw-HHF
7	32128-49	2	Nut-HHF
8	3234-5	2	Screw-HHF
9	108-1799-03	1	Hoop-Guard
10	340-105	1	Fitting-Elbow, 90 DEG
10:1	237-80	1	O-Ring
10:2	237-30	1	O-Ring
11	32128-20	1	Nut-HF
12	3296-42	1	Nut-Lock, NI

Ref.	Part Number	Qty.	Description
13	322-10	1	Screw-HH
14	321-9	1	Screw-HH
15	127-2356-03	1	Bracket-Cable
16	2411-41	1	Rod End-Ball Joint
17	115-5300	1	Proximity Switch ASM
17:1	117-3207	2	Nut-Hex
17:2	117-3208	2	Washer-Lock, Internal Tooth
18	117-0265	1	Lever-Pump
19	33093-00	1	Washer-Flat
20	3256-22	1	Washer-Flat
21	32151-72	1	Ring-Retaining
22	3230-6	1	Bolt-CARR
23	3296-29	1	Nut-Lock, NI
24	33114-020	3	Screw-HH

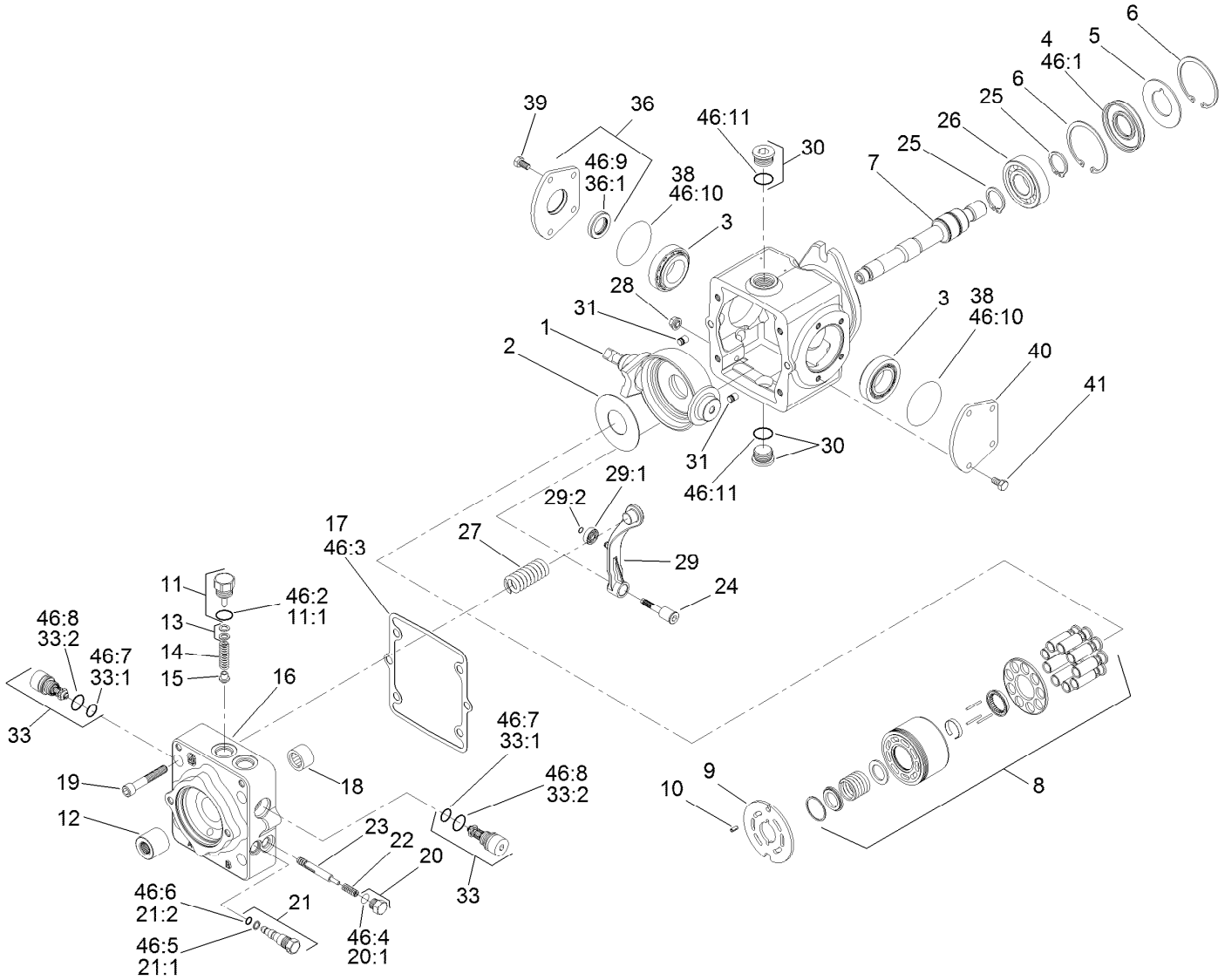

Hydraulic Pump Assembly No. 119-6972

Ref.	Part Number	Qty.	Description
1	115-8092	1	Swashplate
2	75-0400	1	Plate-Thrust
3	110-6483	2	Bearing Kit
4	110-6471	1	Seal-Lip
5	95-4400	1	Washer-Backup
6	69-3200	2	Ring-Retaining
7	110-6484	1	Shaft-Auxiliary
8	110-6472	1	Cylinder Block Kit ASM
9	110-6473	1	Plate-Valve (Clockwise)
10	110-6485	1	Pin-Slotted
11	110-6486	1	Plug-Relief, Charge
11:1	28-3570	1	O-Ring
12	110-6480	1	Coupling
13	92-1353	1	Shim Kit
14	110-6474	1	Spring
15	110-6475	1	Poppet
16	115-8087	1	Cap-End
17	110-6476	1	Gasket-Cap, End

Ref.	Part Number	Qty.	Description
18	75-0500	1	Bearing-Needle
19	110-6489	4	Screw
20	94-9415	2	Plug ASM
20:1		1	O-Ring ■
21	107-4364	1	Bypass Valve ASM
21:1	25-2630	1	Ring-Back Up
21:2	110-6498	1	O-Ring
22	110-6491	2	Spring
23	110-6492	1	Spool-Loop, Flush
24	110-6493	1	Pivot-Return, Neutral
25	69-3170	2	Ring-Retaining
26	75-0460	1	Bearing-Ball
27	115-8085	1	Spring-Neutral Return
28	110-6496	1	Nut-Seal
29	110-6497	1	Neutral Return Arm ASM
29:1	110-6494	1	Bearing-Cam
29:2	110-3056	1	Ring-Retaining
30	69-3130	2	Plug

● Not illustrated

■ Not serviced separately

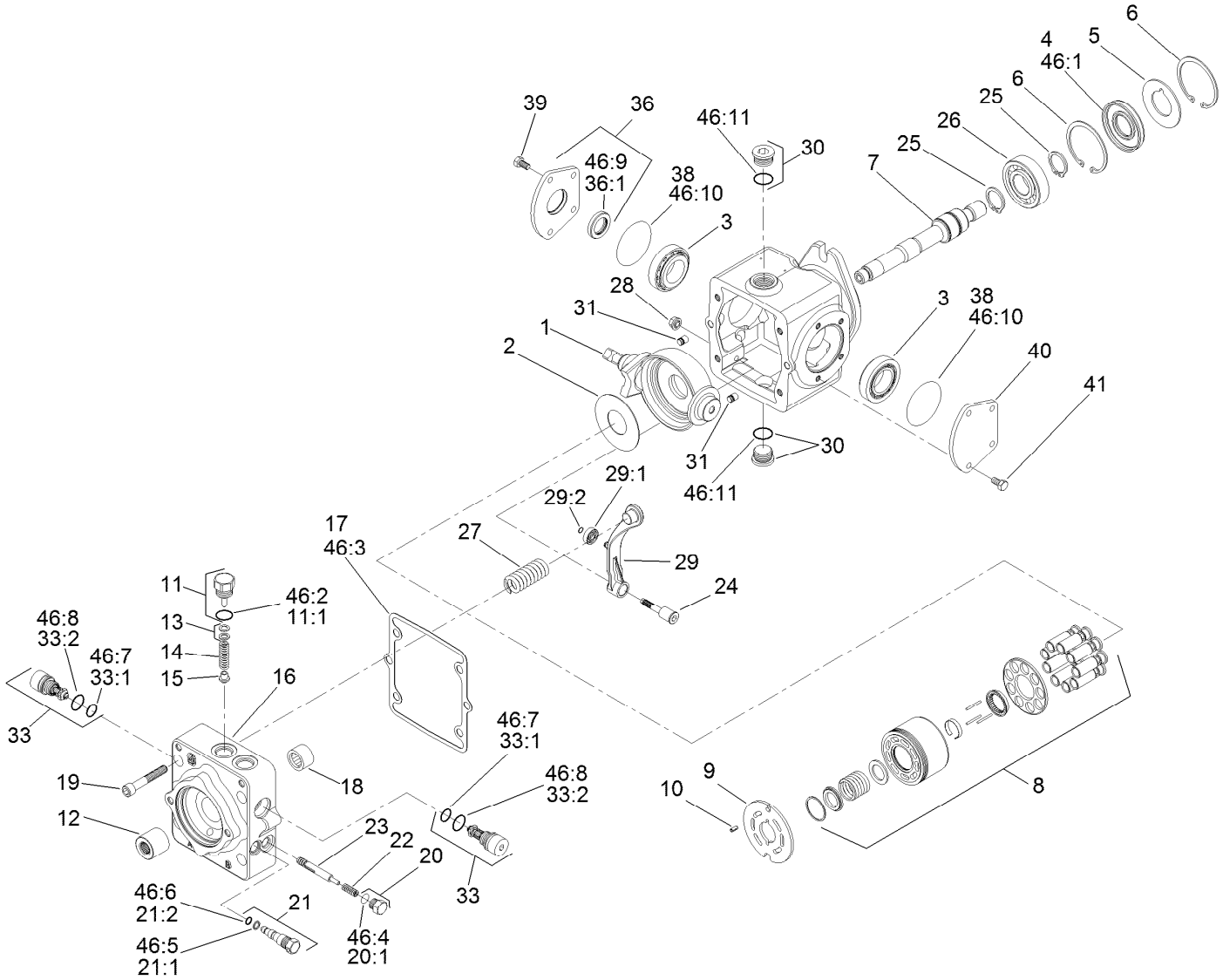

Hydraulic Pump Assembly No. 119-6972 (continued)

Ref.	Part Number	Qty.	Description
31	112-0158	2	Pin
33	110-6477	2	Valve-Relief
33:1	75-0240	1	O-Ring
33:2	84-0560	1	O-Ring
36	110-6499	1	Trunnion Cover ASM
36:1	110-6478	1	Seal-Lip
38	84-0430	2	O-Ring
39	112-0150	4	Screw
40	84-0440	1	Cover-Trunnion
41	112-0151	4	Screw
46	110-6481	1	Seal Kit ●

Ref.	Part Number	Qty.	Description
46:1	110-6471	1	Seal-Lip
46:2	28-3570	1	O-Ring
46:3	110-6476	1	Gasket-Cap, End
46:4	131-8631	2	O-Ring
46:5	25-2630	1	Ring-Back Up
46:6	110-6498	1	O-Ring
46:7	75-0240	2	O-Ring
46:8	84-0560	2	O-Ring
46:9	110-6478	1	Seal-Lip
46:10	84-0430	2	O-Ring
46:11	131-8614	2	O-Ring

● Not illustrated

■ Not serviced separately

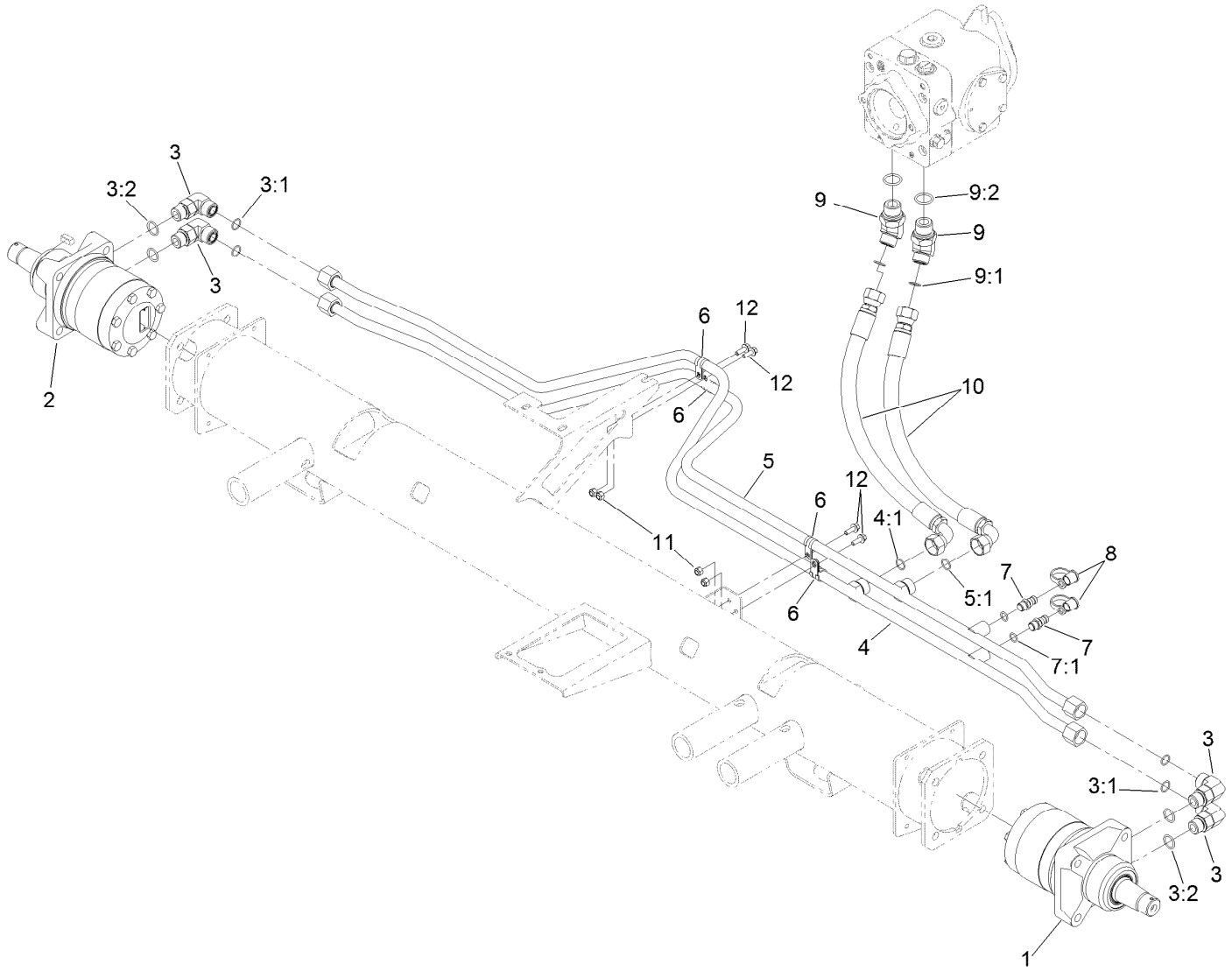

Traction Hydraulic Assembly

Ref.	Part Number	Qty.	Description
1	133-2935	1	Hydraulic Motor ASM
2	133-2934	1	Hydraulic Motor ASM
3	340-17	4	Fitting-Elbow, 90 DEG
3:1	237-65	1	O-Ring
3:2	237-80	1	O-Ring
4	108-7632	1	Tube ASM
4:1	237-65	1	O-Ring
5	108-7633	1	Tube ASM
5:1	237-65	1	O-Ring
6	2412-134	4	Clamp-R

Ref.	Part Number	Qty.	Description
7	59-7410	2	Fitting-Diagnostic
7:1	237-42	1	O-Ring
8	354-79	2	Cap-Dust
9	340-156	2	Fitting-Elbow 45
9:1	237-65	1	O-Ring
9:2	237-81	1	O-Ring
10	108-1679	2	Hose-HYD
11	3296-42	4	Nut-Lock, NI
12	3234-4	4	Screw-HHF

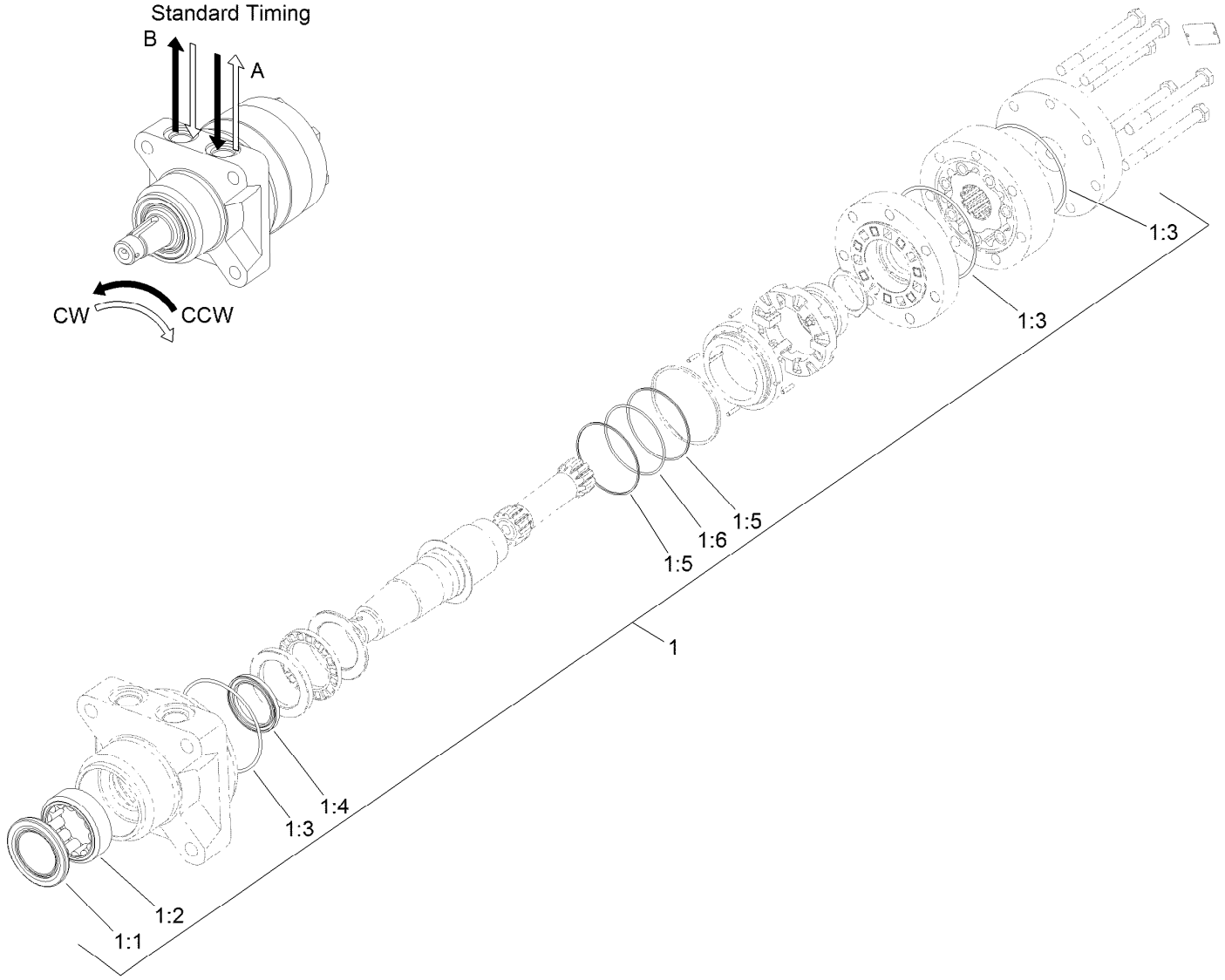

Hydraulic Motor Assembly No. 133-2935 (CCW)

Ref.	*Part Number*	*Qty.*	*Description*
1	120-6268	1	Seal Kit
1:1		1	Seal-Grease ●
1:2		1	Shell-Bearing ●
1:3		3	O-Ring ●
1:4		1	Seal-Shaft ●
1:5		2	Ring-Back Up ●
1:6		1	O-Ring ●

● Not serviced separately

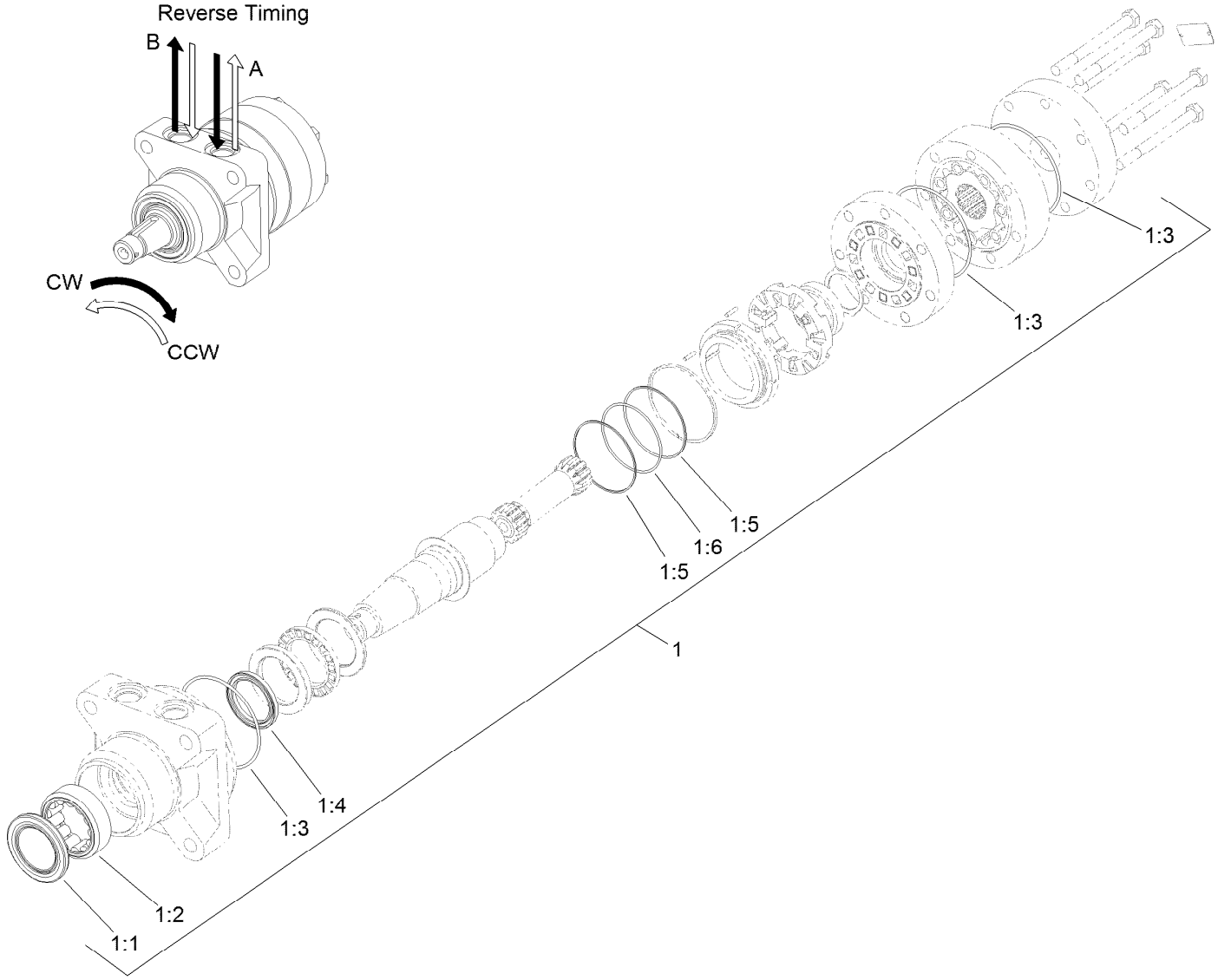

Hydraulic Motor Assembly No. 133-2934 (CW)

Ref.	*Part Number*	*Qty.*	*Description*
1	120-6268	1	Seal Kit
1:1		1	Seal-Grease ●
1:2		1	Shell-Bearing ●
1:3		3	O-Ring ●
1:4		1	Seal-Shaft ●
1:5		2	Ring-Back Up ●
1:6		1	O-Ring ●

● Not serviced separately

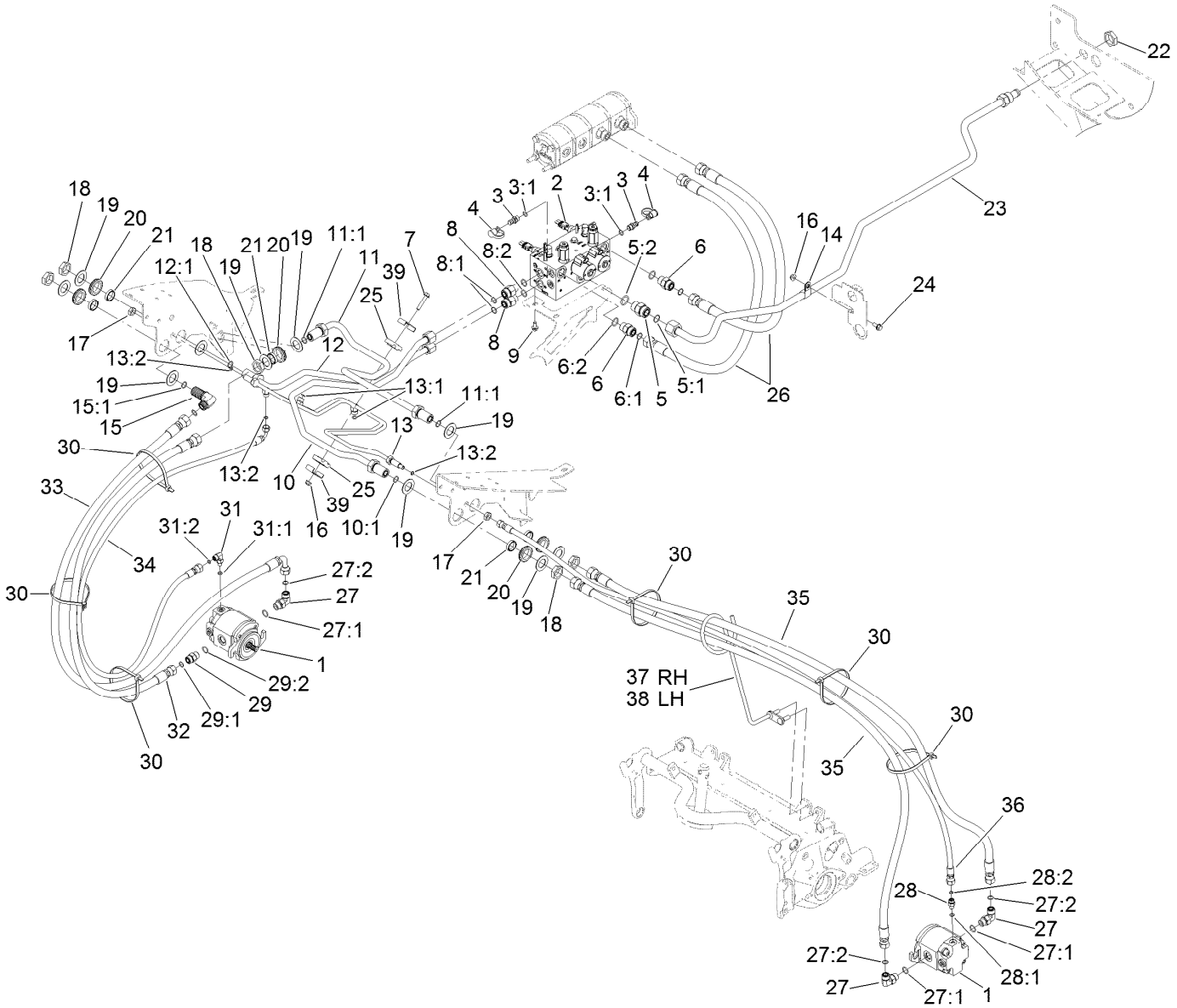

No. 1, 4 and 5 Reel Drive Hydraulic Assembly

Ref.	Part Number	Qty.	Description
1	120-2072	3	HYD Motor ASM
2	121-5628	1	Hydraulic Manifold ASM
3	59-7410	2	Fitting-Diagnostic
3:1	237-42	1	O-Ring
4	354-79	2	Cap-Dust
5	340-9	1	Fitting-STR
5:1	237-58	1	O-Ring
5:2	237-81	1	O-Ring
6	340-7	2	Fitting-Straight
6:1	237-65	1	O-Ring
6:2	237-80	1	O-Ring
7	115-1794	1	Screw-HHF
8	340-155	2	Fitting-Straight
8:1	237-79	1	O-Ring
8:2	237-151	1	O-Ring
9	3234-14	3	Screw-HHF
10	117-0138	1	Tube ASM
10:1	237-65	1	O-Ring
11	117-0137	1	Tube ASM
11:1	237-65	2	O-Ring
12	117-0139	1	Tube ASM

Ref.	Part Number	Qty.	Description
12:1	237-65	1	O-Ring
13	110-5286	1	Tube ASM
13:1	237-22	2	O-Ring
13:2	237-21	3	O-Ring
14	2412-4	1	Clamp-R
15	340-72	1	Fitting-Bulkhead, 90 DEG
15:1	237-65	2	O-Ring
16	104-8300	2	Nut-HF, NI
17	340-78	2	Nut-Lock
18	340-74	5	Nut-Lock, Bulkhead
19	69-9010	10	Washer
20	240-3	5	Grommet-Rubber
21	125-1984	5	Spacer
22	340-126	1	Nut-Bulkhead
23	108-1700	1	Tube ASM
24	3234-5	1	Screw-HHF
25	56-7970	2	Clamp-Tube
26	108-1686	2	Hose-HYD
27	340-98	5	Fitting-Elbow, 90 DEG
27:1	237-79	1	O-Ring
27:2	237-30	1	O-Ring

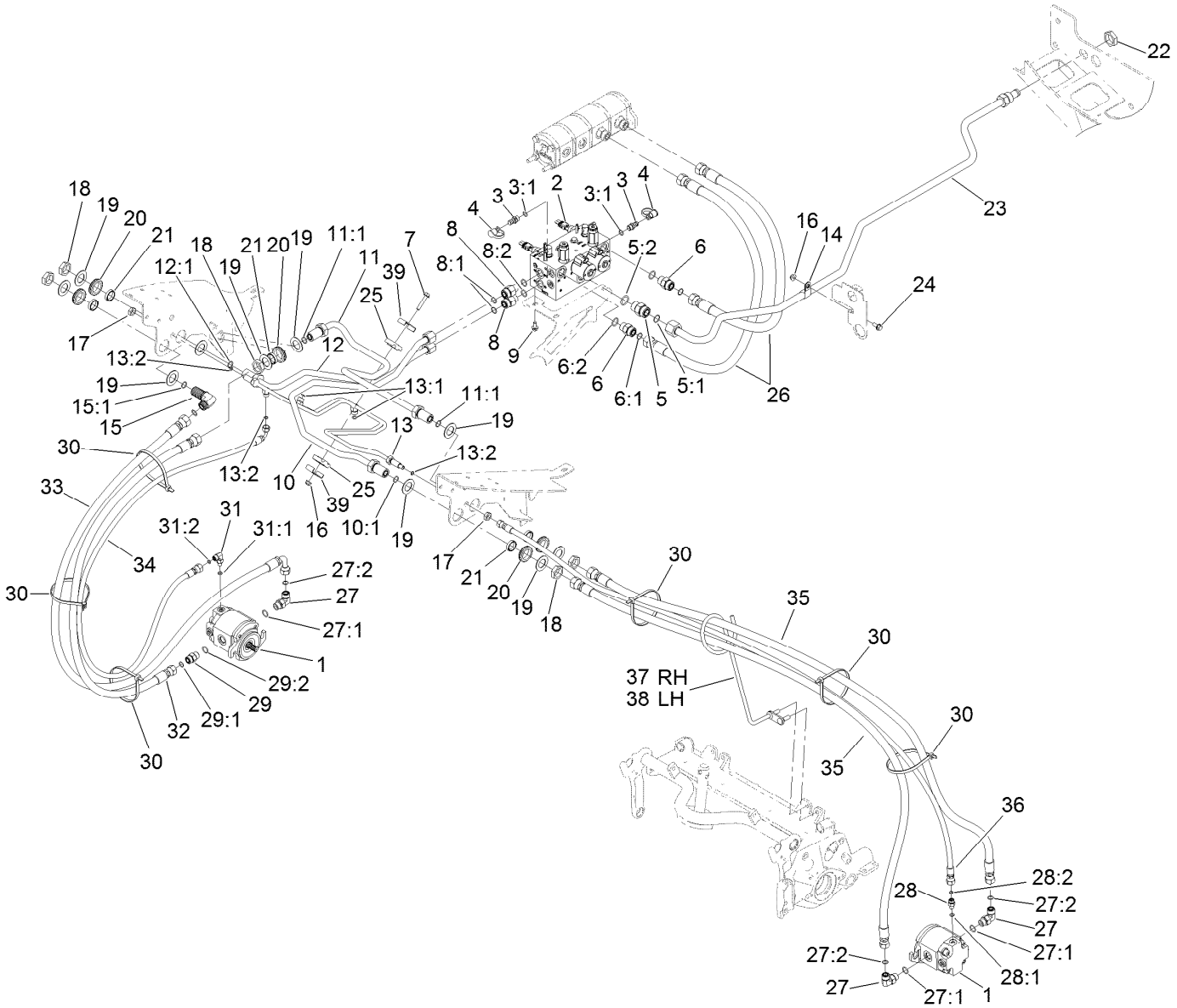

No. 1, 4 and 5 Reel Drive Hydraulic Assembly (continued)

Ref.	Part Number	Qty.	Description
28	340-92	2	Fitting-Straight
28:1	237-78	1	O-Ring
28:2	237-21	1	O-Ring
29	340-4	1	Fitting-Straight
29:1	237-30	1	O-Ring
29:2	237-79	1	O-Ring
30	3334-945	9	Tie-Cable
31	340-132	1	Fitting-Elbow, 90 DEG
31:1	237-78	1	O-Ring

Ref.	Part Number	Qty.	Description
31:2	237-21	1	O-Ring
32	114-0633	1	Hose-HYD
33	117-5190	1	Hose-HYD
34	106-3671	1	Hose-HYD
35	117-5188	4	Hose-HYD
36	106-3680	2	Hose-HYD
37	119-3920	1	Guide-Hose, RH
38	119-3921	1	Guide-Hose, LH
39	119-1419	2	Plate-Clamp

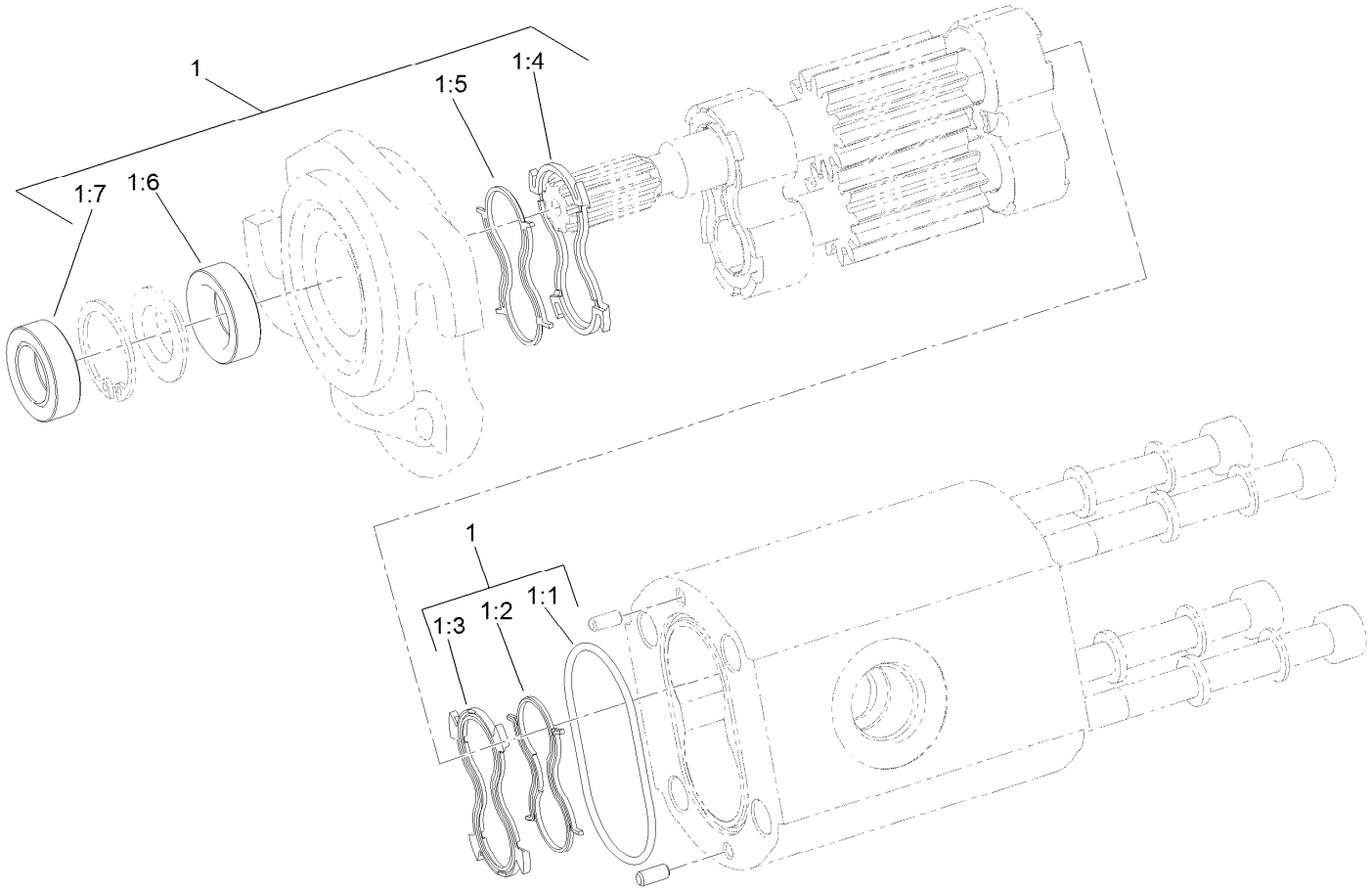

Hydraulic Reel Motor Assembly No. 120-2072

Ref.	*Part Number*	*Qty.*	*Description*
1	119-7113	1	Seal Kit
1:1		1	O-Ring Housing ●
1:2		1	Seal-Anti Extrusion ●
1:3		1	Seal-Plate, Balancing ●
1:4		1	Seal-Plate, Balancing ●
1:5		1	Seal-Anti Extrusion ●
1:6		1	Seal-Shaft (Inboard) ●
1:7		1	Seal-Shaft (Outboard) ●

● Not serviced separately

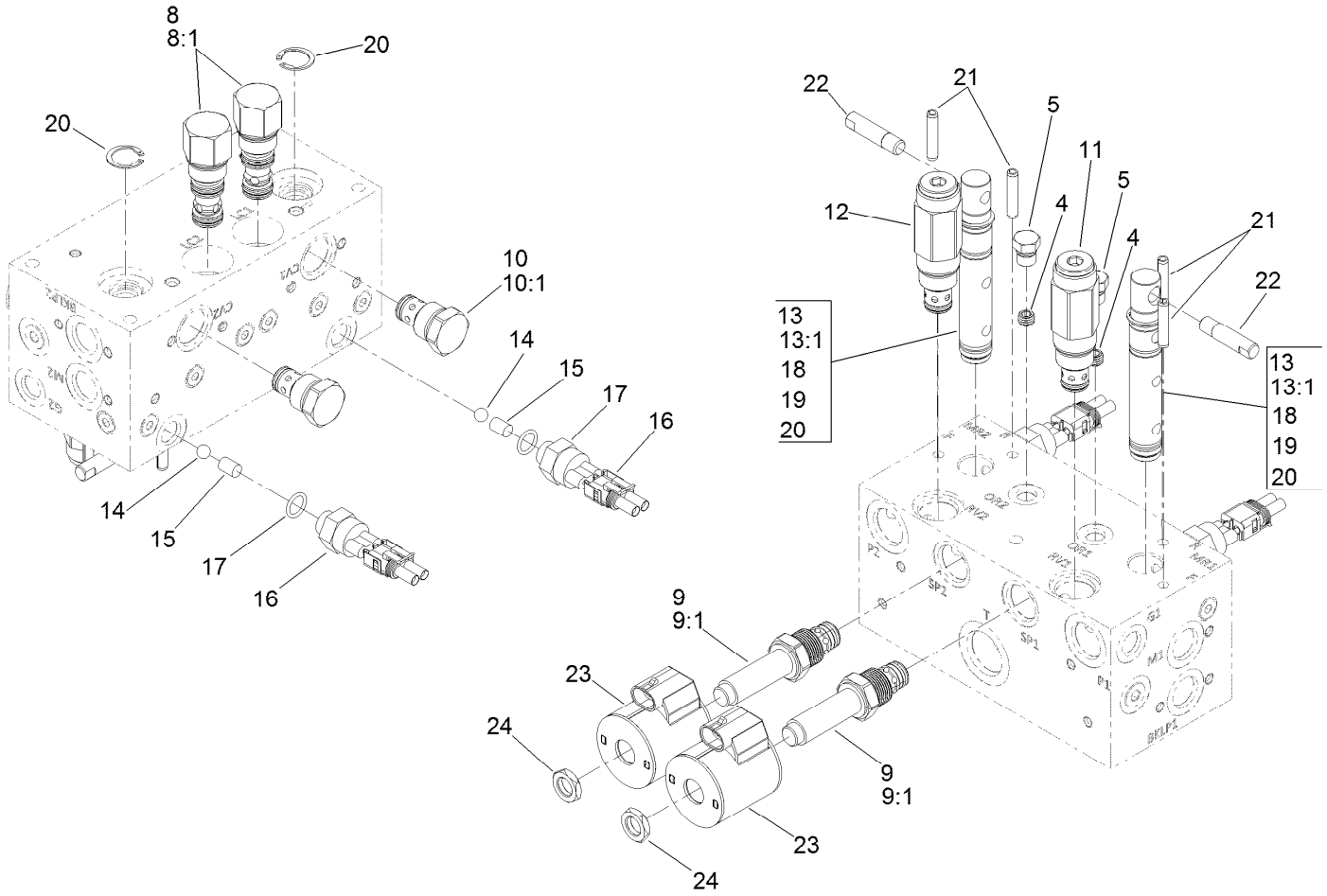

Manifold Assembly No. 121-5628

Ref.	Part Number	Qty.	Description
4	110-8883	1	Plug-Orifice (0.040)
5	117-0115	1	Plug
8	120-1693	2	Compensator-Pressure
8:1	119-2159	1	Seal Kit
9	120-1694	2	Valve-Proportional, NC
9:1	105-9159	1	Seal Kit
10	110-8881	2	Valve-Check
10:1	105-9159	1	Seal Kit ●
11	125-8757	1	Valve-Relief, 2500 PSI
12	125-8758	1	Valve-Relief
13	117-0108	2	Spool-Rotary
13:1	117-0109	1	Seal Kit

Ref.	Part Number	Qty.	Description
14	117-4605	2	Ball-SS
15	120-1650	2	Pin
16	72-4310	2	Switch-Ball
17	110-8757	2	O-Ring
18	117-4606	6	O-Ring
19	112-6534	4	Ring-Back Up
20	112-6532	4	Ring-Retaining
21	112-6531	4	Pin-Spring
22	110-8758	2	Handle-Spool
23	110-6344	2	Coil-12V, DC
24	110-2634	2	Nut-Coil

● Not illustrated

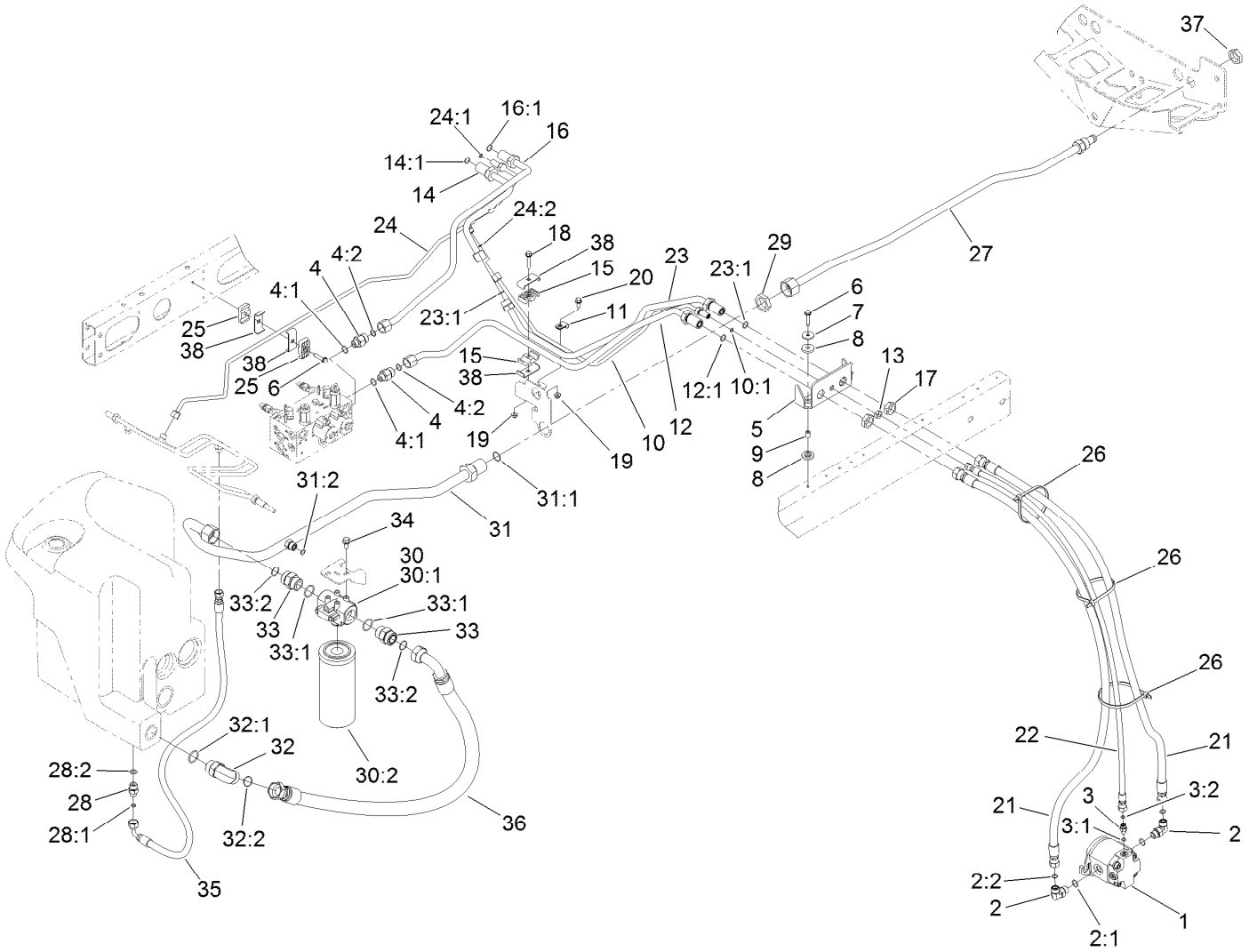

No. 2 and 3 Reel Drive Hydraulic Assembly

Ref.	Part Number	Qty.	Description
1	120-2072	2	HYD Motor ASM
2	340-98	4	Fitting-Elbow, 90 DEG
2:1	237-79	1	O-Ring
2:2	237-30	1	O-Ring
3	340-92	2	Fitting-Straight
3:1	237-78	1	O-Ring
3:2	237-21	1	O-Ring
4	340-155	2	Fitting-Straight
4:1	237-79	1	O-Ring
4:2	237-151	1	O-Ring
5	117-0174-03	2	Bracket-Bulkhead
6	32144-57	5	Screw
7	105-3048	4	Washer-Flat
8	240-11	8	Bushing-Flange
9	99-8611	4	Spacer
10	114-8887	1	Tube ASM
10:1	237-21	1	O-Ring
11	2412-113	1	Clamp-R
12	117-0142	1	Tube ASM
12:1	237-65	1	O-Ring
13	340-78	2	Nut-Lock

Ref.	Part Number	Qty.	Description
14	117-0140	1	Tube ASM
14:1	237-65	1	O-Ring
15	56-7971	2	Clamp-Tube
16	117-0141	1	Tube ASM
16:1	237-65	1	O-Ring
17	340-74	4	Nut-Lock, Bulkhead
18	115-1794	1	Screw-HHF
19	104-8300	2	Nut-HF, NI
20	3234-5	1	Screw-HHF
21	114-0633	4	Hose-HYD
22	98-4590	2	Hose-HYD
23	117-0177	1	Tube ASM
23:1	237-65	2	O-Ring
24	114-8888	1	Tube ASM
24:1	237-22	1	O-Ring
24:2	237-21	1	O-Ring
25	56-7972	2	Clamp-Tube
26	3334-945	6	Tie-Cable
27	108-1691	1	Tube ASM
28	340-3	1	Fitting-Straight
28:1	237-22	1	O-Ring

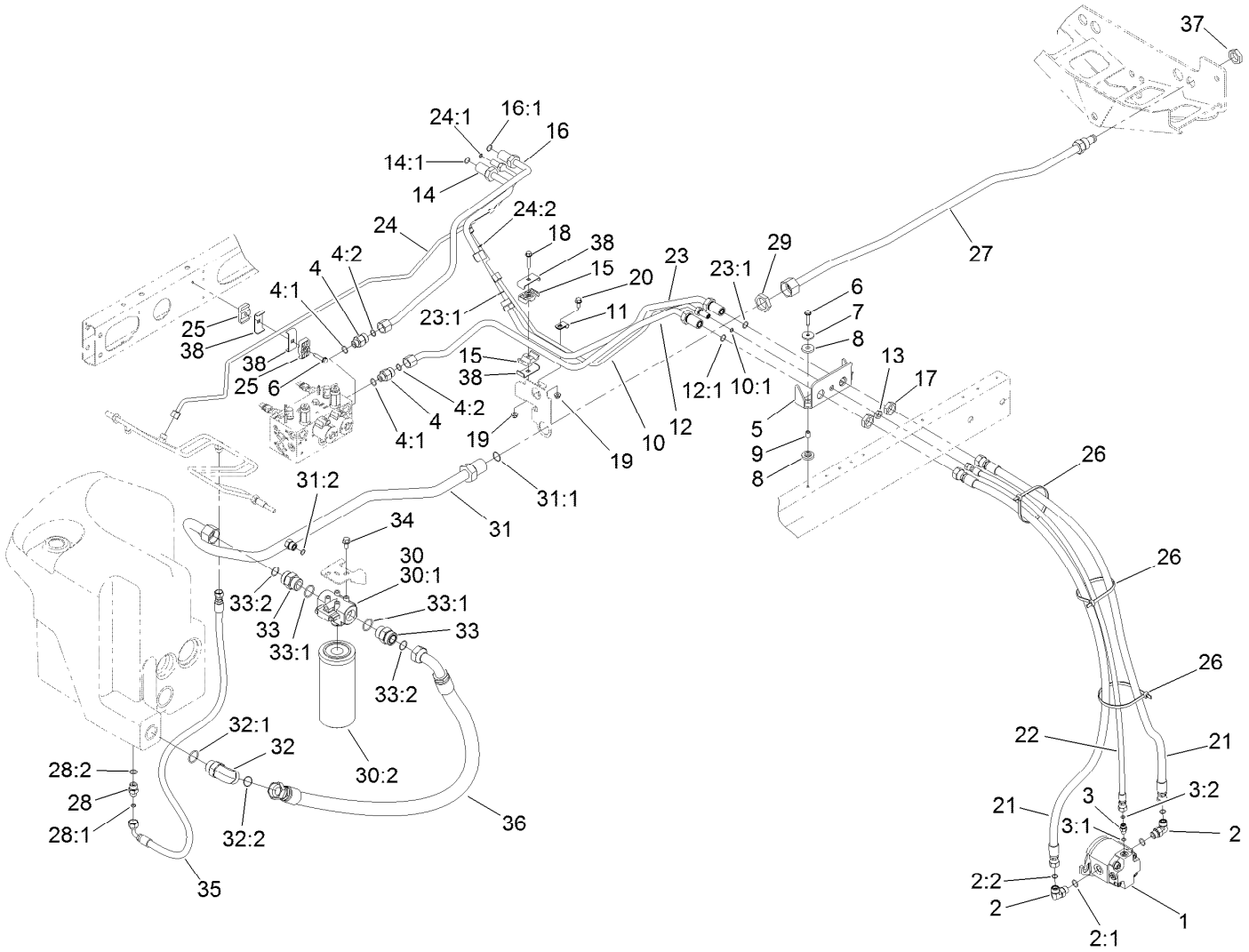

No. 2 and 3 Reel Drive Hydraulic Assembly (continued)

Ref.	Part Number	Qty.	Description
28:2	237-79	1	O-Ring
29	340-128	1	Nut-Bulkhead
30	98-3923	1	Oil Filter ASM
30:1	104-0080	1	Filter Head ASM
30:2	94-2621	1	Element-Filter
31	108-1699	1	Tube ASM
31:1	340-65	1	O-Ring
31:2	237-30	1	O-Ring
32	340-129	1	Fitting-Elbow, 90 DEG
32:1	237-146	1	O-Ring

Ref.	Part Number	Qty.	Description
32:2	340-65	1	O-Ring
33	104-3797	2	Fitting-Straight
33:1	237-146	1	O-Ring
33:2	340-65	1	O-Ring
34	3234-1	2	Screw-HHF
35	66-8490	1	Hose-HYD
36	108-1689	1	Hose-HYD
37	340-126	1	Nut-Bulkhead
38	119-1419	3	Plate-Clamp

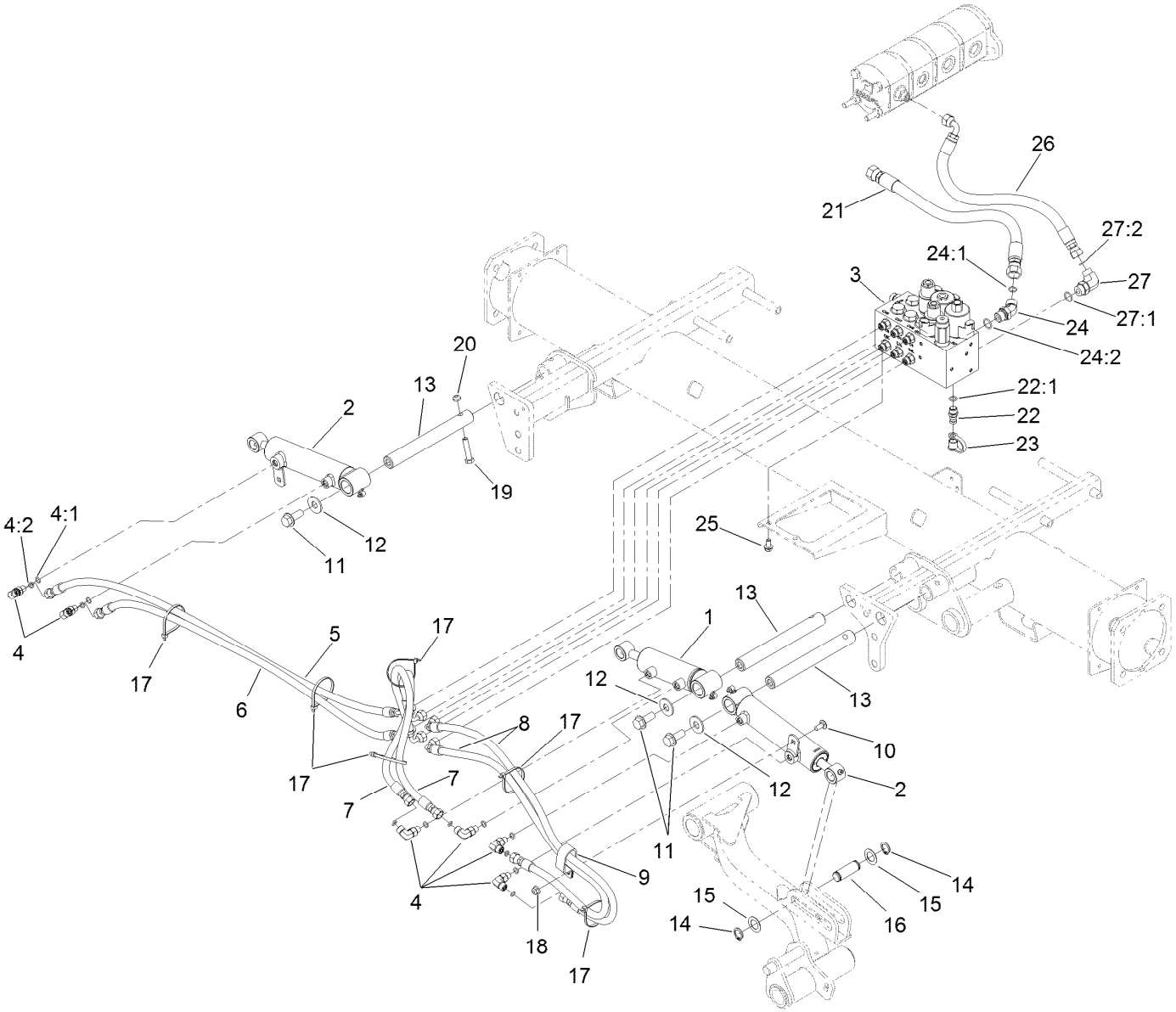

No. 1, 4 and 5 Lift Arm Hydraulic Assembly

Ref.	Part Number	Qty.	Description
1	119-6988	1	HYD Cylinder ASM
2	119-6987	2	HYD Cylinder ASM
3	105-7577	1	HYD Lift Block Manifold ASM
4	340-132	6	Fitting-Elbow, 90 DEG
4:1	237-78	1	O-Ring
4:2	237-21	1	O-Ring
5	106-3692	1	Hose-HYD
6	106-3693	1	Hose-HYD
7	93-6887	2	Hose-HYD
8	85-4940	2	Hose-HYD
9	2412-137	1	Clamp-R, Double
10	3230-23	1	Bolt-CARR
11	3234-38	3	Screw-HHF
12	3256-6	3	Washer-Flat
13	117-0148	3	Pin-Cylinder
14	32120-93	6	Ring-Retaining
15	3-6498	6	Washer-Thrust

Ref.	Part Number	Qty.	Description
16	104-0046	3	Pin-Slide, Cylinder
17	3290-379	6	Tie-Cable
18	104-8300	1	Nut-HF, NI
19	323-9	3	Screw-HH
20	3296-59	3	Nut-Lock, NI
21	117-0180	1	Hose-HYD
22	59-7410	1	Fitting-Diagnostic
22:1	237-42	1	O-Ring
23	354-79	1	Cap-Dust
24	340-101	1	Fitting-HYD, 45 DEG
24:1	237-30	1	O-Ring
24:2	237-79	1	O-Ring
25	3234-14	2	Screw-HHF
26	92-5694	1	Hose-Hydraulic
27	340-18	1	Fitting-HYD, 90 DEG
27:1	237-79	1	O-Ring
27:2	237-22	1	O-Ring

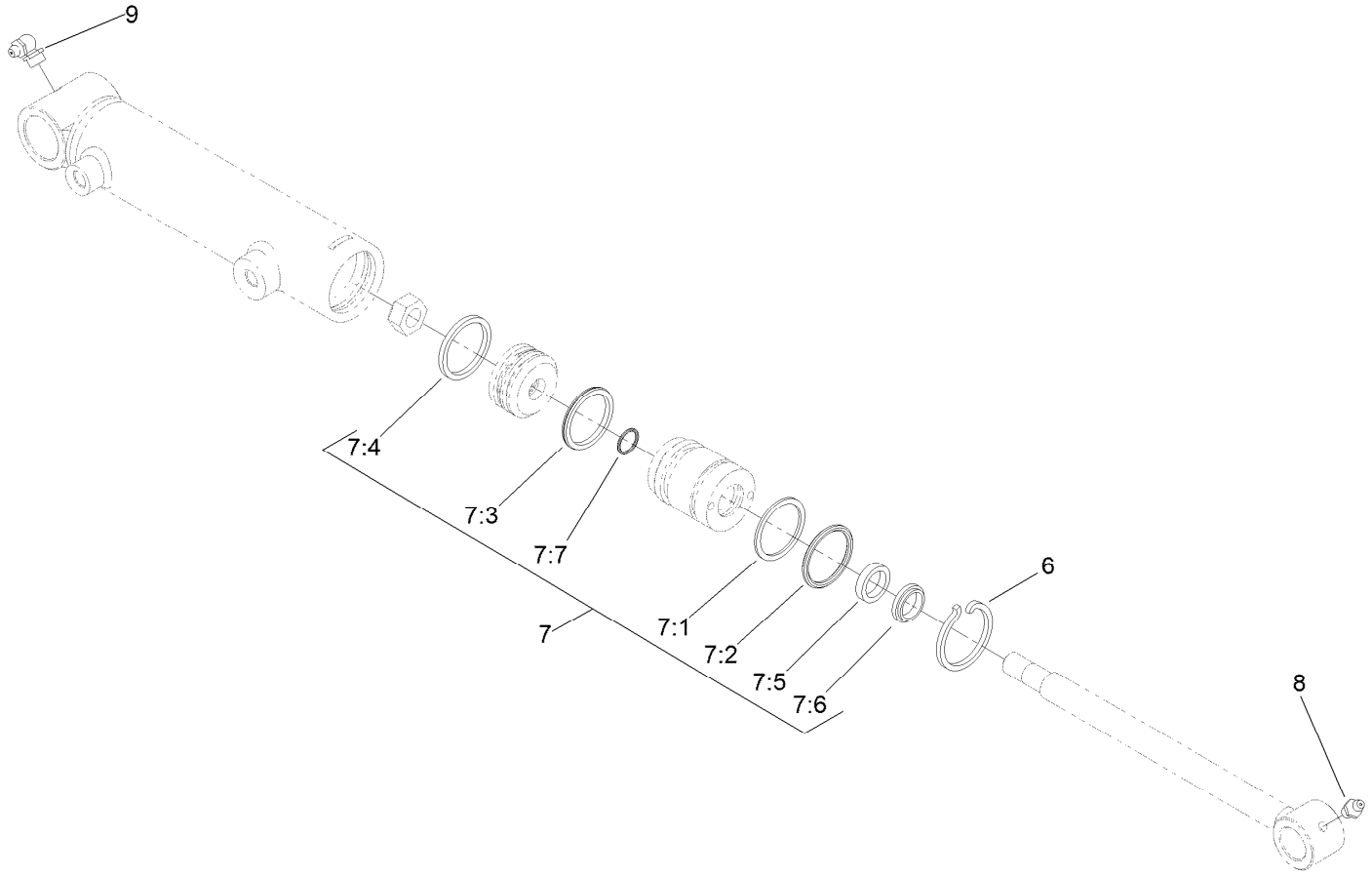

Hydraulic Cylinder Assembly No. 119-6988

Ref.	Part Number	Qty.	Description
6	84-1680	1	Ring-Retaining
7	119-6992	1	Seal Kit
7:1		1	O-Ring ●
7:2		1	Backup ●
7:3		1	Bp Seal ●
7:4		1	Wear Ring-Ht ●
7:5		1	Bs Seal ●
7:6		1	Dust Seal-Dt ●
7:7		1	O-Ring ●
8	302-5	1	Fitting-Grease
9	302-33	1	Fitting-Grease

● Not serviced separately

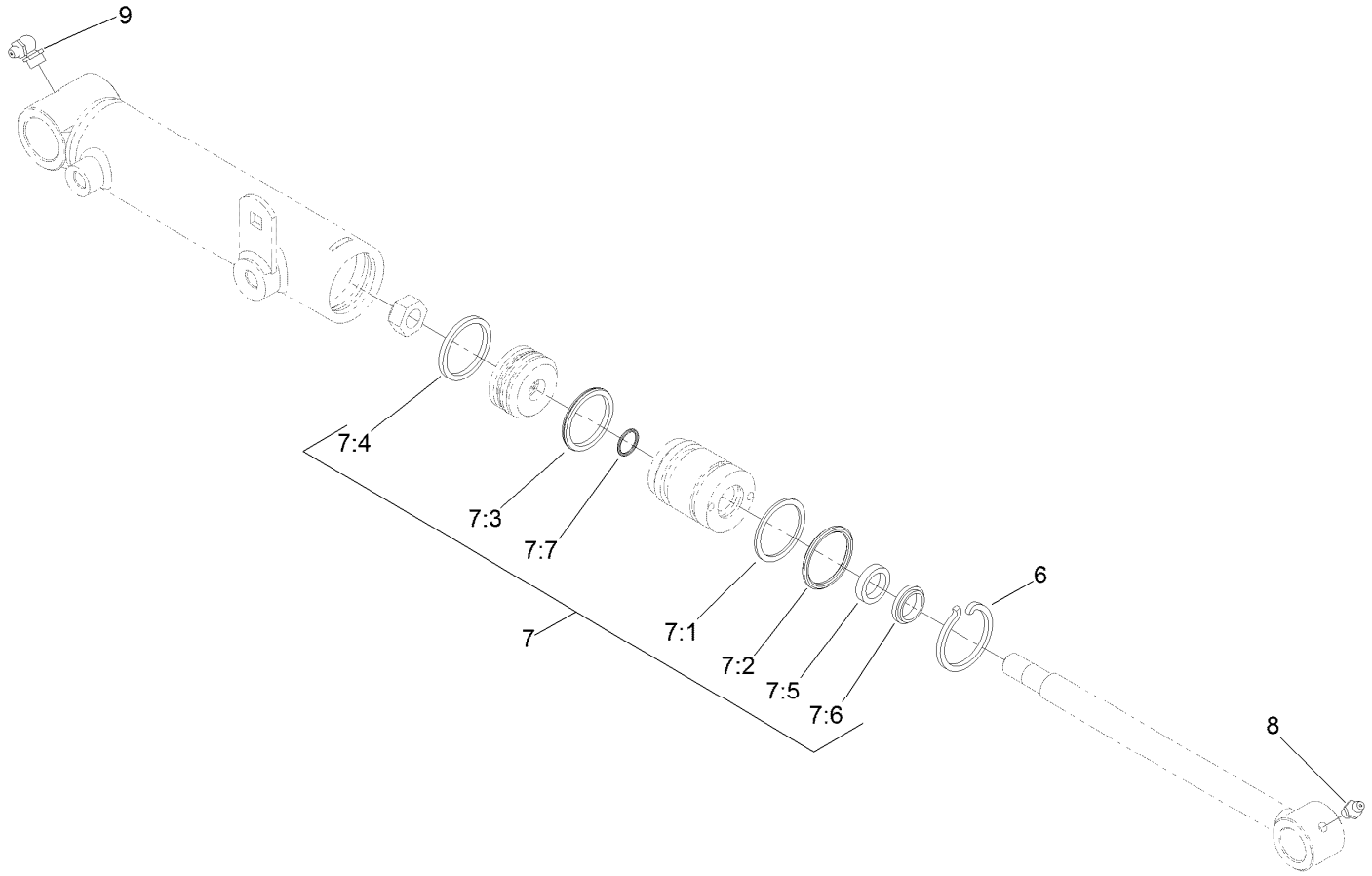

Hydraulic Cylinder Assembly No. 119-6987

Ref.	*Part Number*	*Qty.*	*Description*
6	84-1680	1	Ring-Retaining
7	119-6992	1	Seal Kit
7:1		1	O-Ring ●
7:2		1	Backup ●
7:3		1	Bp Seal ●
7:4		1	Wear Ring-Ht ●
7:5		1	Bs Seal ●
7:6		1	Dust Seal-Dt ●
7:7		1	O-Ring ●
8	302-5	1	Fitting-Grease
9	302-33	1	Fitting-Grease

● Not serviced separately

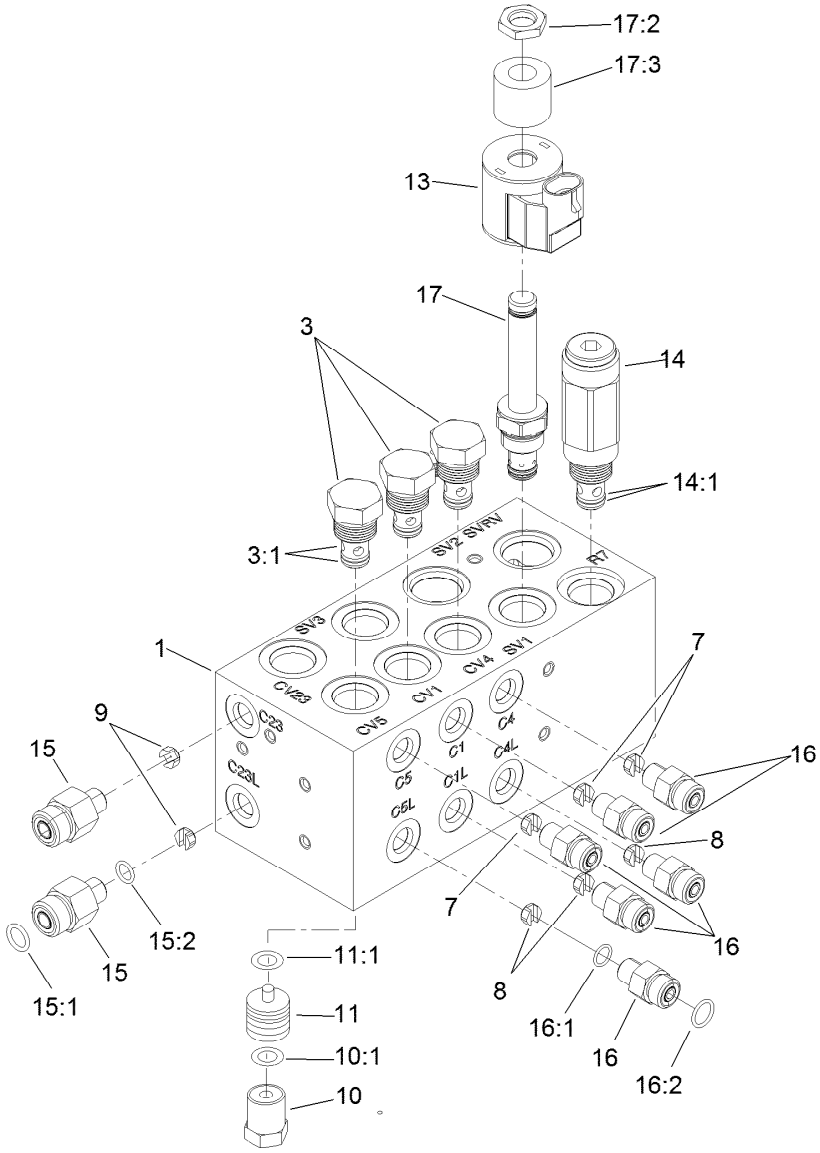

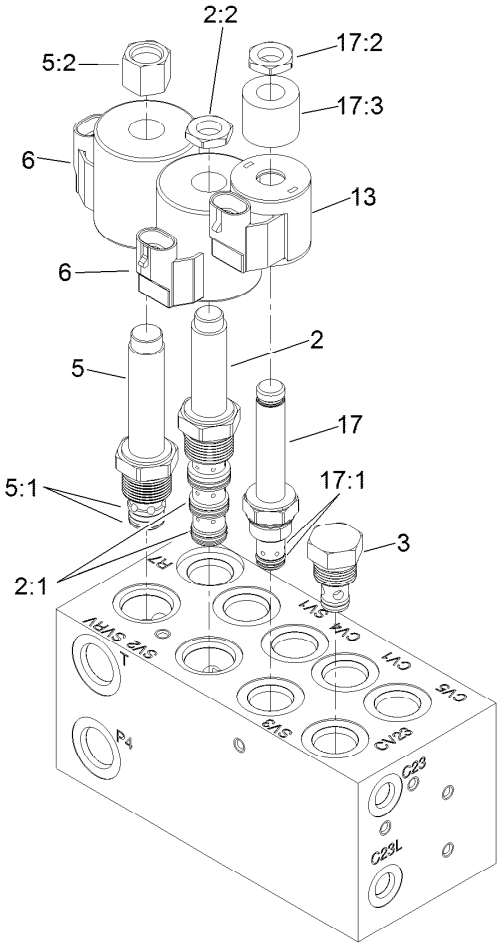

Hydraulic Manifold Block Assembly No. 105-7577

Ref.	Part Number	Qty.	Description
1		1	Block-Manifold ■
2	110-8906	1	Valve-Solenoid
2:1	110-8908	1	Spool Valve Seal Kit
2:2	110-2634	1	Nut-Coil
3	110-9006	4	Valve-Check
3:1	105-9156	1	Seal Kit
5	110-8905	1	Valve-Relief, Solenoid
5:1	110-6316	1	Seal Kit
5:2	130-8180	1	Nut-Coil (9/16-24 Unef-2B)
6	110-6344	2	Coil-12V, DC
7	110-8904	3	Orifice-Control, Flow (0.028)
7	125-8849	3	Orifice-Flow Control ●
8	110-8903	3	Orifice-Control, Flow (0.055)
9	110-8902	2	Orifice-Control, Flow (0.046)
10	354-70	4	Plug-Hex, Hollow
10:1	237-80	1	O-Ring

Ref.	Part Number	Qty.	Description
11	110-8901	4	Piston-Pilot
11:1	110-8900	1	O-Ring
13	110-0497	2	Coil-Solenoid
14	110-8899	1	Valve-Relief
14:1	105-9156	1	Seal Kit
15	340-88	2	Fitting-Straight
15:1	237-22	1	O-Ring
15:2	237-78	1	O-Ring
16	340-92	6	Fitting-Straight
16:1	237-78	1	O-Ring
16:2	237-21	1	O-Ring
17	110-8898	2	Valve-Solenoid
17:1	107-7527	1	Seal Kit
17:2	110-2634	1	Nut-Coil
17:3	110-8909	1	Spacer-Coil

● Optional Equipment

■ Not serviced separately

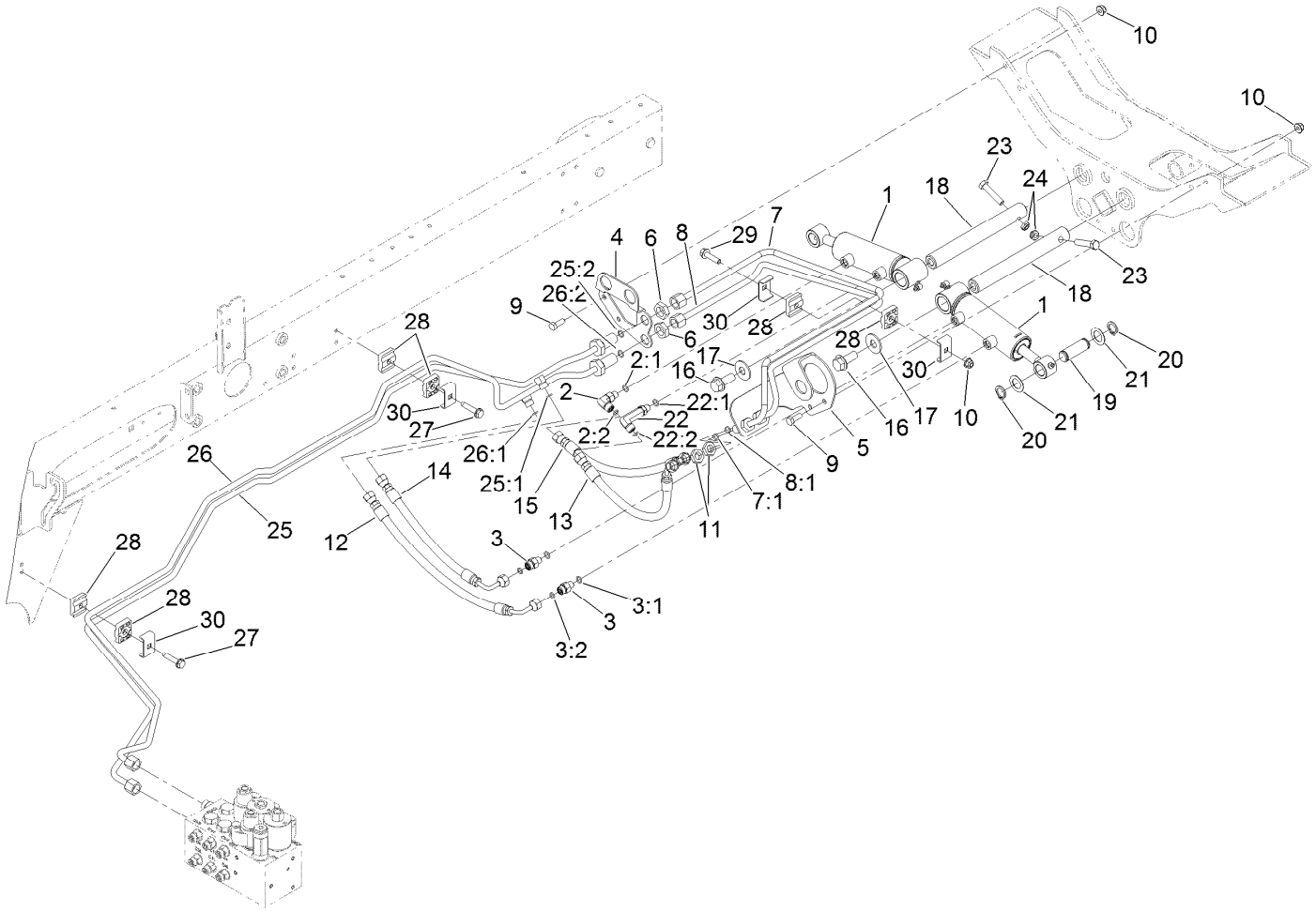

Rear Lift Hydraulic Assembly

Ref.	Part Number	Qty.	Description
1	119-6988	2	HYD Cylinder ASM
2	340-132	1	Fitting-Elbow, 90 DEG
2:1	237-78	1	O-Ring
2:2	237-21	1	O-Ring
3	340-92	2	Fitting-Straight
3:1	237-78	1	O-Ring
3:2	237-21	1	O-Ring
4	120-3782-01	1	Bracket-Bulkhead, RH
5	110-0917-01	1	Bracket-Bulkhead, LH
6	340-70	2	Nut-Lock
7	133-2987	1	Tube-ASM
7:1	237-21	1	O-Ring
8	133-2986	1	Tube-ASM
8:1	237-21	1	O-Ring
9	322-4	4	Screw-HH
10	104-8300	5	Nut-HF, NI
11	340-78	2	Nut-Lock
12	110-0930	1	Hose-HYD
13	110-8966	1	Hose-HYD
14	110-0929	1	Hose-HYD
15	110-0931	1	Hose-HYD

Ref.	Part Number	Qty.	Description
16	3234-38	2	Screw-HHF
17	3256-6	2	Washer-Flat
18	117-0148	2	Pin-Cylinder
19	104-0046	2	Pin-Slide, Cylinder
20	32120-93	4	Ring-Retaining
21	3-6498	4	Washer-Thrust
22	100-7695	1	Fitting-Elbow 90
22:1	237-78	1	O-Ring
22:2	237-21	1	O-Ring
23	323-9	2	Screw-HH
24	3296-59	2	Nut-Lock, NI
25	120-3766	1	HYD Tube ASM
25:1	237-21	1	O-Ring
25:2	237-22	1	O-Ring
26	120-3771	1	HYD Tube ASM
26:1	237-21	1	O-Ring
26:2	237-22	1	O-Ring
27	32144-57	2	Screw
28	56-7973	6	Clamp-Tube
29	3230-5	1	Bolt-CARR
30	119-1418	3	Plate-Clamp, Short

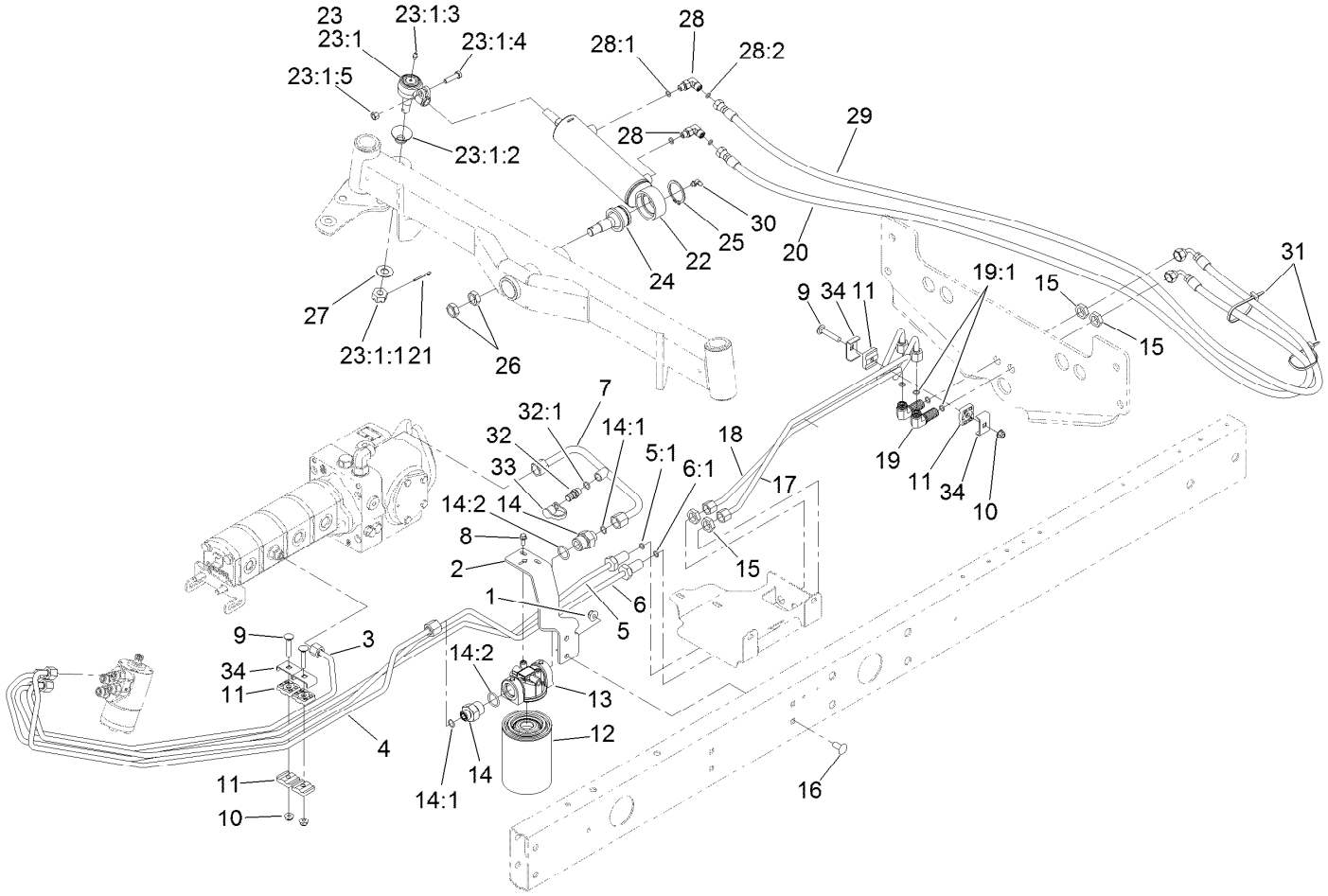

Steering Hydraulic Assembly

Ref.	Part Number	Qty.	Description
1	104-8301	2	Nut-HF, NI
2	110-0906-01	1	Support-Filter, Oil
3	108-1710	1	Tube ASM
4	108-1711	1	Tube-HYD
5	108-1712	1	Tube ASM
5:1	237-22	1	O-Ring
6	108-1713	1	Tube ASM
6:1	237-22	1	O-Ring
7	121-5601	1	Tube-HYD
8	3234-33	2	Screw-HHF
9	3230-5	3	Bolt-CARR
10	104-8300	3	Nut-HF, NI
11	56-7973	6	Clamp-Tube
12	86-3010	1	Filter-Oil
13	117-5820	1	Head-Filter
14	100-4240	2	Fitting-STR
14:1	237-30	1	O-Ring
14:2	237-81	1	O-Ring

Ref.	Part Number	Qty.	Description
15	340-70	4	Nut-Lock
16	3231-27	2	Screw-CARR
17	110-9019	1	Tube-HYD
18	110-9020	1	Tube-HYD
19	340-154	2	Union-Bulkhead
19:1	237-22	2	O-Ring
20	110-0928	1	Hose-HYD
21	3272-12	1	Pin-Cotter
22	110-9035	1	HYD Cylinder ASM
23	106-6895-03	1	Ball Joint ASM
23:1		1	Joint-Ball ●
23:1:1	32136-13	1	Nut-SHH
23:1:2	106-6896	1	Seal
23:1:3	302-5	1	Fitting-Grease
23:1:4	3210-7	1	Screw-HH
23:1:5	32152-5	1	Nut-Hex
24	106-6774	1	Joint-Ball
25	32151-104	1	Ring-Retaining, External

● Not serviced separately

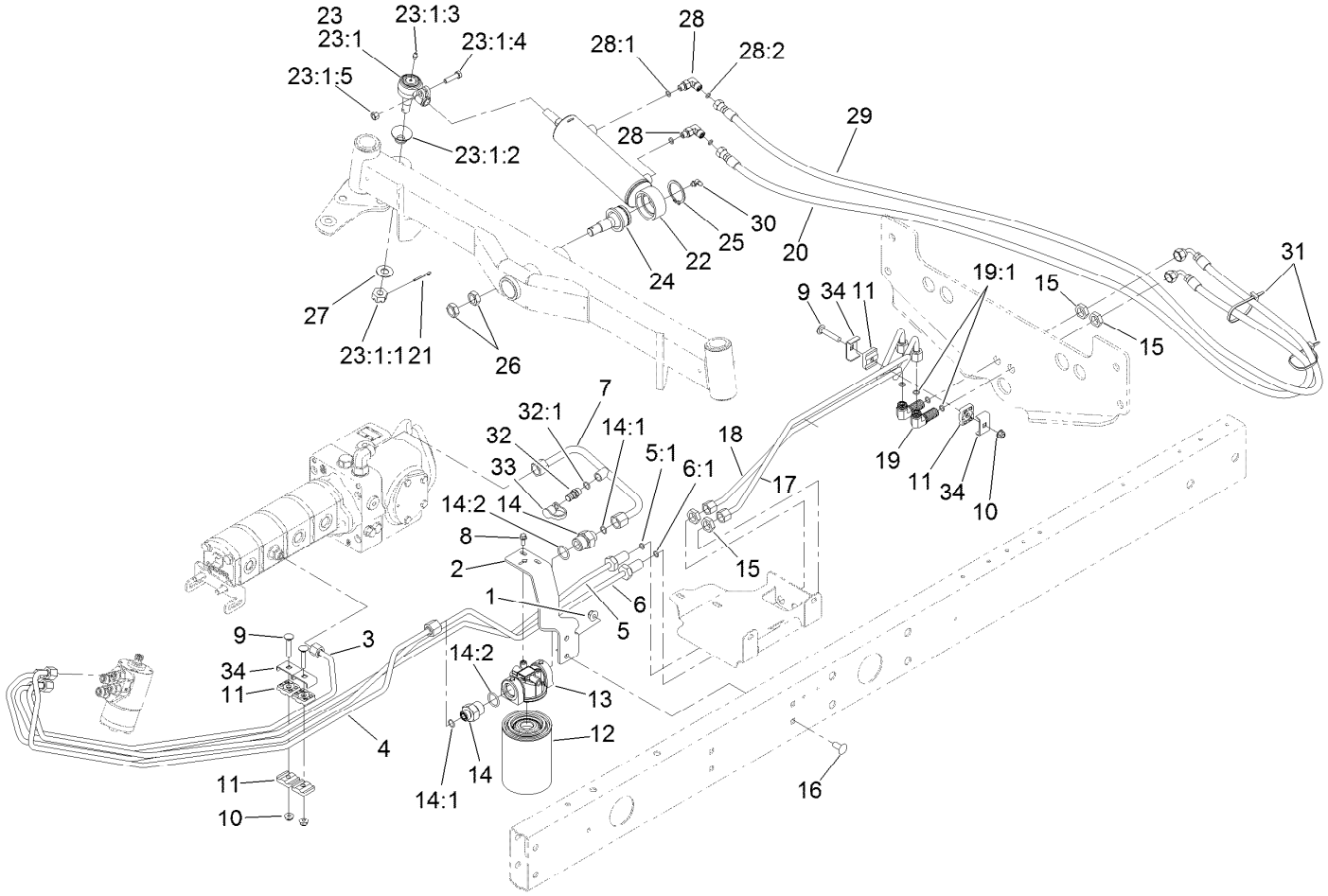

Steering Hydraulic Assembly (continued)

Ref.	Part Number	Qty.	Description
26	3220-6	2	Nut-Jam
27	69-8980	1	Washer
28	340-132	2	Fitting-Elbow, 90 DEG
28:1	237-78	1	O-Ring
28:2	237-21	1	O-Ring
29	110-0973	1	Hose-HYD
30	302-40	1	Fitting-Grease, 90 DEG
31	3290-378	2	Tie-Cable
32	59-7410	1	Fitting-Diagnostic
32:1	237-42	1	O-Ring
33	354-79	1	Cap-Dust
34	119-1418	4	Plate-Clamp, Short

● Not serviced separately

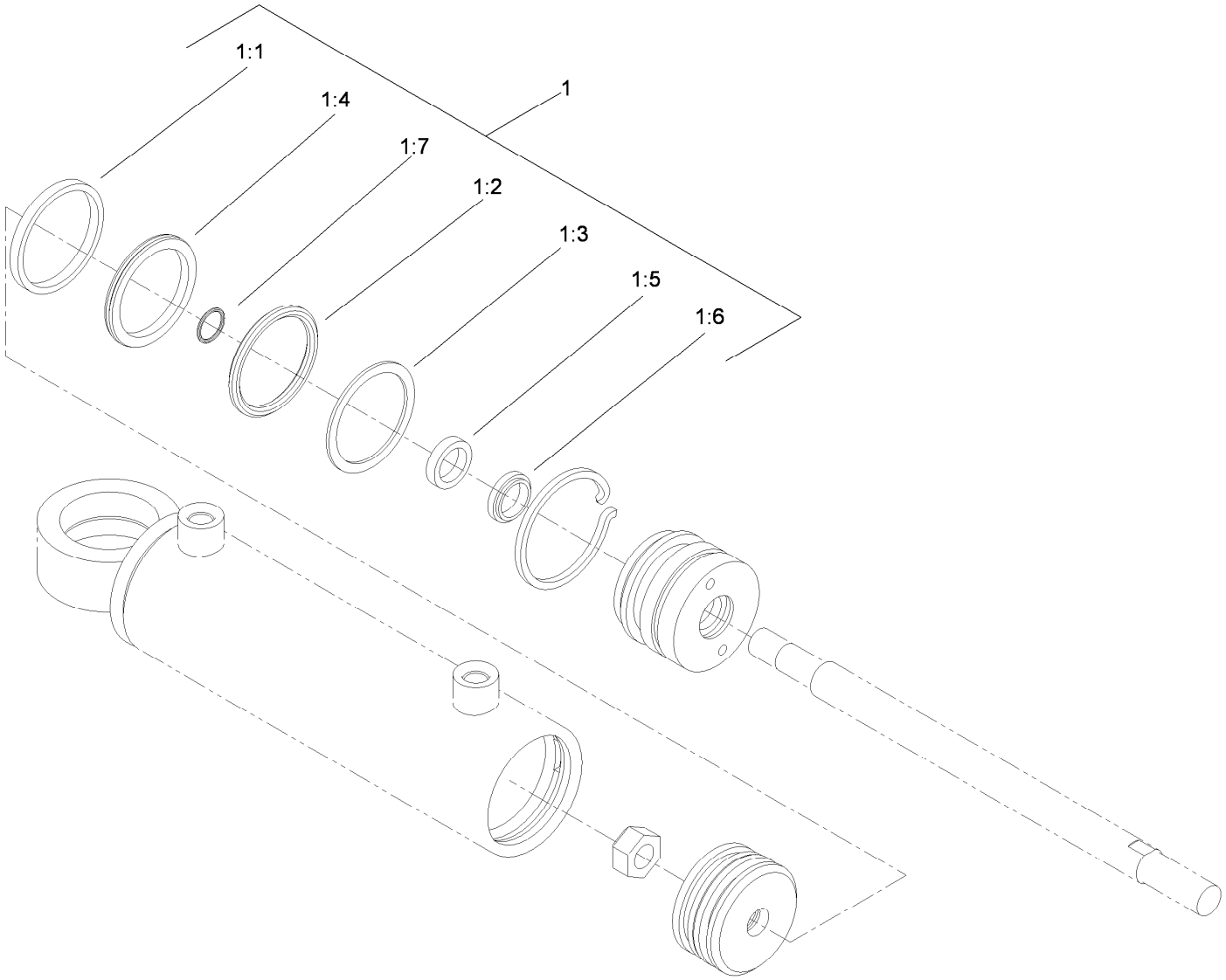

Hydraulic Cylinder Assembly No. 110-9035

Ref.	*Part Number*	*Qty.*	*Description*
1	114-8875	1	Seal Kit
1:1		1	Wear Ring ●
1:2		1	O-Ring ●
1:3		1	Backup ●
1:4		1	Bp Seal ●
1:5		1	Bs Seal ●
1:6		1	Dust Seal ●
1:7		1	O-Ring ●

● Not serviced separately

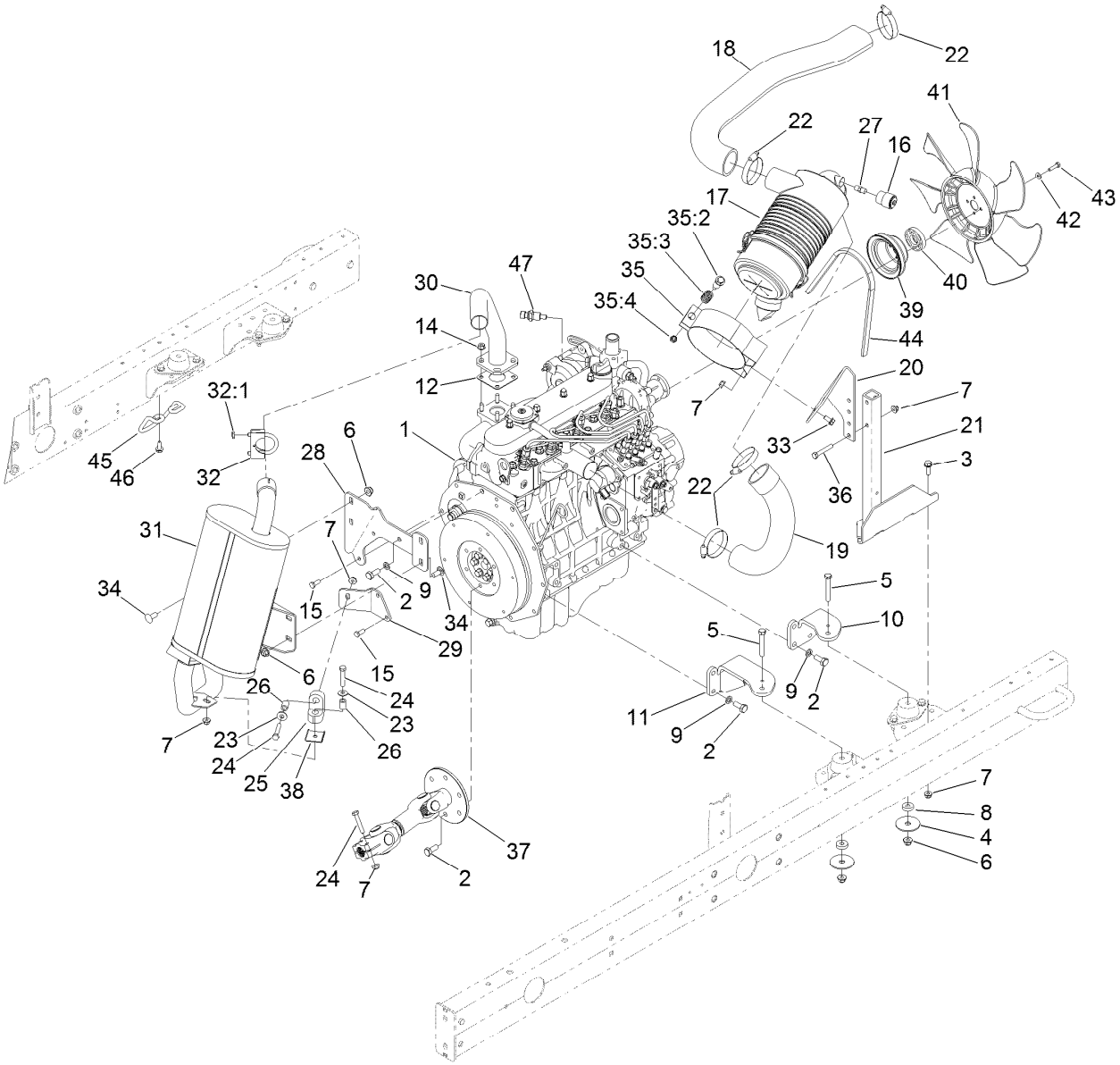

Engine, Muffler and Air Cleaner Assembly

Ref.	Part Number	Qty.	Description
1	132-5206	1	Engine-Kubota, V1505
2	43-0090	19	Screw-HH
3	3234-29	3	Screw-HHF
4	87-5100	4	Washer-Snubbing
5	323-12	4	Screw-HH
6	104-8301	8	Nut-HF, NI
7	104-8300	11	Nut-HF, NI
8	62-6660	4	Spacer
9	48-9590	13	Washer-Lock
10	115-8066-03	2	Mount-Engine
11	120-3812-03	2	Mount-Engine
12	99-8343	1	Gasket-Muffler
14	104-2612	4	Nut-HF
15	33104-020	4	Screw-HHF
16	93-9164	1	Indicator-Mini
17	106-5277	1	Air Cleaner ASM
18	117-5162	1	Hose-Formed
19	117-5164	1	Hose-Formed
20	127-2695-03	1	Bracket-Air Cleaner
21	121-5610-03	1	Stand-Air Cleaner
22	2412-130	4	Clamp-Hose

Ref.	Part Number	Qty.	Description
23	3256-3	2	Washer-Flat
24	322-9	4	Screw-HH
25	95-5622	1	Hanger-Rubber
26	93-5023	2	Spacer
27	94-1416	1	Adapter-Indicator
28	108-1785-03	1	Bracket-Support, Muffler
29	110-8974-03	1	Bracket-Pipe, Tail
30	108-1782	1	Header
31	114-8897	1	Muffler
32	2112-9	1	Clamp
32:1	32128-20	2	Nut-HF
33	3234-14	2	Screw-HHF
34	3231-27	4	Screw-CARR
35	100-4825	1	Band-Mounting, Air Cleaner
35:2	94-3653	1	Bolt
35:3	94-3654	1	Spring
35:4	48-9510	1	Nut
36	322-10	2	Screw-HH
37	108-1641	1	Driveshaft ASM
38	110-8976	1	Plate-Support, Isolator
39	110-0972	1	Pulley

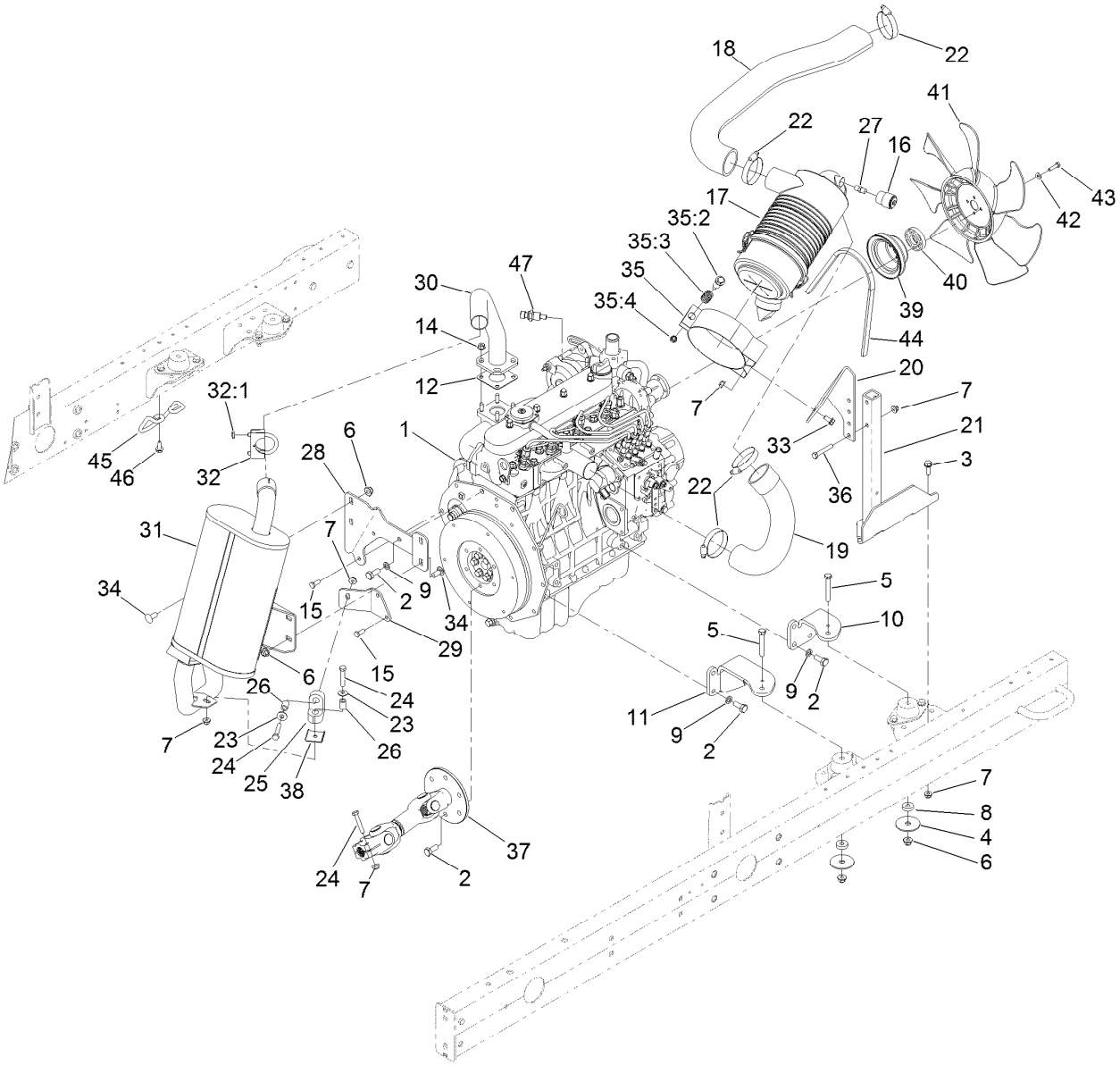

Engine, Muffler and Air Cleaner Assembly (continued)

Ref.	Part Number	Qty.	Description
40	104-4247	1	Spacer-Fan
41	110-0966	1	Fan-Cooling
42	3256-22	4	Washer-Flat
43	33113-025	4	Screw-HH

Ref.	Part Number	Qty.	Description
44	98-9676	1	V-Belt
45	127-2612	1	Guard-Pipe, Tail
46	32104-32	2	Screw-HWH
47	119-4478	1	Sender-Temperature

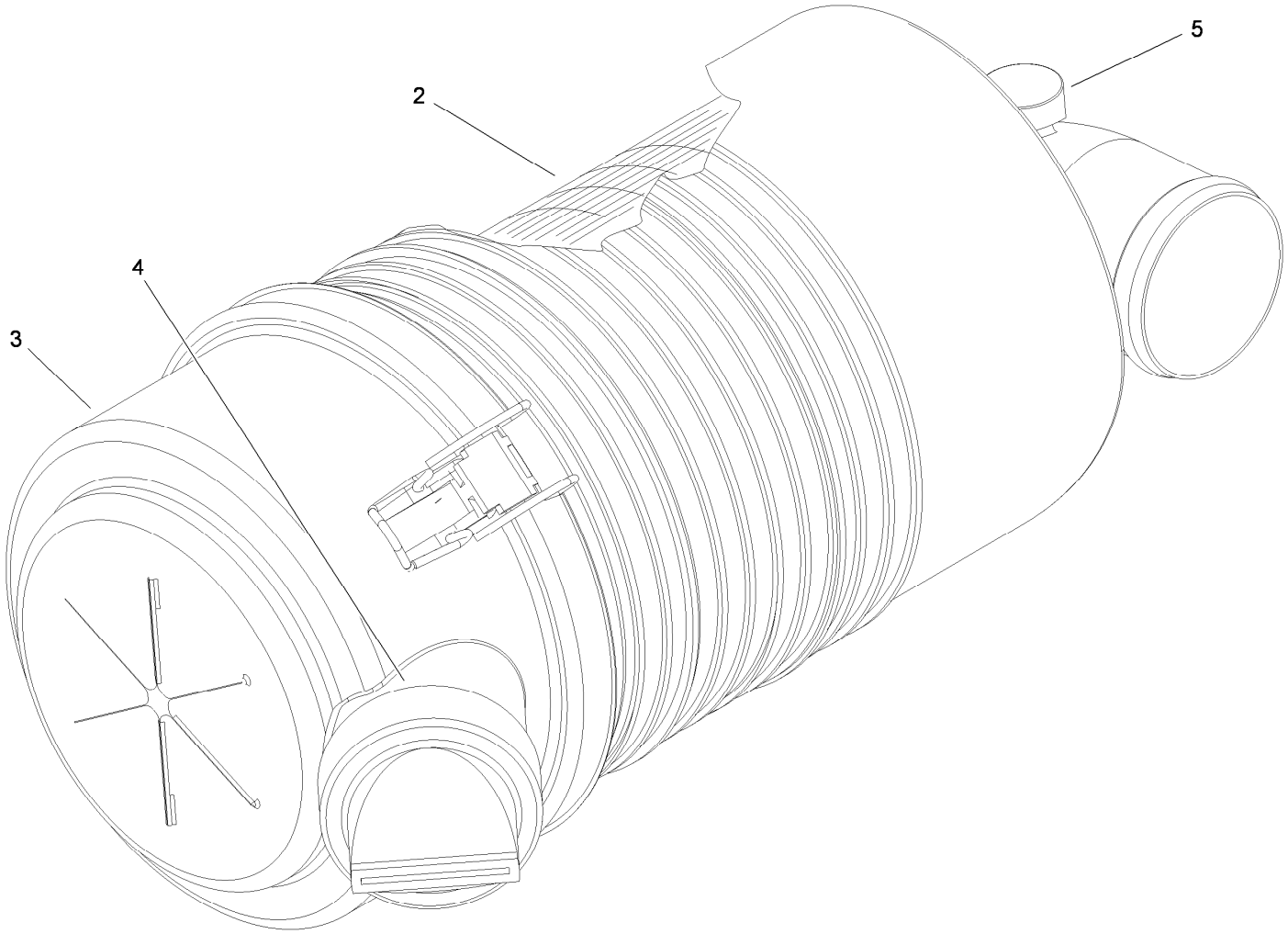

Air Cleaner Assembly No. 106-5277

Ref.	*Part Number*	*Qty.*	*Description*
2	108-3810	1	Filter-Air
3	98-9771	1	Cover ASM
4	87-9400	1	Valve-Vacuator
5	285-17	1	Plug-Pipe

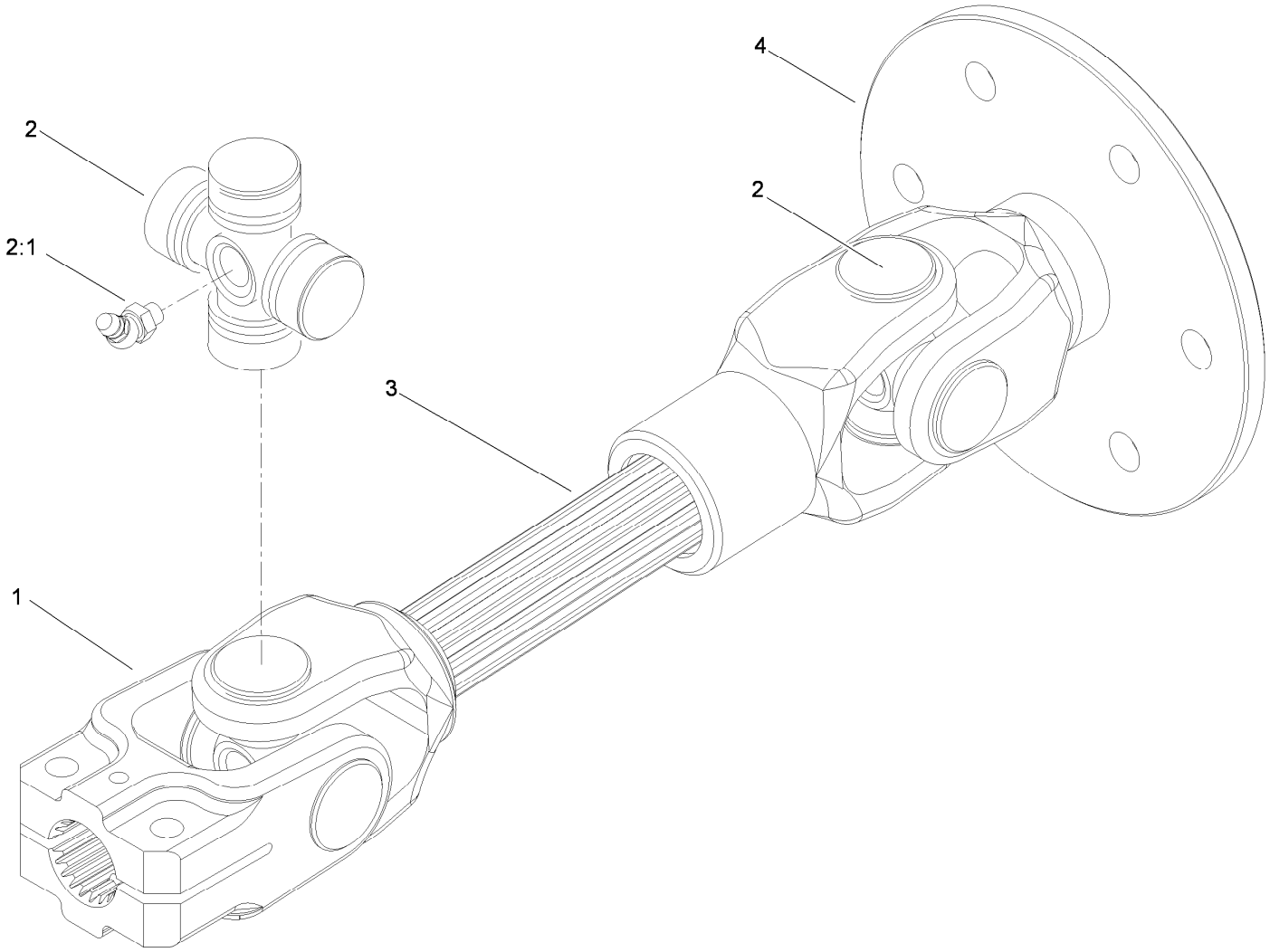

Driveshaft Assembly No. 108-1641

Ref.	*Part Number*	*Qty.*	*Description*
1	54-9040	1	Yoke-End
2	54-9180	2	U-Joint Kit
2:1	62-3820	1	Fitting-Grease
3	108-4574	1	Joint And Shaft ASM
4	108-4575	1	Joint And Yoke ASM

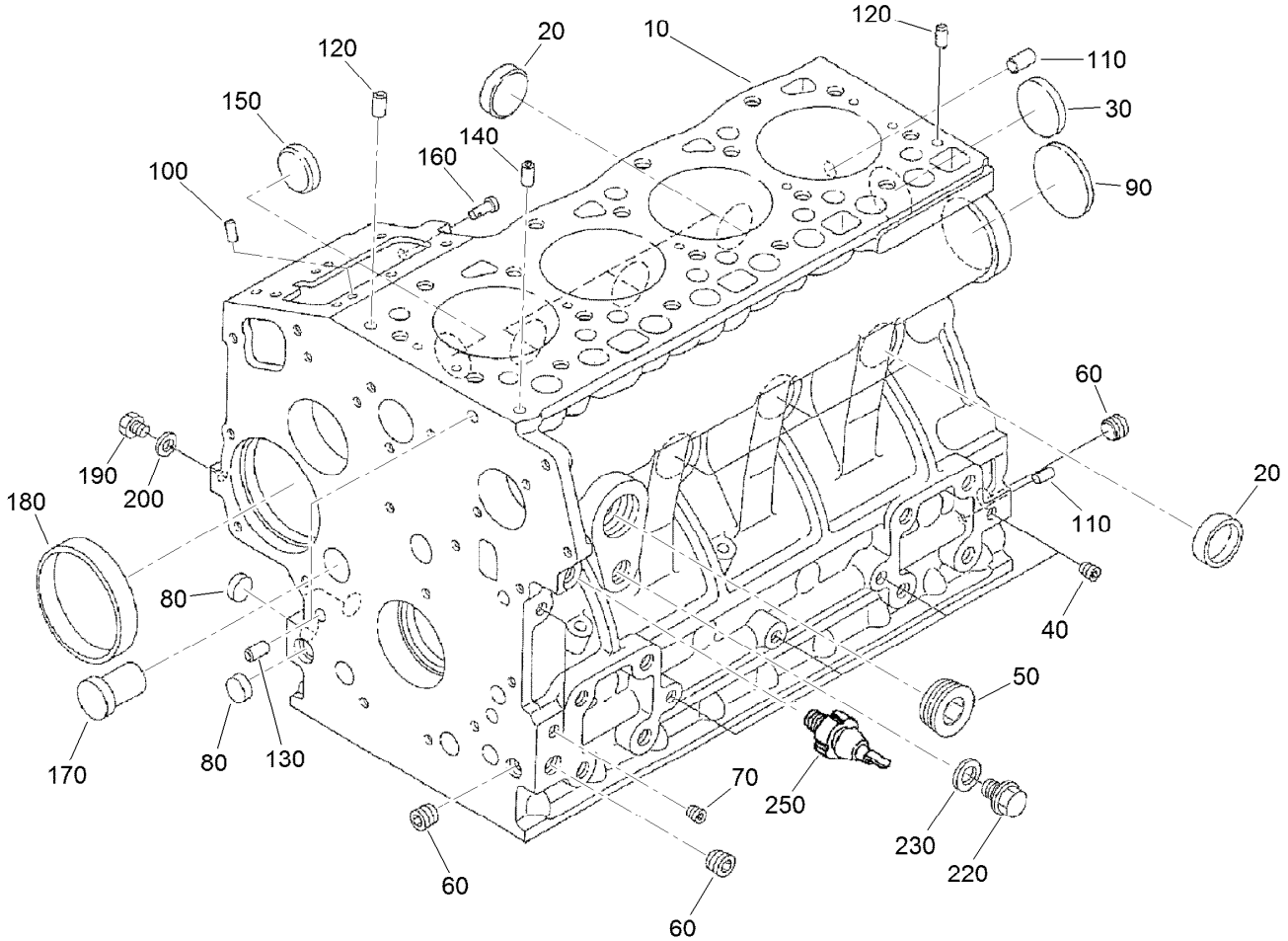

Crankcase Assembly

Ref.	Part Number	Qty.	Description
10	120-2558	1	Crankcase ASM
20	98-9398	6	Cap-Sealing
30	98-7539	1	Cap-Sealing
40	98-9687	4	Plug
50	105-3779	1	Plug
60	98-9597	3	Plug
70	98-7487	2	Plug
80	98-9379	3	Plug-Expansion
90	98-9668	1	Plug-Expansion
100	98-9375	2	Pin-Straight
110	98-9377	2	Pin-Straight
120	98-9376	2	Pin-Straight

Ref.	Part Number	Qty.	Description
130	98-9387	2	Pin-Pipe
140	98-9539	1	Pin-Pipe
150	98-9599	1	Plug
160	105-3796	1	Pin-Spring, Start
170	98-9675	1	Plug
180	98-9656	1	Bushing-Governor, Gear
190	98-7507	1	Plug
200	98-7428	1	Gasket
220	99-3447	1	Plug
230	106-7056	1	Gasket
250	98-9416	1	Switch-Oil

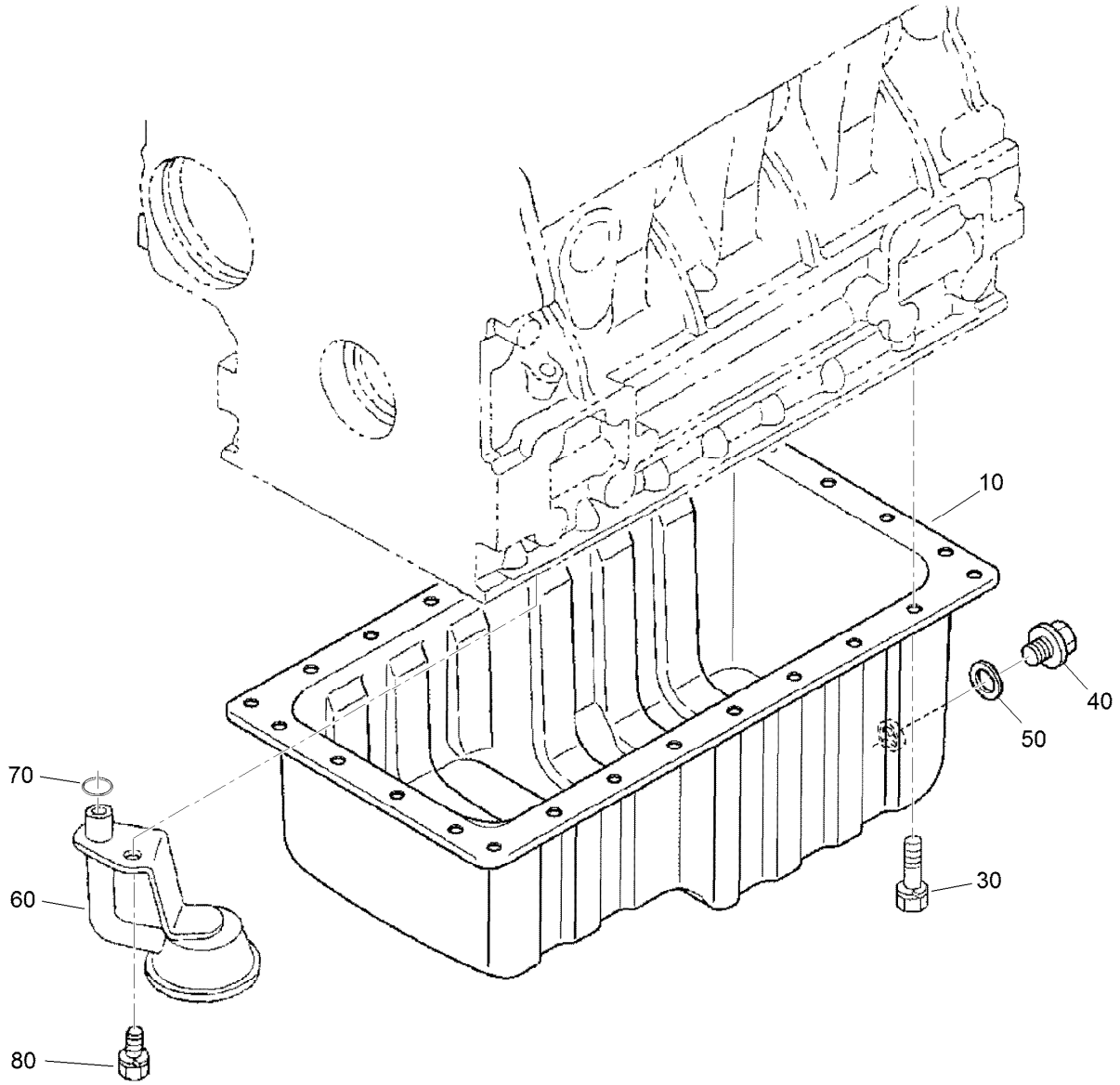

Oil Pan Assembly

Ref.	Part Number	Qty.	Description
10	112-0186	1	Oil Pan ASM
30	98-9351	26	Bolt
40	114-8151	1	Plug-Drain
50	98-7524	1	Gasket
60	112-7003	1	Head-Filter, Oil
70	105-3776	1	O-Ring
80	98-7526	1	Bolt

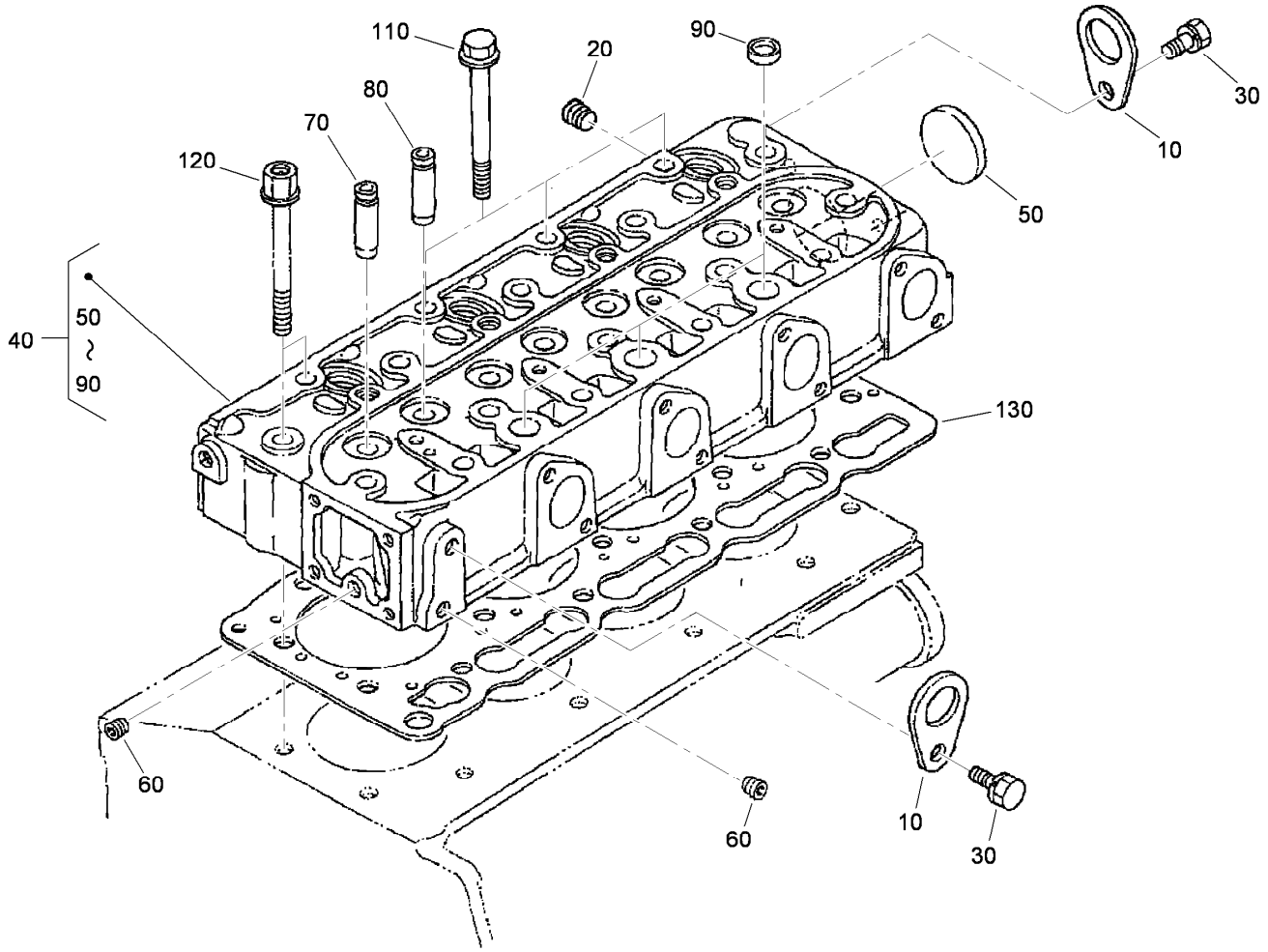

Cylinder Head Assembly

Ref.	*Part Number*	*Qty.*	*Description*
10	98-7531	2	Hook-Engine
20	98-9444	1	Plug
30	100-9195	2	Bolt
40	115-3012	1	Cylinder Head ASM
50	105-3705	1	Cap-Sealing
60	98-9687	2	Plug
70	107-9066	4	Guide-Valve, Inlet
80	107-9067	4	Guide-Valve, Exhaust
90	98-9389	3	Cap-Sealing
110	98-9479	16	Bolt-Head, Cylinder
120	98-9647	2	Bolt-Head, Cylinder
130	108-2855	1	Gasket-Head, Cylinder

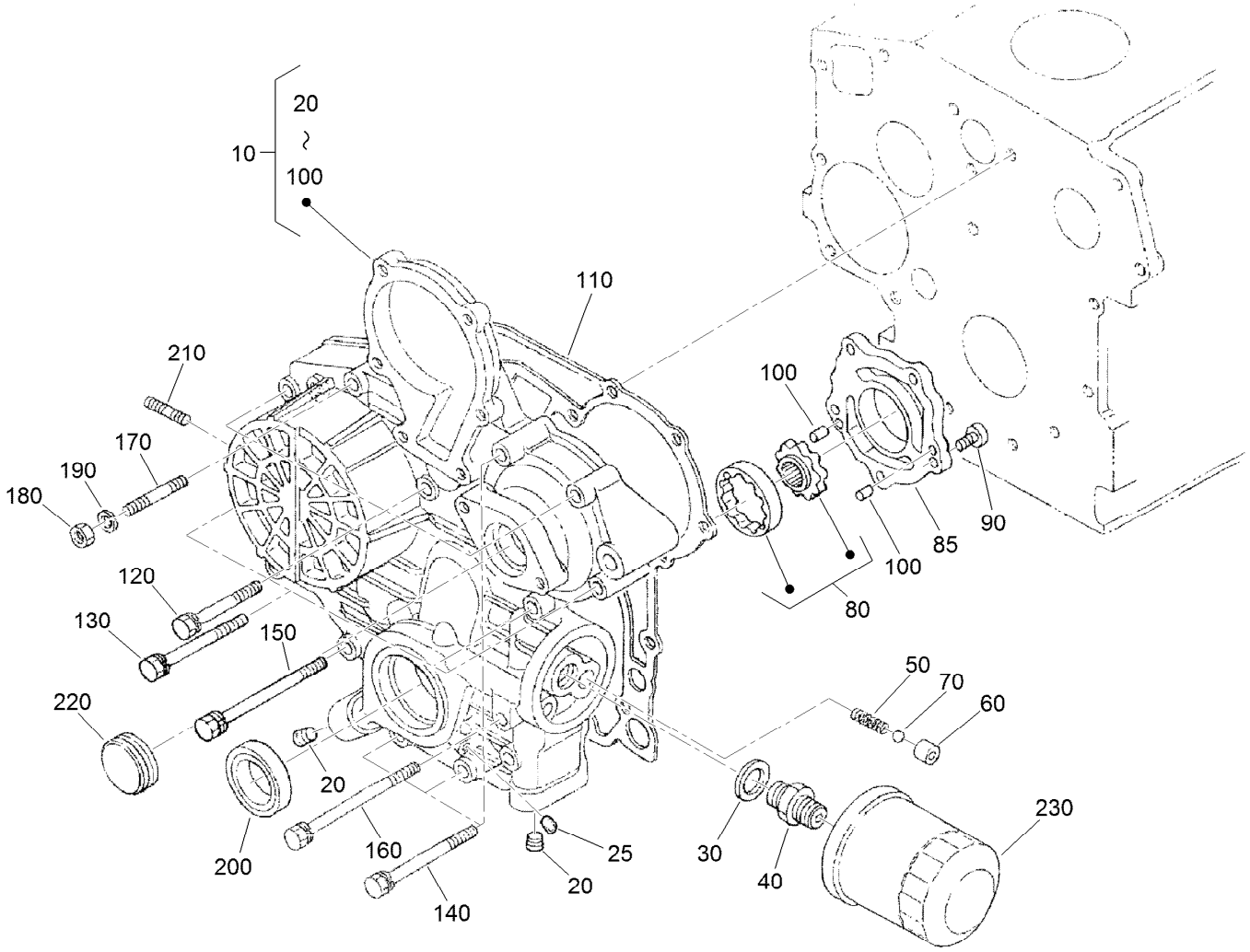

Gear Case Assembly

Ref.	Part Number	Qty.	Description
10	115-4111	1	Gear Case ASM
20	127-0425	2	Plug
25	98-7487	1	Plug
30	98-7562	1	Washer-Plain
40	98-9388	1	Joint-Pipe
50	98-9544	1	Spring
60	98-9543	1	Seat-Valve
70	98-9380	1	Ball
80	98-9540	1	Oil Pump Rotor ASM
85	107-9069	1	Cover-Pump, Oil
90	107-9071	5	Screw
100	107-9072	2	Pin-Straight
110	98-9633	1	Gasket-Case, Gear

Ref.	Part Number	Qty.	Description
120	100-1765	3	Bolt
130	105-3797	4	Bolt
140	98-9356	4	Bolt
150	107-9074	1	Bolt
160	98-9586	1	Bolt
170	105-3709	1	Stud
180	98-7572	1	Nut
190	98-7699	1	Washer-Spring
200	98-9482	1	Seal-Oil
210	105-3710	2	Stud
220	99-3515	1	Plug-Gearcase
230	108-3841	1	Filter-Oil

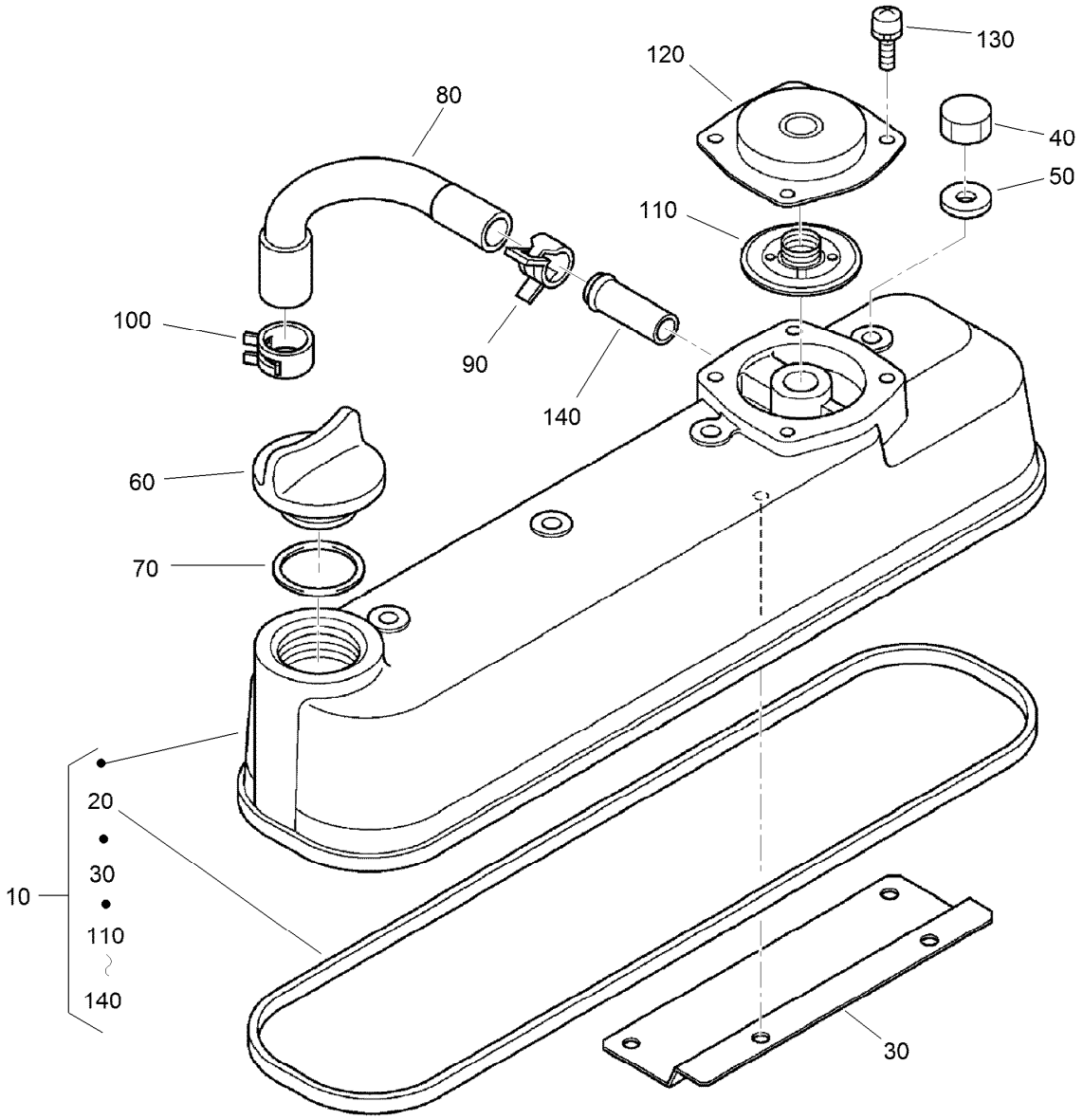

Cylinder Head Cover Assembly

Ref.	Part Number	Qty.	Description
10	115-4130	1	Cylinder Head Cover ASM
20	105-3712	1	Gasket-Cover, Head
30	108-2857	1	Shield-Breather
40	98-9455	4	Nut-Cap
50	98-9454	4	Gasket
60	107-9075	1	Plug-Filler, Oil
70	99-3446	1	O-Ring
80	108-2858	1	Tube-Breather
90	108-2859	1	Clamp-Hose
100	108-2860	1	Clamp-Hose
110	110-3715	1	Valve-Breather
120	110-3714	1	Cover-Breather
130	98-9364	4	Screw (With Washer)
140	98-7766	1	Pipe-Return, Water

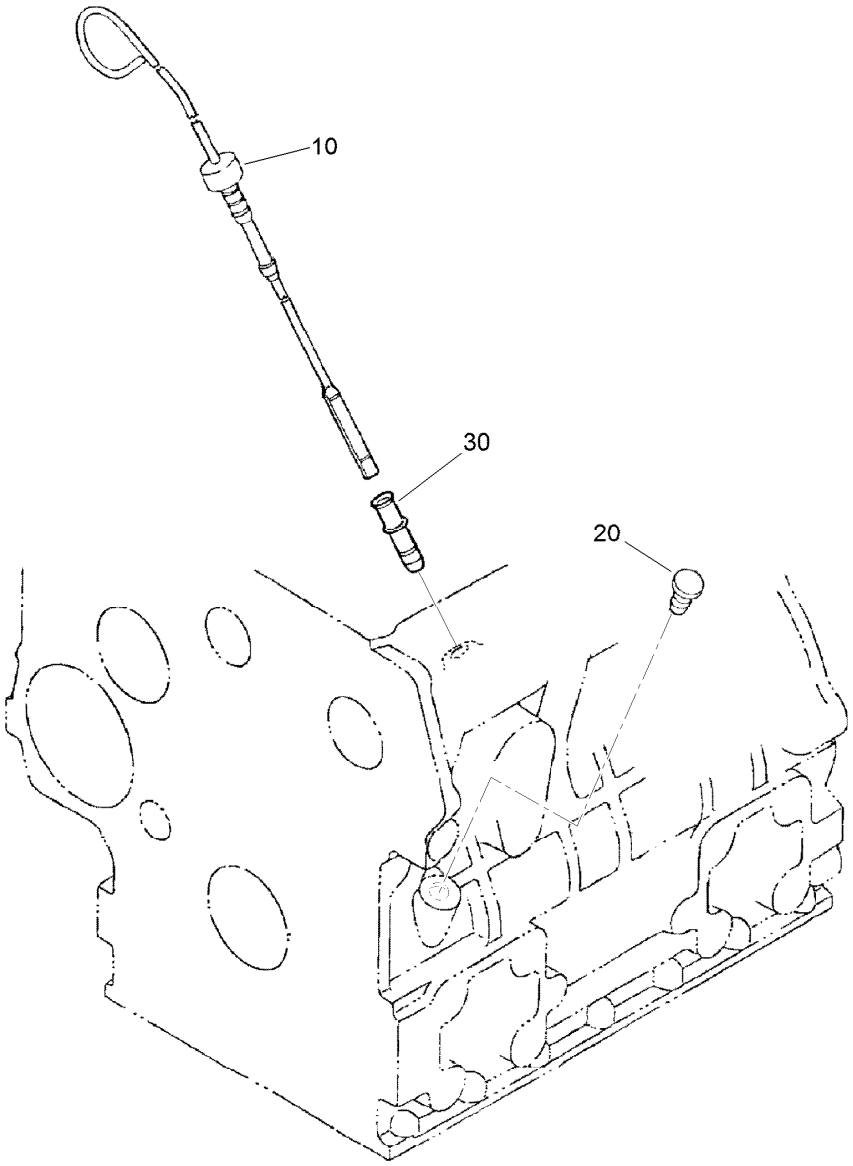

Dipstick and Guide Assembly

Ref.	*Part Number*	*Qty.*	*Description*
10	105-3714	1	Gauge-Oil
20	105-4580	1	Guide-Gauge, Oil
30	110-3720	1	Plug-Gauge, Oil

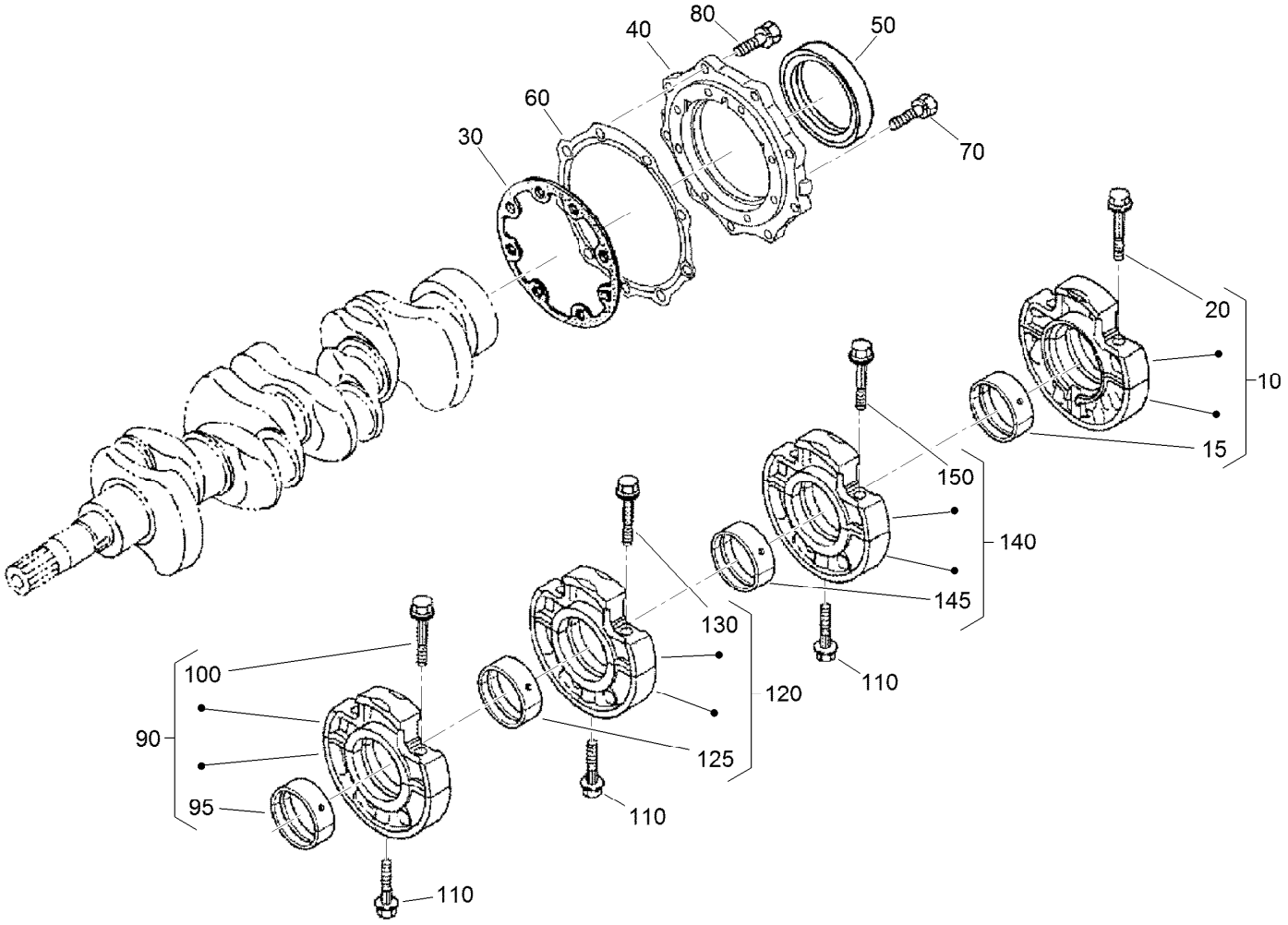

Main Bearing Case Assembly

Ref.	Part Number	Qty.	Description
10	112-7026	1	Wheel Bearing Case ASM
15	112-7045	1	Metal-Crankshaft
20	98-9484	2	Bolt-Case, Bearing
30	98-9634	1	Gasket-Case, Bearing
40	112-7046	1	Cover-Case, Bearing
50	112-0180	1	Seal-Oil
60	112-7037	1	Gasket-Cover, Case
70	98-9352	8	Bolt
80	98-7568	9	Bolt
90	115-4106	1	Main Bearing Case ASM

Ref.	Part Number	Qty.	Description
95	98-9524	1	Metal-Crankshaft (STD Set)
100	98-9484	2	Bolt-Case, Bearing
110	98-9485	3	Bolt-Case, Bearing
120	115-4107	1	Main Bearing Case ASM
125	115-4106	1	Main Bearing Case ASM
130	98-9484	2	Bolt-Case, Bearing
140	130-1265	1	Main Bearing Case ASM
145	115-4106	1	Main Bearing Case ASM
150	98-9484	2	Bolt-Case, Bearing

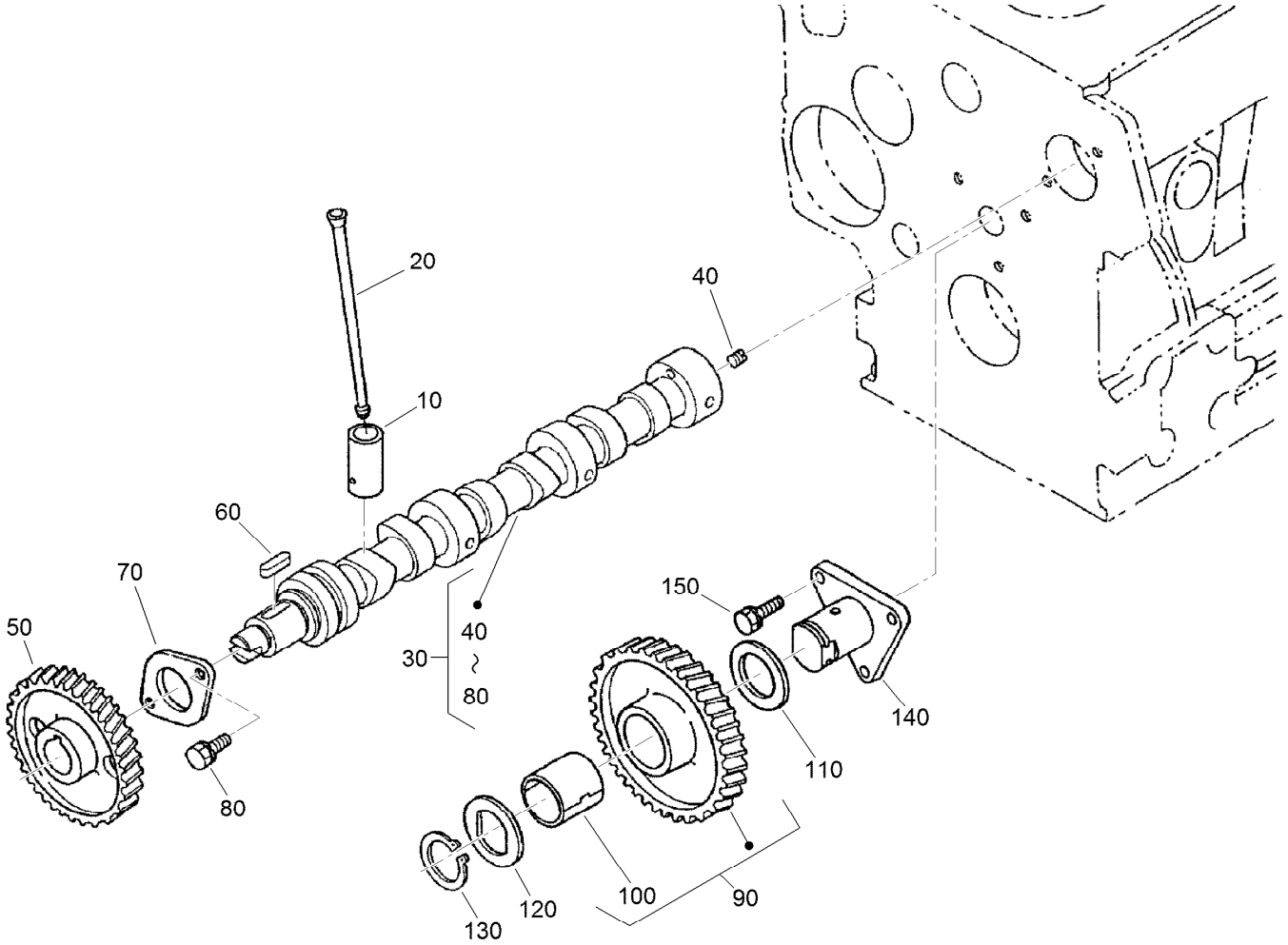

Cam Shaft and Idle Gear Assembly

Ref.	Part Number	Qty.	Description
10	112-0185	8	Tappet
20	98-9509	8	Rod-Push
30	115-4128	1	Camshaft ASM
40	98-7449	1	Screw-Set
50	98-9512	1	Gear-Cam
60	98-9378	1	Key-Feather
70	98-9510	1	Stopper-Camshaft
80	98-7692	2	Bolt
90	98-9649	1	Idle Gear ASM
100	98-9650	1	Bushing-Gear, Idle
110	98-9535	1	Collar-Gear, Idle
120	98-9536	1	Collar-Gear, Idle
130	98-9534	1	Circlip-Gear, Idle
140	98-9533	1	Shaft-Gear, Idle
150	98-7692	3	Bolt

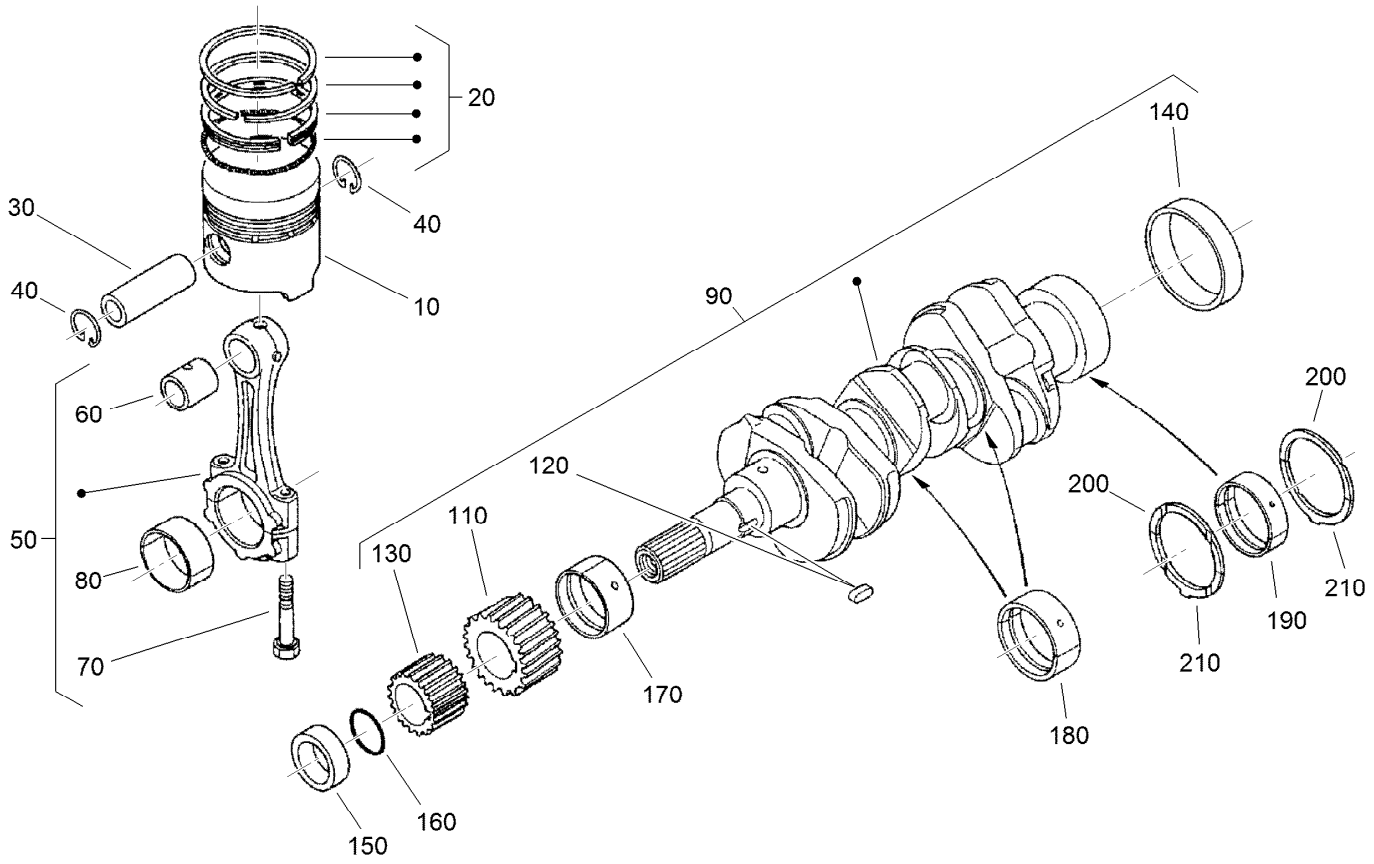

Piston and Crankshaft Assembly

Ref.	Part Number	Qty.	Description
10	112-8404	4	Piston (STD)
10	112-8414	4	Piston (+0.5Mm)
20	98-9551	4	Piston Ring ASM (STD)
20	108-1404	4	Piston Ring ASM (+0.5MM)
30	98-9513	4	Pin-Piston
40	98-9514	8	Circlip-Pin, Piston
50	117-7586	4	Connecting Rod ASM
60	115-3014	4	Bushing-Pin, Piston
70	98-9517	8	Bolt-Rod, Connecting
80	98-9520	4	Bearing-Rod (0.4MM)
80	98-9519	4	Bearing-Rod (-0.2MM)
80	98-9518	4	Metal-Crankpin (STD)
90	105-3718	1	Crankshaft ASM
110	98-9532	1	Gear-Crankshaft
120	98-9666	1	Key
130	98-9542	1	Gear-Drive, Oil Pump
140	98-9522	1	Sleeve-Crankshaft

Ref.	Part Number	Qty.	Description
150	98-9521	1	Collar-Crankshaft
160	105-3783	1	O-Ring
170	98-9523	1	Metal Crankshaft (STD)
170	98-9528	1	Bearing-Main (-0.2MM)
170	98-9529	1	Bearing-Main (0.4MM)
180	98-9524	3	Metal-Crankshaft (STD Set)
180	127-0433	3	Metal-Crankshaft (-0.2MM)
180	98-9531	3	Bearing-Main (0.4MM)
190	112-7006	1	Bearing-Main (STD)
190	112-7007	1	Metal-Crankshaft (.2MM)
190	112-7008	1	Metal-Crankshaft (.4MM)
200	112-7045	2	Metal-Crankshaft
200	112-7039	2	Metal-Crankshaft (0.2Mm)
200	112-7040	2	Metal-Crankshaft (-0.4Mm)
210	98-9688	2	Bearing-Thrust (STD)
210	127-0437	2	Metal-Side (+0.2MM)
210	98-9690	2	Bearing-Thrust (0.4MM)

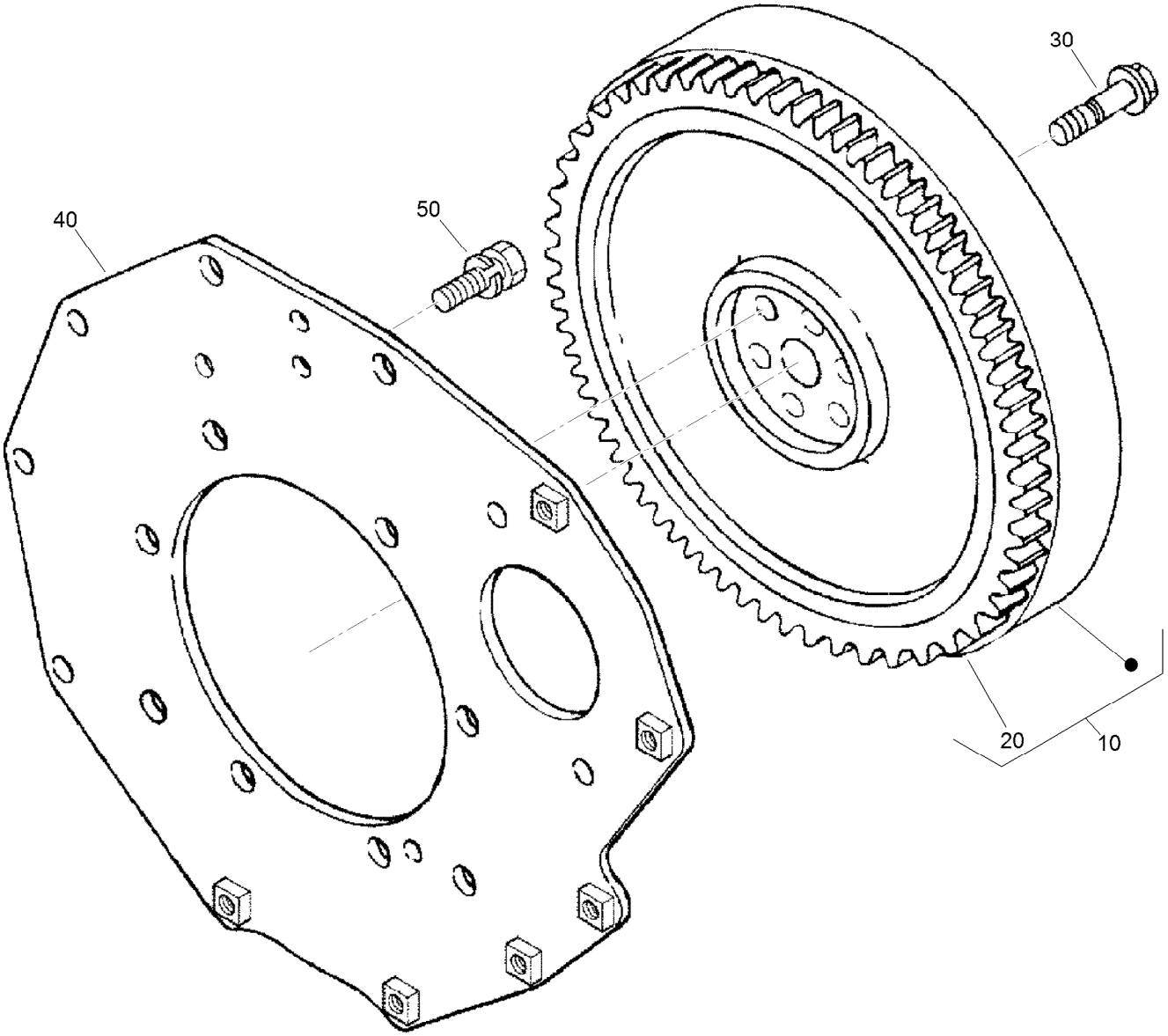

Flywheel Assembly

Ref.	Part Number	Qty.	Description
10	105-3721	1	Flywheel ASM
20	115-3015	1	Gear-Ring
30	98-9537	6	Bolt-Flywheel
40	98-9486	1	Plate-End, Rear
50	98-9392	8	Bolt

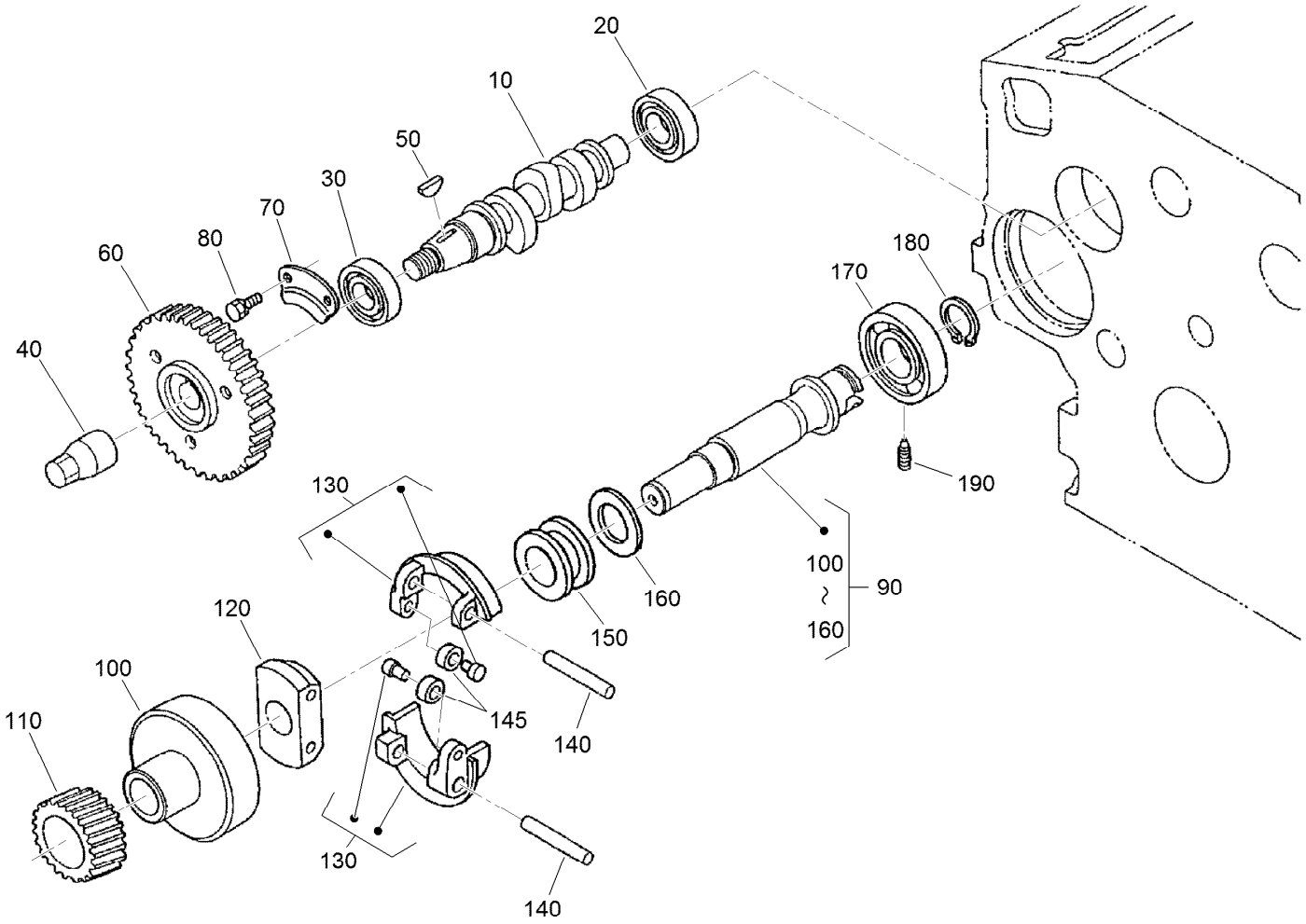

Fuel Camshaft and Governor Shaft Assembly

Ref.	Part Number	Qty.	Description
10	105-3723	1	Camshaft-Fuel
20	107-9077	1	Bearing-Ball
30	107-9078	1	Bearing-Ball
40	98-9590	1	Nut-Cap
50	98-9595	1	Key-Woodruff
60	98-9669	1	Gear-Pump, Injection
70	98-9511	1	Stopper-Fuel, Camshaft
80	98-7692	2	Bolt
90	105-3724	1	Governor Shaft ASM
100	98-9562	1	Holder-Gear, Governor

Ref.	Part Number	Qty.	Description
110	98-9673	1	Gear-Governor
120	98-9561	1	Holder-Weight, Governor
130	98-9559	2	Governor Weight ASM
140	98-9560	2	Shaft-Weight, Governor
145	98-9692	2	Roller
150	98-9563	1	Sleeve-Governor
160	98-9564	1	Washer-Thrust
170	107-9079	1	Bearing-Ball
180	98-9657	1	Circlip-Shaft, Governor
190	98-9565	1	Screw-Set

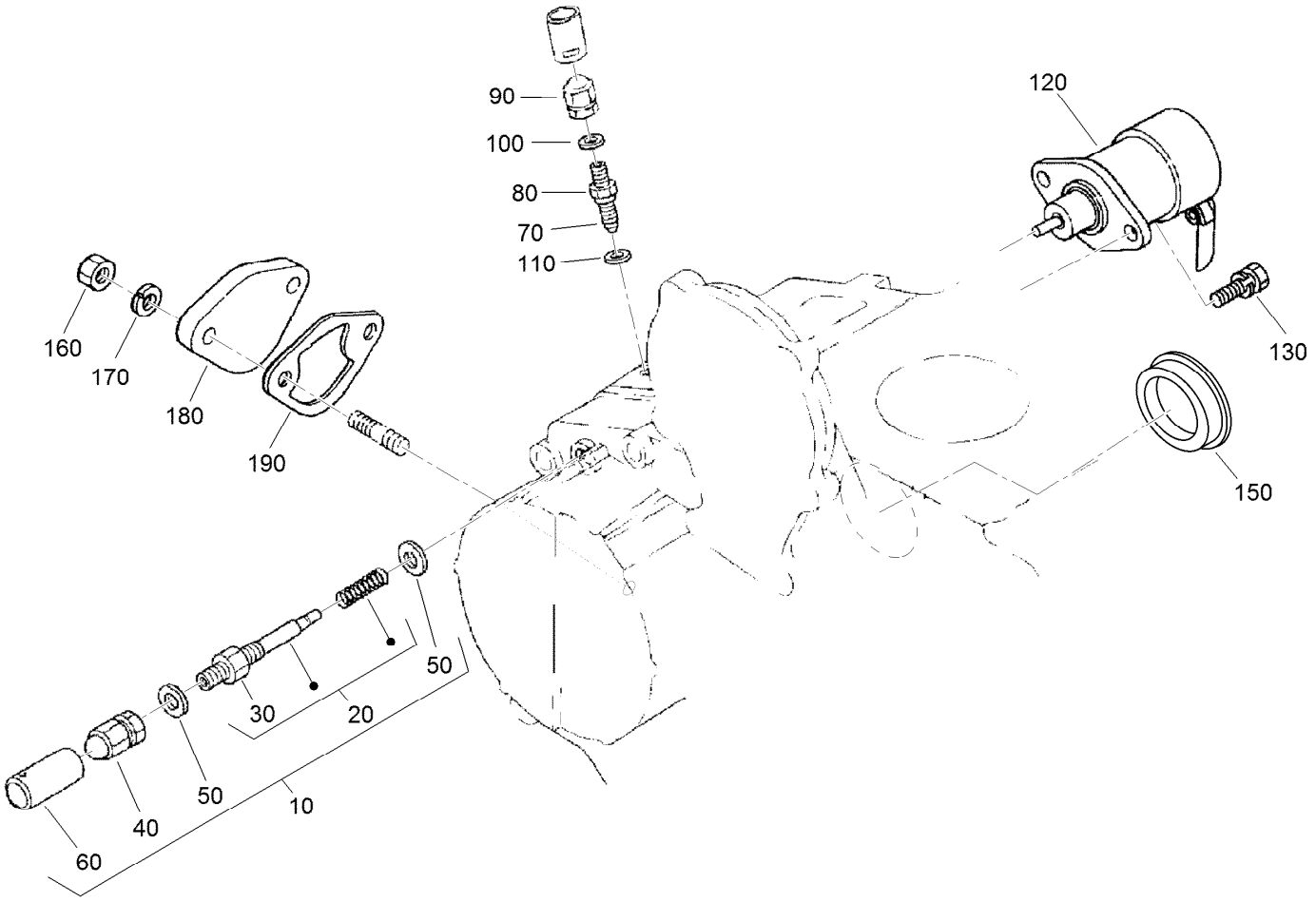

Idle Apparatus Assembly

Ref.	*Part Number*	*Qty.*	*Description*
10	98-9678	1	Idle Apparatus ASM
20	112-7014	1	Adjusting Bolt ASM
30	98-9439	1	Nut
40	112-0181	1	Nut
50	98-7654	2	Gasket
60	98-7656	1	Cap
70	112-7015	1	Bolt-Adjusting
80	100-2175	1	Nut-Lock
90	112-0181	1	Nut
100	98-7654	1	Gasket
110	107-9081	1	Gasket
120	104-5155	1	Solenoid-Stop
130	115-3039	2	Bolt-HSH
150	112-7016	1	Cover-Pump
160	98-7572	2	Nut
170	98-7699	2	Washer-Spring
180	99-3514	1	Cover
190	98-9636	1	Gasket-Pump, Fuel

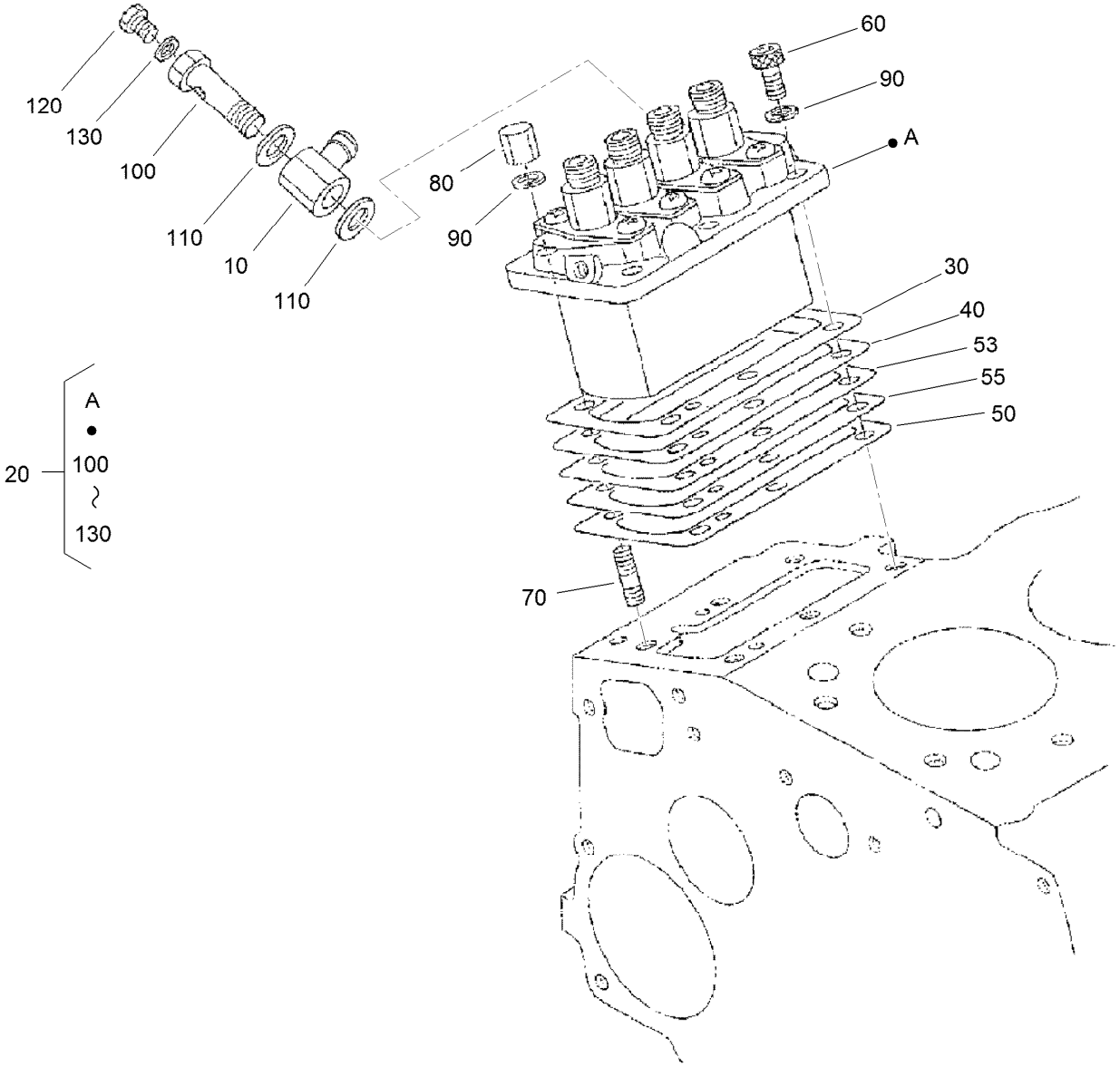

Injection Pump Assembly

Ref.	Part Number	Qty.	Description
10	98-9596	1	Joint-Eye
20	105-3727	1	Injection Pump ASM
30	105-3728	1	Shim-Pump, Injection (.20MM)
40	105-3729	1	Shim-Pump, Injection (.25MM)
50	105-3730	1	Shim-Pump, Injection (.30MM)
53	115-3016	1	Shim-Pump, Injection (.350MM)
55	115-3017	1	Shim-Pump, Injection (.175MM)
60	98-9361	3	Bolt-HSH
70	98-9438	3	Stud
80	98-9440	3	Nut-Cap
90	98-7699	6	Washer-Spring
100	98-9464	1	Bolt-Joint
110	98-9445	2	Gasket
120	98-9430	1	Screw
130	98-9446	1	Gasket

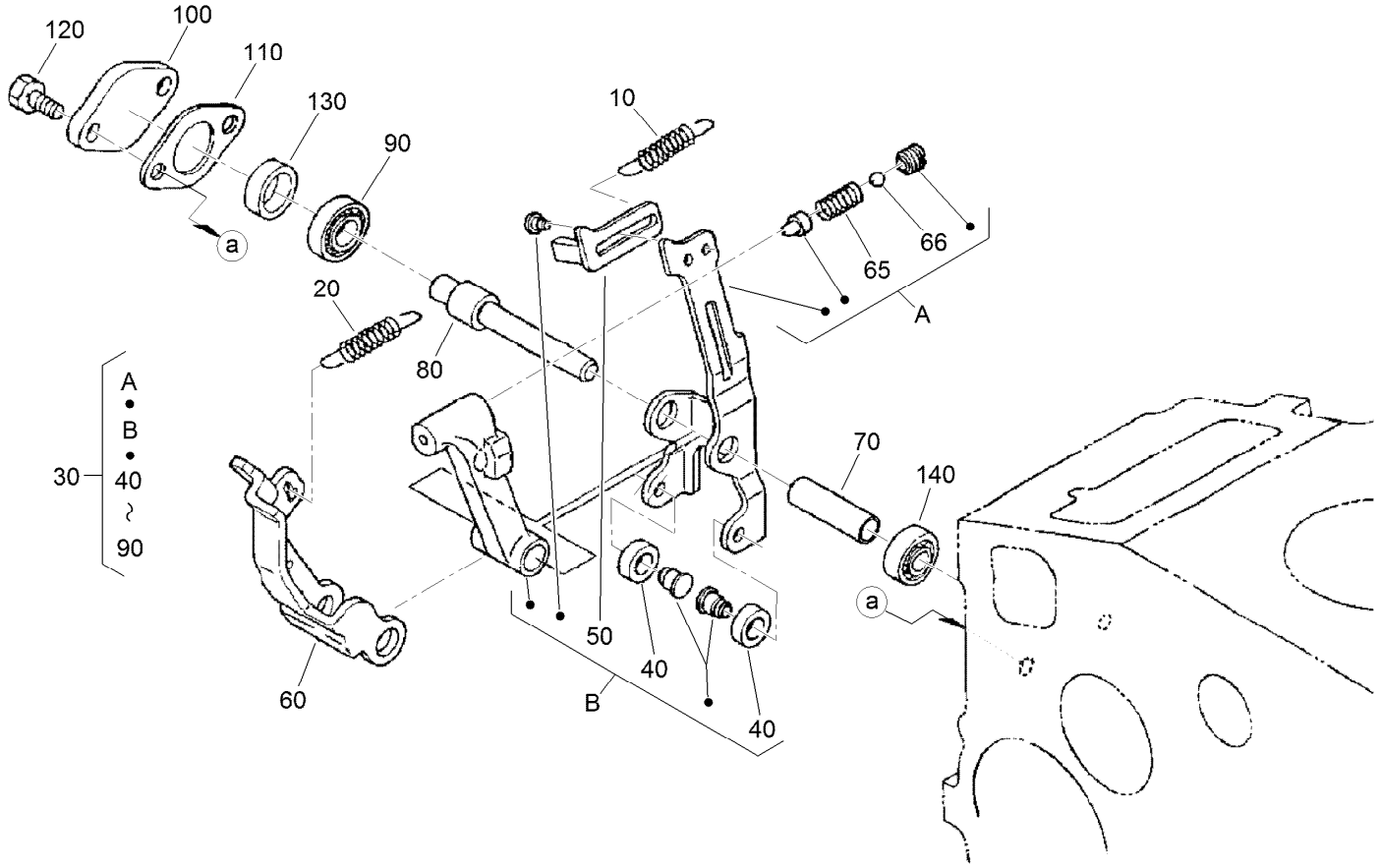

Governor Assembly

Ref.	Part Number	Qty.	Description
10	105-3741	1	Spring-Start
20	98-9681	1	Spring-Governor
30	115-4502	1	Fork Lever ASM
40	98-9692	2	Roller
50	107-9083	1	Lever-Thrust
60	107-9084	1	Lever-Fork
65	108-2867	1	Spring
66	98-7580	2	Ball

Ref.	Part Number	Qty.	Description
70	107-9085	1	Shaft-Lever, Fork
80	107-9086	1	Shaft-Lever, Fork
90	98-9570	1	Bearing-Miniaturize
100	115-4122	1	Cover-Shaft, Fork Lever
110	98-9682	1	Gasket
120	98-9350	2	Bolt
130	98-9567	1	Collar
140	98-9571	1	Bearing-Miniaturize

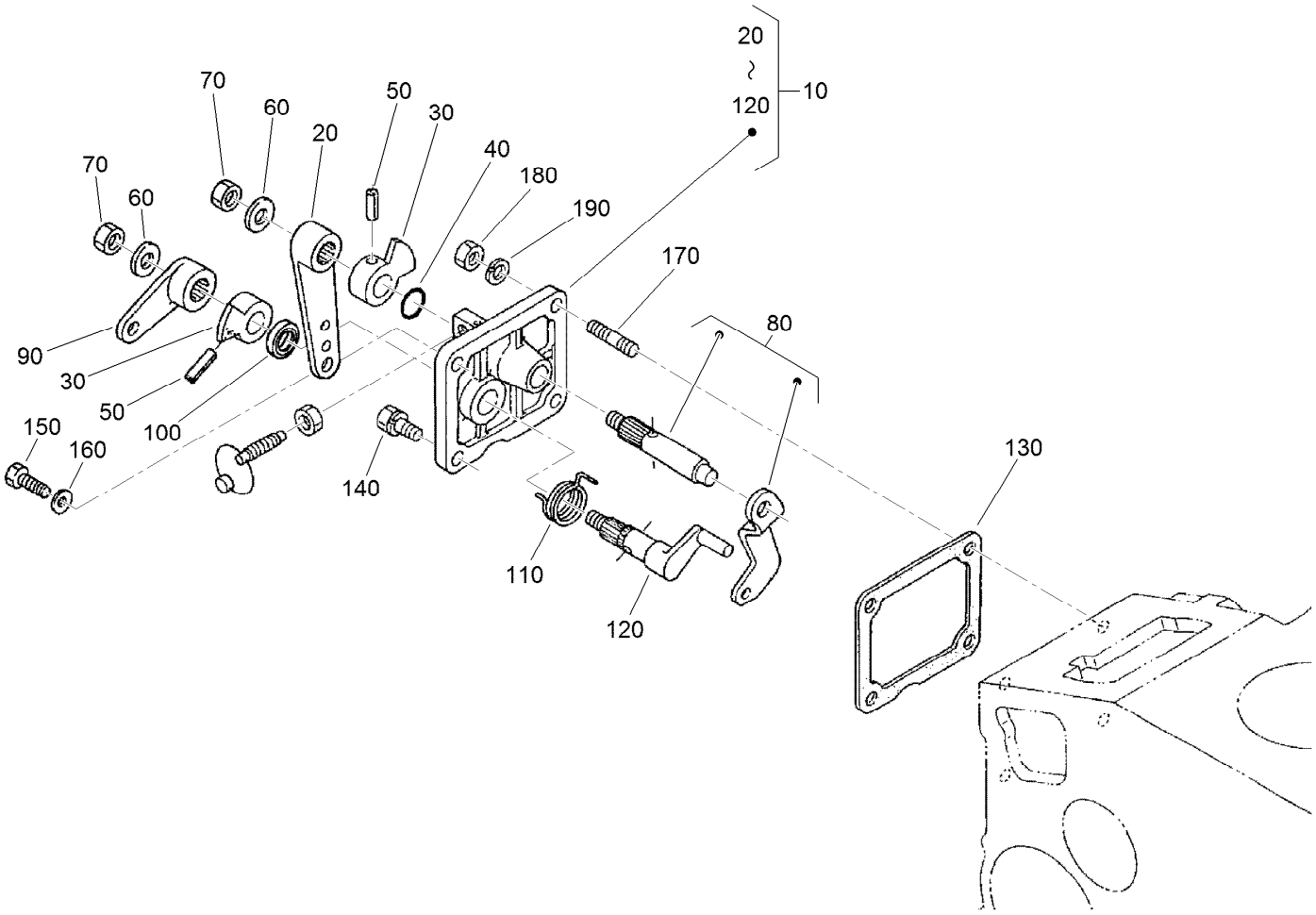

Speed Control Plate Assembly

Ref.	Part Number	Qty.	Description
10	105-3735	1	Control Plate ASM
20	98-9662	1	Lever-Control, Speed
30	98-9572	2	Lever-Control, Speed
40	105-3788	1	O-Ring
50	98-7602	2	Pin-Spring
60	98-9594	2	Washer-Plain
70	98-9589	2	Nut
80	98-9658	1	Governor Lever ASM
90	98-9663	1	Lever-Stop, Engine
100	98-7601	1	Seal-Oil

Ref.	Part Number	Qty.	Description
110	98-9472	1	Spring-Return
120	98-9664	1	Shaft-Lever, Stop
130	98-9637	1	Gasket
140	98-7692	1	Bolt
150	99-8348	1	Bolt
160	98-7654	2	Gasket
170	105-3710	2	Stud
180	98-7572	2	Nut
190	98-7699	2	Washer-Spring

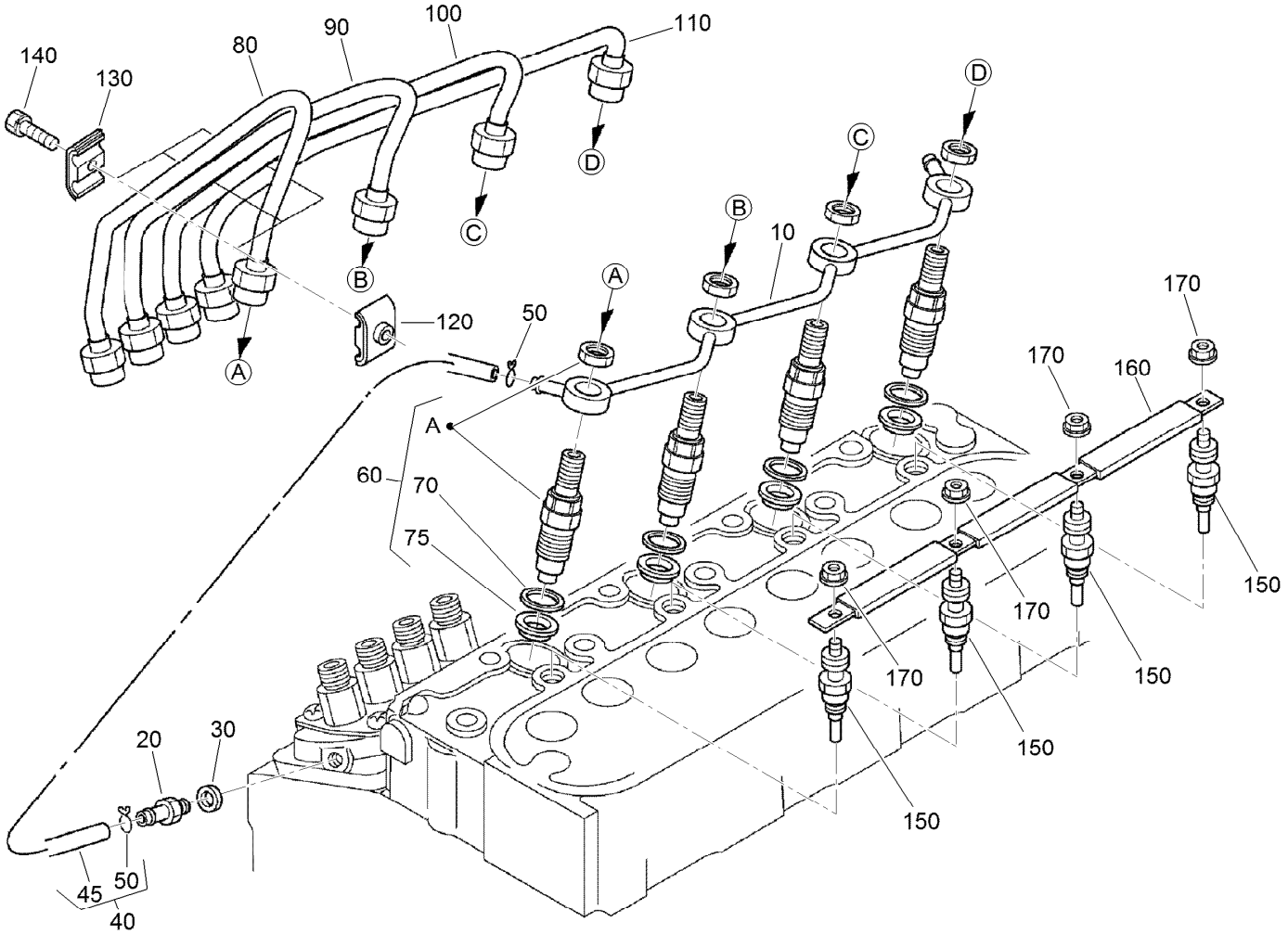

Nozzle Holder and Glow Plug Assembly

Ref.	Part Number	Qty.	Description
10	105-3737	1	Over Flow Pipe ASM
20	98-9431	1	Screw-Bleeder, Air
30	98-7654	1	Gasket
40	98-9420	1	Overflow Pipe ASM
45	112-0182	1	Pipe-Overflow
50	98-7671	2	Clip-Pipe
60	115-3018	4	Nozzle Holder Kit
70	98-7676	4	Gasket
75	98-7677	4	Seal-Heat
80	98-9653	1	Pipe-Injection

Ref.	Part Number	Qty.	Description
90	98-9654	1	Pipe-Injection
100	98-9655	1	Pipe-Injection
110	105-3738	1	Pipe-Injection
120	98-7682	3	Clamp-Pipe
130	98-7683	3	Clamp-Pipe
140	98-7684	3	Screw (W/Washer)
150	115-3019	4	Plug-Glow
160	105-3739	1	Cord-Plug, Glow
170	99-8377	4	Nut-Flange

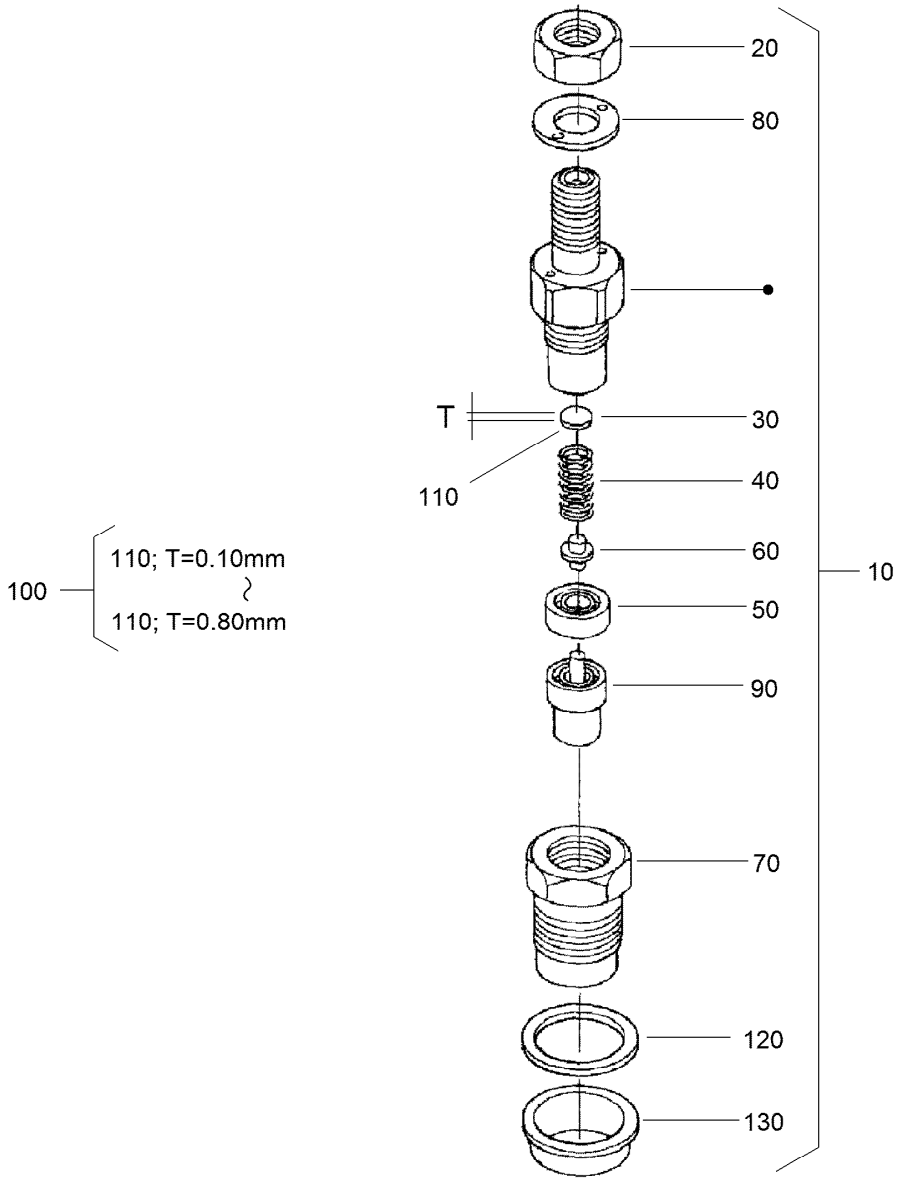

Nozzle Holder Component Assembly

Ref.	Part Number	Qty.	Description
10	115-3018	4	Nozzle Holder Kit
20	99-8301	4	Nut
30	99-8302	4	Washer-Adjusting
40	99-8303	4	Spring-Nozzle
50	99-8304	4	Spacer-Distance
60	99-8305	4	Rod-Push
70	99-8306	4	Nut-Nozzle
80	99-8307	4	Washer-Plain
90	115-3020	4	Piece-Nozzle
100	99-8309	4	Adjusting Washer ASM
110	99-8310	4	Washer-Adjust (0.10MM)

Ref.	Part Number	Qty.	Description
110	99-8311	4	Washer-Adjust (0.20MM)
110	99-8312	4	Washer-Adjust (0.30MM)
110	99-8313	4	Washer-Adjust (0.40MM)
110	99-8314	4	Washer-Adjust (0.50MM)
110	99-8315	4	Washer-Adjust (0.52MM)
110	99-8316	4	Washer-Adjust (0.54MM)
110	99-8317	4	Washer-Adjust (0.56MM)
110	99-8318	4	Washer-Adjust (0.58MM)
110	99-8319	4	Washer-Adjust (0.80MM)
120	98-7676	4	Gasket
130	98-7677	4	Seal-Heat

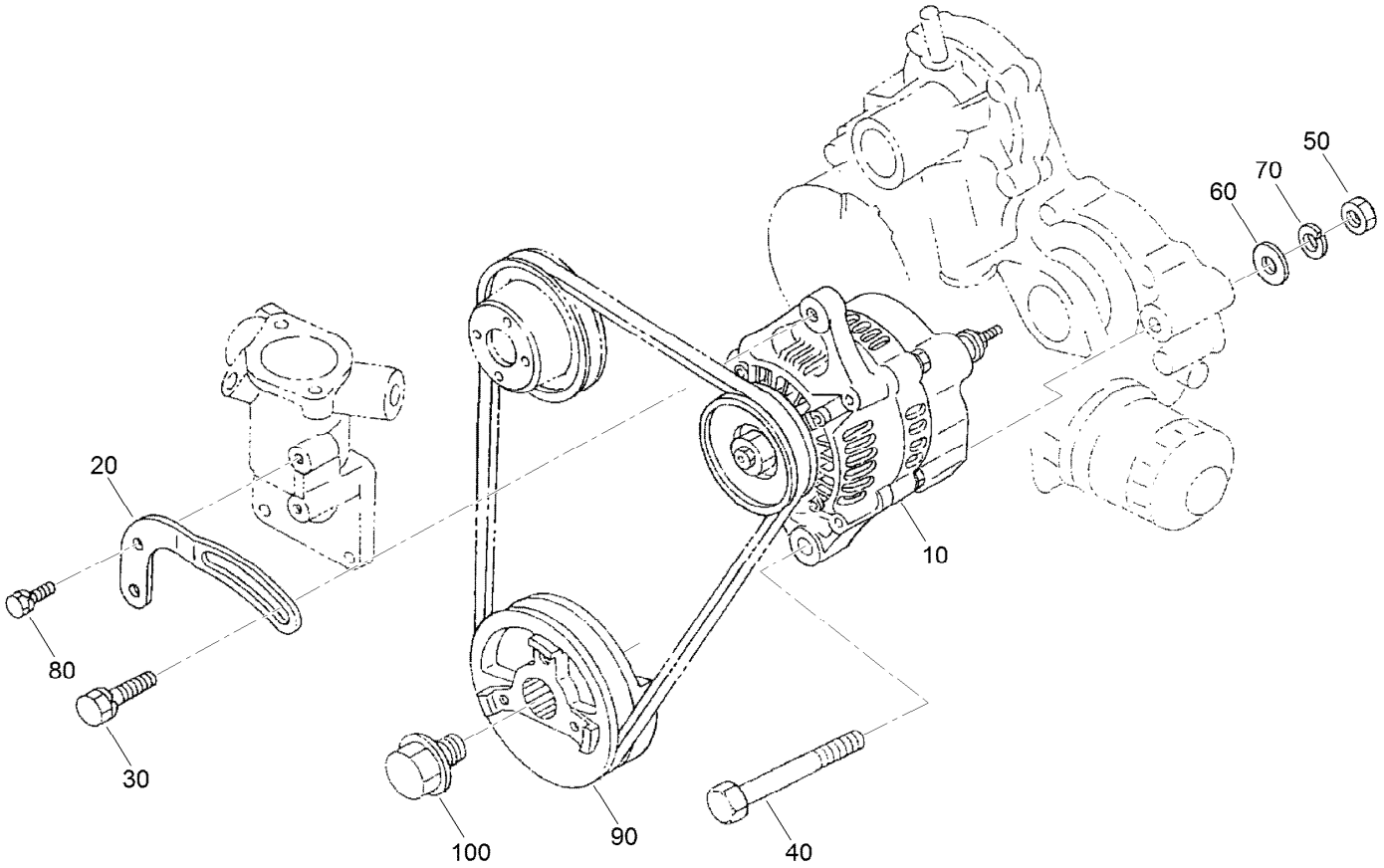

Alternator and Pulley Assembly

Ref.	*Part Number*	*Qty.*	*Description*
10	98-9474	1	Alternator ASM
20	112-7047	1	Stay-Dynamo
30	108-7088	1	Bolt
40	98-9360	1	Bolt
50	98-7737	1	Nut
60	98-9366	1	Washer-Plain
70	98-7738	1	Washer-Spring
80	98-7692	1	Bolt
90	105-3745	1	Pulley-Drive, Fan
100	98-9585	1	Bolt

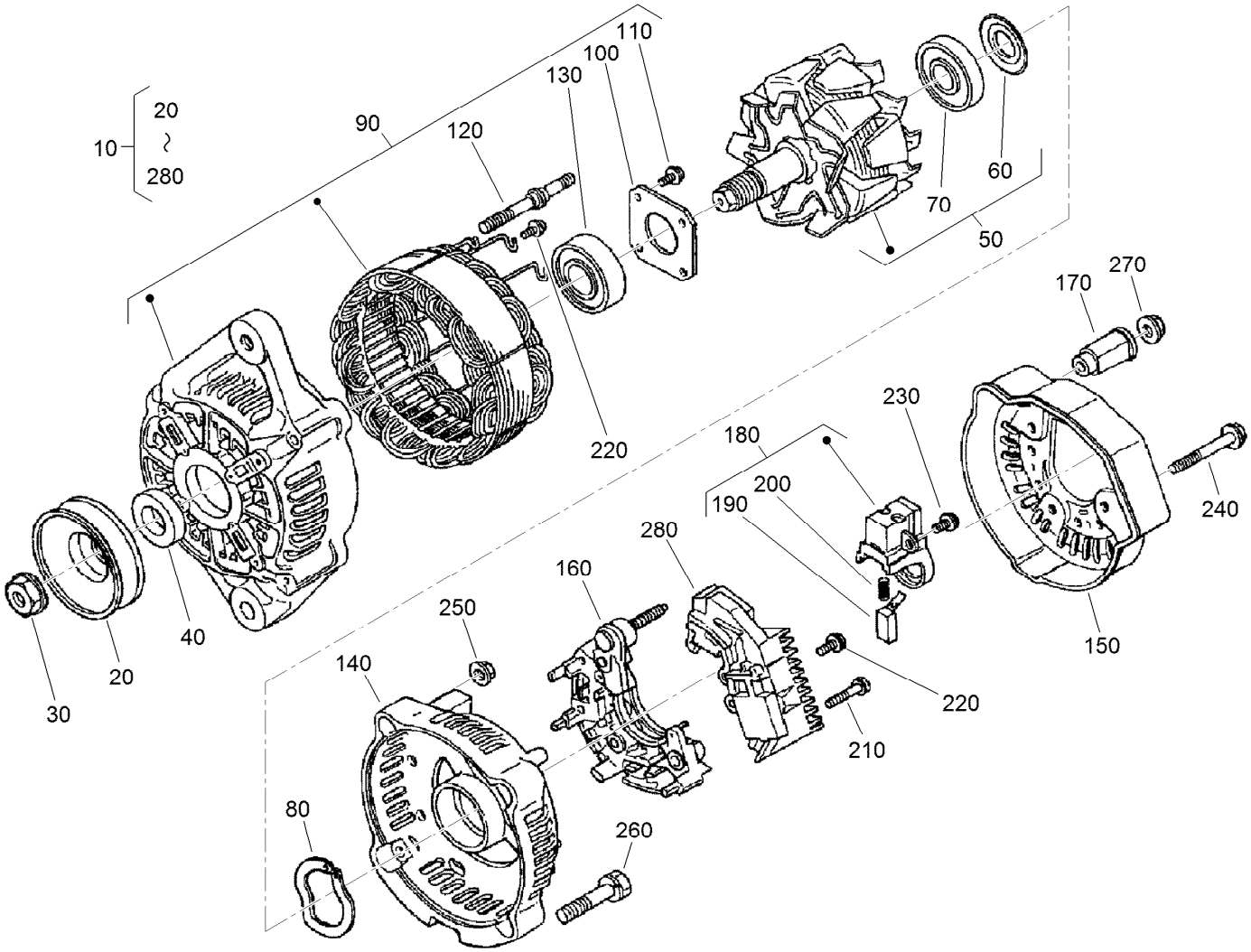

Alternator Components Assembly

Ref.	Part Number	Qty.	Description
10	98-9474	1	Alternator ASM
20	98-9453	1	Pulley-Dynamo
30	98-7708	1	Nut
40	98-7709	1	Collar
50	107-0136	1	Rotor ASM
60	98-7711	1	Cover-Bearing
70	107-0138	1	Bearing-Ball
80	98-7713	1	Washer-Thrust
90	107-0139	1	Drive End Frame ASM
100	98-7715	1	Plate-Retainer
110	98-7716	4	Screw-Head, Round
120	98-7717	2	Bolt-Through
130	133-2811	1	Bearing
140	107-9087	1	Frame-End

Ref.	Part Number	Qty.	Description
150	107-0140	1	Cover-End
160	98-7721	1	Rectifier ASM
170	98-7722	1	Bushing-Insulation
180	107-0141	1	Brush Holder ASM
190	98-7724	2	Brush
200	98-7725	2	Spring-Brush
210	98-7726	2	Screw-Head, Round
220	98-7727	6	Screw-Head, Round
230	98-7728	1	Screw-Head, Round
240	98-7729	3	Bolt
250	98-7730	2	Nut
260	98-7731	2	Bolt
270	98-7732	1	Nut
280	110-3799	1	Regulator ASM

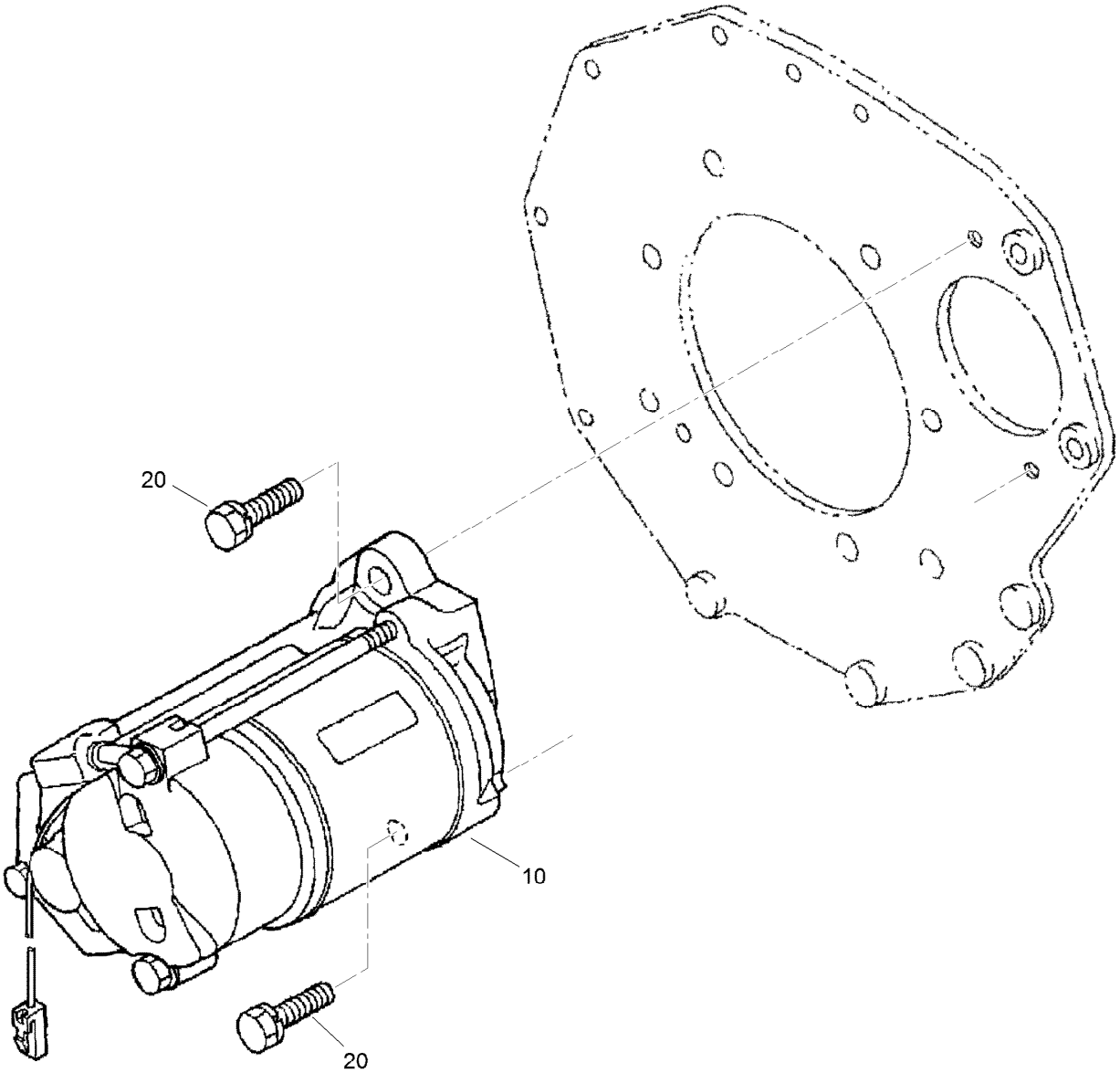

Starter Assembly

Ref.	Part Number	Qty.	Description
10	98-9705	1	Starter ASM
20	98-7697	2	Bolt

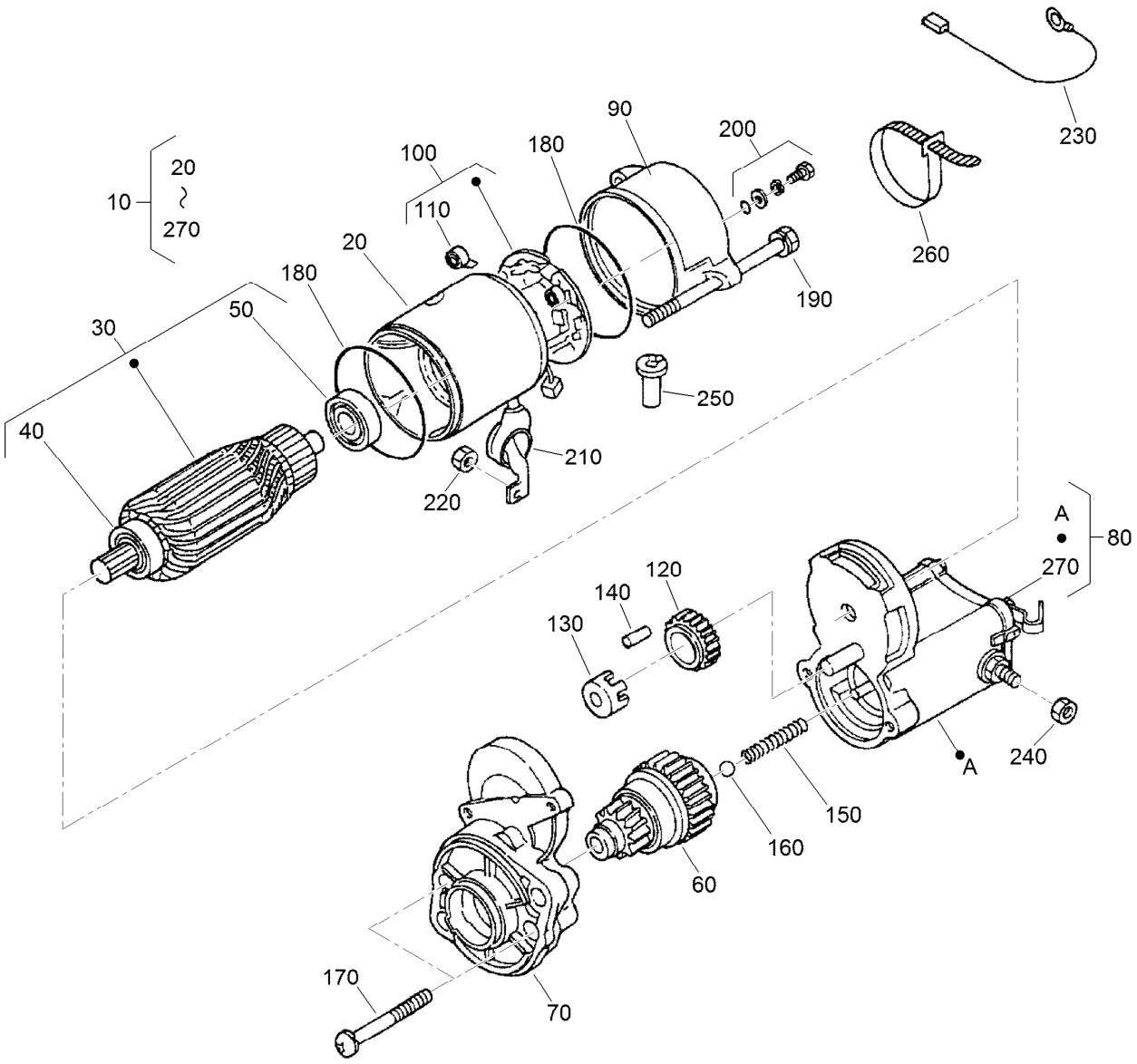

Starter Component Part Assembly No. 111-7496

Ref.	Part Number	Qty.	Description
10	98-9705	1	Starter ASM
20	104-8608	1	Yoke ASM
30	98-7742	1	Armature ASM
40	98-7744	1	Bearing
50	98-7743	1	Bearing
60	99-8373	1	Clutch-Running, Over
70	99-8374	1	Frame-End, Drive
80	105-3746	1	Magnetic Switch ASM
90	98-7748	1	Frame-End
100	98-7749	1	Brush Holder ASM
110	98-7750	4	Spring-Brush
120	98-7751	1	Gear
130	98-7752	1	Retainer
140	98-7753	5	Roller

Ref.	Part Number	Qty.	Description
150	98-7754	1	Spring
160	98-7755	1	Ball
170	98-7756	2	Bolt
180	98-7757	2	O-Ring
190	100-9240	2	Bolt
200	98-7758	2	Bolt ASM
210	99-8375	1	Cover
220	99-8371	1	Nut-Hex
230	98-9711	1	Cord-Solenoid, Stop
240	99-8376	1	Nut-Hex
250	98-7759	1	Pipe-Drain
260	98-9712	1	Band-Cover
270	105-2886	1	Cover ASM

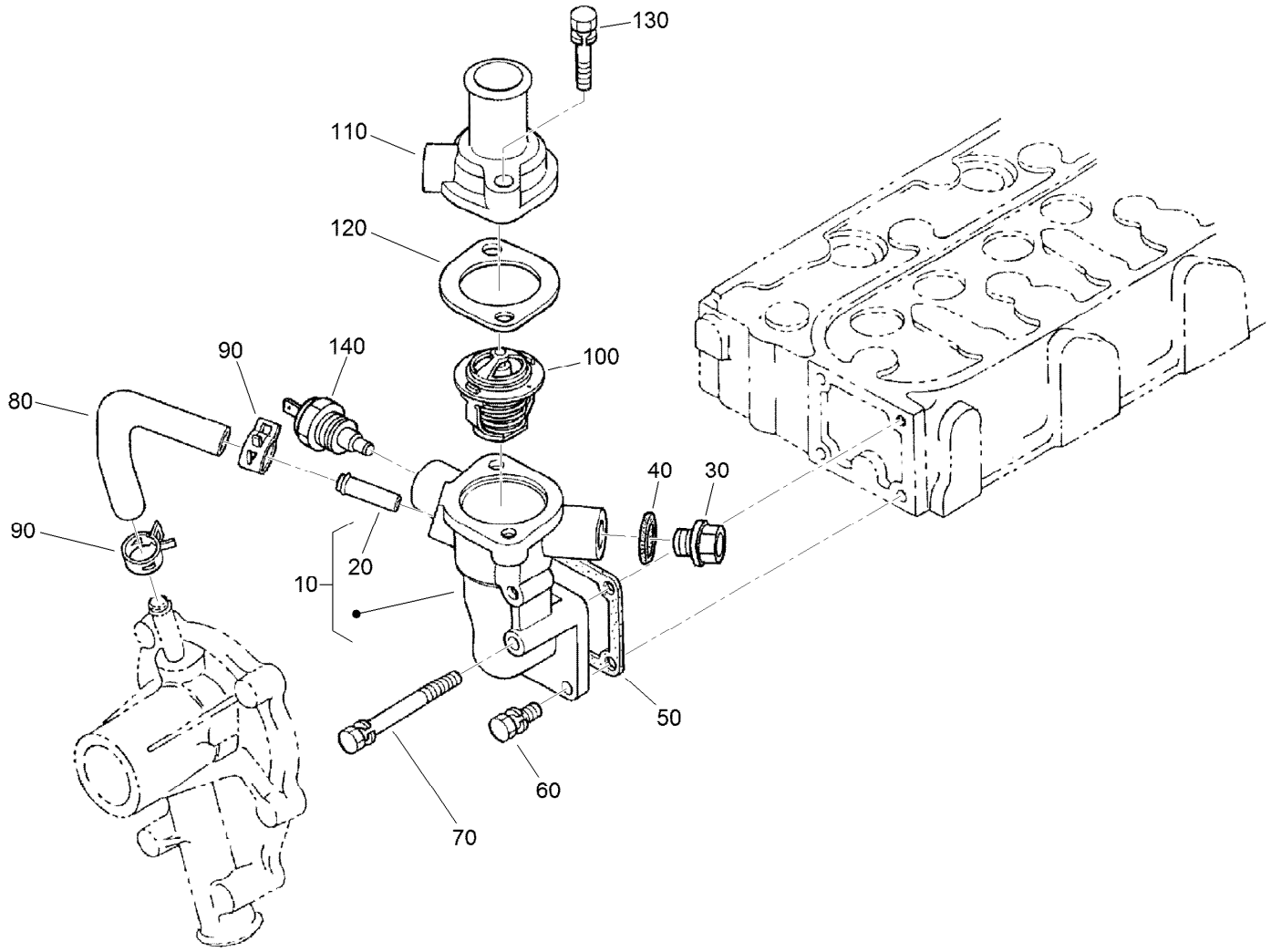

Thermostat Assembly

Ref.	Part Number	Qty.	Description
10	98-9713	1	Water Flange ASM
20	98-9580	1	Pipe-Return, Water
30	105-3747	1	Plug
40	99-3583	1	Gasket
50	98-9638	1	Gasket-Flange, Water
60	98-7692	3	Bolt
70	98-9356	1	Bolt
80	98-9578	1	Pipe-Return, Water
90	98-9579	2	Band-Pipe
100	98-7778	1	Thermostat ASM
110	98-9471	1	Cover-Thermostat
120	105-3748	1	Gasket-Thermostat
130	98-7777	2	Bolt
140	112-0183	1	Switch-Thermometer

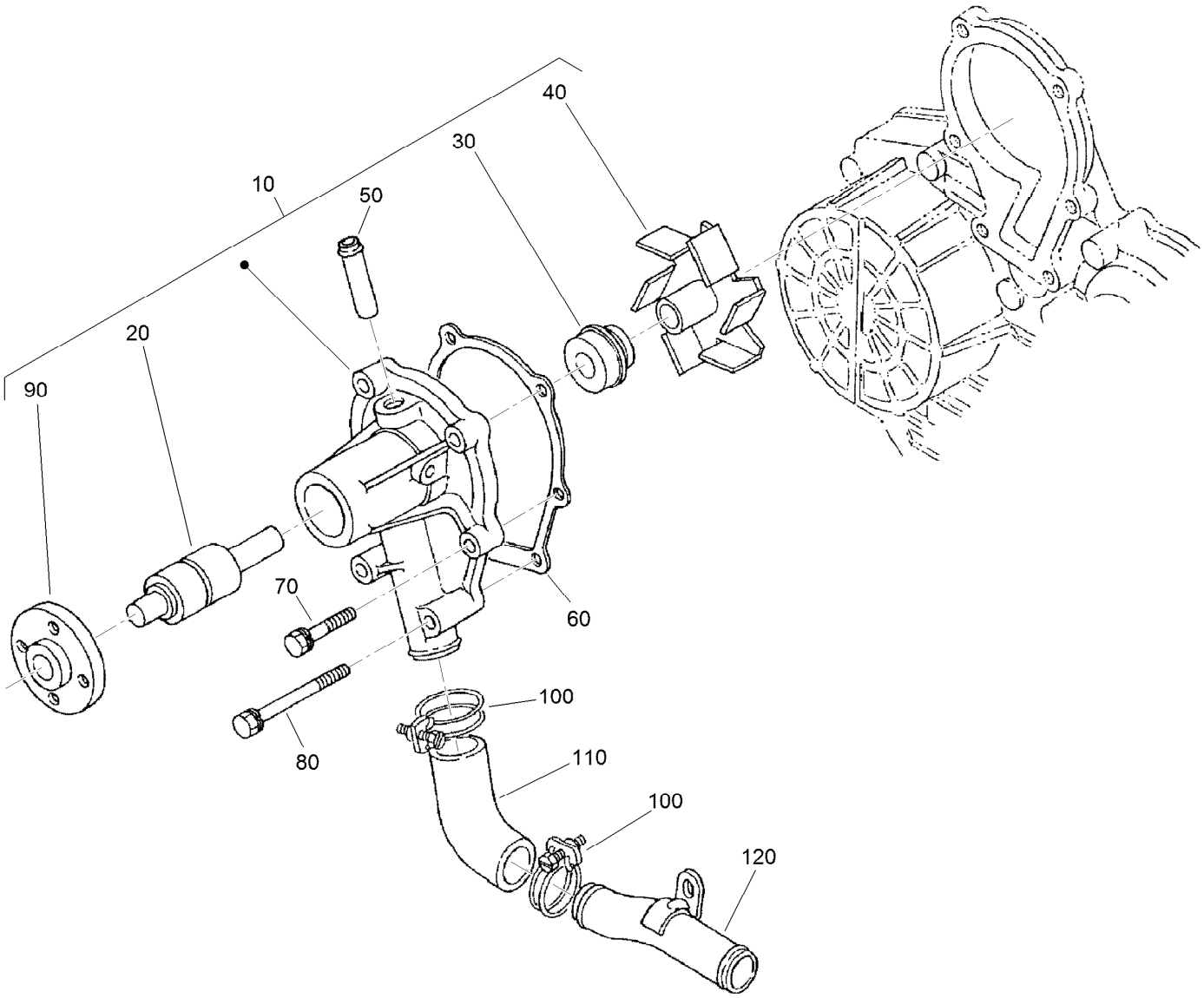

Water Pump Assembly

Ref.	Part Number	Qty.	Description
10	107-9089	1	Water Pump ASM
20	99-3517	1	Bearing-Pump, Water
30	105-3750	1	Mechanical Seal ASM
40	112-7017	1	Impeller-Pump, Water
50	100-1932	1	Pipe-Return, Water
60	99-3454	1	Gasket-Pump, Water
70	98-9353	4	Bolt
80	107-9090	2	Bolt
90	99-3516	1	Flange-Pump, Water
100	98-9717	2	Clamp
110	107-9091	1	Pipe-Water
120	98-9716	1	Pipe-Water

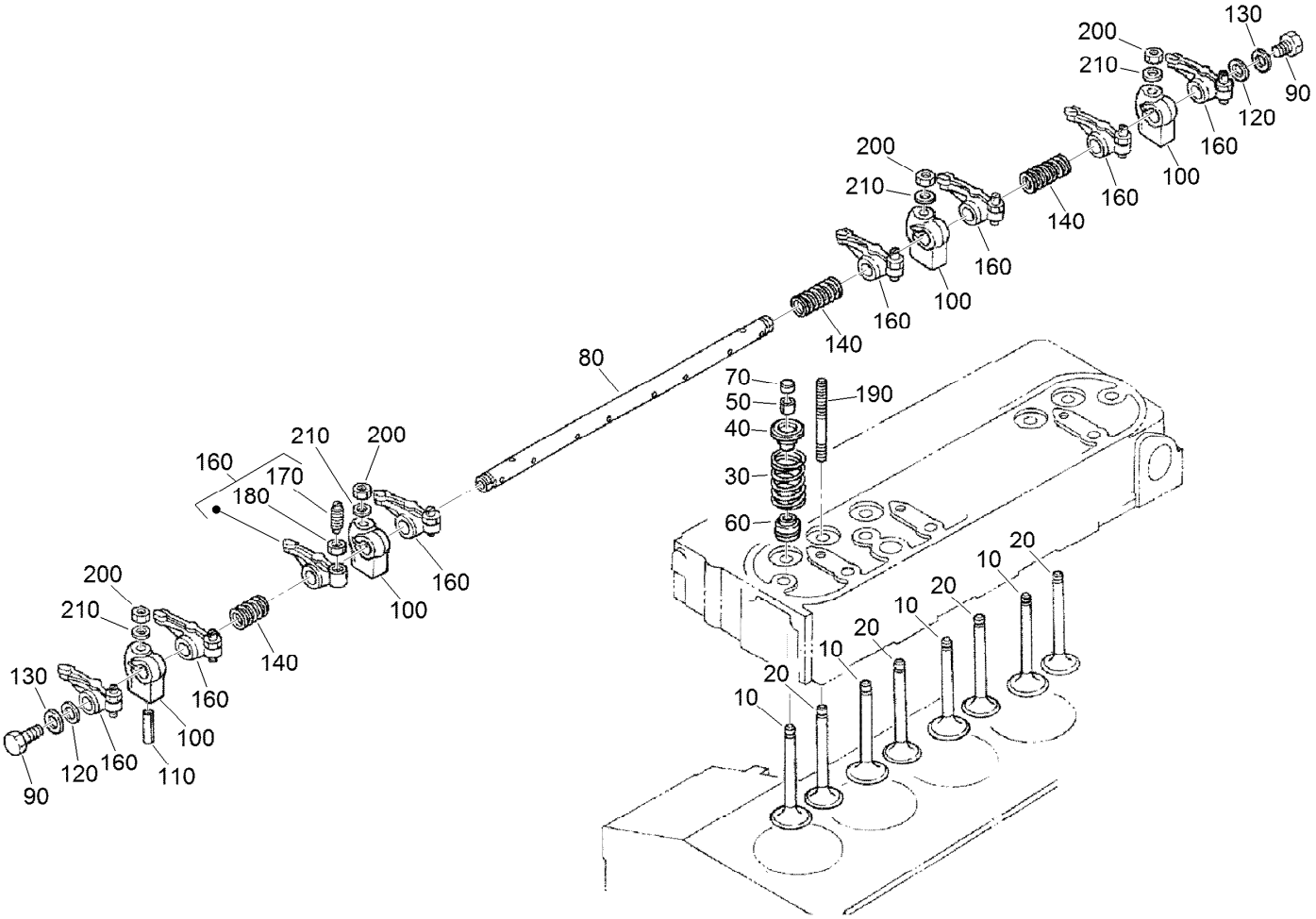

Valve and Rocker Arm Assembly

Ref.	Part Number	Qty.	Description
10	112-7018	4	Valve-Inlet
20	112-7021	4	Valve-Exhaust
30	98-9648	8	Spring-Valve
40	107-9092	8	Retainer-Spring
50	98-9390	8	Collet-Spring, Valve
60	99-8385	8	Seal-Stem, Valve
70	98-9497	8	Cap-Valve
80	105-3790	1	R-Arm Shaft ASM
90	100-1762	2	Bolt
100	98-9505	4	Bracket-Arm, Rocker

Ref.	Part Number	Qty.	Description
110	105-3758	1	Pin-Spring
120	98-9507	2	Washer-Shaft, Rocker Arm
130	110-3832	2	Washer-Plain
140	98-9504	2	Spring-Arm, Rocker
160	112-7020	8	Rocker Arm ASM
170	98-9502	8	Screw-Adjusting
180	98-9503	8	Nut
190	98-9506	4	Stud
200	98-9393	4	Nut
210	98-9385	4	Washer-Flat

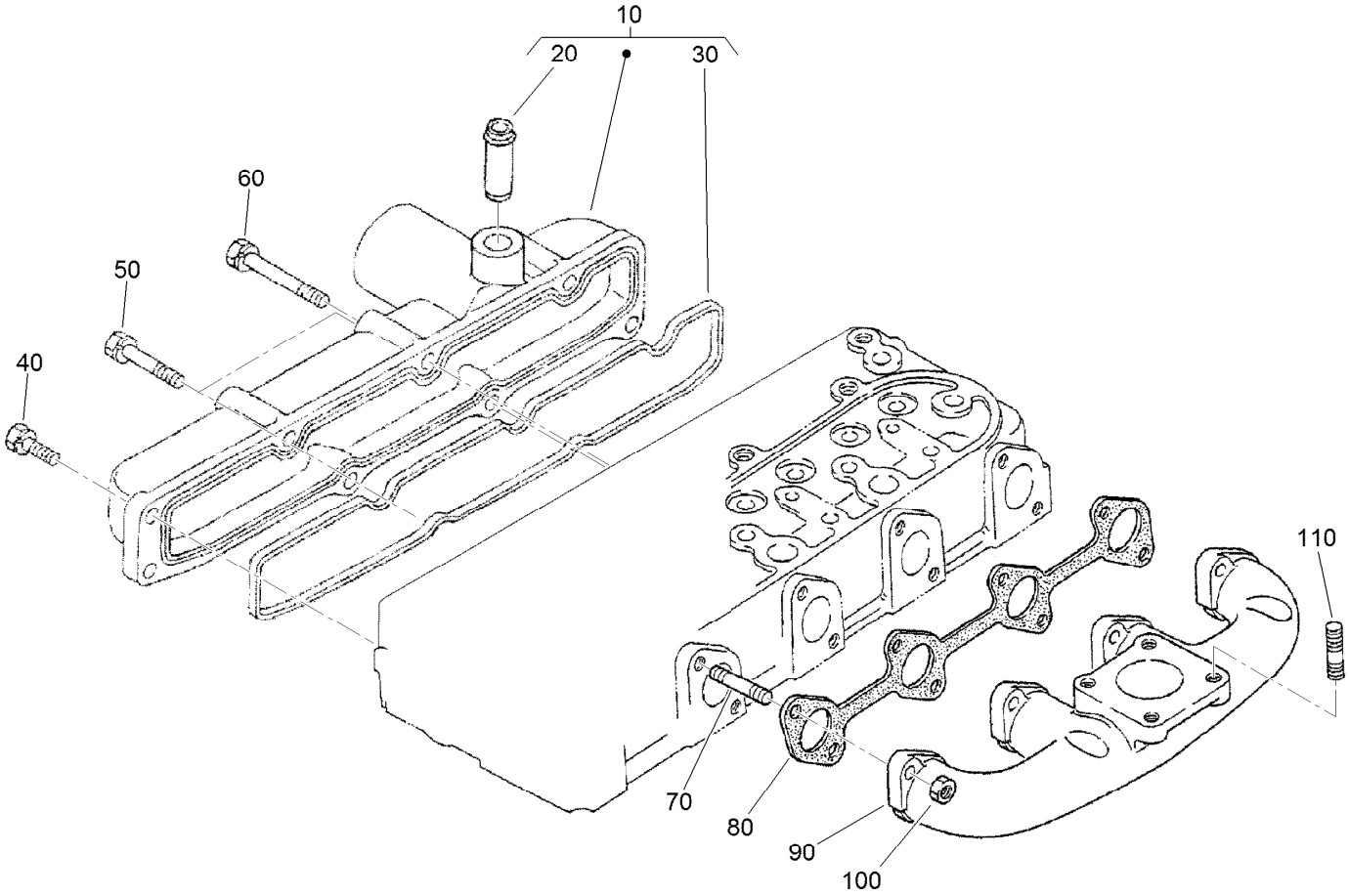

Intake and Exhaust Manifold Assembly

Ref.	*Part Number*	*Qty.*	*Description*
10	108-2874	1	Intake Manifold ASM
20	98-9492	1	Joint-Pipe, Breather
30	105-3760	1	Gasket-Manifold, Intake
40	98-7605	3	Bolt
50	98-9353	2	Bolt
60	105-3797	3	Bolt
70	98-9588	8	Stud
80	105-3765	1	Gasket-Manifold, Exhaust
90	112-0187	1	Manifold-Exhaust
100	98-9665	8	Nut
110	98-7769	4	Stud

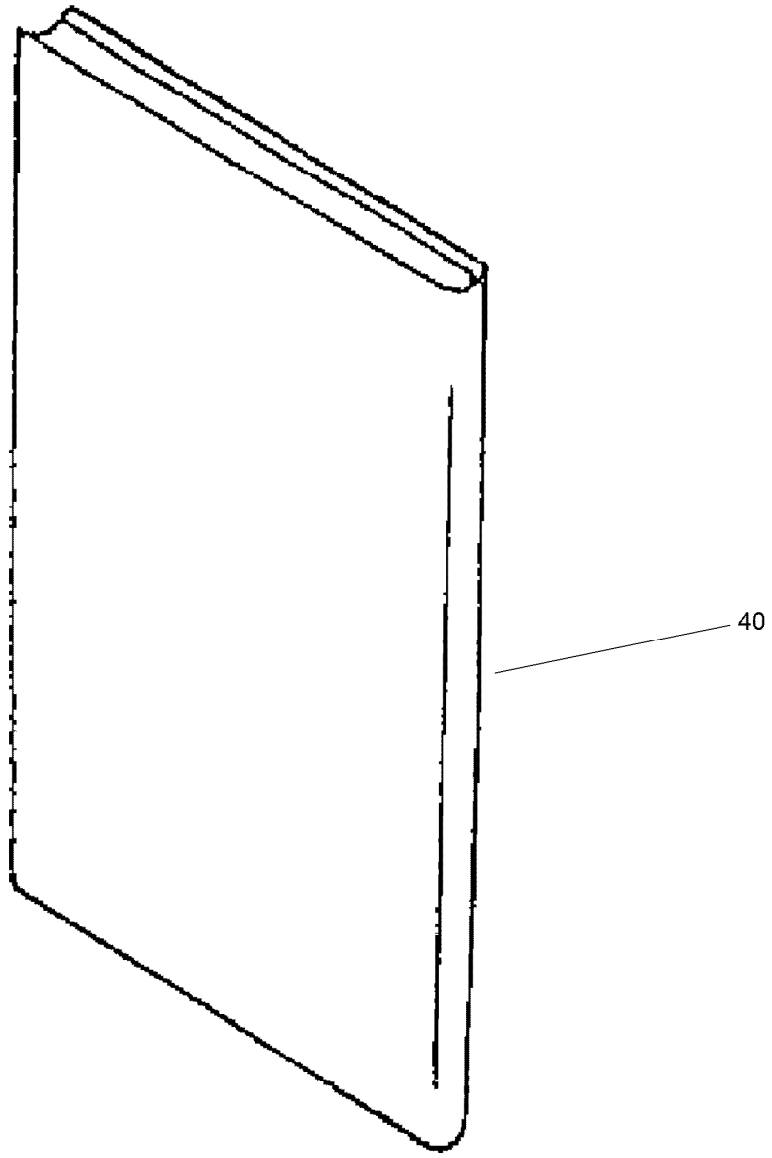

Muffler Gasket and Operator Manual Assembly

Ref.	*Part Number*	*Qty.*	*Description*
40	115-4104	1	Operator Manual

Attachments and Accessories

For 03675 Reelmaster 5410 Traction Unit

Product Name	Model/Part
CrossTrax All-Wheel Drive Kit	03655
Air Ride Seat Suspension Kit	03667
Turf Evaluator	04399
Wheel Weight Kit	104-1478
Premium All Season Hydraulic Fluid (55 Gallon Drum)	108-1177
Premium All Season Hydraulic Fluid (5 Gallon Pail)	108-1178
Premium All Purpose Grease (Tube)	108-1190
Gauge Bar Assembly	108-6715
ROPS Extension Kit	110-8030
Weight Plate	110-8985-03
Rear Lift Cylinder Limit Kit	110-9604
5in Air Cleaner Safety Element	114-4057
Premium Synthetic Bio-Degradable Hydraulic Fluid (5 Gallon Pail)	119-2157
Premium Synthetic Bio-Degradable Hydraulic Fluid (55 Gallon Drum)	119-2158
Cutting Unit Hydraulic Hose Kit	119-6955
Large Seat Cover	120-5179
Premium Engine Oil 10w30 (55 Gallon Drum)	121-6392
Premium Engine Oil 10w30 (5 Gallon Pail)	121-6393
Smooth Rear Tire	127-2796
Canopy Completion Kit	130-5895
Smooth Front Tire	133-2940
Brush and Handle Kit	29-9100
400-Hour Filter Maintenance Kit	30054
Universal Sunshade	30349
Red Universal Sunshade	30552
Spark Arrestor	98-9099

TORO®

Count on it.