1978

FORM NO. 3311-207

TORO®

MODEL 18015-8000001 & UP
MODEL 18060-8000001 & UP

PARTS CATALOG

21" H.P. & S.P. MULCHER DELUXE

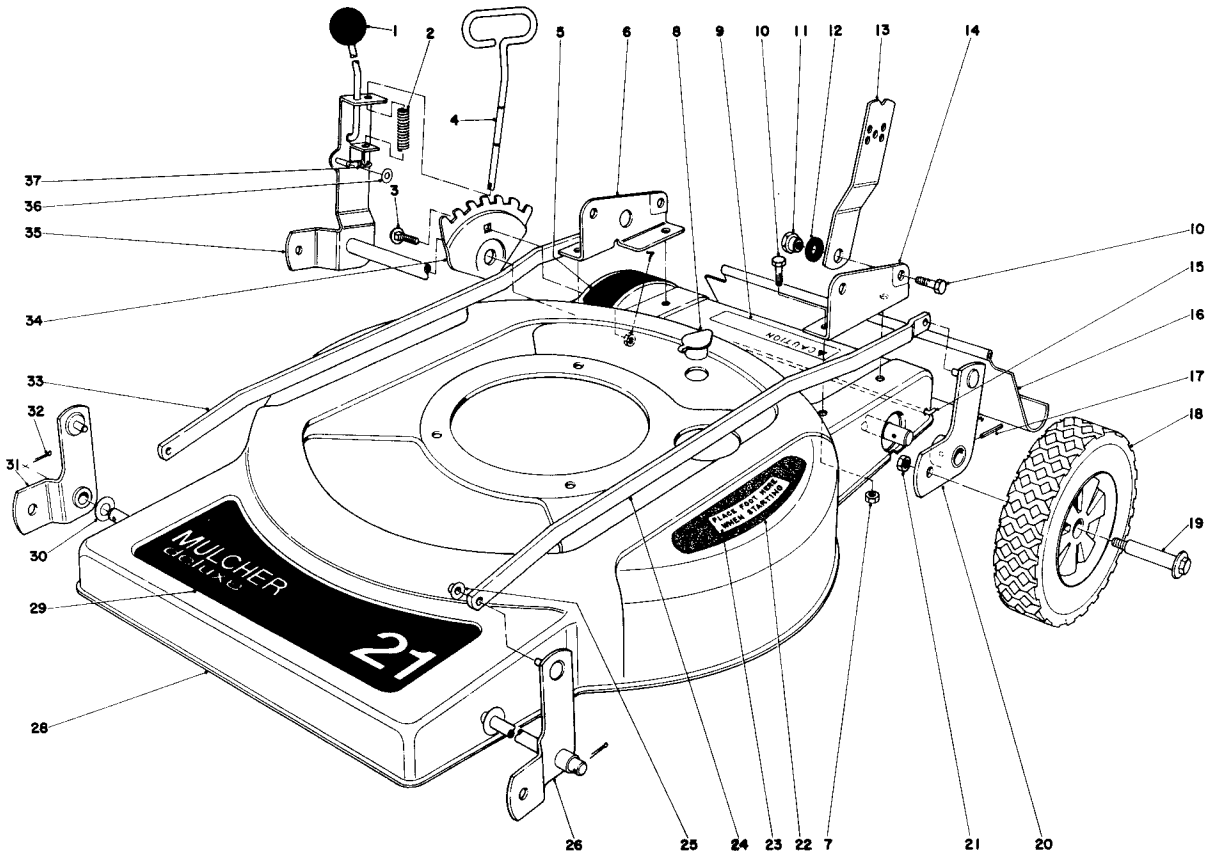

HOUSING ASSEMBLY MODEL 18015

Ref. No.	Part No.	Description	No. Used
1	233-21	Knob	1
2	36-0280	Spring Compression	1
3	37-7190	Carriage Bolt - Special	1
4	36-3930	Rod Stop	1
5	36-0030	Decal - Height of Cut	1
6	36-0260	Bracket - Handle R.H.	1
7	32152-1	Nut	5
8	6-4500	Washout Port	1
9	36-6590	Caution Decal	1
10	322-3	Capscrew	6
11	27-6520	Pivot Nut	2
12	3-3287	Spacer Rubber	2
13	27-7070	Handle Latch	2
14	36-0240	Bracket Handle L.H.	1
15	33-3204	Shield Rod	1
16	33-5560	Safety Shield	1
17	37-1460	Pin - Special	1
18	27-6200	Wheel & Tire Assembly	4
19	27-6230	Wheel Bolt	4

Ref. No.	Part No.	Description	No. Used
20	36-0330	Pivot Arm Rear L.H.	1
21	32146-6	Nut	4
22	36-0410	Step Pad	1
23	36-2820	Decal - Step Pad	1
24	36-5060	Spanner Link L.H.	1
25	3290-337	Retainers - Push On	4
26	36-0490	Pivot Arm Assembly L.H.	1
28	36-0190	Housing	1
29	36-4690	Decal - Front Deck	1
30	23-1120	Washer	2
31	36-0480	Pivot Arm Assembly R.H.	1
32	3272-11	Cotter Pin	2
33	36-0370	Spanner Link R.H.	1
34	36-0010	Plate Adjustment Height of Cut	1
35	36-3940	Pivot Arm Bracket	1
36	3256-16	Washer	1
37	32120-18	Ring - Retaining	2

COPYRIGHT© ALL RIGHTS RESERVED
The Toro Company – 1978
MINNEAPOLIS, MN 55420 – U.S.A.

PRICE $1.00

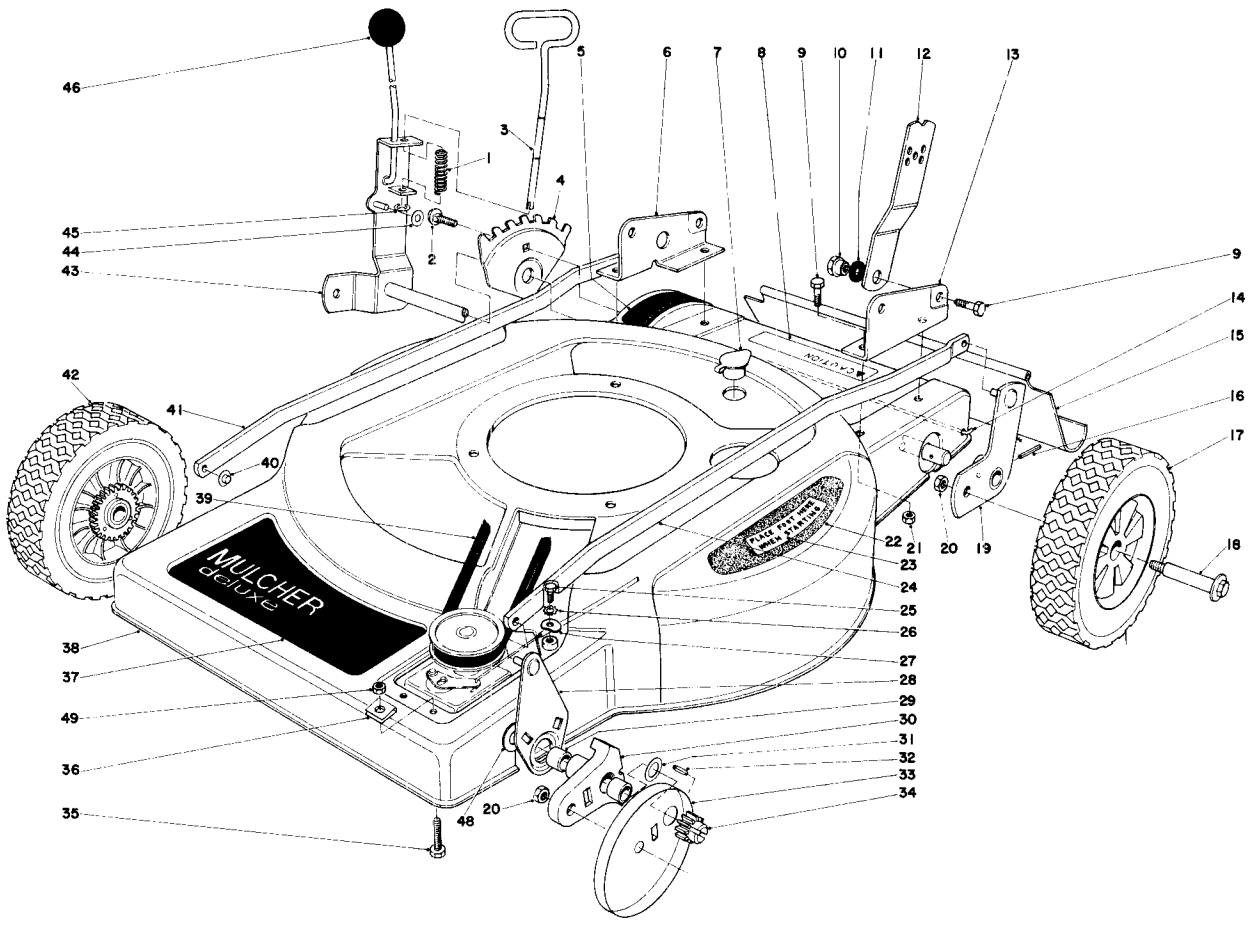

HOUSING ASSEMBLY MODEL 18060

Ref. No.	Part No.	Description	No. Used
1	36-0280	Spring Compression	1
2	37-7190	Carriage Bolt - Special	1
3	36-3930	Rod Stop	1
4	36-0010	Plate - Adjustment Height of Cut	1
5	36-0030	Decal - Height of Cut	1
6	36-0260	Bracket Handle R.H.	1
7	6-4500	Washout Port	1
8	36-6590	Decal - Caution	1
9	322-3	Capscrew	6
10	27-6520	Pivot Nut	2
11	3-3287	Spacer Rubber	2
12	27-7070	Handle Latch	2
13	36-0240	Bracket Handle L.H.	1
14	33-3204	Shield Rod	1
15	33-5560	Safety Shield	1
16	37-1460	Pin - Special	1
17	27-6200	Wheel & Tire Assembly	2
18	27-6230	Wheel Bolt	4
19	36-0330	Pivot Arm Rear L.H.	1
20	32146-6	Nut	4
21	32152-1	Nut	5
22	36-0410	Step Pad	1
23	36-2820	Decal - Step Pad	1
24	36-5060	Spanner Link L.H.	1
25	321-3	Capscrew	1

Ref. No.	Part No.	Description	No. Used
26	3255-7	Lockwasher	1
27	2412-31	Clip (Model 8000001 thru 8007965)	1
27	3-7501	Washer (Model 8007966 & Up)	1
28	36-2620	Pivot Arm Link	1
29	256-206	Bushing	4
30	36-5620	Pivot Arm (Incl. Ref. #29)	2
31	18-9810	Washer	2
32	3284-3	Pin	2
33	18-9820	Cover Wheel	2
34	18-9690	Pinion	2
35	3-7281	Screw	1
36	37-7370	Speed Nut	2
37	36-0120	Decal - Front Deck	1
38	36-0090	Housing	1
39	5-4505	V-Belt	1
40	3290-337	Retainer - Push On	4
41	36-0370	Spanner Link R.H.	1
42	36-7790	Wheel & Tire Assembly	2
43	36-3940	Pivot Arm Bracket	1
44	3256-16	Washer	1
45	32120-18	Retaining Ring	2
46	233-21	Knob	1
48	11-4930	Washer	1
49	32146-17	Nut	1

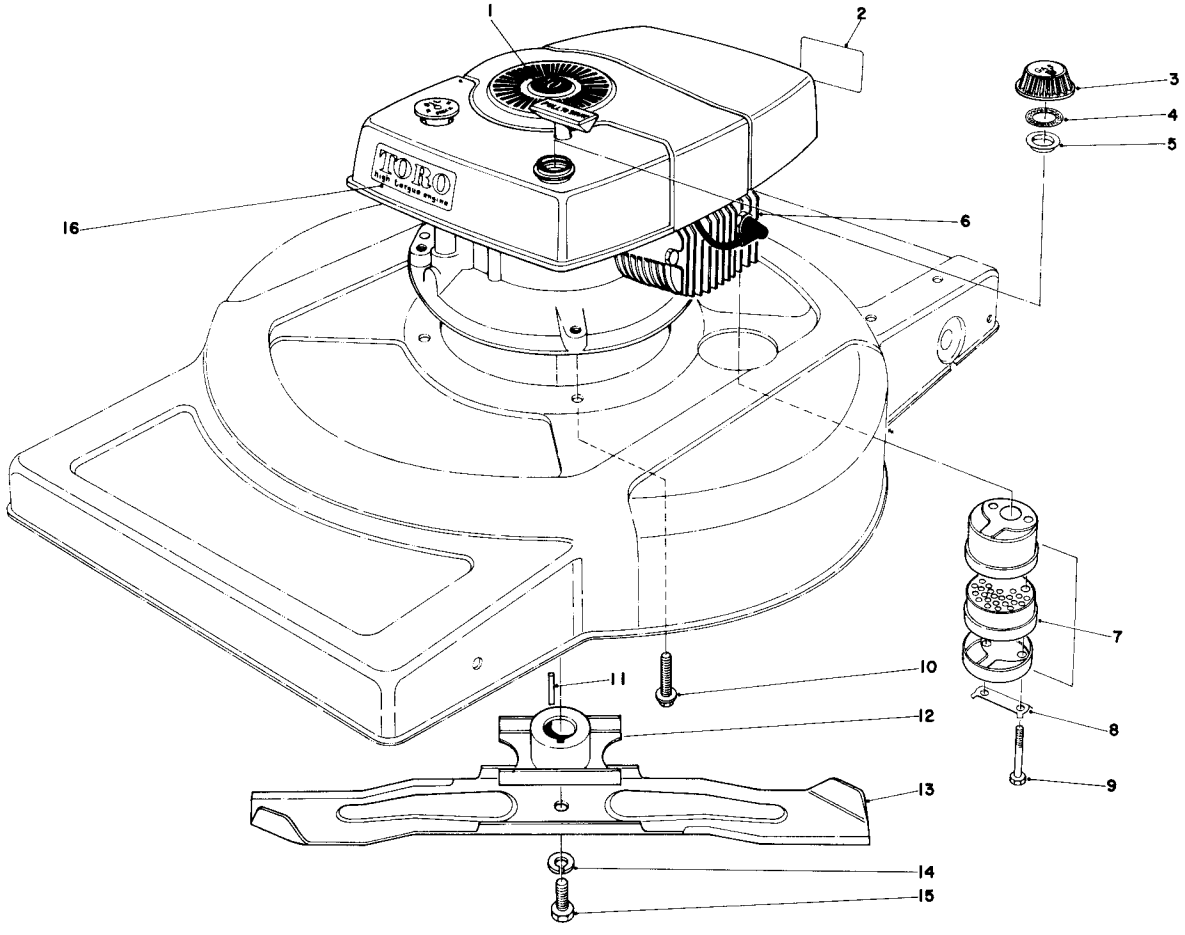

ENGINE ASSEMBLY MODEL 18015

Ref. No.	Part No.	Description	No. Used
1	21-4870	Plug Button	1
2	37-1580	Decal - Maintenance	1
3	27-7870	Gas Cap (Incl. Ref.#4 & 5)	1
4	2210-144	Gasket - Gas Cap	1
5	2210-143	Baffle Gas Cap	1
6	221-578	Engine	1
7	5-4769	Muffler Assembly (Incl. Ref. #8 & 9)	1
8	3-5094	Locking Clip	1
9	321-20	Capscrew	2

Ref. No.	Part No.	Description	No. Used
10	11-0590	Screw	3
11	7-0036	Key Square	1
12	23-0110	Blade Retainer	1
13	36-8220	Blade	1
14	3253-22	Lockwasher	1
15	23-0080	Blade Bolt	1
16	23-1260	Decal - High Torque	1
*	36-3200	Spark Arrestor Muffler (Optional)	1

*Not Illustrated

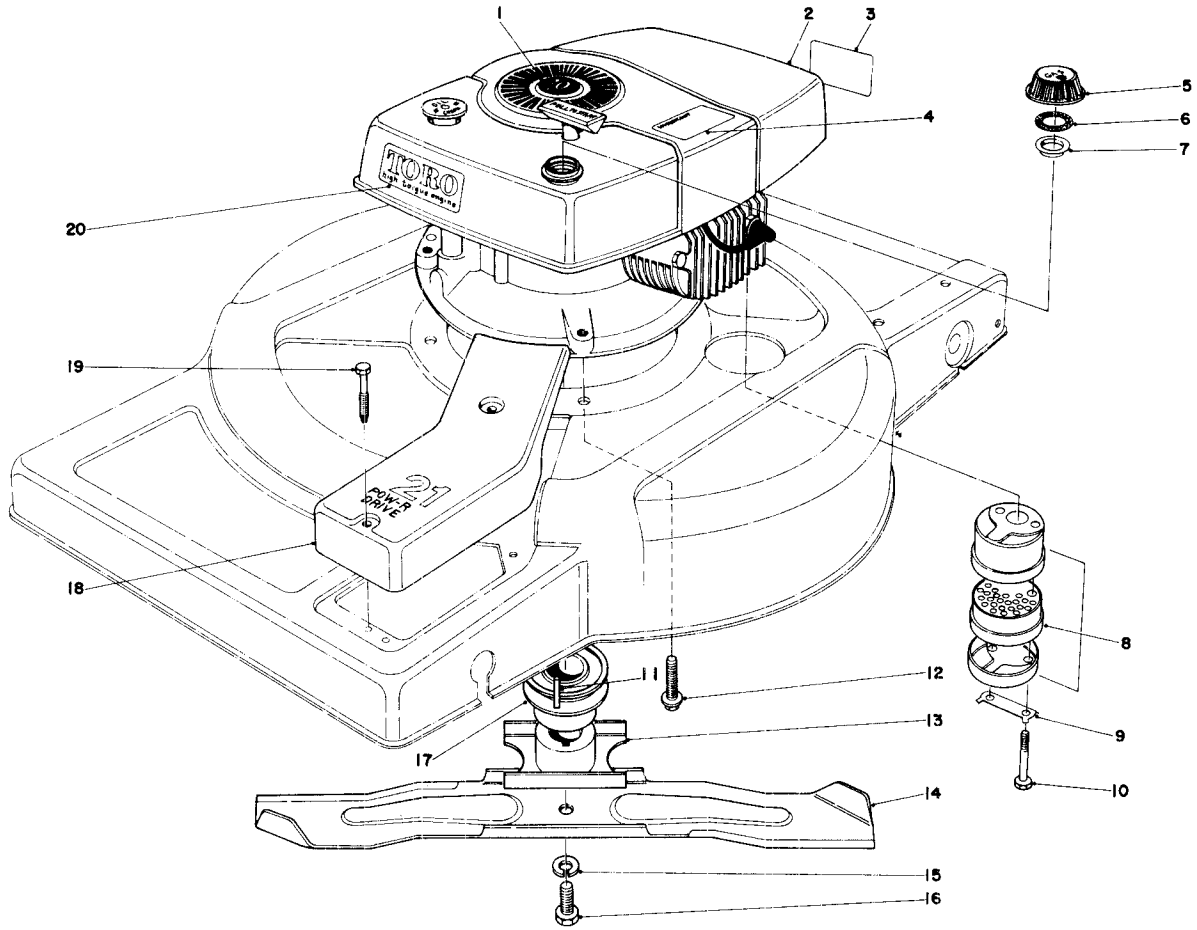

ENGINE ASSEMBLY MODEL 18060

Ref. No.	Part No.	Description	No. Used
1	21-4870	Plug Button	1
2	221-578	Engine	1
3	37-1580	Decal - Maintenance	1
4	25-1050	Decal - Lockout	1
5	27-7870	Gas Cap Assembly (Incl. Ref. #6 & 7)	1
6	2210-144	Gasket Gas Cap	1
7	2210-143	Baffle Gas Cap	1
8	5-4769	Muffler Assy. (Incl. Ref.#9 & 10)	1
9	3-5094	Locking Clip	1
10	321-20	Screw Hex Hd.	2
11	27-8590	Key Square	1

Ref. No.	Part No.	Description	No. Used
12	11-0590	Screw	3
13	23-0110	Blade Retainer	1
14	36-8220	Blade	1
15	3253-22	Lockwasher	1
16	23-0080	Blade Bolt	1
17	23-0130	Pulley - Driver	1
18	36-0390	Belt Cover	1
19	37-7260	Capscrew - Special	2
20	23-1260	Decal - High Torque	1
*	36-3200	Spark Arrestor Muffler (Optional)	1

* Not Illustrated

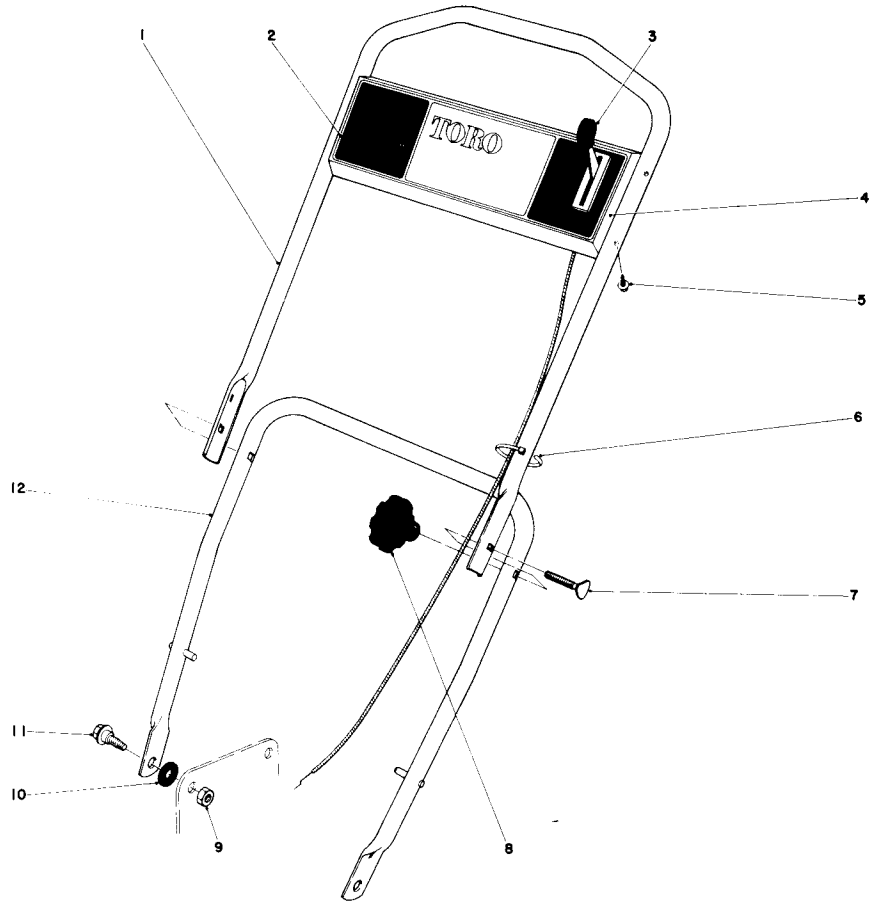

HANDLE ASSEMBLY MODEL 18015

Ref. No.	Part No.	Description	No. Used
1	36-0110	Upper Handle	1
2	36-4830	Decal - Control Plate	1
3	33-2548	Throttle Control	1
4	36-4710	Control Plate	1
5	32104-76	Screw	4
6	3290-378	Cable Tie	2

Ref. No.	Part No.	Description	No. Used
7	17-9420	Handle Screw	2
8	19-4050	Handle Knob	2
9	32152-1	Nut	2
10	3-3287	Rubber Spacer	2
11	5-2490	Handle Screw	2
12	36-0020	Lower Handle	1

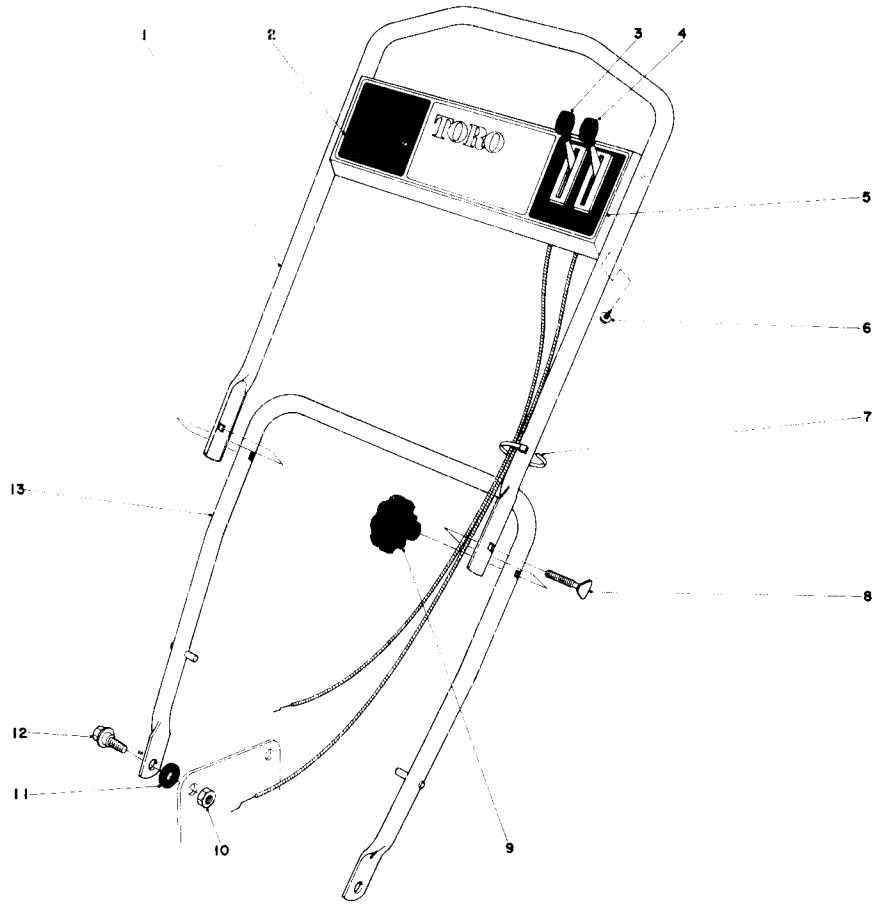

HANDLE ASSEMBLY MODEL 18060

Ref. No.	Part No.	Description	No. Used
1	36-0110	Upper Handle	1
2	36-0510	Decal - Control Plate	1
3	33-2548	Control - Throttle	1
4	33-2561	Control - Traction	1
5	36-0160	Control Plate	1
6	32104-76	Screw	4
7	3290-378	Cable Tie	2

Ref. No.	Part No.	Description	No. Used
8	17-9420	Handle Screw	2
9	19-4050	Handle Knob	2
10	32152-1	Nut	2
11	3-3287	Spacer Rubber	2
12	5-2490	Screw Handle	2
13	36-0020	Lower Handle	1

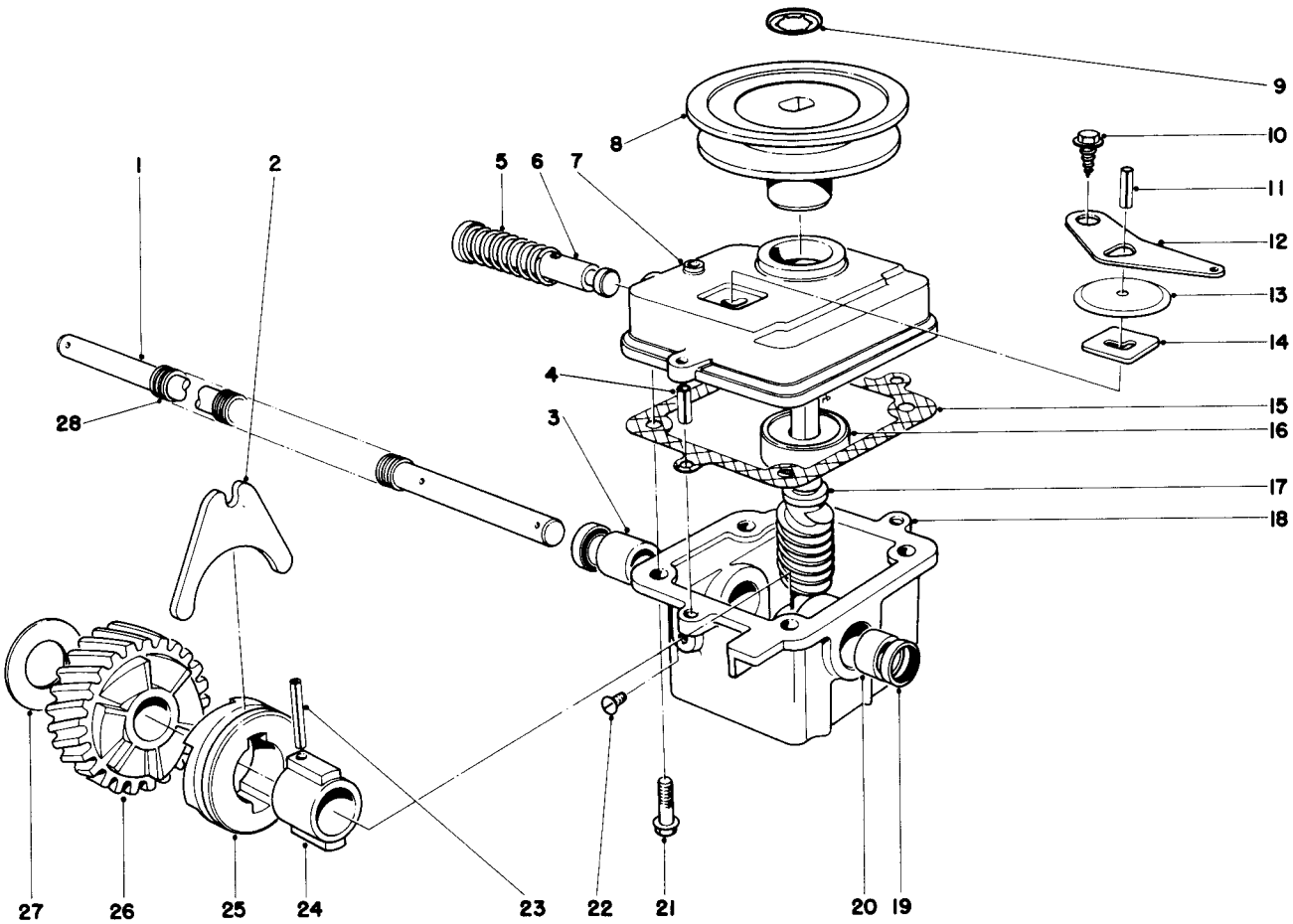

GEAR CASE ASSEMBLY MODEL 18060

Ref. No.	Part No.	Description	No. Used
1	29-4630	Drive Shaft	1
2	5-3247	Shifter Fork	1
3	256-263	Bushing	1
4	32121-1	Roll Pin	2
5	3-0731	Spring	1
6	5-3248	Shifter Rod	1
7	33-2080	Cover Gear Case	1
8	20-2780	Pulley	1
9	3290-346	Push On Retainer	1
10	32140-64	Self Tapping Screw	1
11	32121-23	Roll Pin	1
12	5-3252	Shifter Arm	1
13	3-2615	Transmission Dust Cover	1
14	3-0681	Latch Plate	1
15	36-1000	Gasket - Gear Case	1

Ref. No.	Part No.	Description	No. Used
16	251-144	Ball Bearing	1
17	6-9949	Worm Shaft & Gear (Incl. Ref. #26)	1
18	8-0479	Gear Case (Incl. Ref.#3,19,20)	1
19	253-140	Oil Seal	2
20	256-110	Bushing	1
21	11-9760	Screw	4
22	28-1550	Screw Nylon	1
23	32121-88	Coil Pin	1
24	3-0721	Sleeve	1
25	19-5660	Clutch Jaw	1
26		Helical Gear	1
27	3-0724	Thrust Washer	1
28	24-7920	Drive Shaft Cover	1
*	33-2151	Gear Case Assembly	1

ENGINE TECUMSEH MODEL TNT 100 - 10049B

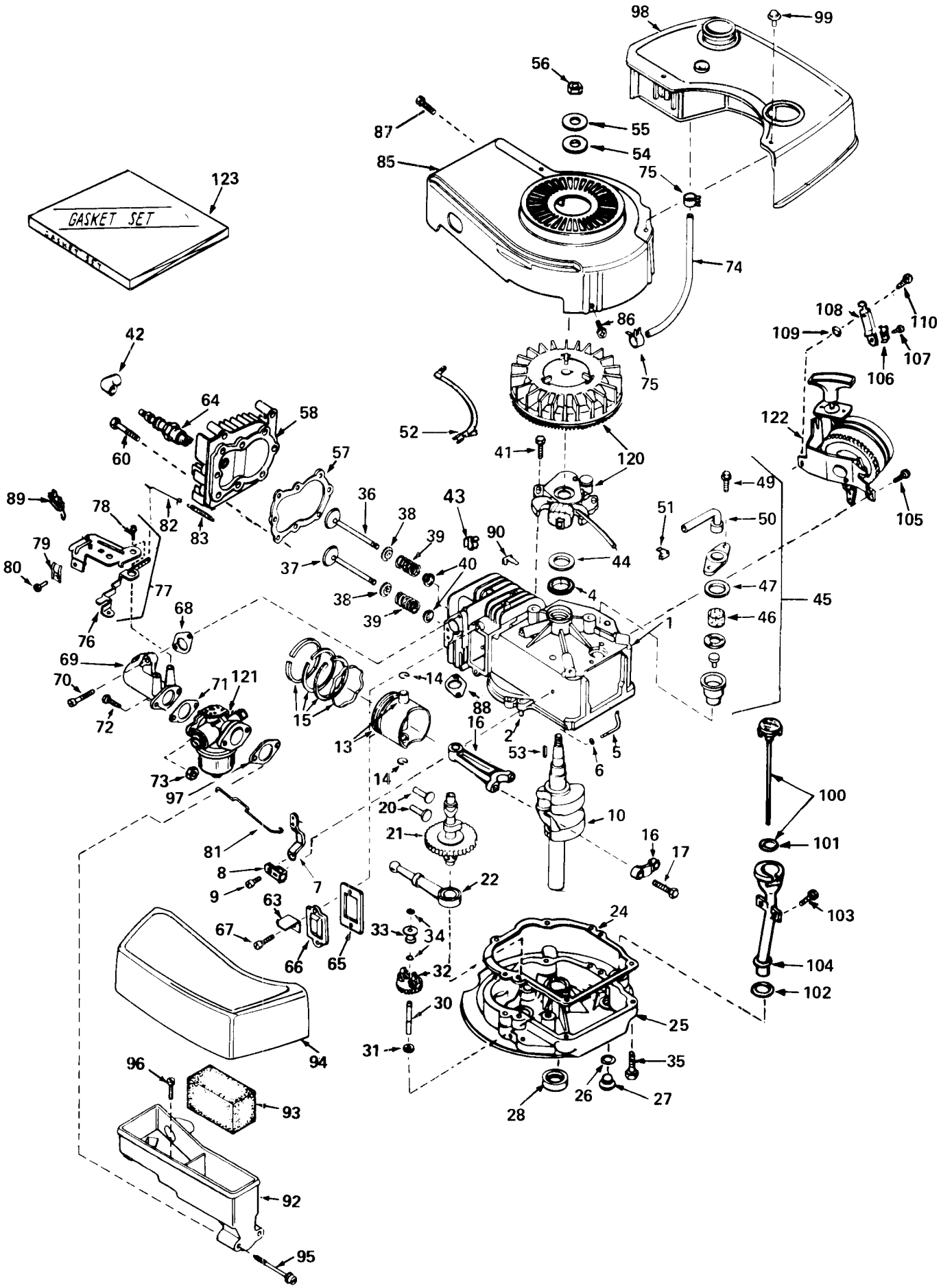

ENGINE TECUMSEH MODEL TNT 100 - 10049B

Ref. No.	Part No.	Description	No. Used
1	33883	Cylinder Assy. (Incl. Ref.#2, 4 & 105)	1
2	26727	Pin, Dowel	2
4	29183	Seal, Oil	1
5	30589	Rod, Governor (Incl. Ref.#6)	1
6	28277	Washer, Flat	1
7	32651	Lever, Governor	1
8	31335	Clamp, Governor Lever	1
9	650548	Screw, Hex slotted washer hd.	1
10	34233A	Crankshaft	1
13	32603A	Piston, Pin & Ring Assy. (Incl. Ref.#14 & 15) (Std.)	1
13	32604A	Piston, Pin & Ring Assy. (Incl. Ref.#14 & 15) (.010 oversize)	1
13	32605A	Piston, Pin & Ring Assy. (Incl. Ref.#14 & 15) (.020 oversize)	1
14	20381	Ring, Piston pin retaining	2
15	32606	Ring Set, Piston (Std.)	1
15	32607	Ring Set, Piston (.010 oversize)	1
15	32608	Ring Set, Piston (.020 oversize)	1
16	30963B	Rod Assy., Connecting (Incl. Ref.#17)	1
17	32610A	Bolt, Connecting rod	2
20	27241	Lifter, Valve	2
21	33553	Camshaft (Mech. Compression Release)	1
22	29914	Pump Assembly, Oil	1
24	*26750A	Gasket, Mounting flange	1
25	30594B	Flange Assy., Mounting (Incl. Ref.#26 thru 30)	1
26	*28833	Gasket, Oil drain plug	1
27	27244	Plug, Oil drain	1
28	26208	Seal, Oil	1
30	30574	Shaft, Mechanical governor	1
31	30590A	Washer, Flat	1
32	30591	Gear Assy., Governor (Incl. Ref. #31)	1
33	30588A	Spool, Governor	1
34	29193	Ring, Retaining	2
35	650488	Screw, Hex hd. Sems	6
36	29314A	Valve, Intake (Std.) (Incl. Ref.#38, 39 & 40)	1
36	29315B	Valve, Intake (1/32" oversize) (Incl. Ref.#38, 39 & 40)	1
37	29313B	Valve, Exhaust (Std.) (Incl. Ref.#38, 39 & 40)	1
37	29315B	Valve, Exhaust (1/32" oversize) (Incl. Ref. #38, 39 & 40)	1
38	31671	Cap, Upper valve spring	2
39	31672	Spring, Valve	2
40	31673	Cap, Lower valve spring	2
41	650489	Screw, Hex hd. Sems	2
42	610118	Cover, Spark plug	1
43	27275	Clip, Lead wire	1
44	33876	Gasket, Stator	1
45	34214	Breather Assy. (Incl. Ref.#46, 47, 49, 50 & 51)	1
46	33734	Element, Breather	1
47	*33735	Gasket, Breather	1
49	650768	Screw, Hex hd. thread forming w/conical washer	2
50	33886	Tube, Breather	1
51	33887	Clip, Breather tube	1
52	34230	Wire, Ground	1
53	610961	Key, Flywheel	1
54	650791	Washer, Flat	1
55	650763	Washer, Belleville	1
56	650607	Nut, Flywheel	1
57	*33015	Gasket, Cylinder head	1
58	34342	Head, Cylinder	1
60	6021A	Screw, Hex flange hd.	8
63	30593	Clip, Magneto wire	1
64	33636	Plug, Spark (Champion J-8 or equivalent) Except for Canada	1
64	34251	Resistor Spark Plug (Canadian Regulations require RJ-17LM resistor spark plug)	1
65	*27234	Gasket, Valve spring cover	1
66	32755	Cover, Valve spring box	1
67	650128	Screw, Fil. slotted hd. Sems	2
68	*32649	Gasket, Intake pipe	1
69	33004	Pipe, Intake	1
70	650451	Screw, Hex hd. Sems	2
71	*31688	Gasket, Carburetor	1
72	6201	Screw, Hex hd. cap	2
73	29752	Nut & Lockwasher Assembly	2
74	30705	Line, Fuel	1
75	26460	Clamp, Fuel line	2
76	34310	Lever, Control	1
77	33889A	Control Assembly, Speed (Incl. Ref.#76, 78 & 89)	1
78	650804	Screw, Hex washer hd. Shoulder self-tap	1
79	27793	Clip, Conduit	1
80	28942	Screw, Hex hd. Sems	1
81	34336	Link, Governor-to-throttle	1
82	33151	Link, Governor spring	1
83	33890	Spring, Governor	1
85	33891A	Housing, Blower	1
86	650497	Screw, Flex pan hd.	2
87	30200	Screw, Hex washer hd. self-tap Sems	2
88	*30081	Gasket, Exhaust	1
89	610973	Terminal Assembly	1
90	29443	Clip, Fuel Line	1
92	33895	Body, Air Cleaner	1
93	33896	Filter, Air Cleaner	1
94	33897	Cover, Air Cleaner	1
95	650762	Screw, Fil. hd. Sems	2
96	650784	Screw, Hex hd. w/flatwasher taptite	1
97	*33051	Gasket, Air Cleaner	1
98	33904A	Tank, Fuel	1
99	28763	Screw, Hex washer hd. shakeproof	2
100	33894A	Dipstick, Oil (Incl. Ref. #101) (Twist Lock)	1
101	33590	"O" Ring	1
102	34265	Gasket	1
103	650562	Screw, Hex washer hd. shakeproof	2
104	34380	Tube, Oil filler (Plastic)	1
105	650737	Screw, Hex washer hd. taptite	2
106	27793	Clip, Conduit	1
107	28942	Screw, Slotted hex hd. Sems	1
108	34099	Bracket	1
109	27070	Washer, Lock	1
110	650738	Screw, Hex washer spinlock hd. thread forming	1
120	610793A	Magneto (The complete magneto is not available as an assembly. The magneto number is shown for reference purposes only. Order component parts individually, as shown in parts list.)	1
121	632050	Carburetor (Incl. Ref. #71)	1
122	590519	Starter, Side mount	1
123	33906	Gasket Set (Incl. items marked *)	1

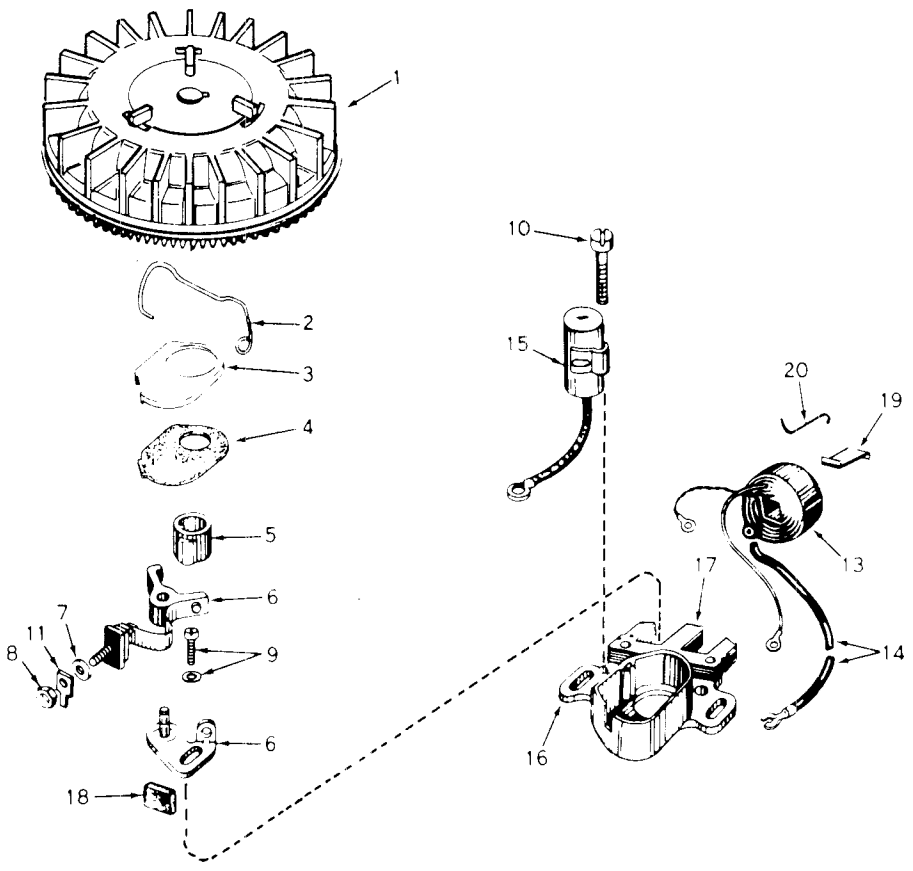

*MAGNETO NO. 610793A

Ref. No.	Part No.	Description	No. Used
1	610782A	Flywheel (Incl. Ref. #3 & 4)	1
2	30551	Spring, Breaker Box Dust Cover	1
3	610947	Cover, Breaker Box Dust	1
4	610948	Gasket, Dust Cover	1
5	30552	Cam, Breaker	1
6	30547A	Breaker Assembly	1
7	610385	Washer, Terminal	1
8	610408	Nut, Terminal	1
9	29181	Screw & Washer Assy., Breaker	1
10	610593	Screw, Condenser Fastening	1

Ref. No.	Part No.	Description	No. Used
11	33356	Tab, Ground Terminal	1
13	30560A	Coil Assembly (Incl. Ref. #14)	1
14	30554	Wire, Ignition Lead	1
15	30548A	Condenser	1
16	30545	Core & Plate Group	1
17	30561B	Stator Assembly (Incl. Ref. #2, 3, 4, 6 thru 16, 18, 19 & 20)	1
18	30549	Felt, Cam Wiper	1
19	29629	Spring, Coil Wedge	1
20	31311	Clip, Coil Locking	1
		*The complete magneto is not available as an assembly. The magneto number is shown for reference purposes only. Order component parts individually, as shown in parts list.	

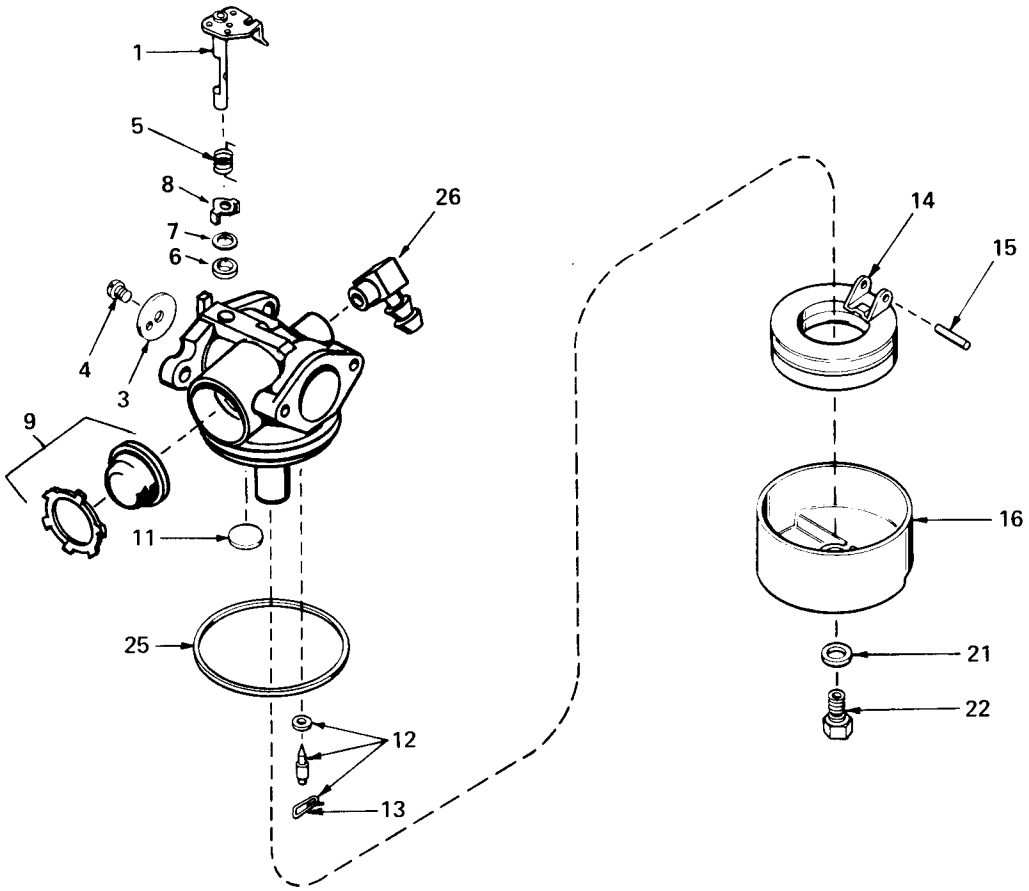

CARBURETOR NO. 632050

Ref. No.	Part No.	Description	No. Used
1	631615	Shaft & Lever Assy, Throttle	1
3	631616	Shutter, Throttle	1
4	650506	Screw, Throttle Shutter	1
5	632016	Spring, Return	1
6	631971	Seal, Dust	1
7	631184	Washer	1
8	631972	Retainer, Dust Seal	1
9	632047	Bulb & Retainer, Primer	1
11	631027	Plug, Welch	1

Ref. No.	Part No.	Description	No. Used
12	631021	Inlet Needle, Seat & Clip Assy. (Incl. Ref #13)	1
13	631022	Clip, Inlet Needle	1
14	632019	Float, Carburetor	1
15	631024	Shaft, Float	1
16	631700	Bowl, Float	1
21	631334	Gasket, Bowl-to-Body	1
22	631935	Nut, Float Bowl	1
25	631028	Gasket, Bowl-to-Body	1
26	631807	Fitting, Fuel Inlet	1

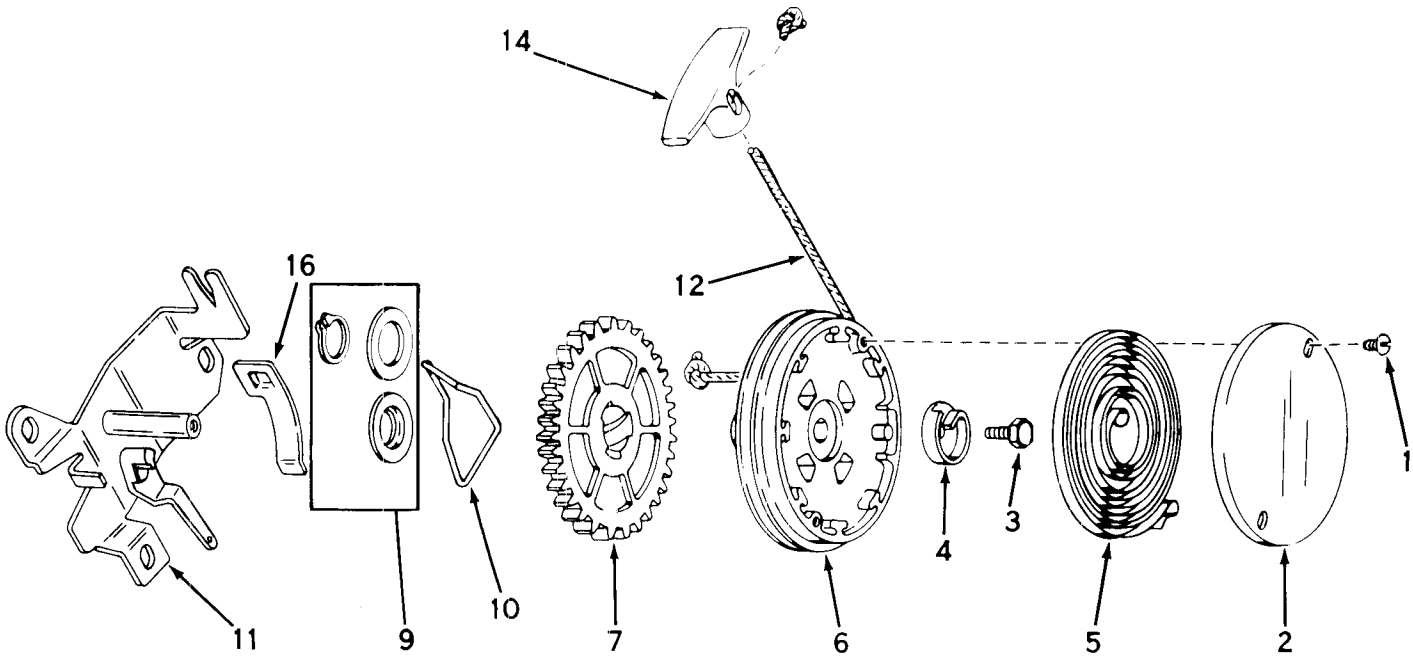

REWIND STARTER NO. 590519

Ref. No.	Part No.	Description	No. Used
1	590477	Screw, Cover	2
2	590431	Cover, Spring	1
3	590472	Screw, Hex Washer Hd. Taptite Left Hand Thread	1
4	590432	Hub, Spring	1
5	590433	Spring, Rewind	1
6	590434A	Pulley Assy. (Incl. Ref. #9)	1
7	590435B	Gear	1

Ref. No.	Part No.	Description	No. Used
9	590470	Kit, Thrust Washer & Snap Ring	1
10	590438	Brake	1
11	590520	Bracket Assy., Mounting	1
12	590451A	Rope, Starter (Length 69" and 5/32" Diameter)	1
14	590452	Handle, Starter	1
16	590446	Clip, Rope	1

THE TORO PROMISE

It is Toro's policy to design and produce TORO products to provide our customers with a high level of performance and durablility in normal operation. Our products, however, are produced in high volume, and it is inevitable that occasionally a unit will reach a customer with a defect in materials or workmanship which causes the unit to fall below the normal high level of TORO performance. Invariably, such a defect will be noticed in a residential product within one year after purchase. Recognizing this possibility, Toro has established a simple guarantee policy and procedure that is intended to assure customer satisfaction. This guarantee statement is as follows:

The Toro Promise

A One Year Limited Warranty

The Toro Company promises to repair any TORO Product if defective in materials or workmanship. The following time periods from the date of purchase apply:

Residential Product . . . . . 1 Year
Residential Products Used Commercially . . . . . 45 Days

The costs of parts and labor are included, but the customer pays the transportation costs. Just return any residential product to an Authorized TORO Service Dealer or TORO Distributor.

Should you feel your TORO is defective and wish to rely on The Toro Promise, the following procedure is recommended:

1. Contact any Authorized TORO Service Dealer, TORO Master Service Dealer, or TORO Distributor (the Yellow Pages of your telephone directory is a good reference source).
2. He will either instruct you to return the product to him or recommend another Authorized TORO Service outlet which might be more convenient.
3. Bring the product along with your original sales slip, or other evidence of purchase date, to the service dealer.
4. The servicing dealer will inspect the unit, advise you whether the product is defective and, if so, make all repairs necessary to correct the defect without extra charge to you.

If for any reason you are dissatisfied with the dealer's analysis of the defect or the service performed, you may contact us.

Write:

TORO Customer Service Department
8111 Lyndale Avenue South
Minneapolis, Minnesota 55420

The above remedy of product defects through repair by an Authorized TORO Service Dealer is the purchaser's sole remedy for any defect.

THERE IS NO OTHER EXPRESS WARRANTY. ALL IMPLIED WARRANTIES OF MERCHANTABILITY AND FITNESS FOR USE ARE LIMITED TO THE DURATION OF THE EXPRESS WARRANTY.

Some states do not allow limitation on how long implied warranty lasts, so the above limitation may not apply to you.

This Warranty applies only to parts or components which are defective and does not cover repairs necessary due to normal wear, misuse, accidents, or lack of proper maintenance. Regular, routine maintenance of the unit to keep it in proper operating condition is the reponsibility of the owner.

All warranty repairs reimbursable under The Toro Promise must be performed by an Authorized TORO Service Dealer using Toro approved replacement parts.

Repairs or attempted repairs by anyone other than an Authorized TORO Service Account are not reimbursable under The Toro Promise. In addition, these unauthorized repair attempts may result in additional malfunctions, the correction of which is not covered by warranty.

The Toro Company is not liable for indirect, incidental or consequential damages in connection with the use of the product including any cost or expense of providing substitute equipment or service during periods of malfunction or non-use.

Some states do not allow the exclusion of incidental or consequential damages, so the above exclusion may not apply to you.

This warranty gives you specific legal rights, and you may also have other rights which vary from state to state.

Compliance with Radio Interference Regulations Certified.
Certifie Conforme au Reglement sur le Brouillage Radioelectrique.

Litho in U.S.A.

PRODUCT CHANGES

In an effort to make improvements available to TORO owners as quickly as possible, minor changes are incorporated into Toro's products from time to time that do not become immediately shown in the Parts Catalog. If such a change apparently has been made in your unit, which is not reflected in your manual, see your TORO Distributor or his Authorized TORO Service Dealer for information and part numbers.

IDENTIFICATION AND ORDERING

Model and Serial Numbers

The mower has two identification numbers: a model number and a serial number. The two numbers are stamped on a decal which is located on the mower housing between the rear wheels. In any correspondence concerning the mower, supply model and serial numbers to assure that correct information and replacement parts are obtained.

To order replacement parts from an Authorized TORO Distributor, supply the following information:

1. Model and serial numbers of the mower.
2. Part number, description, and quantity of part(s) desired.

NOTE: Do not order by reference number if a parts catalog is being used; use the PART NUMBER.

Keep Your TORO All Toro Genuine TORO PARTS & ACCESSORIES ***Insist on Genuine Toro Parts***

MAINTENANCE RECORD

Date	Hours Used	Oil Change	Air Cleaner Service	Lubrication	Winter Storage	Spring Service	Spark Plug Gap

MAINTENANCE RECORD

Date	Hours Used	Oil Change	Air Cleaner Service	Lubrication	Winter Storage	Spring Service	Spark Plug Gap

MAINTENANCE RECORD

Date	Hours Used	Oil Change	Air Cleaner Service	Lubrication	Winter Storage	Spring Service	Spark Plug Gap