Form No. 3326-601

42 Inch Single Stage Snowthrower

Wheel Horse® 300 Series Garden Tractor Attachment

Model No. 79362—220000001 and Up

Parts Catalog

Ordering Replacement Parts

To order replacement parts, please supply: the part number, the quantity, and the description of each part desired.

Understanding Reference Numbers

Each identified part in an illustration has a reference number. The reference number for a part also appears in the parts list, along with other information about the part.

This catalog uses two special reference number formats, one to indicate parts in a service assembly and another to indicate the quantity of a given part in an illustration.

Service Assembly Reference Numbers

Parts in service assemblies have reference numbers in the form **a:b.** The **a** represents the reference number of the entire service assembly and the **b** represents a sequential number unique to each part within the service assembly.

For example, a wheel assembly might be identified by reference number **6**, the tire by **6:1**, the valve by **6:2**, and the wheel by **6:3**. When you order the assembly identified by reference number 6, you receive all parts identified by reference numbers 6:1, 6:2, and 6:3. However, you may also order any part individually.

Reference numbers of this type appear in illustrations and in part lists.

Reference Numbers Indicating Quantity

In an illustration, if a reference number indicates more than one part, the reference number has the form **nX y.** The **n** represents the quantity of the part, the **X** is the multiplication symbol, and the **y** represents the reference number.

For example, in an illustration, the reference number **2X 37** means that two of the parts identified by reference number 37 are indicated.

© The TORO Company — 2001
All Rights Reserved

Contents

Description	Page
Housing and Attachment Assembly	3
Chute and Rotation Assembly	4
Auger and Drive Assembly	5

Description	Page

Part Description Abbreviations

Part descriptions in this catalog may include the following abbreviations.

Abbreviation	Meaning
AR	as required
ASM	assembly
CARR	carriage
DEG	degrees
FH	flat head
GA	gauge
HF	hex flange
HH	hex head
HHF	hex head flange
HLH	hex lag head
HJ	hex jam
HOC	height-of-cut
HS	hex socket
HSBH	hex socket button head
HSFH	hex socket flat head
HSH	hex socket head
HWH	hex washer head
HWHTF	hex washer head thread forming
HYD	hydraulic
INC	incorporated
LH	left hand
NI	nylon insert
PPH	Phillips pan head
PTH	Phillips truss head
PTO	power take off
RH	right hand
SFH	slotted fillister head
SHH	slotted hex head
SQH	square head
SHWH	slotted hex washer head
SPH	slotted pan head
SRH	slotted round head
STD	standard
TAP	self tapping
TTH	Torx truss head
WH	wing head

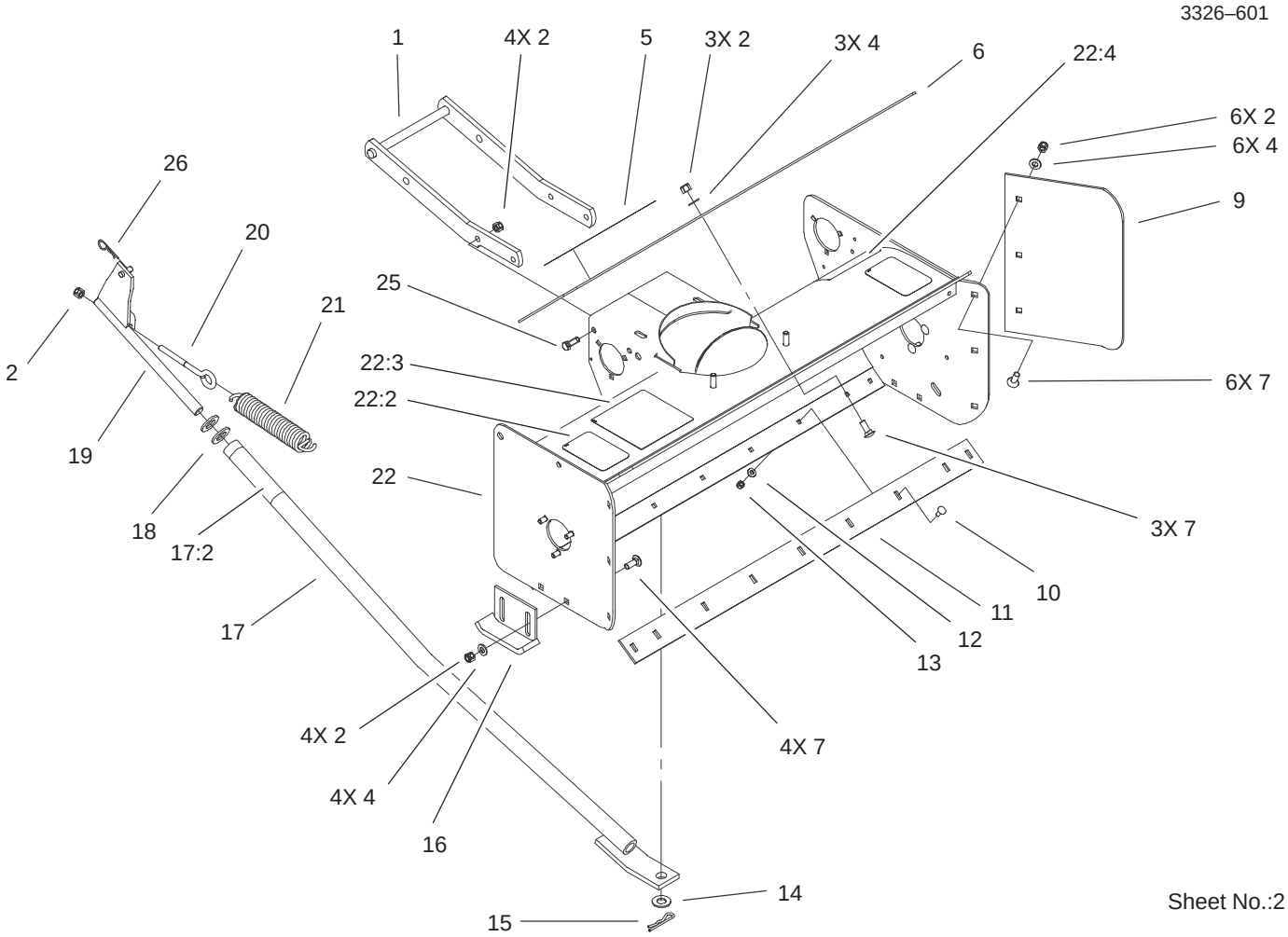

Housing and Attachment Assembly

Ref. No.	Part No.	Qty.	Description
1	104604–01	1	Frame–Mounting
2	3296–39	18	Nut–Lock, NI
4	3256–24	13	Washer–Flat
5	92–8748	1	Decal–Attachment
6	93–1616–01	1	Plate–Extension
7	3231–2	13	Screw–CARR
9	93–1617–01	2	Plate–Extension, RH
10	3229–25	9	Screw–CARR
11	79–6170–01	1	Scraper–Reversible
12	3256–22	9	Washer–Flat
13	3296–42	9	Nut–Lock, NI
14	3256–27	1	Washer–Flat
15	9335064	1	Pin–Cotter, Hair
16	93–1620–01	2	Skid
17	105–1401	1	Lift Tube W/Decal ASM
17:2	86–5100	1	Decal – Warning
18	3256–28	2	Washer–Flat
19	101461–01	1	Rod–Lift
20	100653	1	Eyebolt
21	4629	1	Spring
22	92–7299	1	Auger W/Decals ASM
22:2	63–2380	2	Decal–Danger
22:3	92–8652	1	Decal–Warning
22:4	86–5100	1	Decal – Warning

Ref. No.	Part No.	Qty.	Description
25	323–6	4	Screw–HH
26	9335054	1	Pin–Hair

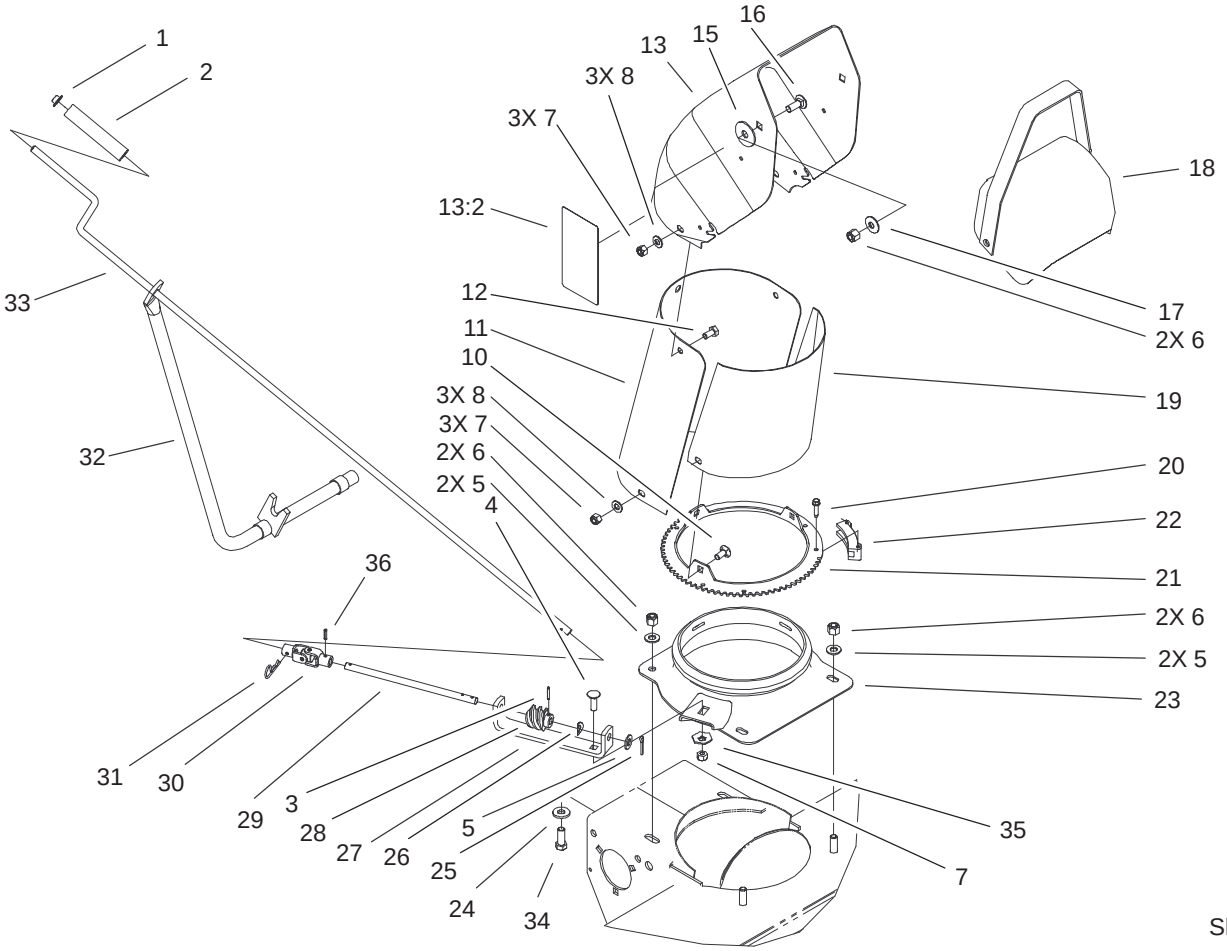

Sheet No.:3

Chute and Rotation Assembly

Ref. No.	Part No.	Qty.	Description
1	3290–320	1	Retainer–Push On
2	40–8230	1	Grip–Chute Control
3	32121–50	1	Pin–Spring
4	3230–2	1	Screw–CARR
5	3256–24	5	Washer–Flat
6	3296–39	6	Nut–Lock, NI
7	3296–29	7	Nut–Lock, NI
8	3256–23	6	Washer–Flat
10	3230–1	3	Screw–CARR
11	26–1110–01	1	Extender–Chute, Upper
12	322–2	3	Screw–HH
13	94–1832	1	Chute
13:2	94–8079	1	Decal–Danger
15	20–4320	2	Washer–Rubber
16	3231–2	2	Screw–CARR
17	3290–340	2	Washer–Belleville
18	11–7120–01	1	Deflector
19	94–9787–01	1	Shield–Deflector
20	27–0220	6	Screw–Special
21	78–0160–01	1	Chute Swivel Ring
22	25–5450	3	Retainer–Chute
23	78–0330–01	1	Adapter
24	9202414	2	Washer–Spacer
25	3272–10	1	Pin–Cotter
26	3290–212	1	Washer–Spring

Ref. No.	Part No.	Qty.	Description
27	79–3770–03	1	Bracket–Worm
28	8–8600	1	Gear–Worm, Chute
29	78–7430	1	Rod
30	94–2686	1	Joint–Universal
31	9335054	1	Pin–Hair
32	104–4695–01	1	Crank Support ASM
33	51–2650	1	Rod–Chute Control
34	323–6	2	Screw–HH
35	3290–238	1	Washer–Lock
36	32121–47	1	Pin–Spring

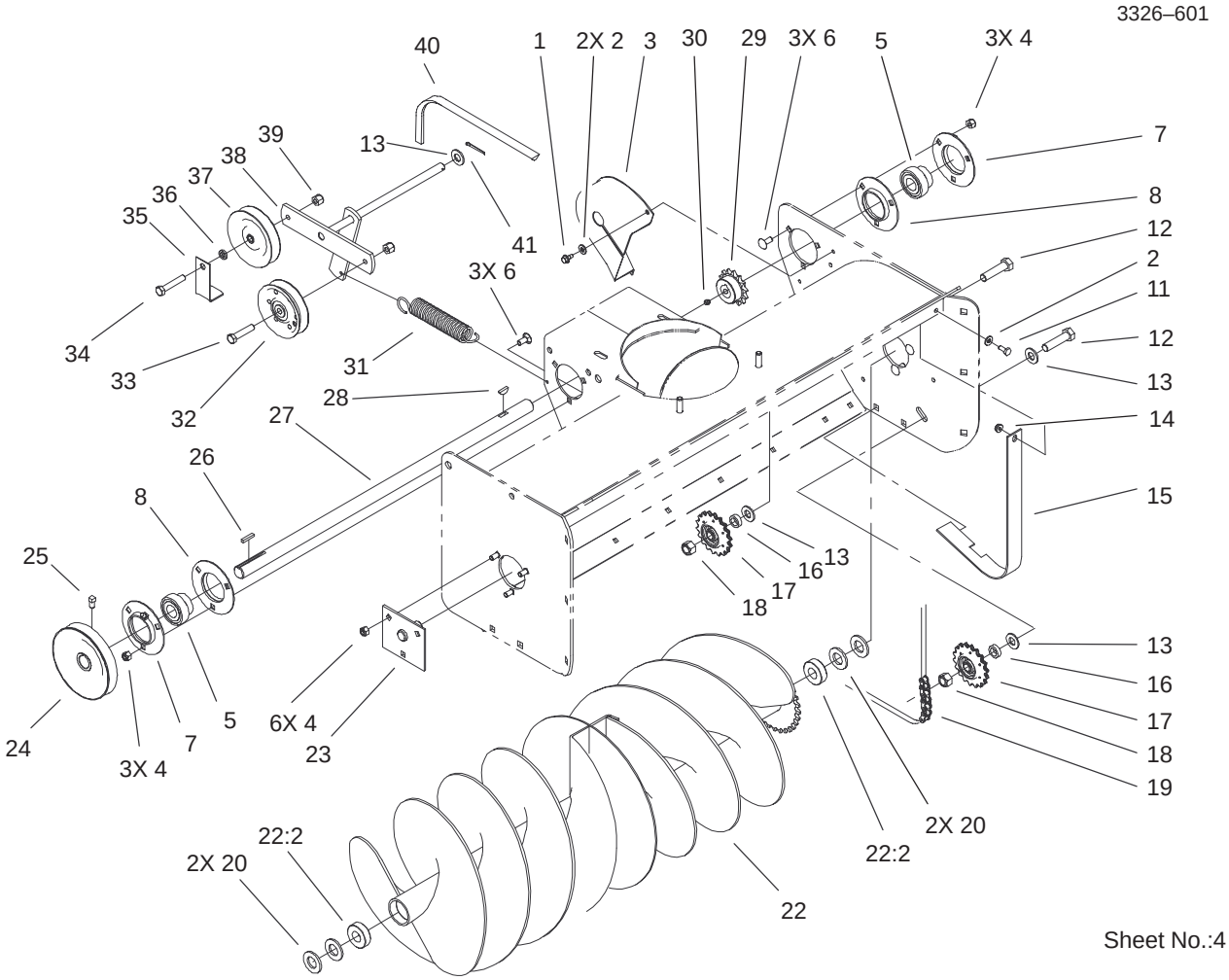

Auger and Drive Assembly

Ref. No.	Part No.	Qty.	Description
1	9266714	2	Screw–HWH
2	3256–22	3	Washer–Flat
3	109218	1	Guard–Chain
4	3296–29	12	Nut–Lock, NI
5	110569	2	Bearing & Collar
6	3230–1	6	Screw–CARR
7	110567	2	Flange–Zerk Relube
8	110568	2	Flange
11	321–3	1	Screw–HH
12	325–8	2	Screw–HH
13	3256–26	4	Washer–Flat
14	32149–2	1	Nut
15	109244–01	1	Guard–Chain
16	6417	2	Spacer
17	93–1614	2	Sprocket–Idler
18	3296–23	2	Nut–Lock, NI
19	6416	1	Chain
20	3256–28	4	Washer–Flat
22	105–1478	1	Auger ASM
22:2	101480	2	Bearing–Ball
23	93–1618–01	2	Support
24	94–7842	1	Pulley – V
25	3242–2	2	Screw–SQH
26	1005	1	Key–Straight
27	113320–01	1	Shaft–Drive
28	937089	1	Key

Ref. No.	Part No.	Qty.	Description
29	78–0850–01	1	Sprocket–Drive,14 Tooth
30	3246–2	1	Setscrew–HSH
31	78–7480	1	Spring–Extension
32	92–7101	1	Pulley–Flat Idler
33	323–9	1	Screw–HH
34	323–10	1	Screw–HH
35	7450–01	1	Bracket–Retainer,Belt
36	104662	1	Spacer
37	7451	1	Pulley–Idler
38	78–0480–01	1	Arm–Idler
39	3296–39	2	Nut–Lock, NI
40	9750	1	V–Belt
41	3272–7	1	Pin–Cotter

Maintenance Record

Date								

Maintenance Record

Date								

TORO®