1978

FORM NO. 3311-214

TORO

MODEL NO. 20700—8000001 & UP

**PARTS CATALOG**

# 21" H.P. REAR BAGGER

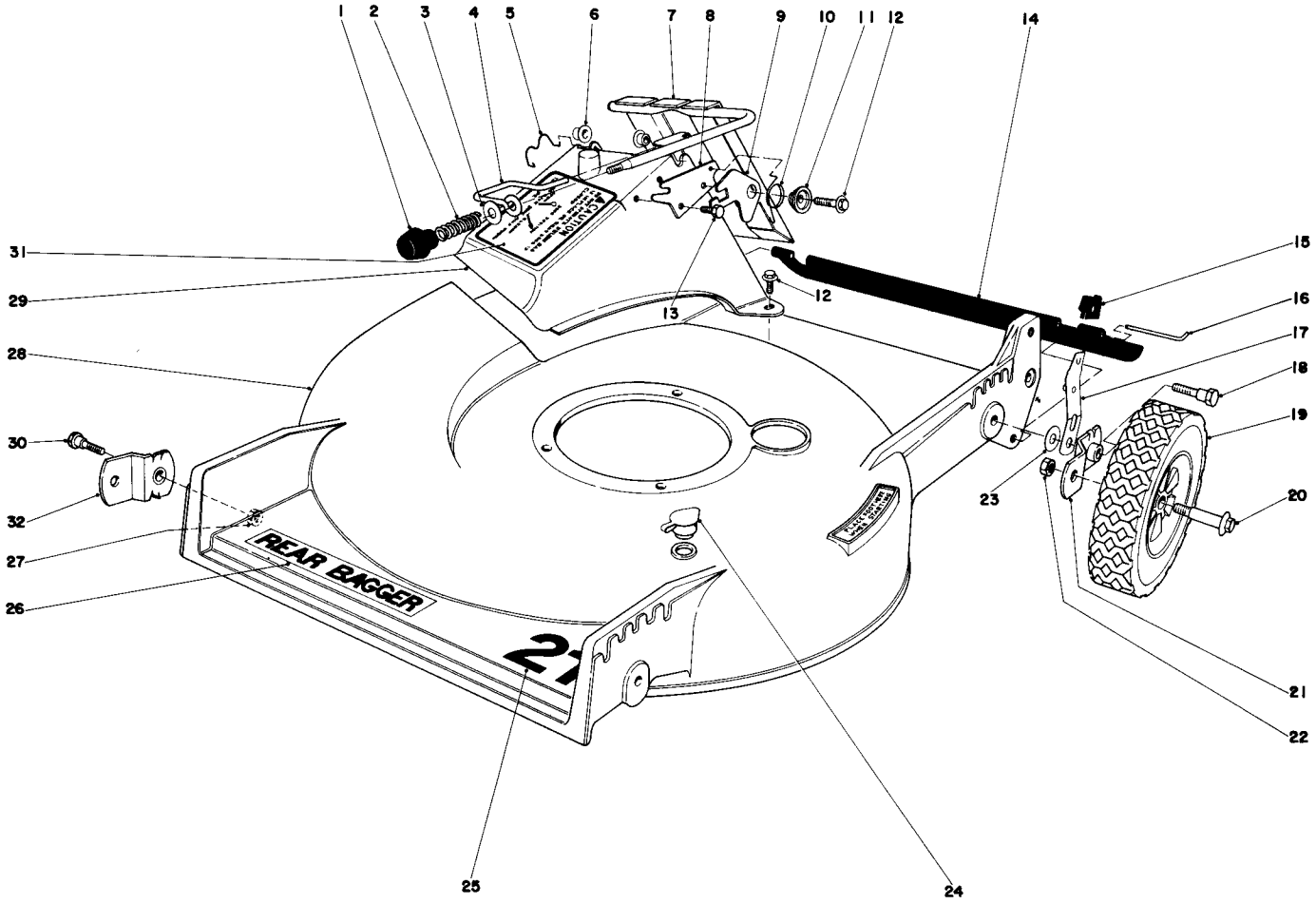


## HOUSING ASSEMBLY

| Ref. No. | Part No. | Description | No. Used |
|---|---|---|---|
| 1 | 233-37 | Knob | 1 |
| 2 | 23-0920 | Spring Compression | 1 |
| 3 | 23-1120 | Washer | 1 |
| 4 | 23-0940 | Latch Door | 1 |
| 5 | 33-4830 | Door Retainer | 1 |
| 6 | 23-0880 | Bushing | 2 |
| 7 | 33-5660 | Door Handle | 1 |
| 8 | 23-1040 | Latch Plate | 1 |
| 9 | 23-1190 | Latch Safety | 1 |
| 10 | 33-4860 | Spring Torsion | 1 |
| 11 | 23-1180 | Latch Spacer | 1 |
| 12 | 11-9760 | Screw Thread Forming | 3 |
| 13 | 32104-17 | Screw Hex. Hd. Self Tapping | 1 |
| 14 | 29-9180 | Rear Safety Shield | 1 |
| 15 | 25-7740 | Knob Arm | 4 |
| 16 | 33-3203 | Shield Rod | 1 |

| Ref. No. | Part No. | Description | No. Used |
|---|---|---|---|
| 17 | 33-4850 | Spring Arm Assembly | 4 |
| 18 | 3-0655 | Pivot Screw | 2 |
| 19 | 27-6200 | Wheel & Tire Assembly | 4 |
| 20 | 27-6230 | Wheel Bolt | 4 |
| 21 | 24-7710 | Pivot Arm "A" | 2 |
| 22 | 32146-6 | Nut | 4 |
| 23 | 5-4460 | Pivot Washer | 4 |
| 24 | 6-4500 | Washout Plug | 1 |
| 25 | 36-1030 | Decal 21" | 1 |
| 26 | 33-2320 | Decal | 1 |
| 27 | 32146-5 | Nut | 4 |
| 28 | 8-2299 | Housing | 1 |
| 29 | 36-1350 | Discharge Chute | 1 |
| 30 | 25-3440 | Pivot Screw | 2 |
| 31 | 37-7490 | Decal Caution | 1 |
| 32 | 23-9120 | Pivot Arm "B" | 2 |

*Not Illustrated

COPYRIGHT © ALL RIGHTS RESERVED

The Toro Company — 1978
MINNEAPOLIS, MN 55420 — U.S.A.

PRICE $1.00

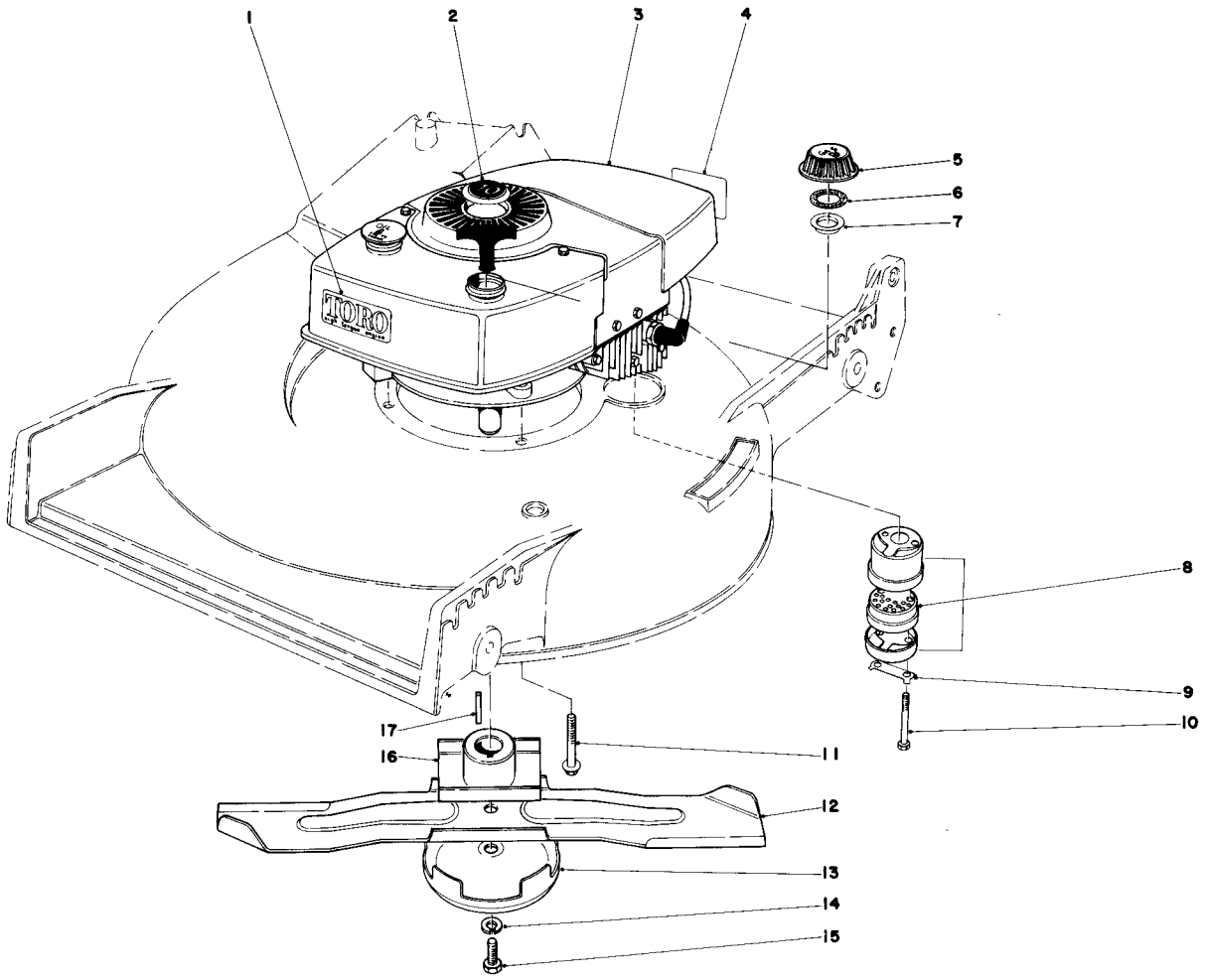


# ENGINE ASSEMBLY

| Ref. No. | Part No. | Description | No. Used |
|---|---|---|---|
| 1 | 23-1260 | Decal High Torque | 1 |
| 2 | 21-4870 | Plug Button | 1 |
| 3 | 221-578 | Engine | 1 |
| 4 | 37-1580 | Decal – Maintenance | 1 |
| 5 | 27-7870 | Gas Cap (Incl. Ref. #6 & 7) | 1 |
| 6 | 2210-144 | Gasket – Gas Cap | 1 |
| 7 | 2210-143 | Baffle – Gas Cap | 1 |
| 8 | 5-4769 | Muffler Assembly (Incl. Ref. # 9 & 10) | 1 |
| 9 | 3-5094 | Locking Clip | 1 |

| Ref. No. | Part No. | Description | No. Used |
|---|---|---|---|
| 10 | 321-20 | Screw Hex Hd. | 2 |
| 11 | 11-0590 | Screw | 3 |
| 12 | 26-0880 | Blade | 1 |
| 13 | 8-4240 | Cup-Anti Scalp | 1 |
| 14 | 3253-22 | Lockwasher | 1 |
| 15 | 23-0080 | Screw Blade | 1 |
| 16 | 23-0110 | Retainer Blade | 1 |
| 17 | 7-0036 | Key Square | 1 |
| * | 8-2199 | Loose Parts Bag | 1 |

*Not Illustrated

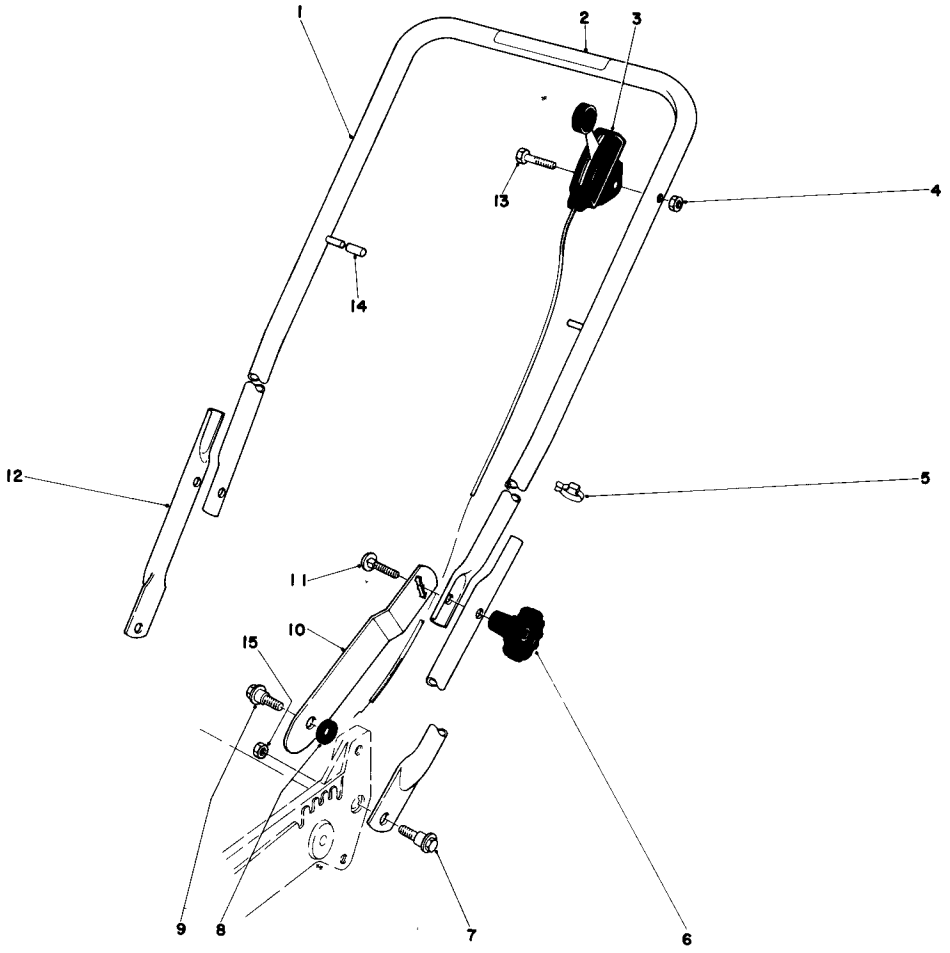


# HANDLE ASSEMBLY

| Ref. No. | Part No. | Description | No. Used |
|---|---|---|---|
| 1 | 36-6850 | Upper Handle | 1 |
| 2 | 29-6290 | Decal | 1 |
| 3 | 33-2531 | Throttle Control | 1 |
| 4 | 32146-17 | Locknut | 1 |
| 5 | 218-465 | Clip | 1 |
| 6 | 19-4050 | Knob Handle | 2 |
| 7 | 27-7210 | Shoulder Screw | 2 |
| 8 | 3-3287 | Spacer Handle Latch | 2 |

| Ref. No. | Part No. | Description | No. Used |
|---|---|---|---|
| 9 | 5-2490 | Shoulder Screw | 2 |
| 10 | 36-6900 | Latch Handle L.H. | 1 |
| * | 36-6890 | Latch Handle R.H. | 1 |
| 11 | 3230-5 | Carriage Bolt | 2 |
| 12 | 29-9160 | Handle Lower | 2 |
| 13 | 321-10 | Capscrew | 1 |
| 14 | 2410-49 | Vinyl Cap | 2 |
| 15 | 32146-5 | Nut | 2 |

* Not Illustrated

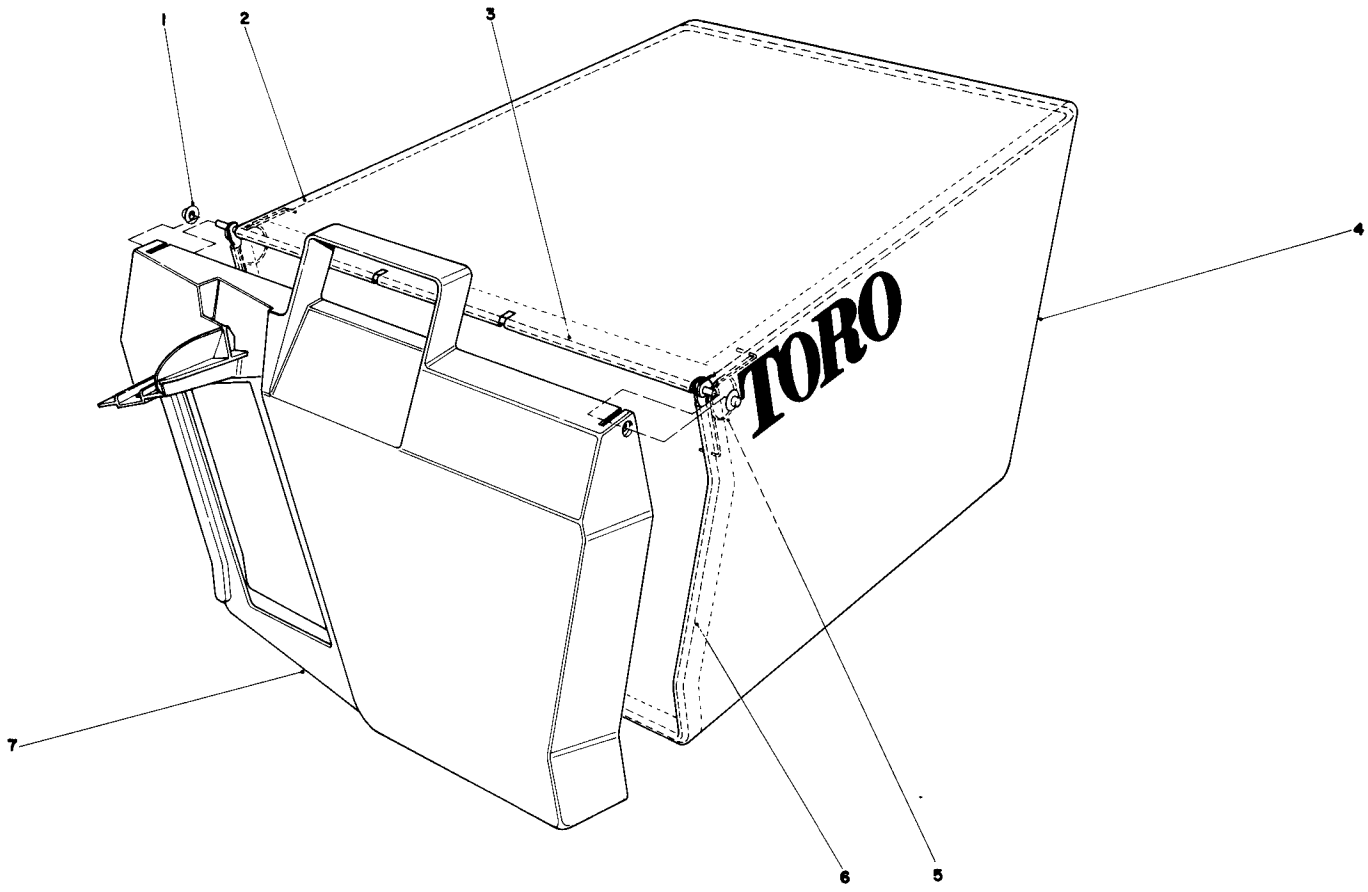


# GRASS BAG ASSEMBLY

| Ref. No. | Part No. | Description | No. Used |
|---|---|---|---|
| 1 | 3290-422 | Push Nut | 2 |
| 2 | 36-6870 | Bag Frame Upper | 1 |
| 3 | 33-4820 | Hinge Bag Door | 1 |
| 4 | 33-5690 | Grass Bag | 1 |

| Ref. No. | Part No. | Description | No. Used |
|---|---|---|---|
| 5 | 36-6910 | Spring | 2 |
| 6 | 36-0710 | Frame Bag | 1 |
| 7 | 36-1330 | Door Grass Bag | 1 |

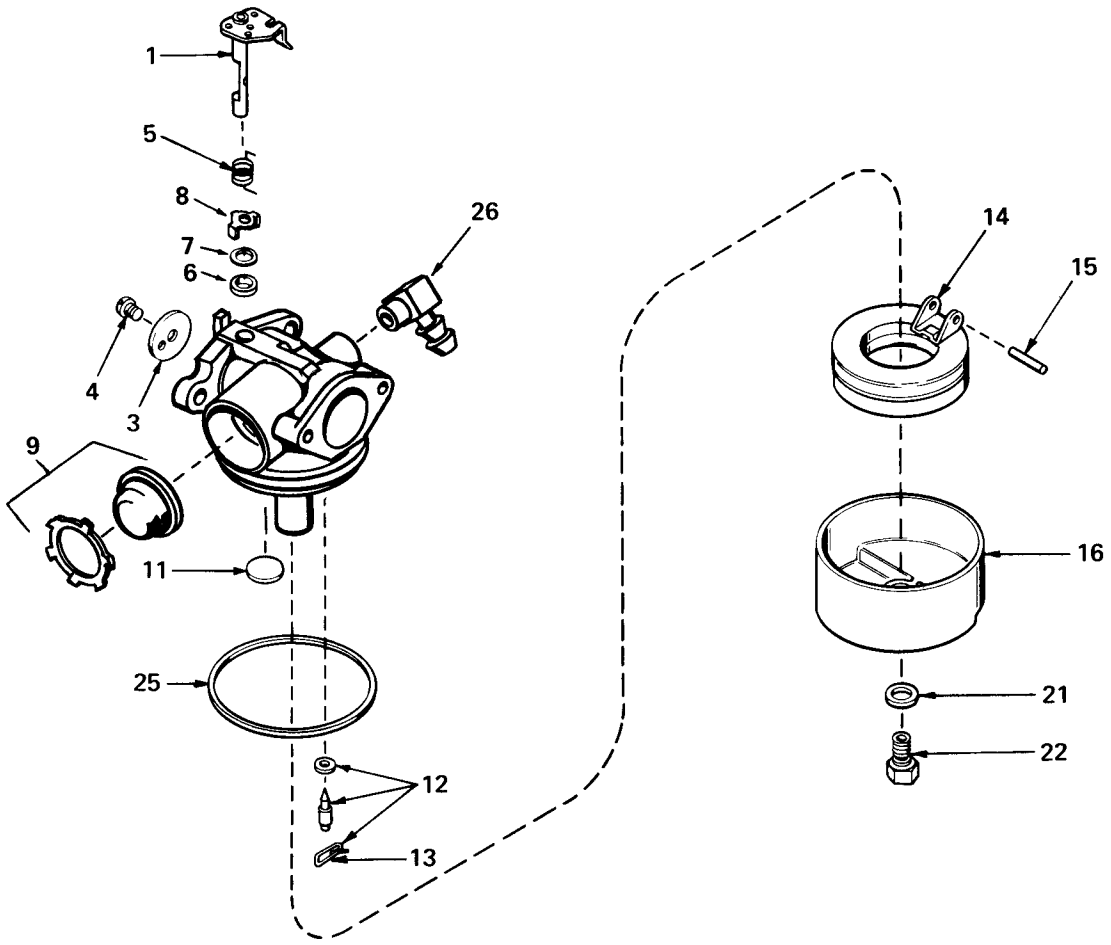


# CARBURETOR NO. 632050

| Ref. No. | Part No. | Description | No. Used |
|---|---|---|---|
| 1 | 631615 | Shaft & Lever Assembly, Throttle | 1 |
| 3 | 631616 | Shutter, Throttle | 1 |
| 4 | 650506 | Screw, Throttle Shutter | 1 |
| 5 | 632016 | Spring, Return | 1 |
| 6 | 631971 | Seal, Dust | 1 |
| 7 | 631184 | Washer | 1 |
| 8 | 631972 | Retainer, Dust Seal | 1 |
| 9 | 632047 | Bulb & Retainer, Primer | 1 |
| 11 | 631027 | Plug, Welch | 1 |

| Ref. No. | Part No. | Description | No. Used |
|---|---|---|---|
| 12 | 631021 | Inlet Needle, Seat & Clip Assemble (Incl. Ref. #13) | 1 |
| 13 | 631022 | Clip, Inlet Needle | 1 |
| 14 | 632019 | Float, Carburetor | 1 |
| 15 | 631024 | Shaft, Float | 1 |
| 16 | 631700 | Bowl, Float | 1 |
| 21 | 631334 | Gasket, Bowl-To-Body | 1 |
| 22 | 631935 | Nut, Float Bowl | 1 |
| 25 | 631028 | Gasket, Bowl-To-Body | 1 |
| 26 | 631807 | Fitting, Fuel Inlet | 1 |

# ENGINE TECUMSEH MODEL TNT 100-10049B

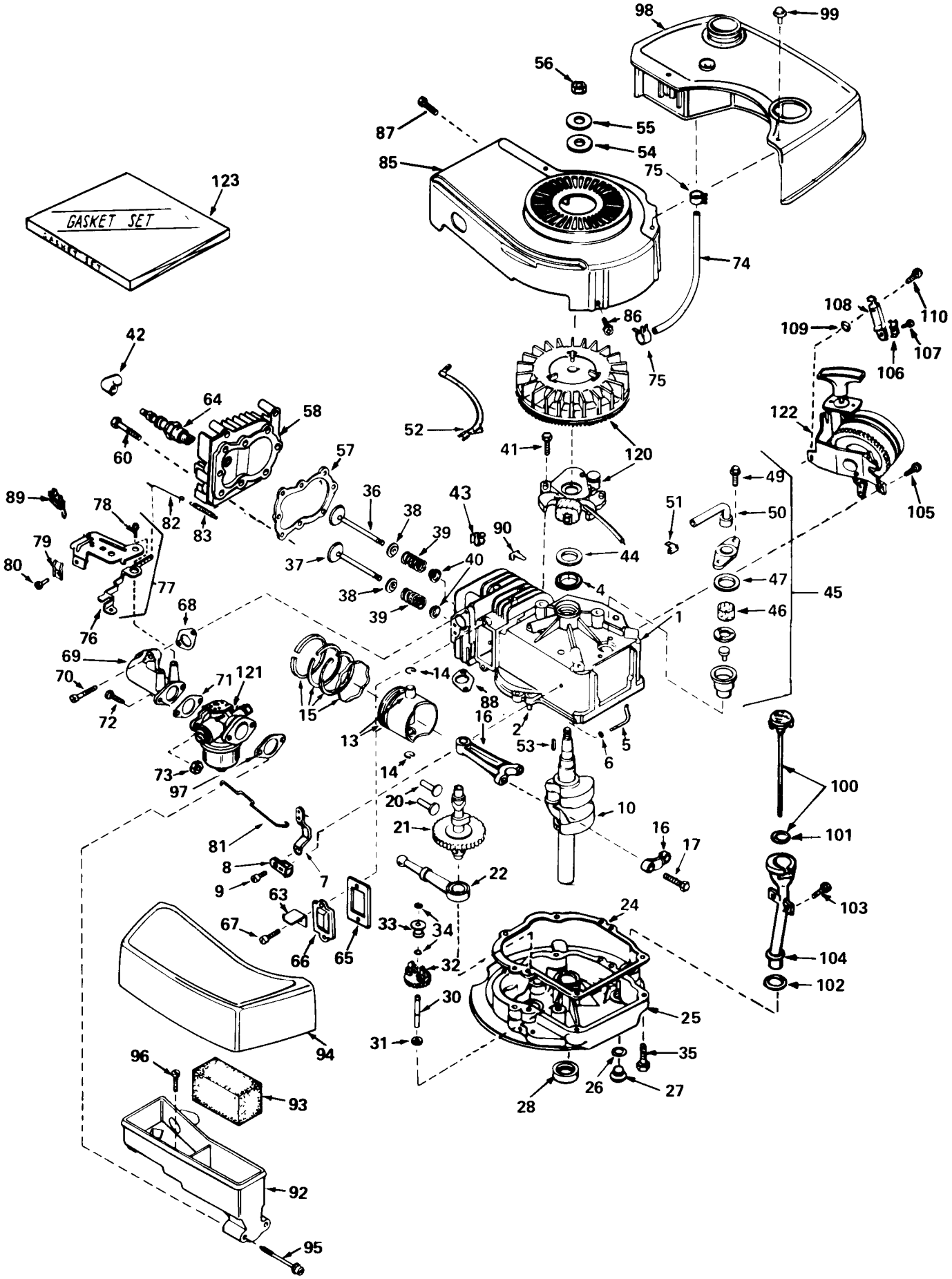

# ENGINE TECUMSEH MODEL TNT 100-10049B

| Ref. No. | Part No. | Description | No. Used |
|---|---|---|---|
| 1 | 33883 | Cylinder Assembly, (Incl. Ref. #2, 4 & 105) | 1 |
| 2 | 26727 | Pin, Dowel | 2 |
| 4 | 29183 | Seal, Oil | 1 |
| 5 | 30589 | Rod, Governor (Incl. Ref. #6) | 1 |
| 6 | 28277 | Washer, Flat | 1 |
| 7 | 32651 | Lever, Governor | 1 |
| 8 | 31335 | Clamp, Governor Lever | 1 |
| 9 | 650548 | Screw, Hex Slotted Washer Hd. | 1 |
| 10 | 34233A | Crankshaft | 1 |
| 13 | 32603A | Piston, Pin & Ring Assy. (Incl. Ref. #14 & 15)(Std.) | 1 |
| 13 | 32604A | Piston, Pin & Ring Assy. (Incl. Ref. #14 & 15)(.010 oversize) | 1 |
| 13 | 32605A | Piston, Pin & Ring Assy. (Incl. Ref #14 & 15)(.020 oversize) | 1 |
| 14 | 20381 | Ring, Piston Pin Retaining | 2 |
| 15 | 32606 | Ring Set, Piston (Std.) | 1 |
| 15 | 32607 | Ring Set, Piston (.010 oversize) | 1 |
| 15 | 32608 | Ring Set, Piston (.020 oversize) | 1 |
| 16 | 30963B | Rod Assy.,Connecting (Incl. Ref. #17) | 1 |
| 17 | 32610A | Bolt, Connecting Rod | 2 |
| 20 | 27241 | Lifter, Valve | 2 |
| 21 | 33553 | Camshaft (Mech. Comp. Release) | 1 |
| 22 | 29914 | Pump Assembly, Oil | 1 |
| 24 | *26750A | Gasket, Mounting Flange | 1 |
| 25 | 30594B | Flange Assy., Mounting (Incl. Ref #26 thru 30) | 1 |
| 26 | *28833 | Gasket, Oil Drain Plug | 1 |
| 27 | 27244 | Plug, Oil Drain | 1 |
| 28 | 26208 | Seal, Oil | 1 |
| 30 | 30574 | Shaft, Mechanical Governor | 1 |
| 31 | 30590A | Washer, Flat | 1 |
| 32 | 30591 | Gear Assy., Governor (Incl. #31) | 1 |
| 33 | 30588A | Spool, Governor | 1 |
| 34 | 29193 | Ring, Retaining | 2 |
| 35 | 650488 | Screw, Hex Hd. Sems | 6 |
| 36 | 29314A | Valve, Intake (Std.) (Incl. Ref #38, 39 & 40) | 1 |
| 36 | 29315B | Valve, Intake (1/32" oversize) (Incl. Ref #38, 39 & 40) | 1 |
| 37 | 29313B | Valve, Exhaust (Std.) (Incl. Ref #38, 39 & 40) | 1 |
| 37 | 29315B | Valve, Exhaust (1/32" oversize) (Incl. Ref #38, 39 & 40) | 1 |
| 38 | 31671 | Cap, Upper Valve Spring | 2 |
| 39 | 31672 | Spring, Valve | 2 |
| 40 | 31673 | Cap, Lower Valve Spring | 2 |
| 41 | 650489 | Screw, Hex Hd. Sems | 2 |
| 42 | 610118 | Cover, Spark Plug | 1 |
| 43 | 27275 | Clip, Lead Wire | 1 |
| 44 | 33876 | Gasket, Stator | 1 |
| 45 | 34214 | Breather Assy., (Incl. Ref # 46, 47, 49, 50 & 51) | 1 |
| 46 | 33734 | Element, Breather | 1 |
| 47 | *33735 | Gasket, Breather | 1 |
| 49 | 650768 | Screw, Hex Hd. Thread Forming w/Conical Washer | 2 |
| 50 | 33886 | Tube, Breather | 1 |
| 51 | 33887 | Clip, Breather Tube | 1 |
| 52 | 34230 | Wire, Ground | 1 |
| 53 | 610961 | Key, Flywheel | 1 |
| 54 | 650791 | Washer, Flat | 1 |
| 55 | 650763 | Washer, Belleville | 1 |
| 56 | 650607 | Nut, Flywheel | 1 |
| 57 | *33015 | Gasket, Cylinder Head | 1 |
| 58 | 34342 | Head, Cylinder | 1 |
| 60 | 6021A | Screw, Hex Flange Hd. | 8 |

| Ref. No. | Part No. | Description | No. Used |
|---|---|---|---|
| 63 | 30593 | Clip, Magneto Wire | 1 |
| 64 | 33636 | Plug, Spark (Champion J-8 or equivalent) Except for Canada | 1 |
| 64 | 34251 Canada | Resistor Spark Plug (Canadian Regulations require RJ-17 LM resistor spark plug) | 1 |
| 65 | *27234 | Gasket, Valve Spring Cover | 1 |
| 66 | 32755 | Cover, Valve Spring Box | 1 |
| 67 | 650128 | Screw, Fil. Slotted Hd. Sems | 2 |
| 68 | *32649 | Gasket, Intake Pipe | 1 |
| 69 | 33004 | Pipe, Intake | 1 |
| 70 | 650451 | Screw, Hex Hd. Sems | 2 |
| 71 | *31688 | Gasket, Carburetor | 1 |
| 72 | 6201 | Screw, Hex Hd. Cap | 2 |
| 73 | 29752 | Nut & Lockwasher Assy. | 2 |
| 74 | 30705 | Line, Fuel | 1 |
| 75 | 26460 | Clamp, Fuel Line | 2 |
| 76 | 34310 | Lever, Control | 1 |
| 77 | 33889A | Control Assy., Speed (Incl. Ref # 76, 78 & 89) | 1 |
| 78 | 650804 | Screw, Hex Washer Hd. Shoulder Self-Tap | 1 |
| 79 | 27793 | Clip, Conduit | 1 |
| 80 | 28942 | Screw, Hex Hd. Sems | 1 |
| 81 | 34336 | Link, Governor-to-Throttle | 1 |
| 82 | 33151 | Link, Governor Spring | 1 |
| 83 | 33890 | Spring, Governor | 1 |
| 85 | 33891A | Housing, Blower | 1 |
| 86 | 650497 | Screw, Flex Pan Hd. | 2 |
| 87 | 30200 | Screw, Hex Washer Hd. Self-Tap Sems | 2 |
| 88 | *30081 | Gasket, Exhaust | 1 |
| 89 | 610973 | Terminal Assy. | 1 |
| 90 | 29443 | Clip, Fuel Line | 1 |
| 92 | 33895 | Body, Air Cleaner | 1 |
| 93 | 33896 | Filter, Air Cleaner | 1 |
| 94 | 33897 | Cover, Air Cleaner | 1 |
| 95 | 650762 | Screw, Fil. Hd. Sems | 2 |
| 96 | 650784 | Screw, Hex Hd. w/Flatwasher Taptite | 1 |
| 97 | *33051 | Gasket, Air Cleaner | 1 |
| 98 | 33904A | Tank, Fuel | 1 |
| 99 | 28763 | Screw, Hex Washer Hd. Shakeproof | 2 |
| 100 | 33894A | Dipstick, Oil (Incl. Ref. # 101) (Twist Lock) | 1 |
| 101 | 33590 | "O" Ring | 1 |
| 102 | 34265 | Gasket | 1 |
| 103 | 650562 | Screw, Hex Washer Hd. Shakeproof | 2 |
| 104 | 34380 | Tube, Oil Filler (Plastic) | 1 |
| 105 | 650737 | Screw, Hex Washer Hd. Taptite | 2 |
| 106 | 27793 | Clip, Conduit | 1 |
| 107 | 28942 | Screw, Slotted Hex Hd. Sems | 1 |
| 108 | 34099 | Bracket | 1 |
| 109 | 27070 | Washer, Lock | 1 |
| 110 | 650738 | Screw, Hex Washer Spinlock Hd. Thread Forming | 1 |
| 120 | 610793A | Magneto (The complete magneto is not available as an assembly. The magneto number is shown for reference purposes only. Order component parts individually, as shown in parts list.) | 1 |
| 121 | 632050 | Carburetor (Incl. Ref. # 71) | 1 |
| 122 | 590519 | Starter, Side Mount | 1 |
| 123 | 33906 | Gasket Set (Incl. items marked*) | 1 |

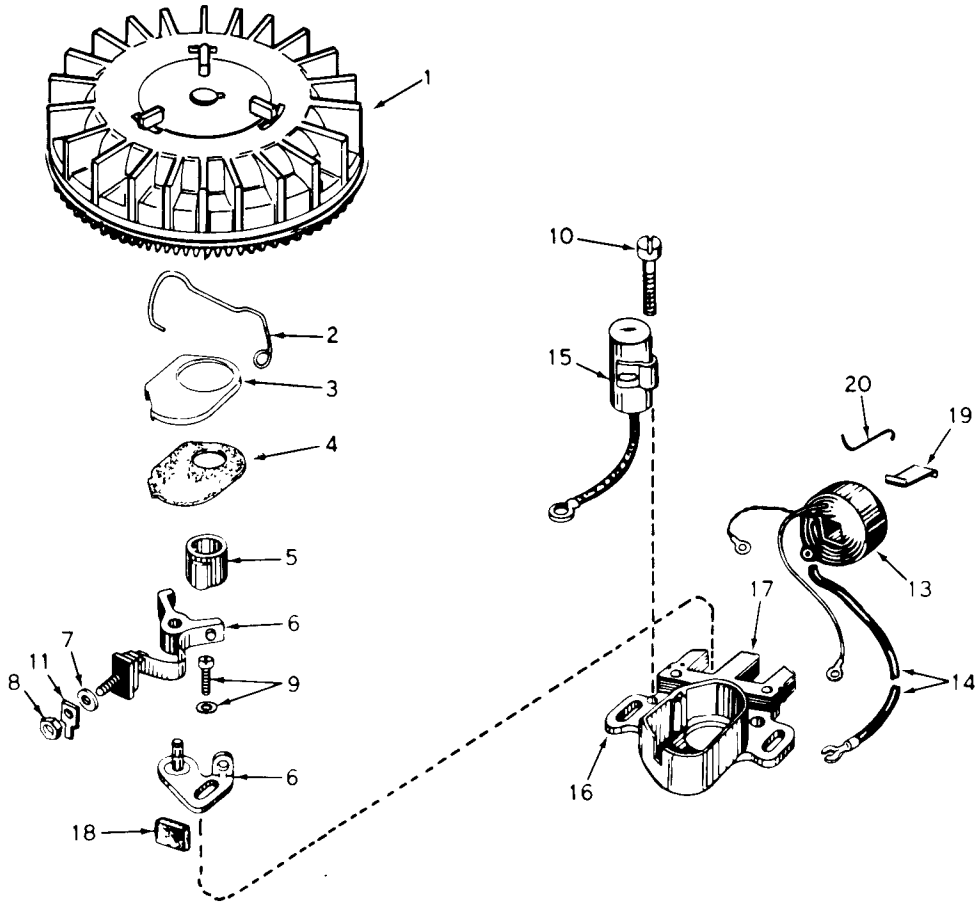


# MAGNETO NO. 610793A

| Ref. No. | Part No. | Description | No. Used |
|---|---|---|---|
| 1 | 610782A | Flywheel (Incl. Ref. #3 & 4) | 1 |
| 2 | 30551 | Spring, Breaker Box Dust Cover | 1 |
| 3 | 610947 | Cover, Breaker Box Dust | 1 |
| 4 | 610948 | Gasket, Dust Cover | 1 |
| 5 | 30552 | Cam, Breaker | 1 |
| 6 | 30547A | Breaker Assembly | 1 |
| 7 | 610385 | Washer, Terminal | 1 |
| 8 | 610408 | Nut, Terminal | 1 |
| 9 | 29181 | Screw & Washer Assembly, Breaker | 1 |
| 10 | 610593 | Screw, Condenser Fastening | 1 |

| Ref. No. | Part No. | Description | No. Used |
|---|---|---|---|
| 11 | 33356 | Tab, Ground Terminal | 1 |
| 13 | 30560A | Coil Assembly (Incl. Ref. #14) | 1 |
| 14 | 30554 | Wire, Ignition Lead | 1 |
| 15 | 30548A | Condenser | 1 |
| 16 | 30545 | Core & Plate Group | 1 |
| 17 | 30561B | Stator Assembly (Incl. Ref. #2, 3, 4, 6 thru 16, 18, 19 & 20) | 1 |
| 18 | 30549 | Felt, Cam Wiper | 1 |
| 19 | 29629 | Spring, Coil Wedge | 1 |
| 20 | 31311 | Clip, Coil Locking | 1 |

*The complete magneto is not available as an assembly. The magneto number is shown for reference purposes only. Order component parts individually, as shown in parts list.

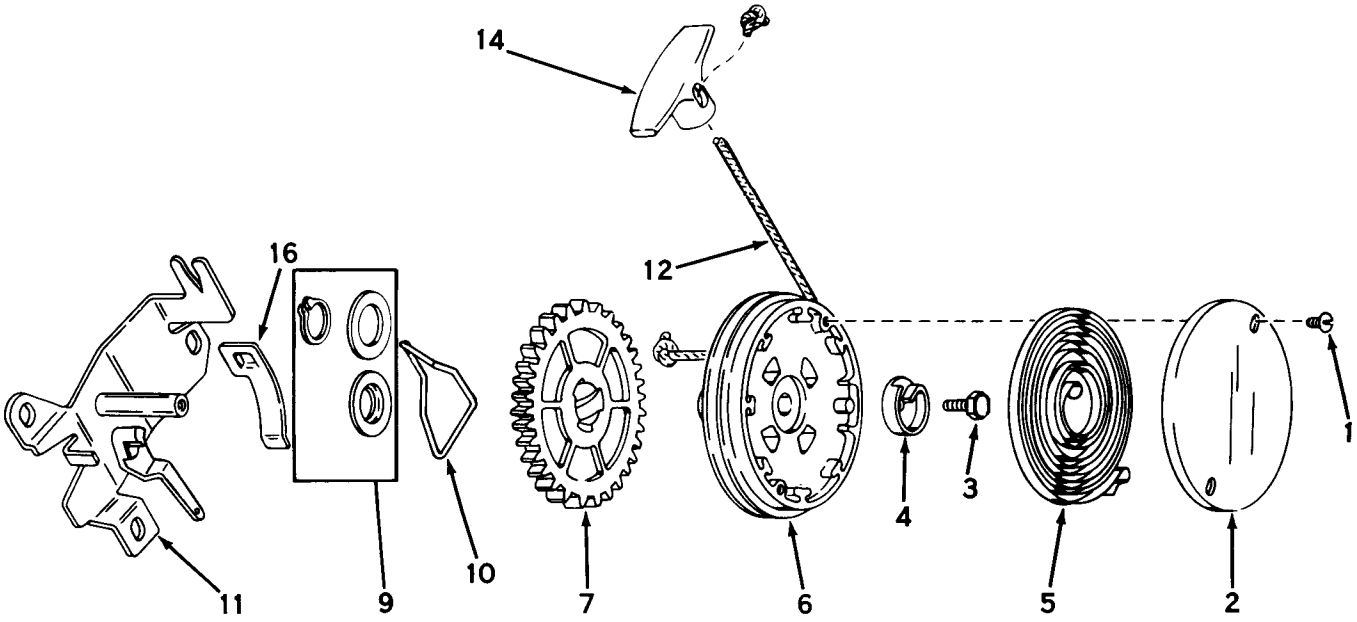


# REWIND STARTER NO. 590519

| Ref. No. | Part No. | Description | No. Used |
|---|---|---|---|
| 1 | 590477 | Screw, Cover | 2 |
| 2 | 590431 | Cover, Spring | 1 |
| 3 | 590472 | Screw, Hex Washer Hd. Taptite Left Hand Thread | 1 |
| 4 | 590432 | Hub, Spring | 1 |
| 5 | 590433 | Spring, Rewind | 1 |
| 6 | 590434A | Pulley Assembly (Incl. Ref. #9) | 1 |
| 7 | 590435B | Gear | 1 |

| Ref. No. | Part No. | Description | No. Used |
|---|---|---|---|
| 9 | 590470 | Kit, Thrust Washer & Snap Ring | 1 |
| 10 | 590438 | Brake | 1 |
| 11 | 590520 | Bracket Assembly, Mounting | 1 |
| 12 | 590451A | Rope, Starter (Length 69" and 5/32" Diameter) | 1 |
| 14 | 590452 | Handle, Starter | 1 |
| 16 | 590446 | Clip, Rope | 1 |

# THE TORO PROMISE

It is Toro's policy to design and produce TORO products to provide our customers with a high level of performance and durability in normal operation. Our products, however, are produced in high volume, and it is inevitable that occasionally a unit will reach a customer with a defect in materials or workmanship which causes the unit to fall below the normal high level of TORO performance. Invariably, such a defect will be noticed in a residential product within one year after purchase. Recognizing this possibility, Toro has established a simple guarantee policy and procedure that is intended to assure customer satisfaction. This guarantee statement is as follows:

## The Toro Promise

*A One Year Limited Warranty*

*The Toro Company promises to repair any TORO Product if defective in materials or workmanship. The following time periods from the date of purchase apply:*

Residential Product . . . . . 1 Year
Residential Products Used Commercially . . . 45 Days

*The costs of parts and labor are included, but the customer pays the transportation costs. Just return any residential product to an Authorized TORO Service Dealer or TORO Distributor.*

Should you feel your TORO is defective and wish to rely on The Toro Promise, the following procedure is recommended:

1. Contact any Authorized TORO Service Dealer, TORO Master Service Dealer, or TORO Distributor (the Yellow Pages of your telephone directory is a good reference source).
2. He will either instruct you to return the product to him or recommend another Authorized TORO Service outlet which might be more convenient.
3. Bring the product along with your original sales slip, or other evidence of purchase date, to the service dealer.
4. The servicing dealer will inspect the unit, advise you whether the product is defective and, if so, make all repairs necessary to correct the defect without extra charge to you.

If for any reason you are dissatisfied with the dealer's analysis of the defect or the service performed, you may contact us.

Write:

TORO Customer Service Department
8111 Lyndale Avenue South
Minneapolis, Minnesota 55420

The above remedy of product defects through repair by an Authorized TORO Service Dealer is the purchaser's sole remedy for any defect.

THERE IS NO OTHER EXPRESS WARRANTY. ALL IMPLIED WARRANTIES OF MERCHANTABILITY AND FITNESS FOR USE ARE LIMITED TO THE DURATION OF THE EXPRESS WARRANTY.

Some states do not allow limitation on how long implied warranty lasts, so the above limitation may not apply to you.

This warranty applies only to parts or components which are defective and does not cover repairs necessary due to normal wear, misuse, accidents, or lack of proper maintenance. Regular, routine maintenance of the unit to keep it in proper operating condition is the responsibility of the owner.

All warranty repairs reimbursable under The Toro Promise must be performed by an Authorized TORO Service Dealer using Toro approved replacement parts.

Repairs or attempted repairs by anyone other than an Authorized TORO Service Account are not reimbursable under The Toro Promise. In addition, these unauthorized repair attempts may result in additional malfunctions, the correction of which is not covered by warranty.

The Toro Company is not liable for indirect, incidental or consequential damages in connection with the use of the product including any cost or expense of providing substitute equipment or service during periods of malfunction or non-use.

Some states do not allow the exclusion of incidental or consequential damages, so the above exclusion may not apply to you.

This warranty gives you specific legal rights, and you may also have other rights which vary from state to state.

Compliance with Radio Interference Regulations Certified.
Certifie Conforme au Reglement sur le Brouillage Radioelectrique.

# PRODUCT CHANGES

In an effort to make improvements available to TORO owners as quickly as possible, minor changes are incorporated into Toro's products from time to time that do not become immediately shown in the Parts Catalog. If such a change apparently has been made in your unit, which is not reflected in your manual, see your TORO Distributor or his Authorized TORO Service Dealer for information and part numbers.

# IDENTIFICATION AND ORDERING

**Model and Serial Numbers**

The Mower has two identification numbers: a model number and a serial number. The two numbers are stamped on a decal which is located on the mower housing between the rear wheels. In any correspondence concerning the mower, supply model and serial numbers to assure that correct information and replacement parts are obtained.

To order replacement parts from an Authorized TORO Service Dealer, supply the following information:

1. Model and serial numbers of the mower.
2. Part number, description, and quantity of part(s) desired.

**NOTE:** Do not order by reference number if a parts catalog is being used; use the PART NUMBER.

***Keep Your TORO All Toro*** Genuine TORO PARTS & ACCESSORIES ***Insist on Genuine Toro Parts***

# MAINTENANCE RECORD

| Date | Hours Used | Oil Change | Air Cleaner Service | Lubrication | Winter Storage | Spring Service | Spark Plug Gap |
|---|---|---|---|---|---|---|---|
| | | | | | | | |
| | | | | | | | |
| | | | | | | | |
| | | | | | | | |
| | | | | | | | |
| | | | | | | | |
| | | | | | | | |
| | | | | | | | |
| | | | | | | | |
| | | | | | | | |
| | | | | | | | |
| | | | | | | | |
| | | | | | | | |
| | | | | | | | |
| | | | | | | | |
| | | | | | | | |

# MAINTENANCE RECORD

| Date | Hours Used | Oil Change | Air Cleaner Service | Lubrication | Winter Storage | Spring Service | Spark Plug Gap |
|---|---|---|---|---|---|---|---|
| | | | | | | | |
| | | | | | | | |
| | | | | | | | |
| | | | | | | | |
| | | | | | | | |
| | | | | | | | |
| | | | | | | | |
| | | | | | | | |
| | | | | | | | |
| | | | | | | | |
| | | | | | | | |
| | | | | | | | |
| | | | | | | | |
| | | | | | | | |
| | | | | | | | |
| | | | | | | | |
| | | | | | | | |
| | | | | | | | |
| | | | | | | | |
| | | | | | | | |
| | | | | | | | |
| | | | | | | | |
| | | | | | | | |
| | | | | | | | |
| | | | | | | | |
| | | | | | | | |
| | | | | | | | |
| | | | | | | | |
| | | | | | | | |
| | | | | | | | |
| | | | | | | | |

Litho in U.S.A.