1978

FORM NO. 3311-216

TORO®

MODEL NO. 18017 – 8000001 & UP

PARTS CATALOG

21" H.P. MULCHER

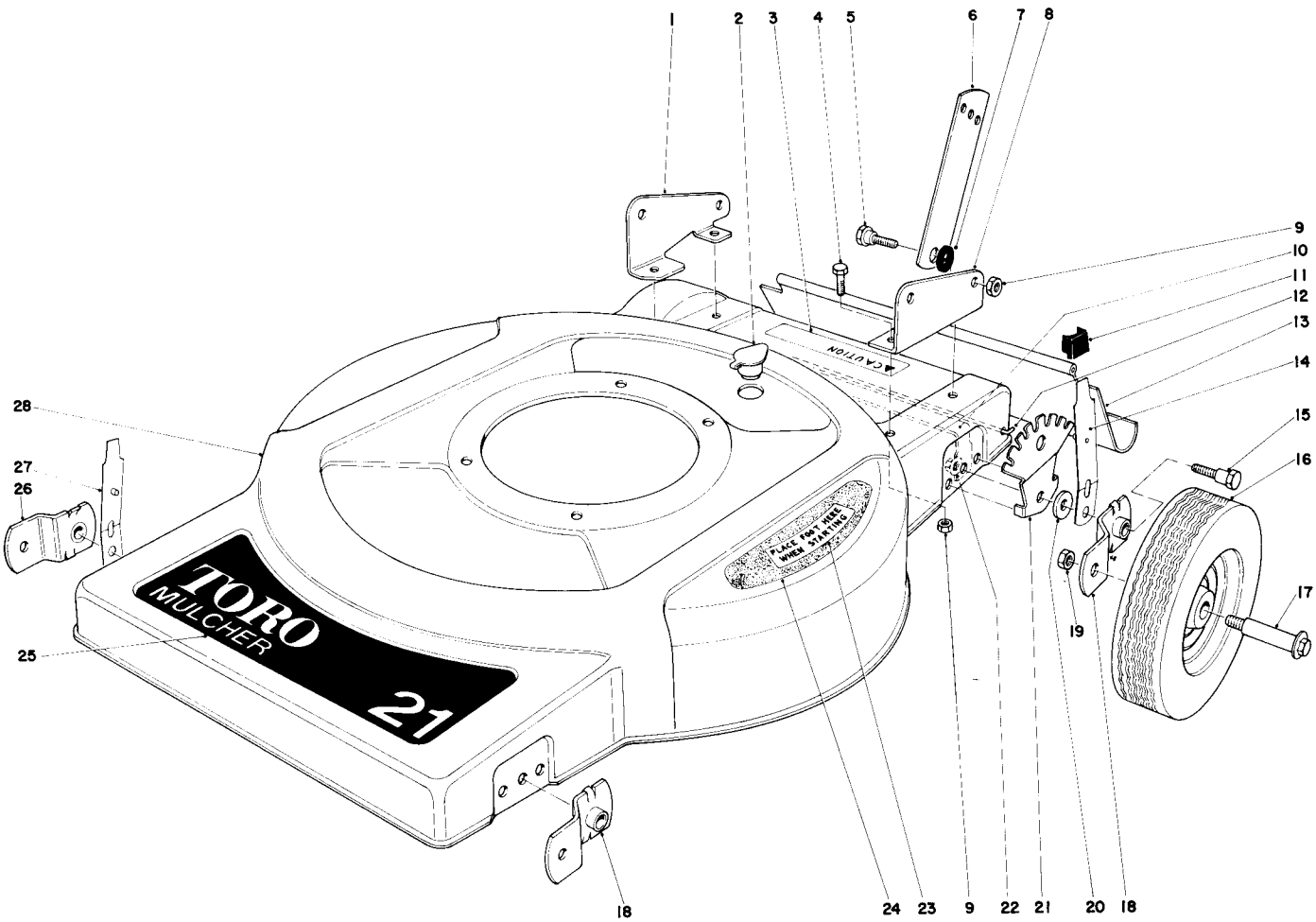

HOUSING ASSEMBLY

Ref. No.	Part No.	Description	No. Used
1	36-6620	Bracket Handle R.H.	1
2	6-4500	Washout Port	1
3	36-6590	Decal – Caution	1
4	322-3	Capscrew	4
5	5-2490	Handle Screw	2
6	36-6630	Handle Latch	2
7	3-3287	Rubber – Spacer	2
8	36-6800	Bracket Handle L.H.	1
9	32152-1	Nut	6
10	36-6830	Support Deck	1
11	25-7740	Knob Arm	4
12	33-3204	Rod Shield	1
13	33-5560	Safety Shield	1
14	27-7240	Spring Arm	2

Ref. No.	Part No.	Description	No. Used
15	36-6670	Pivot Screw	4
16	17-4120	Wheel & Tire Assembly	4
17	3-2652	Wheel Bolt	4
18	24-7710	Pivot Arm Assembly "A"	2
19	32146-6	Nut	4
20	33-0390	Pivot Washer	4
21	36-6780	Quadrant	4
22	32128-30	Nut	4
23	36-2820	Decal – Step Pad	1
24	36-0410	Step Pad	1
25	36-0500	Decal – Front Deck	1
26	23-9120	Pivot Arm Assembly "B"	2
27	25-8000	Spring Arm	2
28	36-6950	Housing	1

COPYRIGHT © ALL RIGHTS RESERVED

The Toro Company – 1978
MINNEAPOLIS, MN 55420 – U.S.A.

Price $1.00

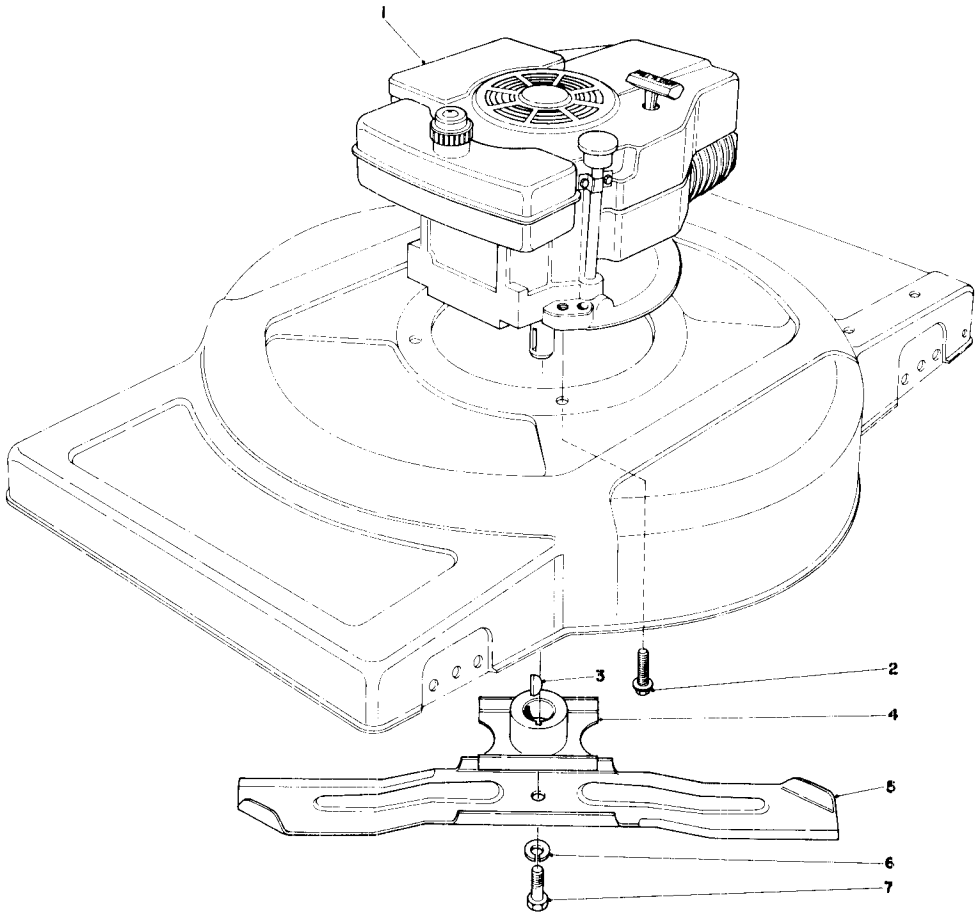

ENGINE ASSEMBLY

Ref. No.	Part No.	Description	No. Used
1	221-592	Engine	1
2	11-0590	Screw	3
3	3257-32	Woodruff Key	1
4	23-0110	Blade Retainer	1

Ref. No.	Part No.	Description	No. Used
5	36-8220	Blade	1
6	3253-22	Lockwasher	1
7	23-0080	Blade Screw	1

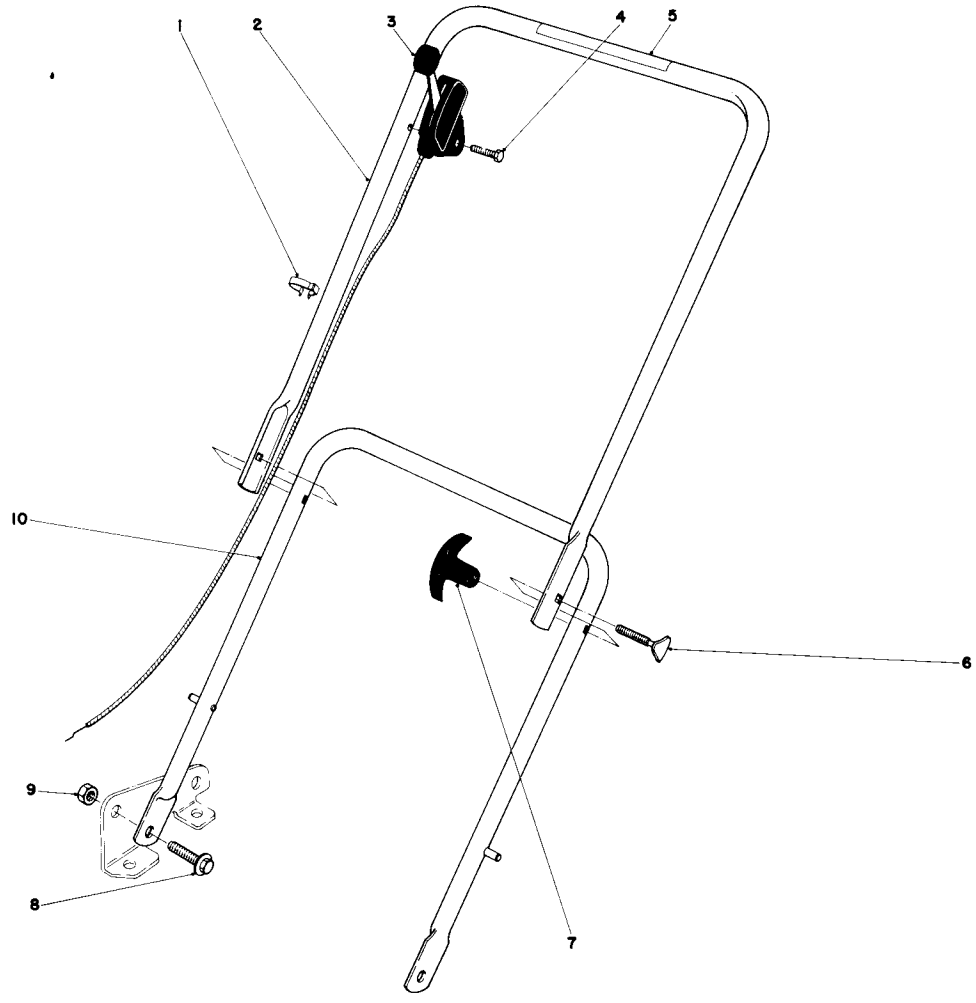

HANDLE ASSEMBLY

Ref. No.	Part No.	Description	No. Used
1	218-465	Clamp	1
2	27-7030	Upper Handle	1
3	33-2531	Throttle Control	1
4	32144-22	Hex Hd. Self Tapping Screw	1
5	36-8310	Decal — Danger	1

Ref. No.	Part No.	Description	No. Used
6	6-6330	Handle Screw	2
7	233-41	Handle Knob	2
8	5-2490	Handle Screw	2
9	32152-1	Nut	2
10	36-6640	Lower Handle	1

ENGINE TECUMSEH MODEL TVS 90-43007

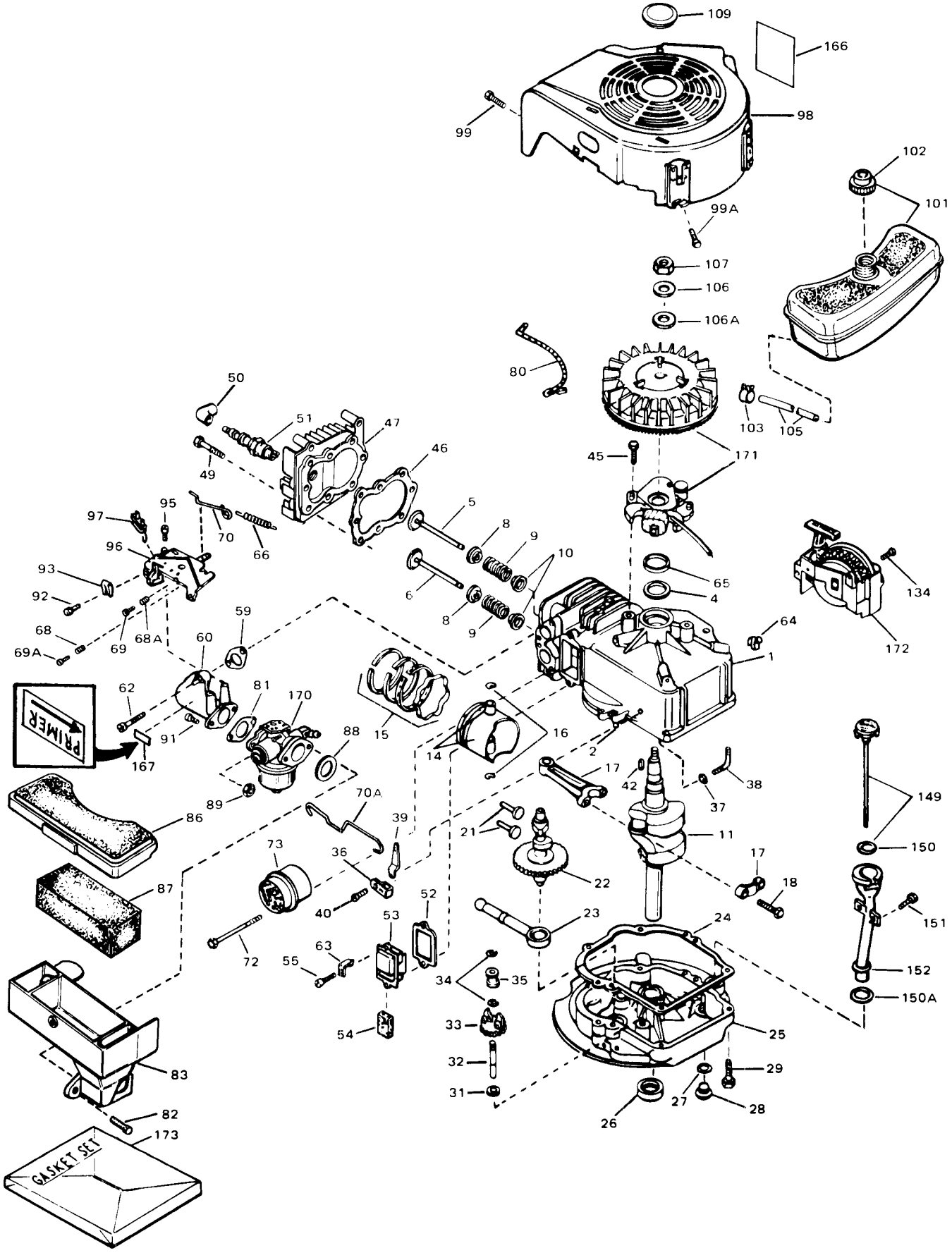

ENGINE TECUMSEH MODEL TVS 90-43007

Ref. No.	Part No.	Description	No. Used
1	32537B	Cylinder Assembly (Incl. Ref. #2 & 4)	1
2	26727	Pin, Dowel	2
4	29183	Seal, Oil	1
5	29314A	Valve, Intake (Std.) (Incl. Ref. #8, 9 & 10)	1
5	29315B	Valve, Intake (1/32" Oversize) (Incl. Ref. # 8, 9 & 10)	1
6	29313B	Valve, Exhaust (Std.) (Incl. Ref. # 8, 9 & 10)	1
6	29315B	Valve, Exhaust (1/32" Oversize) (Incl. Ref. #8, 9, & 10)	1
8	31671	Cap, Upper Valve Spring	2
9	31672	Spring, Valve	2
10	31673	Cap, Lower Valve Spring	2
11	34233A	Crankshaft Assembly	1
14	32538A	Piston, Pin & Ring Assy. (Std.) (Incl. Ref. # 15 & 16)	1
14	32548A	Piston, Pin & Ring Assy. (.010 Oversize) (Incl. Ref. #15& 16)	1
14	32549A	Piston, Pin & Ring Assy. (.020 Oversize) (Incl. Ref.#15&16)	1
15	28986	Ring Set, Piston (Std.)	1
15	28987	Ring Set, Piston (.010 Oversize)	1
15	28988	Ring Set, Piston (.020 Oversize)	1
16	20381	Ring, Piston Pin Retaining	2
17	30963B	Rod Assembly Connecting (Incl. Ref. # 18)	1
18	32610A	Bolt, Connecting Rod	2
21	27241	Lifter, Valve	2
22	33553	Camshaft (Mech. Comp. Release)	1
23	29914	Pump Assembly, Oil	1
24	*26750A	Gasket, Mounting Flange	1
25	30594B	Flange Assy., Mounting (Incl. Ref.#26, 27, 28 & 32)	1
26	26208	Seal, Oil	1
27	*28833	Gasket, Oil Drain Plug	1
28	27244	Plug, Oil Drain	1
29	650488	Screw, Hex Hd. Sems	6
31	30590A	Washer, Flat	1
32	30574	Shaft, Mechanical Governor	1
33	30591	Gear Assy., Gov. (Incl. Ref.#31)	1
34	29193	Ring, Retaining	2
35	30588A	Spool, Governor	1
36	31335	Clamp, Governor Lever	1
37	28277	Washer, Flat	1
38	30589	Rod, Governor (Incl. Ref.#37)	1
39	31383	Lever, Governor	1
40	650648	Screw, Hex Washer Hd.	1
42	610961	Key, Flywheel	1
45	650489	Screw, Hex Hd. Sems	2
46	*29953B	Gasket, Cylinder Head	1
47	34335	Head, Cylinder	1
49	6021A	Screw, Hex Flanged Hd.	8
50	610118	Cover, Spark Plug	1
51	33636	Plug, Spark (Champion J-8 or Equivalent) Except for Canada	1
51	34251 Canada	Resistor Spark Plug (Canadian Regulations Require RJ-17 LM Resistor Spark Plug)	1
52	*31619	Gasket, Breather	1
53	31337	Breather Assembly (Incl. Ref. # 52 & 54)	1

Ref. No.	Part No.	Description	No. Used
54	31410	Element, Breather	1
55	650128	Screw, Fil. Hd. Sems	2
59	*32649	Gasket, Intake Pipe	1
60	31384	Pipe, Intake	1
62	650451	Screw, Hex Hd. Sems	2
63	30593	Clip, Magneto Wire	1
64	27275	Clip, Hi-Tension Wire	1
65	33876	Gasket, Stator	1
66	31361	Spring, Governor	1
68	33802	Spring, Compression	1
68A	31342	Spring, Compression	1
69	650549	Screw, Fil. Hd.	1
69A	650777	Screw, Fil. Hd.	1
70	34337	Link, Governor Spring	1
70A	34336	Link, Throttle	1
72	650795	Screw, Hex Hd.	2
73	27181A	Muffler Kit (Incl. Ref. #72)	1
80	34231	Wire, Ground	1
81	*26756	Gasket, Carburetor	1
82	650806	Screw, Hex Washer Hd. Shoulder	2
83	34339	Body, Air Cleaner	1
86	34341	Cover, Air Cleaner	1
87	34340	Element, Air Cleaner	1
88	*34338	Gasket, Air Cleaner	1
89	29752	Nut & Lockwasher Assembly	2
91	6201	Screw, Hex Hd. Cap	2
92	28942	Screw, Hex Hd. Sems	1
93	27793	Clip, Conduit	1
95	30200	Screw, Hex Washer Hd. Self-Tap Sems	2
96	33131A	Control Assy., Speed (Incl. Ref. #68, 68A, 69, 69A & 97)	1
97	610973	Terminal Assembly	1
98	34345	Housing, Blower	1
99	30200	Screw, Hex Washer Hd. Self-Tap Sems	2
99A	650497	Screw, Pan Flex Hd.	2
101	32170A	Tank Assy., Fuel (Incl. Ref.#102)	1
102	32387A	Cap, Fuel Filler	1
103	26460	Clamp, Fuel Line	1
105	29774	Line, Fuel	1
106	650763	Washer, Belleville	1
106A	650791	Washer, Flat	1
107	650607	Nut, Flywheel	1
109	34113	Plug, Screen	1
134	650802	Screw, Hex Washer Hd. Taptite	2
149	34281	Dipstick, Oil (Incl. Ref. # 150) (Twist Lock)	1
150	33590	"O" Ring	1
150A	34265	Gasket, Oil Tube	1
151	650562	Screw, Hex Washer Hd. Shakeproof	2
152	34264	Tube, Oil Filler (Plastic)	1
166	34346	Decal, Name & Instruction	1
167	34363	Decal, Instruction	1
170	632046	Carburetor (Incl. Ref.# 81)	1
171	610793A	Magneto (The complete magneto is not available as an assembly. The magneto number is shown for reference purposes only. Order component parts individually, as shown in parts list.)	1
172	590531	Starter, Side Mount Rewind	1
173	33238B	Gasket Set (Incl. Items Marked *)	1

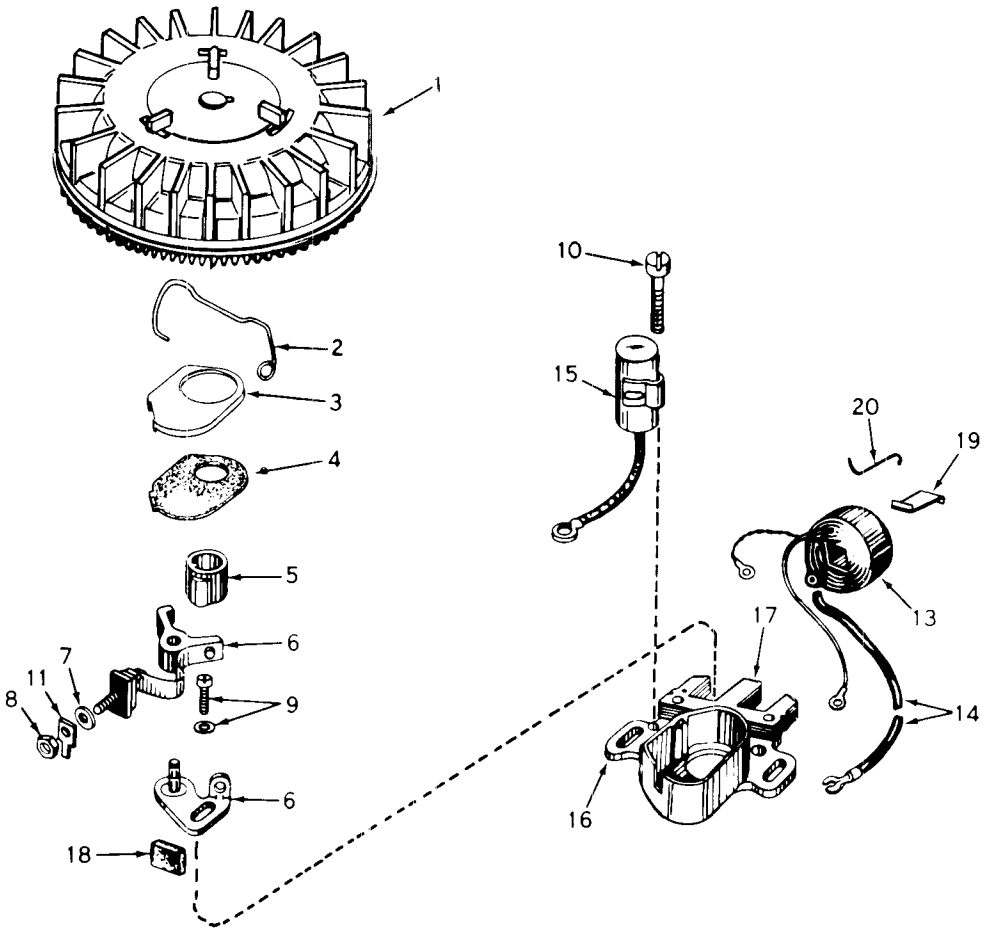

MAGNETO NO. 610793A

Ref. No.	Part No.	Description	No. Used
1	610782A	Flywheel (Incl. Ref. #3 & 4)	1
2	30551	Spring, Breaker Box Dust Cover	1
3	610947	Cover, Breaker Box Dust	1
4	610948	Gasket, Dust Cover	1
5	30552	Cam, Breaker	1
6	30547A	Breaker Assembly	1
7	610385	Washer, Terminal	1
8	610408	Nut, Terminal	1
9	29181	Screw & Washer Assy., Breaker	1
10	610593	Screw, Condenser Fastening	1

Ref. No.	Part No.	Description	No. Used
11	33356	Tab, Ground Terminal	1
13	30560A	Coil Assembly (Incl. Ref.#14)	1
14	30554	Wire, Ignition Lead	1
15	30548A	Condenser	1
16	30545	Core & Plate Group	1
17	30561B	Stator Assy. (Incl. Ref. #2, 3, 4, 6 thru 16, 18, 19 & 20)	1
18	30549	Felt, Cam Wiper	1
19	29629	Spring, Coil Wedge	1
20	31311	Clip, Coil Locking	1

*The complete magneto is not available as an assembly. The magneto number is shown for reference purposes only. Order component parts individually, as shown in parts list.

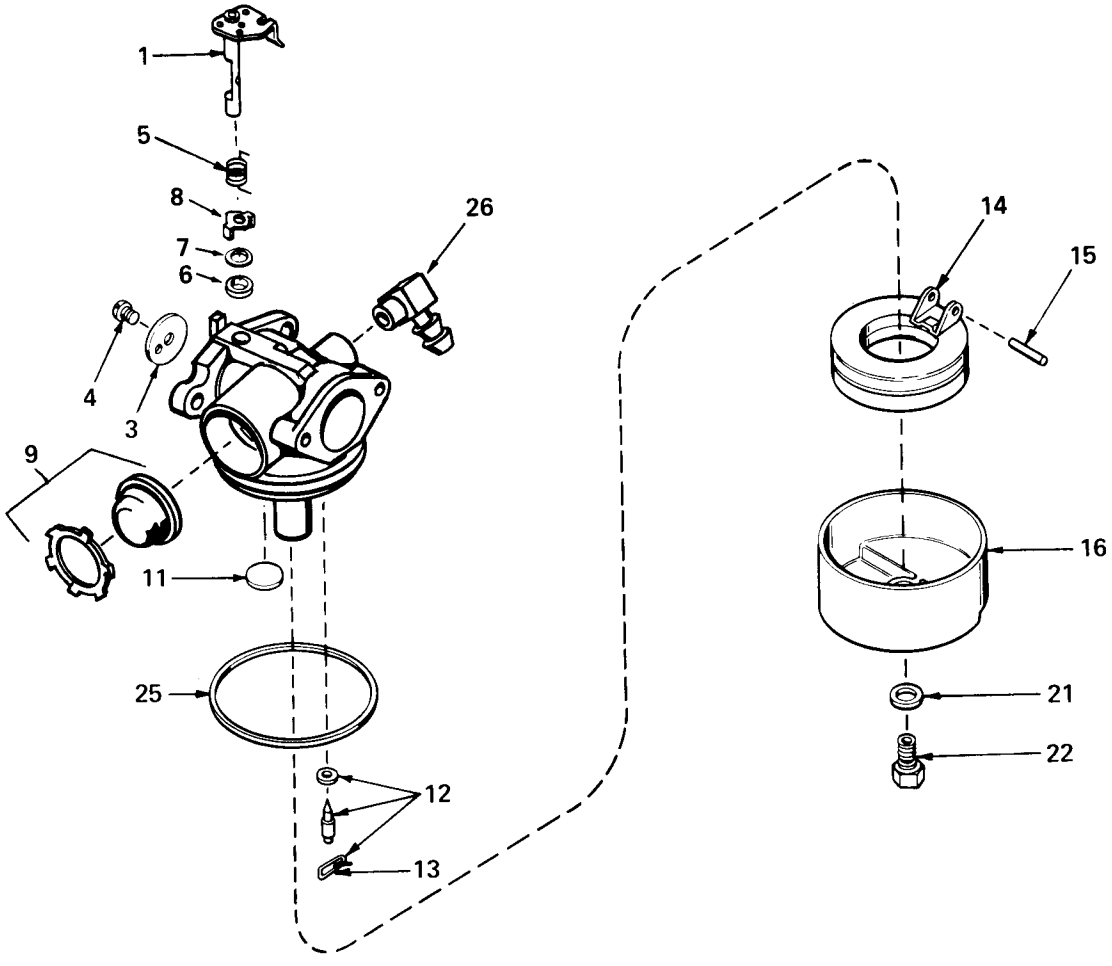

CARBURETOR NO. 632046

Ref. No.	Part No.	Description	No. Used
1	631615	Shaft & Lever Assembly, Throttle	1
3	631616	Shutter, Throttle	1
4	650506	Screw, Throttle Shutter	1
5	632016	Spring, Return	1
6	631971	Seal, Dust	1
7	631184	Washer	1
8	631972	Retainer, Dust Seal	1
9	632047	Bulb & Retainer, Primer	1
11	631027	Plug, Welch	1

Ref. No.	Part No.	Description	No. Used
12	631021	Inlet Needle, Seat & Clip Assembly (Incl. Ref.# 13)	1
13	631022	Clip, Inlet Needle	1
14	632019	Float, Carburetor	1
15	631024	Shaft, Float	1
16	631700	Bowl, Float	1
21	631334	Gasket, Bowl-To-Body	1
22	631962	Nut, Float Bowl	1
25	631028	Gasket, Bowl-To-Body	1
26	631775	Fitting, Fuel Inlet	1

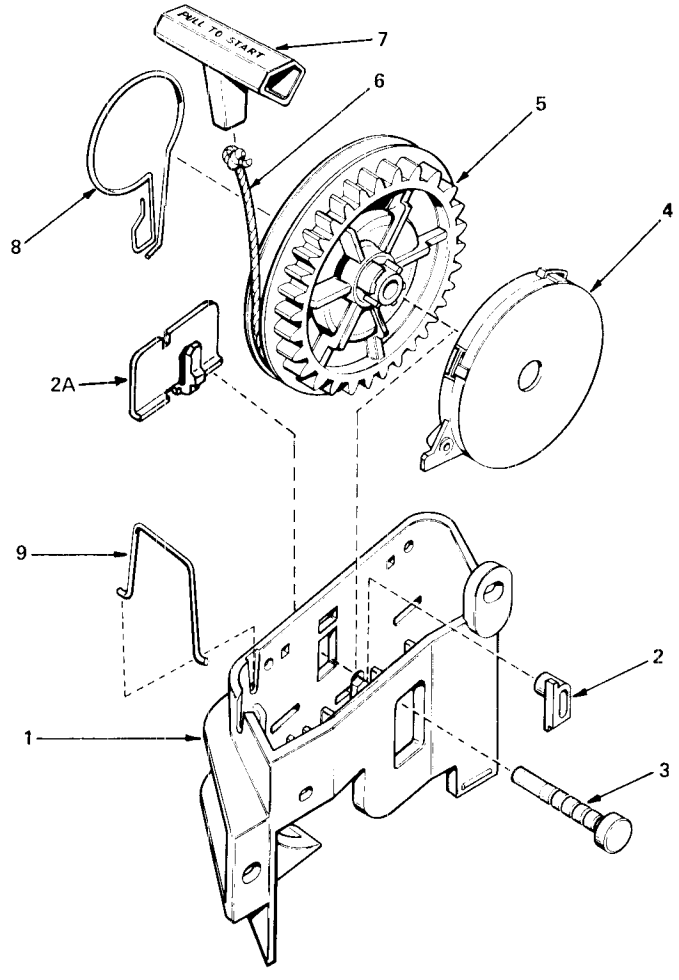

REWIND STARTER NO. 590531

Ref. No.	Part No.	Description	No. Used
1	590523	Bracket, Starter	1
2	590524	Pawl, Locking (Not Used On All Engine Models)	1
2A	590538	Clip, Starter Bracket (Used On Starters Not Equipped W/ Locking Pawl, Ref. #2)	1
3	590525	Pin, Pulley	1
4	590526	Spring Assy., Rewind (Incl. Ref. #3)	1

Ref. No.	Part No.	Description	No. Used
5	590522	Pulley	1
6	590527	Rope, Starter (Length 65" & 9/64" Dia.)	1
7	590452	Handle, Starter	1
8	590528	Brake	1
9	590529	Clip, Rope	1

THE TORO PROMISE

It is Toro's policy to design and produce TORO products to provide our customers with a high level of performance and durability in normal operation. Our products, however, are produced in high volume, and it is inevitable that occasionally a unit will reach a customer with a defect in materials or workmanship which causes the unit to fall below the normal high level of TORO performance. Invariably, such a defect will be noticed in a residential product within one year after purchase. Recognizing this possibility, Toro has established a simple guarantee policy and procedure that is intended to assure customer satisfaction. This guarantee statement is as follows:

The Toro Promise

A One Year Limited Warranty

The Toro Company promises to repair any TORO Product if defective in materials or workmanship. The following time periods from the date of purchase apply:

Residential Product	1 Year
Residential Products Used Commercially . . .	45 Days

The costs of parts and labor are included, but the customer pays the transportation costs. Just return any residential product to an Authorized TORO Service Dealer or TORO Distributor.

Should you feel your TORO is defective and wish to rely on The Toro Promise, the following procedure is recommended:

1. Contact any Authorized TORO Service Dealer, TORO Master Service Dealer, or TORO Distributor (the Yellow Pages of your telephone directory is a good reference source).
2. He will either instruct you to return the product to him or recommend another Authorized TORO Service outlet which might be more convenient.
3. Bring the product along with your original sales slip, or other evidence of purchase date, to the service dealer.
4. The servicing dealer will inspect the unit, advise you whether the product is defective and, if so, make all repairs necessary to correct the defect without extra charge to you.

If for any reason you are dissatisfied with the dealer's analysis of the defect or the service performed, you may contact us.

Write:

TORO Customer Service Department
8111 Lyndale Avenue South
Minneapolis, Minnesota 55420

The above remedy of product defects through repair by an Authorized TORO Service Dealer is the purchaser's sole remedy for any defect.

THERE IS NO OTHER EXPRESS WARRANTY. ALL IMPLIED WARRANTIES OF MERCHANTABILITY AND FITNESS FOR USE ARE LIMITED TO THE DURATION OF THE EXPRESS WARRANTY.

Some states do not allow limitation on how long implied warranty lasts, so the above limitation may not apply to you.

This warranty applies only to parts or components which are defective and does not cover repairs necessary due to normal wear, misuse, accidents, or lack of proper maintenance. Regular, routine maintenance of the unit to keep it in proper operating condition is the responsibility of the owner.

All warranty repairs reimbursable under The Toro Promise must be performed by an Authorized TORO Service Dealer using Toro approvaed replacement parts.

Repairs or attempted repairs by anyone other than an Authorized TORO Service Account are not reimbursable under The Toro Promise. In addition, these unauthorized repair attempts may result in additional malfunctions, the correction of which is not covered by warranty.

The Toro Company is not liable for indirect, incidental or consequential damages in connection with the use of the product including any cost or expense of providing substitute equipment or service during periods of malfunction or non-use.

Some states do not allow the exclusion of incidental or consequential damages, so the above exclusion may not apply to you.

This warranty gives you specific legal rights, and you may also have other rights which vary from state to state.

Compliance with Radio Interference Regulations Certified.
Certifie Conforme au Reglement sur le Brouillage Radioelectrique.

PRODUCT CHANGES

In an effort to make improvements available to TORO owners as quickly as possible, minor changes are incorporated into Toro's products from time to time that do not become immediately shown in the Parts Catalog. If such a change apparently has been made in your unit, which is not reflected in your manual, see your TORO Distributor or his Authorized TORO Service Dealer for information and part numbers.

IDENTIFICATION AND ORDERING

Model and Serial Numbers

The Mower has two identification numbers: a model number and a serial number. The two numbers are stamped on a decal which is located on the mower housing between the rear wheels. In any correspondence concerning the mower, supply model and serial numbers to assure that correct information and replacement parts are obtained.

To order replacement parts from an Authorized TORO Service Dealer, supply the following information.

1. Model and serial numbers of the mower.

2. Part number, description, and quantity of part(s) desired.

NOTE: Do not order by reference number if a parts catalog is being used; use the PART NUMBER.

Keep Your TORO All Toro Genuine TORO PARTS & ACCESSORIES ***Insist on Genuine Toro Parts***

MAINTENANCE RECORD

Date	Hours Used	Oil Change	Air Cleaner Service	Lubrication	Winter Storage	Spring Service	Spark Plug Gap

MAINTENANCE RECORD

Date	Hours Used	Oil Change	Air Cleaner Service	Lubrication	Winter Storage	Spring Service	Spark Plug Gap

MAINTENANCE RECORD

Date	Hours Used	Oil Change	Air Cleaner Service	Lubrication	Winter Storage	Spring Service	Spark Plug Gap