1978

FORM NO. 3311-217

TORO®

MODEL NO. 20698-8000001 & UP

PARTS CATALOG

18" REAR BAGGER

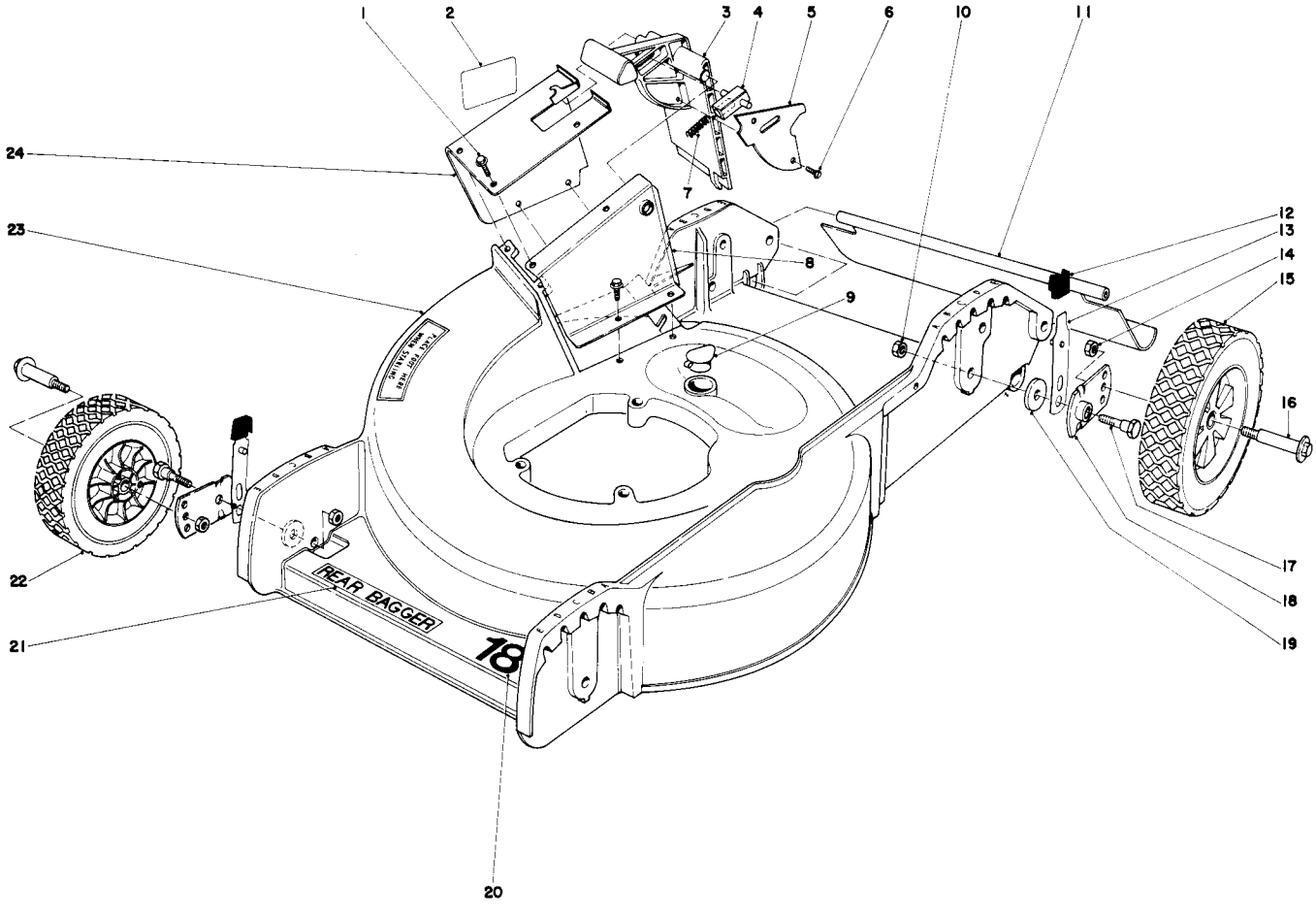

HOUSING ASSEMBLY

Ref. No.	Part No.	Description	No. Used
1	12-3270	Screw Special	7
2	33-0460	Decal Door	1
3	33-0410	Door Mulching	1
4	33-0470	Latch Door	1
5	33-0440	Cover Door	1
6	32144-32	Screw	2
7	33-0450	Spring Latch	1
8	33-0430	Tunnel - Inner	1
9	6-4500	Washout Plug	1
10	32146-5	Nut	4
11	33-2380	Rear Safety Shield	1
12	25-7740	Knob Arm	4

Ref. No.	Part No.	Description	No. Used
13	25-7890	Spring Arm	4
14	32146-6	Nut	4
15	27-6200	Wheel & Tire Assembly	2
16	27-6230	Wheel Bolt	4
17	25-3440	Pivot Screw	4
18	33-0400	Pivot Arm	4
19	33-0390	Pivot Washer	4
20	33-0500	Decal	1
21	33-2320	Decal Rear Bagger	1
22	27-6210	Wheel & Tire Assembly	2
23	29-6620	Housing	1
24	33-0420	Tunnel Outer	1

COPYRIGHT © ALL RIGHTS RESERVED

The Toro Company — 1978
MINNEAPOLIS, MN 55420 — U.S.A.

Price $1.00

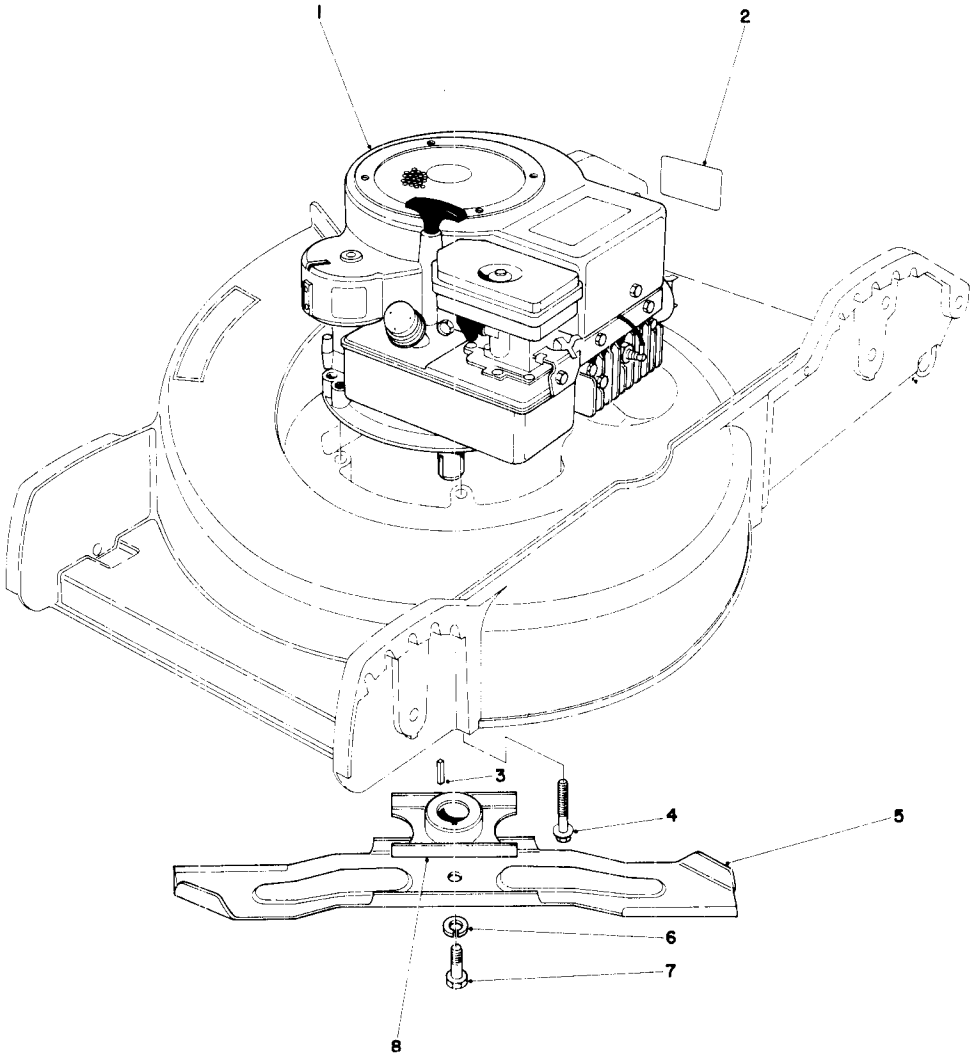

ENGINE ASSEMBLY

Ref. No.	Part No.	Description	No. Used
1	221-580	Engine	1
2	20-2710	Decal - Maintenance	1
3	37-4510	Key - Square	1
4	11-0581	Screw	3

Ref. No.	Part No.	Description	No. Used
5	33-0490	Blade	1
6	3253-22	Lockwasher	1
7	3-5246	Screw Special	1
8	20-2750	Blade Retainer	1

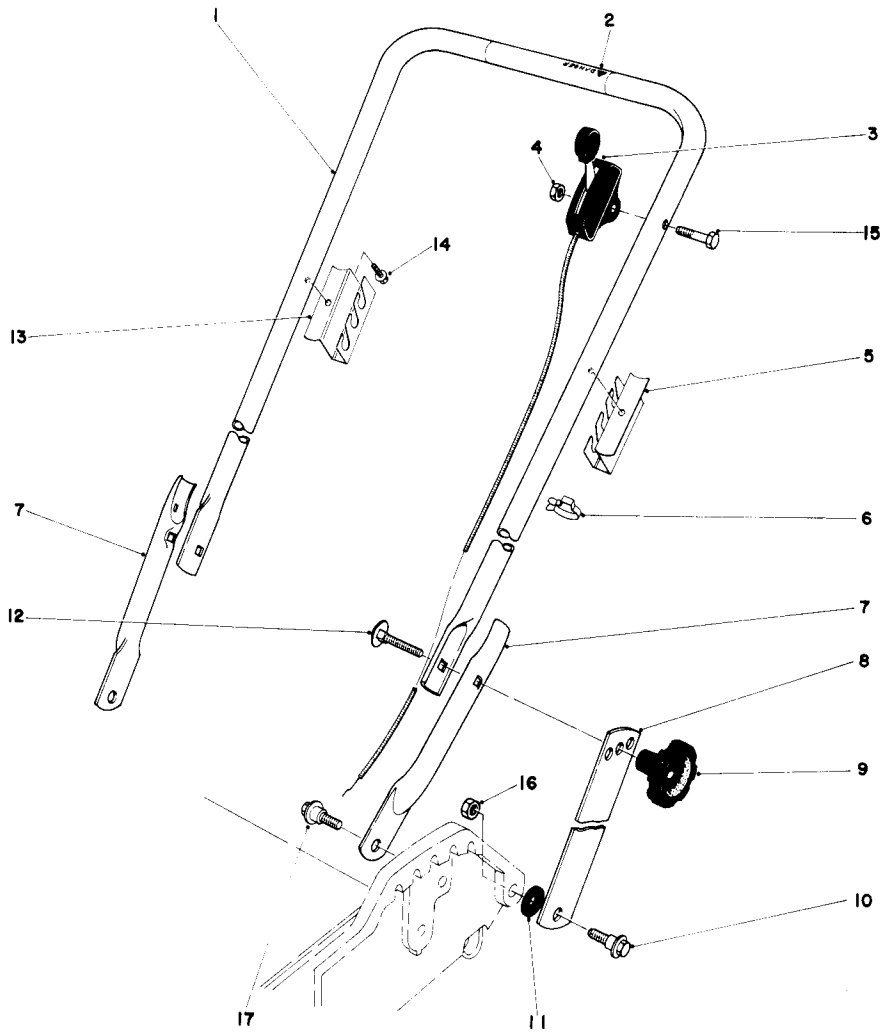

HANDLE ASSEMBLY

Ref. No.	Part No.	Description	No. Used
1	33-0510	Upper Handle	1
2	29-6290	Decal Danger	1
3	33-2531	Throttle Control	1
4	32146-17	Locknut	1
5	36-0730	Support Bag L.H.	1
6	218-465	Clip	1
7	33-0520	Lower Handle	2
8	33-0530	Handle Latch	2
9	19-4050	Knob Handle	2

Ref. No.	Part No.	Description	No. Used
10	27-7210	Shoulder Screw	2
11	3-3287	Spacer Handle Latch	2
12	17-9420	Handle Screw	2
13	36-0740	Support Bag R.H.	1
14	32104-76	Screw	2
15	321-10	Capscrew	1
16	32146-5	Locknut	2
17	5-2490	Shoulder Bolt	2

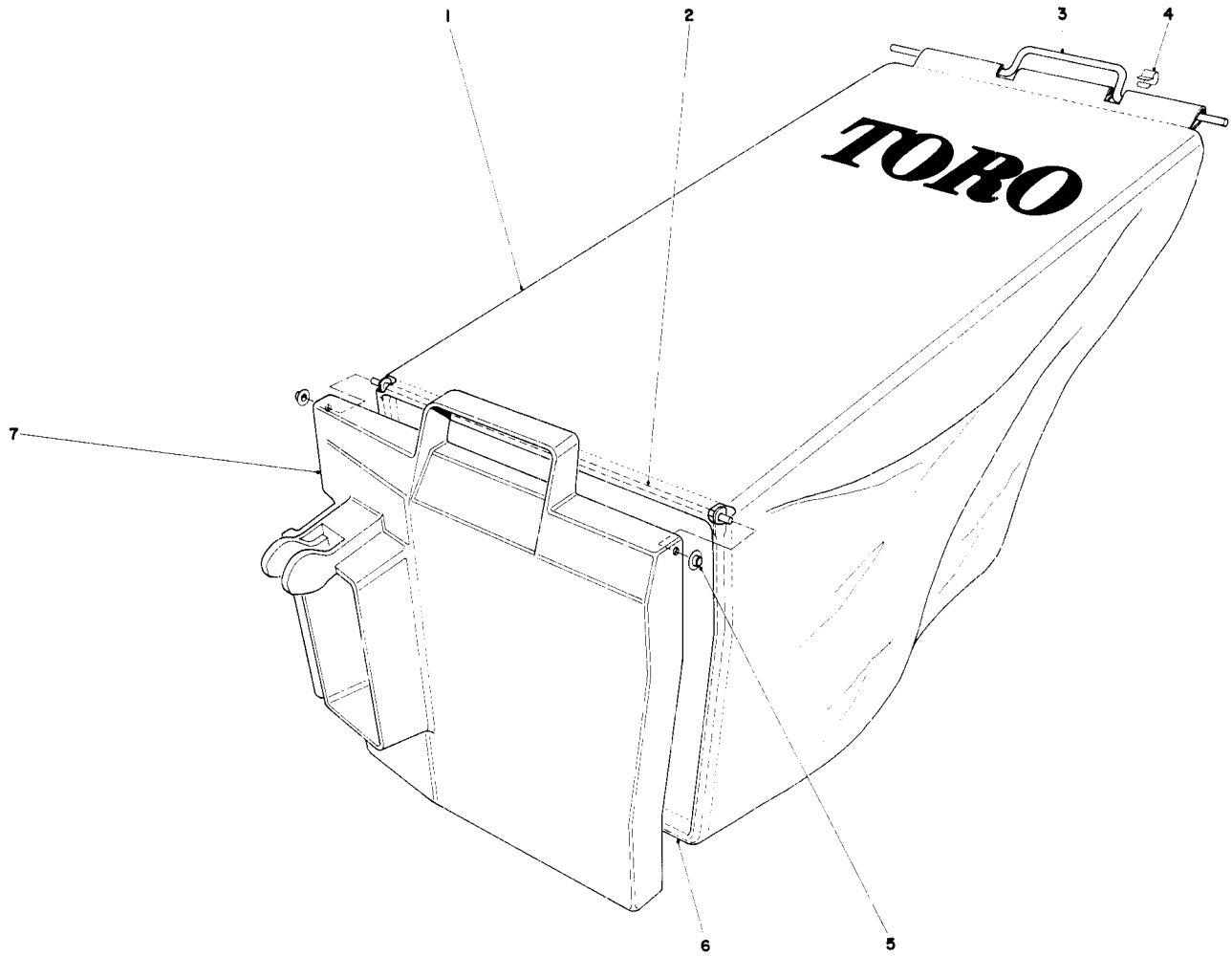

GRASS BAG ASSEMBLY

Ref. No.	Part No.	Description	No. Used
1	33-4550	Bag use 8-0659	1
2	33-2970	Hinge	1
3	33-2390	Handle Bag	1
4	3290-421	Clip Bag Handle	2

Ref. No.	Part No.	Description	No. Used
5	3290-422	Push Nut Washer Cap	2
6	33-2240	Frame Bag	1
7	33-2980	Door-Bag	1

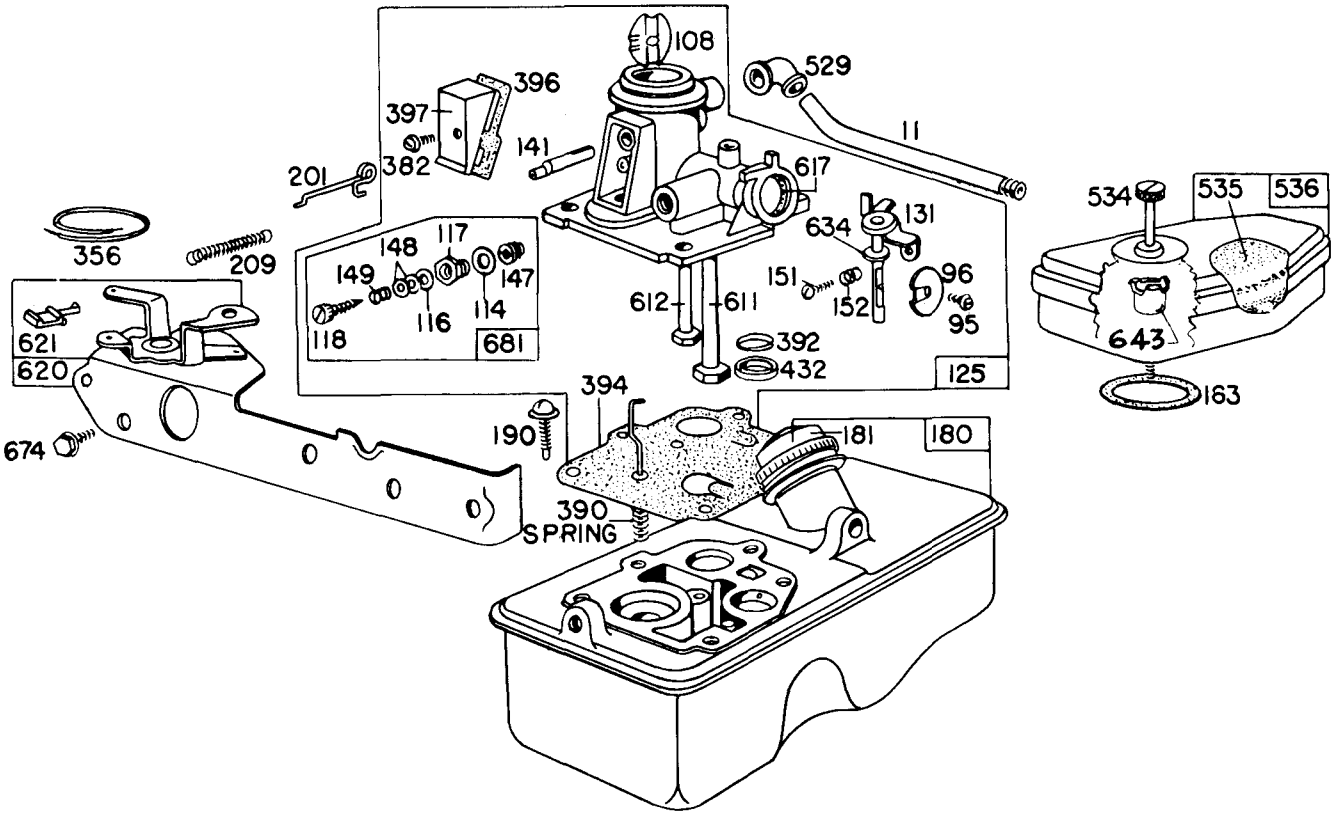

CARBURETOR ASSEMBLY BRIGGS & STRATTON MODEL 92908-1934-01

Ref. No.	Part No.	Description	No. Used
11	230802	Tube—Breather	1
95	93499	Screw—Throttle Valve Mounting Stem	1
96	211237	Valve—Throttle	1
108	298819	Valve—Choke	1
114	66594	Gasket—Needle Valve Nut	1
116	65978	Packing—Needle Valve	1
117	230590	Nut—Needle Valve	1
118	23433	Valve—Needle	1
125	390065	Carburetor Assembly	1
131	299977	Shaft and Lever—Throttle	1
141	68908	Shaft-Choke	1
147	230591	Seat—Needle Valve	1
148	22235	Washer—Needle Valve	2
149	26336	Spring—Needle Valve	1
151	93524	Screw—Rd. Hd.	1
152	260746	Spring—Throttle Adj.	1
163	270816	Gasket—Air Cleaner Mounting	1
180	391694	Tank Assembly—Fuel	1
181	298425	Cap—Fuel Tank	1
190	93440	Screw—Fuel Tank Mtg.	1
201	261027	Link—Governor	1
209	261034	Spring—Governor	1

Ref. No.	Part No.	Description	No. Used
356	298479	Wire—Ground	1
382	93545	Screw—Choke Link Cover	1
390	261015	Spring—Diaphragm	1
392	260455	Spring—Fuel Pump Diaphragm	1
394	391681	Diaphragm—Carburetor	1
396	270571	Gasket—Choke Link Cover	1
397	211678	Cover—Choke Link	1
432	221377	Cap—Spring	1
529	67838	Grommet Breather	1
534	93374	Screw—Air Cleaner	1
535	270579	Element—Air Cleaner	1
536	390055	Cleaner Assembly—Air	1
611	297219	Pipe—Fuel (long)	1
612	296811	Pipe—Fuel (short)	1
617	270344	Seal—Fuel Intake Tube	1
620	299974	Plate—Carburetor Control	1
621	297472	Switch—Stop	1
634	270167	Washer—Throttle Shaft (Felt)	1
643	221321	Cup—Air Cleaner	1
674	93447	Screw—Tank to Bracket	1
681	299060	Needle Valve Kit	1

ENGINE BRIGGS & STRATTON MODEL NO. 92908-1934-01

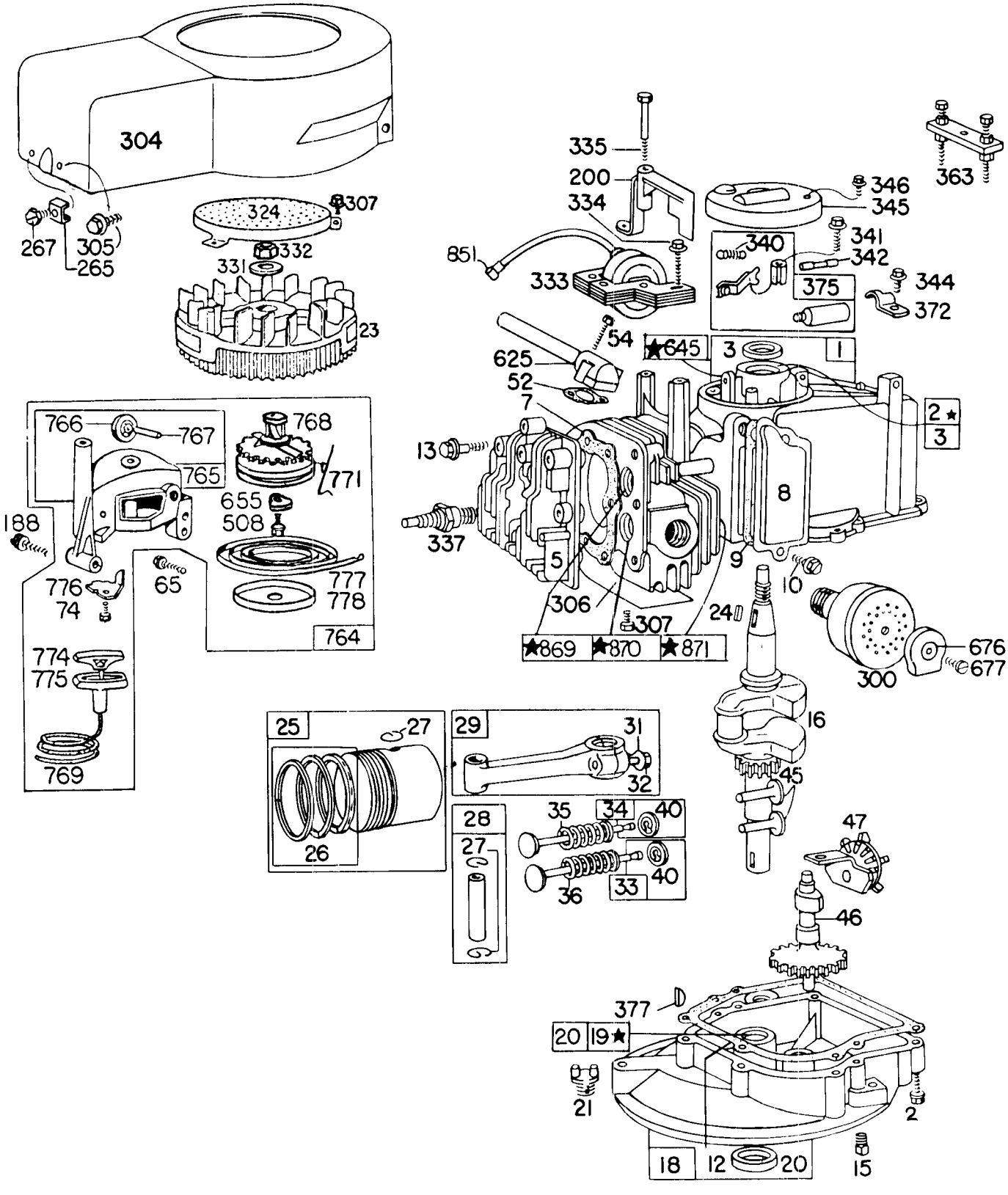

358 GASKET SET

★NOTE-SPECIAL TOOLS REQUIRED FOR INSTALLING
SEE REPAIR INSTRUCTION MANUAL

ENGINE BRIGGS & STRATTON MODEL NO. 92908-1934-01

Ref. No.	Part No.	Description	No. Used
1	298988	Cylinder Assembly	1
2	293708	Bushing—Cylinder	
		Note: Requires special tools for installation.	1
3	89660	Seal—Oil	1
5	211479	Head Cylinder	1
7	*270341	Gasket—Cylinder Head	1
8	298383	Breather—Valve Chamber	1
9	*270239	Gasket—Valve Cover	1
10	93394	Screw—Breather and P.T.O. Gear Sump Cover (Ref. No. 86) Mtg. Sem	1
12	*270833	Gasket—Crankcase—.015" thick (Standard)	1
	*270895	Gasket—Crankcase—.005"thick	1
	*270896	Gasket—Crankcase—.009"thick	1
13	93111	Screw—Cylinder Head (1-15/16" long)	1
	Note:	93772 Stud—Cylinder Head	2
		22963 Washer	2
		Used on type Nos. 1438, 1597, 1602.	1
15	91084	Plug—Oil Drain (Square Head)	1
16	261293	Crankshaft	1
18	390810	Sump—Oil	1
19	293709	Bushing—Oil Sump	
	Note:	Requires Special Tools for Installation	1
20	291841	Seal—Oil	1
21	66768	Plug—Oil Filler	1
22	93032	Screw—Sump Mtg. Sem	1
23	299982	Flywheel—Magneto	1
24	61760	Key—Flywheel	1
25	298904	Piston Assy.—Standard	1
	298905	Piston Assy.—.010" O.S.	1
	298906	Piston Assy.—.020" O.S.	1
	298907	Piston Assy.—.030" O.S.	1
MODEL 92900 SERIES....			
RING SETS:			
	Note:	For Chrome Piston Ring Set—standard size—Order Part No. 299742	
26	298982	Ring Set—Standard Piston	1
	298983	Ring Set, Piston .010" O.S.	1
	298984	Ring Set, Piston .020" O.S.	1
	298985	Ring Set, Piston .030" O.S.	1
27	26026	Lock—Piston Pin	1
28	298909	Pin Assembly—Piston—Standard	1
	298908	Pin Assembly—Piston—.005" O.S.	1
29	294201	Rod Assy.—Connecting	1
	Note:	For Connecting Rod with .020" undersize Crankpin Bore—order No. 296079.	1
31	220756	Lock—Conn. Rod Screw	1
32	92296	Screw—Connecting Rod	1
33	296676	Valve—Exhaust	1
34	296677	Valve—Intake	1
35	260552	Spring—Intake Valve	1
36	26478	Spring—Exhaust Valve	1
40	93312	Retainer—Valve Spring	1
45	230173	Tappet—Valve	1
46	210453	Gear—Cam	1
47	294652	Oil Slinger Gear and Bracket	1
52	*270345	Gasket—Intake Elbow	1
54	93485	Screw—Intake Elbow Mounting	1
65	93587	Screw—Vertical Pull Starter Mounting	1
74	93490	Screw—Sem	1
		*Included in Gasket Set—Part No. 298989.	

Ref. No.	Part No.	Description	No. Used
188	93585	Screw—Fuel Tank and Starter Mounting	1
200	68388	Blade—Governor	1
265	22372	Clamp—Casing	1
267	93469	Screw—Clamp Mtg.	1
300	391435	Muffler—Exhaust	1
304	299983	Housing—Blower	1
305	93559	Screw—Blower Housing Mounting Sem	1
306	221805	Shield—Cylinder	1
307	93490	Screw—Cylinder Shield and Rotating Screen Mounting Sem	1
324	222063	Screen—Rotating	1
331	220865	Washer—Flywheel	1
332	92284	Nut—Flywheel	1
333	298502	Armature—Magneto	1
334	93381	Screw—Armature Mounting Sem	1
335	93435	Screw—Armature and Governor Blade Mounting Sem	1
337	298809	Plug—Spark (with gasket) 1½" high—(37-42 mm.)	1
	Note:	Use Ignition Cable Terminal No. 221798	
340	26018	Spring—Breaker Arm	1
341	93381	Screw—Breaker Arm Mounting Sem	1
342	65704	Plunger—Breaker Point	1
344	93042	Screw—Condenser Clamp Mounting Sem	1
345	220366	Cover—Breaker Point and Condenser	1
346	93014	Screw—Dust Cover Mounting	1
358	298989	Gasket Set	1
363	19069	Puller—Flywheel (Optional Accessory)	1
372	220477	Clamp—Condenser	1
375	294628	Breaker Points and Condenser Set	
	Note:	299061 Ignition Kit Includes: 294628 Point Set 65704 Plunger 61760 Key—Flywheel	1
377	93065	Key—Woodruff No. 6	1
508	93158	Screw—Sem	1
625	298775	Tube—Fuel Intake	1
645	23513	Bushing—Plunger	1
655	222057	Anchor—Spring	1
676	222522	Deflector—Muffler	1
677	93705	Screw—Muffler Deflector	
764	299946	Starter Assembly—Vertical Pull	1
765	299947	Housing—Vertical Pull Starter	1
766	280022	Pulley—Rope (Small)	1
767	231048	Pin—Small Rope Pulley (7/16" Long)	1
768	299948	Pulley and Gear Assembly—Starter	1
769	66734	Rope—Vertical Pull Starter	1
771	299961	Clip—Vertical Pull Starter Starter	1
774	280121	Insert—Starter Handle	1
775	280036	Grip—Starter Rope	1
776	222049	Guide—Rope	1
777	390066	Spring—Vertical Pull Starter	1
778	280021	Cover—Vertical Pull Starter Pulley	1
842	270920	Seal—Oil Filler Cap	1
851	221798	Terminal—Ignition Cable	1
869	210879	Seat—Intake Valve	1
870	211291	Seat—Exhaust Valve	1
871	63709	Guide—Exhaust Valve	1

ENGINE BRIGGS & STRATTON MODEL NO. 92908-1879-01

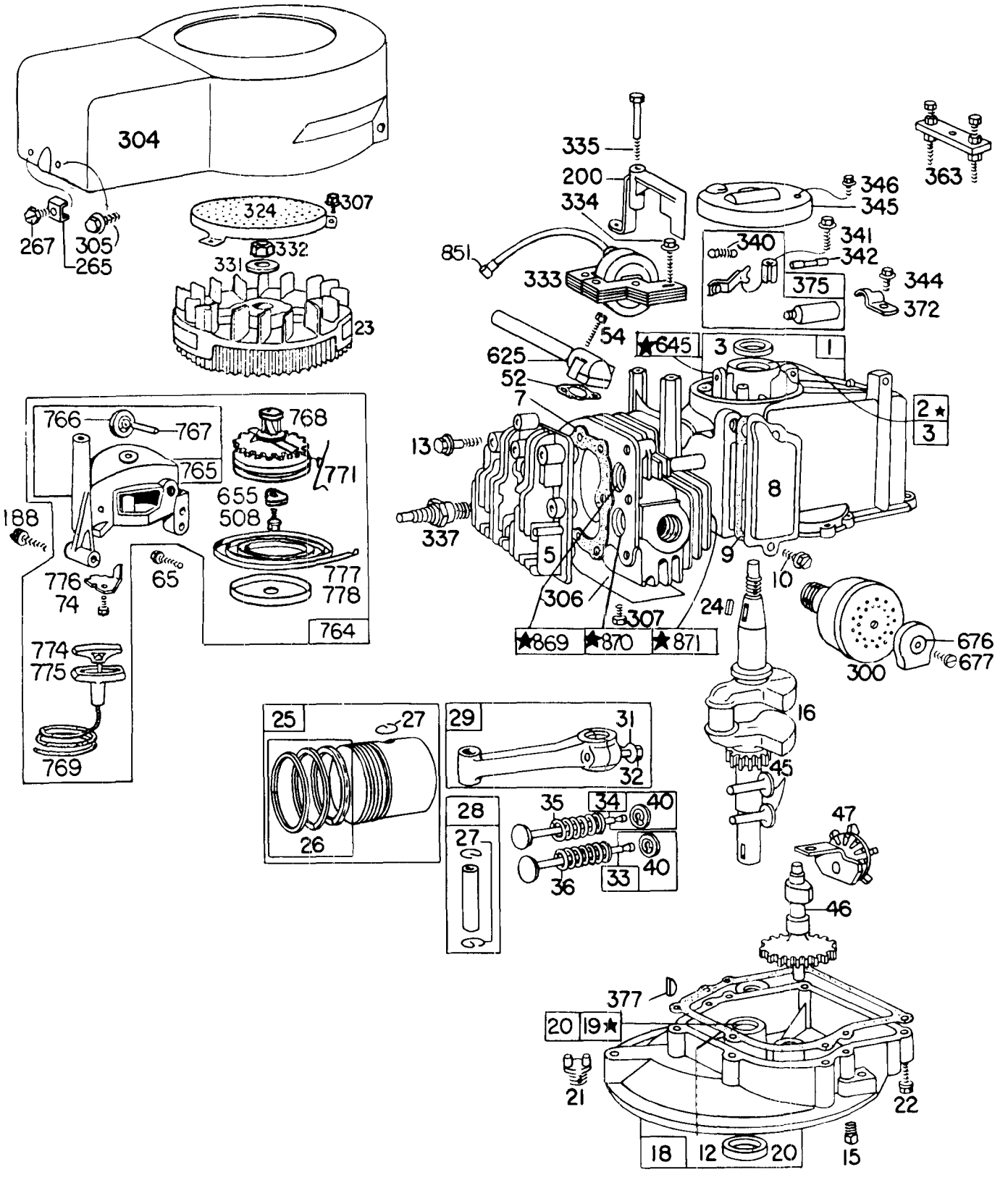

358 GASKET SET

★NOTE-SPECIAL TOOLS REQUIRED FOR INSTALLING
SEE REPAIR INSTRUCTION MANUAL

ENGINE BRIGGS & STRATTON MODEL NO. 92908-1879-01

Ref. No.	Part No.	Description	No. Used
1	298988	Cylinder Assembly	1
2	293708	Bushing—Cylinder	
		Note: Requires special tools	
		for installation.	1
3	89660	Seal—Oil	1
5	211479	Head Cylinder	1
7	*270341	Gasket—Cylinder Head	1
8	298383	Breather—Valve Chamber	1
9	*270239	Gasket—Valve Cover	1
10	93394	Screw—Breather and P.T.O.	
		Gear Sump Cover (Ref.	
		No. 86) Mtg. Sem	1
12	*270833	Gasket—Crankcase—.015"	
		thick (Standard)	1
	*270895	Gasket—Crankcase—.005" thick	1
	*270896	Gasket—Crankcase—.009" thick	1
13	93111	Screw—Cylinder Head	
		(1-15/16" long)	1
	Note:	93772 Stud—Cylinder Head	2
		22963 Washer	2
		Used on type Nos.	
		1438, 1597, 1602.	1
15	91084	Plug—Oil Drain	
		(Square Head)	1
16	261415	Crankshaft	1
18	390810	Sump—Oil	1
19	293709	Bushing—Oil Sump	
	Note:	Requires Special Tools	
		for Installation	1
20	291841	Seal—Oil	1
21	66768	Plug—Oil Filler	1
22	93032	Screw—Sump Mtg. Sem	1
23	299982	Flywheel—Magneto	1
24	61760	Key—Flywheel	1
25	298904	Piston Assy.—Standard	1
	298905	Piston Assy.—.010" O.S.	1
	298906	Piston Assy.—.020" O.S.	1
	298907	Piston Assy.—.030" O.S.	1
MODEL 92900 SERIES....			
RING SETS:			
	Note:	For Chrome Piston Ring	
		Set—standard size—	
		Order Part No. 229742	
26	298982	Ring Set—Standard Piston	1
	298983	Ring Set, Piston .010" O.S.	1
	298984	Ring Set, Piston .020" O.S.	1
	298985	Ring Set, Piston .030" O.S.	1
27	26026	Lock—Piston Pin	1
28	298909	Pin Assembly—Piston—	
		Standard	1
	298908	Pin Assembly—Piston—	
		.005" O.S.	1
29	294201	Rod Assy.—Connecting	1
	Note:	For Connecting Rod with	
		.020" undersize Crankpin	
		Bore—order No. 296079.	1
31	220756	Lock—Conn. Rod Screw	1
32	92296	Screw—Connecting Rod	1
33	296676	Valve—Exhaust	1
34	296677	Valve—Intake	1
35	260552	Spring—Intake Valve	1
36	26478	Spring—Exhaust Valve	1
40	93312	Retainer—Valve Spring	1
45	230173	Tappet—Valve	1
46	210453	Gear—Cam	1
47	294652	Oil Slinger Gear	
		and Bracket	1
52	*270345	Gasket—Intake Elbow	1
54	93485	Screw—Intake Elbow	
		Mounting	1
65	93587	Screw—Vertical Pull	
		Starter Mounting	1
74	93490	Screw—Sem	1
		*Included in Gasket Set—	
		Part No. 298989.	

Ref. No.	Part No.	Description	No. Used
188	93585	Screw—Fuel Tank and	
		Starter Mounting	1
200	68388	Blade—Governor	1
265	22372	Clamp—Casing	1
267	93469	Screw—Clamp Mtg.	1
300	391435	Muffler—Exhaust	1
304	299983	Housing—Blower	1
305	93559	Screw—Blower Housing	
		Mounting Sem	1
306	221805	Shield—Cylinder	1
307	93490	Screw—Cylinder Shield and	
		Rotating Screen Mounting Sem	1
324	222063	Screen—Rotating	1
331	220865	Washer—Flywheel	1
332	92284	Nut—Flywheel	1
333	298502	Armature—Magneto	1
334	93381	Screw—Armature	
		Mounting Sem	1
335	93435	Screw—Armature and	
		Governor Blade	
		Mounting Sem	1
337	298809	Plug—Spark (with gasket)	
		1½" high—(37-42 mm.)	1
	Note:	Use Ignition	
		Cable Terminal	
		No. 221798	
340	26018	Spring—Breaker Arm	1
341	93381	Screw—Breaker Arm	
		Mounting Sem	1
342	65704	Plunger—Breaker Point	1
344	93042	Screw—Condenser Clamp	
		Mounting Sem	1
345	220366	Cover—Breaker Point	
		and Condenser	1
346	93014	Screw—Dust Cover Mounting	1
358	298989	Gasket Set	1
363	19069	Puller—Flywheel	
		(Optional Accessory)	1
372	220477	Clamp—Condenser	1
375	294628	Breaker Points and	
		Condenser Set	
	Note:	299061 Ignition Kit	
		Includes: 294628 Point Set	
		65704 Plunger	
		61760 Key—Flywheel	1
377	93065	Key—Woodruff No. 6	1
508	93158	Screw—Sem	1
625	298775	Tube—Fuel Intake	1
645	23513	Bushing—Plunger	1
655	222057	Anchor—Spring	1
676	222522	Deflector—Muffler	1
677	93705	Screw—Muffler Deflector	
764	299946	Starter Assembly—	
		Vertical Pull	1
765	299947	Housing—Vertical Pull Starter	1
766	280022	Pulley—Rope (Small)	1
767	231048	Pin—Small Rope	1
		Pulley (7/16" Long)	
768	299948	Pulley and Gear	
		Assembly—Starter	1
769	66734	Rope—Vertical Pull	1
		Starter	
771	299961	Clip—Vertical Pull Starter	1
		Starter	
774	280121	Insert—Starter Handle	1
775	280036	Grip—Starter Rope	1
776	222049	Guide—Rope	1
777	390066	Spring—Vertical Pull Starter	1
778	280021	Cover—Vertical Pull	
		Starter Pulley	1
842	270920	Seal—Oil Filler Cap	1
851	221798	Terminal—Ignition Cable	1
869	210879	Seat—Intake Valve	1
870	211291	Seat—Exhaust Valve	1
871	63709	Guide—Exhaust Valve	1

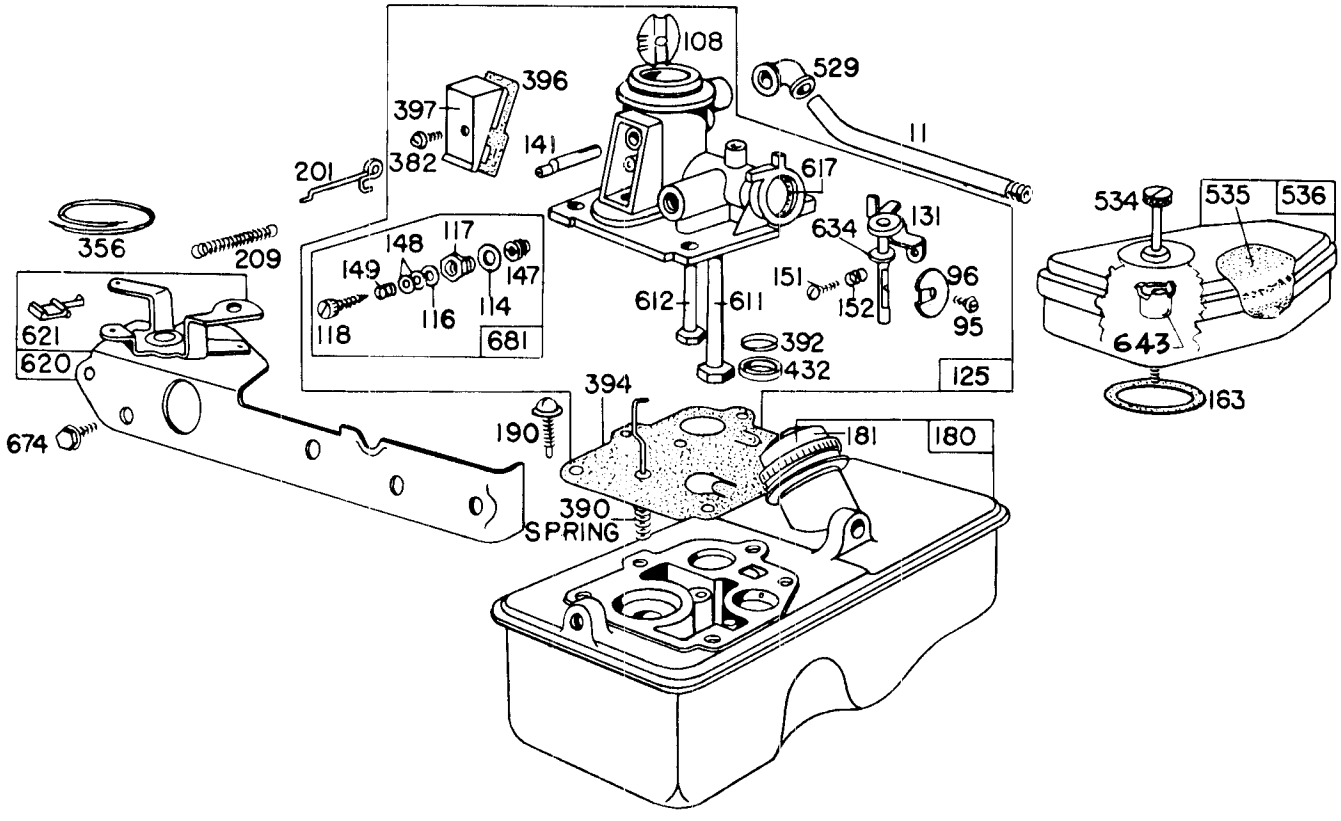

CARBURETOR ASSEMBLY BRIGGS & STRATTON MODEL 92908-1879-01

Ref. No.	Part No.	Description	No. Used
11	230802	Tube—Breather	1
95	93499	Screw—Throttle Valve Mounting Stem	1
96	211237	Valve—Throttle	1
108	298819	Valve—Choke	1
114	66594	Gasket—Needle Valve Nut	1
116	65978	Packing—Needle Valve	1
117	230590	Nut—Needle Valve	1
118	23433	Valve—Needle	1
125	390065	Carburetor Assembly	1
131	299977	Shaft and Lever—Throttle	1
141	68908	Shaft-Choke	1
147	230591	Seat—Needle Valve	1
148	22235	Washer—Needle Valve	2
149	26336	Spring—Needle Valve	1
151	93524	Screw—Rd. Hd.	1
152	260746	Spring—Throttle Adj.	1
163	270816	Gasket—Air Cleaner Mounting	1
180	391694	Tank Assembly—Fuel	1
181	298425	Cap—Fuel Tank	1
190	93440	Screw—Fuel Tank Mtg.	1
201	261027	Link—Governor	1
209	261034	Spring—Governor	1

Ref. No.	Part No.	Description	No. Used
356	298479	Wire—Ground	1
382	93545	Screw—Choke Link Cover	1
390	261015	Spring—Diaphragm	1
392	260455	Spring—Fuel Pump Diaphragm	1
394	391681	Diaphragm—Carburetor	1
396	270571	Gasket—Choke Link Cover	1
397	211678	Cover—Choke Link	1
432	221377	Cap—Spring	1
529	67838	Grommet Breather	1
534	93374	Screw—Air Cleaner	1
535	270579	Element—Air Cleaner	1
536	390055	Cleaner Assembly—Air	1
611	297219	Pipe—Fuel (long)	1
612	296811	Pipe—Fuel (short)	1
617	270344	Seal—Fuel Intake Tube	1
620	299974	Plate—Carburetor Control	1
621	297472	Switch—Stop	1
634	270167	Washer—Throttle Shaft (Felt)	1
643	221321	Cup—Air Cleaner	1
674	93447	Screw—Tank to Bracket	1
681	299060	Needle Valve Kit	1

THE TORO PROMISE

It is Toro's policy to design and produce TORO products to provide our customers with a high level of performance and durability in normal operation. Our products, however, are produced in high volume, and it is inevitable that occasionally a unit will reach a customer with a defect in materials or workmanship which causes the unit to fall below the normal high level of TORO performance. Invariably, such a defect will be noticed in a residential product within one year after purchase. Recognizing this possibility, Toro has established a simple guarantee policy and procedure that is intended to assure customer satisfaction. This guarantee statement is as follows:

The Toro Promise

A One Year Limited Warranty

The Toro Company promises to repair any TORO Product if defective in materials or workmanship. The following time periods from the date of purchase apply:

Residential Product	1 Year
Residential Products Used Commercially . . .	45 Days

The costs of parts and labor are included, but the customer pays the transportation costs. Just return any residential product to an Authorized TORO Service Dealer or TORO Distributor.

Should you feel your TORO is defective and wish to rely on The Toro Promise, the following procedure is recommended:

1. Contact any Authorized TORO Service Dealer, TORO Master Service Dealer, or TORO Distributor (the Yellow Pages of your telephone directory is a good reference source).
2. He will either instruct you to return the product to him or recommend another Authorized TORO Service outlet which might be more convenient.
3. Bring the product along with your original sales slip, or other evidence of purchase date, to the service dealer.
4. The servicing dealer will inspect the unit, advise you whether the product is defective and, if so, make all repairs necessary to correct the defect without extra charge to you.

If for any reason you are dissatisfied with the dealer's analysis of the defect or the service performed, you may contact us.

Write:

TORO Customer Service Department
8111 Lyndale Avenue South
Minneapolis, Minnesota 55420

The above remedy of product defects through repair by an Authorized TORO Service Dealer is the purchaser's sole remedy for any defect.

THERE IS NO OTHER EXPRESS WARRANTY. ALL IMPLIED WARRANTIES OF MERCHANTABILITY AND FITNESS FOR USE ARE LIMITED TO THE DURATION OF THE EXPRESS WARRANTY.

Some states do not allow limitation on how long implied warranty lasts, so the above limitation may not apply to you.

This warranty applies only to parts or components which are defective and does not cover repairs necessary due to normal wear, misuse, accidents, or lack of proper maintenance. Regular, routine maintenance of the unit to keep it in proper operating condition is the responsibility of the owner.

All warranty repairs reimbursable under The Toro Promise must be performed by an Authorized TORO Service Dealer using Toro approved replacement parts.

Repairs or attempted repairs by anyone other than an Authorized TORO Servioe Account are not reimbursable under The Toro Promise. In addition, these unauthorized repair attempts may result in additional malfunctions, the correction of which is not covered by warranty.

The Toro Company is not liable for indirect, incidental or consequential damages in connection with the use of the product including any cost or expense of providing substitute equipment or service during periods of malfunction or non-use.

Some states do not allow the exclusion of incidental or consequential damages, so the above exclusion may not apply to you.

This warranty gives you specific legal rights, and you may also have other rights which vary from state to state.

Compliance with Radio Interference Regulations Certified.
Certifie Conforme au Reglement sur le Brouillage Radioelectrique.

CPI 478

PRODUCT CHANGES

In an effort to make improvements available to TORO owners as quickly as possible, minor changes are incorporated into Toro's products from time to time that do not become immediately shown in the Parts Catalog. If such a change apparently has been made in your unit, which is not reflected in your manual, see your TORO Distributor or his Authorized TORO Service Dealer for information and part numbers.

IDENTIFICATION AND ORDERING

Model and Serial Numbers

The Mower has two identification numbers: a model number and a serial number. The two numbers are stamped on a decal which is located on the mower housing between the rear wheels. In any correspondence concerning the mower, supply model and serial numbers to assure that correct information and replacement parts are obtained.

To order replacment parts from an Authorized TORO Service Dealer, supply the following information.

1. Model and serial numbers of the mower.
2. Part number, description, and quantity of part(s) desired.

NOTE: Do not order by reference number if a parts catalog is being used; use the PART NUMBER.

Keep Your TORO All Toro Genuine TORO PARTS & ACCESSORIES ***Insist on Genuine Toro Parts***

MAINTENANCE RECORD

Date	Hours Used	Oil Change	Air Cleaner Service	Lubrication	Winter Storage	Spring Service	Spark Plug Gap