Form No. 3326-374 Rev A

TORO®

824 XL Power Throw®

Snowthrower

Model No. 38086—220000001 and Up

Operator's Manual

Warning

The engine exhaust from this product contains chemicals known to the State of California to cause cancer, birth defects, or other reproductive harm.

Important This engine is not equipped with a spark arrester muffler. It is a violation of California Public Resource Code Section 4442 to use or operate this engine on any forest–covered, brush–covered or grass–covered land. Other states or federal areas may have similar laws.

This spark ignition system complies with Canadian ICES-002.

Ce système d'allumage par étincelle de véhicule est conforme à la norme NMB-002 du Canada.

The enclosed Engine Owner's Manual is supplied for information regarding The U.S. Environmental Protection Agency (EPA) and the California Emission Control Regulation of emission systems, maintenance and warranty.

Keep this engine Owner's Manual with your unit. Should this engine Owner's Manual become damaged or illegible, replace immediately. Replacements may be ordered through the engine manufacturer.

Contents

	Page
Introduction	2
Safety	3
Safe Operating Practices	3
Toro Snowthrower Safety	4
Safety and Instruction Decals	7
Assembly	8
Loose Parts	8
Installing the Handle Assembly	9
Installing the Speed Selector Rod	10
Installing the Traction Rod	11
Installing the Auger/Impeller Drive Control Linkage	11
Installing the Discharge Chute	12
Installing the Chute Control Gear	12
Installing the Skids	13
Before Starting	14
Filling the Engine Crankcase with Oil	14
Filling the Fuel Tank with Gasoline	14
Checking the Tire Pressure	15
Reviewing the Maintenance Schedule	15
Operation	15
Operating Controls	15
Removing the Carburetor Heater Box	16
Installing the Carburetor Heater Box	17
Starting the Engine	17
Stopping the Engine	18
Freewheeling or Self-propel Drive	18
Snowthrowing Tips	19
Maintenance	20
Recommended Maintenance Schedule	20
Checking the Engine Oil Level	21
Checking the Auger Gearbox Oil Level	21
Adjusting the Skids and the Scraper	21
Adjusting the Speed Selector	22
Adjusting the Traction Drive Belt	22
Replacing the Traction Drive Belt	22
Adjusting the Auger/Impeller Drive Belt	24
Replacing the Auger/Impeller Drive Belt	25
Lubricating the Snowthrower	26
Changing the Engine Oil	26
Replacing the Spark Plug	27
Emptying the Fuel Tank	27
Storage	28
Preparing the Fuel System	28
Preparing the Engine	28
Preparing the Snowthrower	28
Accessories	28
Troubleshooting	29
The Toro Total Coverage Guarantee	32

Introduction

Read this manual carefully to learn how to operate and maintain your product properly. The information in this manual can help you and others avoid injury and product damage. Although Toro designs and produces safe products, you are responsible for operating the product properly and safely.

Whenever you need service, genuine Toro parts, or additional information, contact an Authorized Service Dealer or Toro Customer Service and have the model and serial numbers of your product ready. Figure 1 illustrates the location of the model and serial numbers on the product.

© 2001 by The Toro Company

8111 Lyndale Avenue South
Bloomington, MN 55420-1196

All Rights Reserved

Printed in the USA

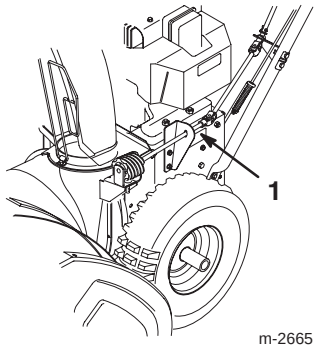

Figure 1

1. Location of the model and serial numbers

Write the product model and serial numbers in the space below:

Model No. _____

Serial No. _____

This manual identifies potential hazards and has special safety messages that help you and others avoid personal injury and even death. ***Danger***, ***Warning***, and ***Caution*** are signal words used to identify the level of hazard. However, regardless of the hazard, be extremely careful.

Danger signals an extreme hazard that *will* cause serious injury or death if you do not follow the recommended precautions.

Warning signals a hazard that *may* cause serious injury or death if you do not follow the recommended precautions.

Caution signals a hazard that may cause minor or moderate injury if you do not follow the recommended precautions.

This manual uses two other words to highlight information. **Important** calls attention to special mechanical information and **Note:** emphasizes general information worthy of special attention.

Safety

This two-stage snowthrower meets or exceeds the B71.3 specifications of the American National Standards Institute in effect at the time of production.

To ensure maximum safety and best performance, and to gain knowledge of the product, it is essential that you and any other operator of the snowthrower read and understand the contents of this manual before the engine is ever started.

⚠ This is the safety alert symbol. It is used to alert you to potential personal injury hazards. Obey all safety messages that follow this symbol to avoid possible injury or death.

Improperly using or maintaining this snowthrower could result in injury or death. To reduce this potential, comply with the following safety instructions.

Safe Operating Practices

The following instructions have been adapted from the ANSI/OPEI B71.3–1995 standard and the ISO 8437:1989 standard. Information or terminology specific to Toro snowthrowers is enclosed in parenthesis.

Training

- Read the operator's manual carefully. Be thoroughly familiar with the controls and the proper use of the equipment. Know how to stop the unit and disengage the controls quickly.
- Never allow children to operate the snowthrower. Never allow adults to operate the snowthrower without proper instruction.
- Keep the area of operation clear of all persons (particularly small children) and pets.
- Exercise caution to avoid slipping or falling, especially when operating the snowthrower in reverse.

Preparation

- Thoroughly inspect the area where you will use the snowthrower. Remove all doormats, sleds, boards, wires, and other foreign objects.
- Before starting the engine, disengage all clutches. For Power Shift® models, shift the snowthrower into neutral as well.
- Do not operate the snowthrower without wearing adequate winter garments. Wear footwear that will improve your footing on slippery surfaces.
- Handle fuel with care; it is highly flammable.
  - Use an approved fuel container.
  - Never add fuel to a running or hot engine.
  - Fill the fuel tank outdoors with extreme care. Never fill the fuel tank indoors.
  - Replace the fuel tank cap securely and wipe up any spilled fuel.
- Use only the power cord supplied with the snowthrower and a receptacle appropriate for use with the power cord for electric-starting motors.

- Adjust the auger housing height to clear gravel or crushed rock surface.
- Never attempt to make any adjustments while the engine is running, except where specifically recommended by Toro.
- Let the engine and the snowthrower adjust to the outdoor temperature before starting to clear snow.
- Operating any powered machine can result in foreign objects being thrown into the eyes. Always wear safety glasses or eye shields while operating, adjusting, or repairing the snowthrower.

Operation

- Do not put hands or feet near or under rotating parts. Keep clear of the discharge opening at all times.
- Exercise extreme caution when operating on or crossing gravel drives, walks, or roads. Stay alert for hidden hazards or traffic.
- After striking a foreign object, stop the engine, remove the wire from the spark plug, thoroughly inspect the snowthrower for any damage, and repair the damage before operating the snowthrower.
- If the unit should start to vibrate abnormally, stop the engine and check immediately for the cause. Vibration is generally a warning of trouble.
- Stop the engine whenever you leave the operating position, before unclogging the auger/impeller housing or discharge chute, and when making any repairs, adjustments, or inspections.
- When cleaning, repairing, or inspecting, make certain that the auger/impeller and all moving parts have stopped. Disconnect the spark-plug wire, and keep the wire away from the spark plug to prevent someone from accidentally starting the engine.
- Do not run the engine indoors, except when starting it and for moving the snowthrower in or out of the building. Open the outside doors; exhaust fumes are dangerous.
- Do not clear snow across the face of slopes. Exercise extreme caution when changing direction on slopes. Do not attempt to clear steep slopes.
- Never operate the snowthrower without proper guards or other safety devices in place.
- Never operate the snowthrower near glass enclosures, automobiles, window wells, and drop-offs without properly adjusting the snow discharge angle. Keep children and pets away.
- Do not overload the machine capacity by attempting to clear snow at too fast a rate.
- Never operate the machine at high transport speeds on slippery surfaces. Look behind and use care when moving in reverse.
- Never direct the discharge at bystanders or allow anyone in front of the unit.
- Disengage the power to the auger/impeller when the snowthrower is being transported or when not in use.
- Use only attachments and accessories approved by Toro, such as wheel weights, counterweights, and cabs. (Contact your Authorized Service Dealer for accessories available for your snowthrower.)
- Never operate the snowthrower without good visibility or light. Always be sure of your footing, and keep a firm hold on the handle. Walk; never run.

Maintenance and Storage

- Check all fasteners at frequent intervals for proper tightness to be sure that the equipment is in safe working condition.
- Never store the machine with fuel in the fuel tank inside a building where ignition sources are present, such as hot water and space heaters and clothes dryers. Allow the engine to cool before storing in any enclosure.
- Always refer to this operator's manual for important details if the snowthrower is to be stored for an extended period.
- Maintain or replace safety and instruction labels when necessary.
- Run the engine run for a few minutes after clearing the snow to prevent the auger/impeller from freezing.

Toro Snowthrower Safety

The following list contains safety information specific to Toro products or other safety information that you must know.

- *Rotating auger/impeller can cut off or injure fingers or hands.* Stay behind the handles and away from the discharge opening while operating the snowthrower. *Keep your face, hands, feet, and any other part of your body or clothing away from moving or rotating parts.*
- Before adjusting, cleaning, repairing, and inspecting the snowthrower, and before unclogging the discharge chute, *stop the engine, remove the key, and wait for all moving parts to stop*. Also, disconnect the wire from the spark plug and keep it away from the spark plug to prevent someone from accidentally starting the engine.
- Use a stick, *not your hands*, to remove obstructions from the discharge chute.
- *Before* leaving the operating position, stop the engine, remove the key, and wait for all moving parts to stop.

- Do not wear loose-fitting clothing that could get caught in moving parts.
- If a shield, safety device, or decal is damaged, illegible, or lost, repair or replace it before beginning operation. Also, tighten any loose fasteners.
- *Do not* smoke while handling gasoline.
- When operating the snowthrower on slopes, use the lower gear. For Power Shift® snowthrowers, use the rear wheel position.
- *Do not* use the snowthrower on a roof.
- Do not touch the engine while it is running or soon after it has stopped because the engine may be hot enough to cause a burn. Do not add oil or check the oil level in the crankcase while the engine is running.
- Perform only those maintenance instructions described in this manual. Before performing any maintenance, service, or adjustment, stop the engine, remove the key and disconnect the wire from the spark plug. Keeping the wire away from the spark plug to prevent someone from accidentally starting the engine. If major repairs are ever needed, contact your Authorized Service Dealer.
- Do not change the governor settings on the engine.
- When storing the snowthrower for more than 30 days, drain the fuel from the fuel tank to prevent a potential hazard. Store fuel in an approved fuel container. Remove the key from the ignition switch before storing the snowthrower.
- To ensure the best performance and safety, purchase only genuine Toro replacement parts and accessories.

Before Operating

Read and understand the contents of this manual before operating the snowthrower. Become familiar with all controls and know how to stop the engine quickly.

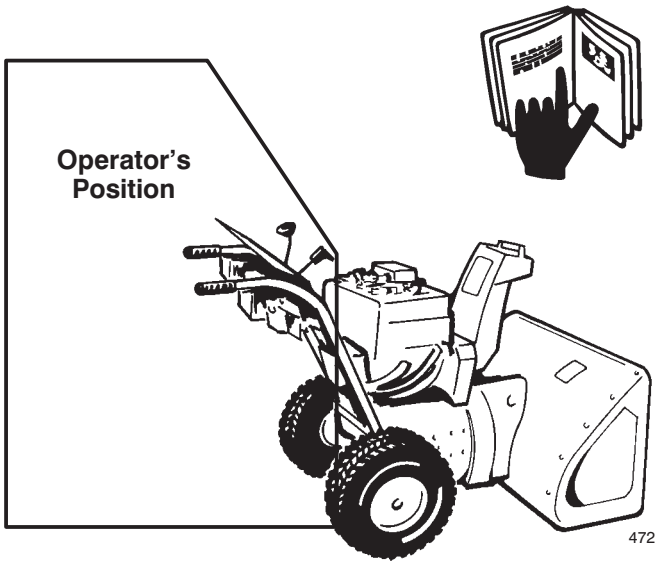

Caution: Improper use may result in loss of fingers, hands, or feet.

There is a high-speed impeller within two inches of the opening.

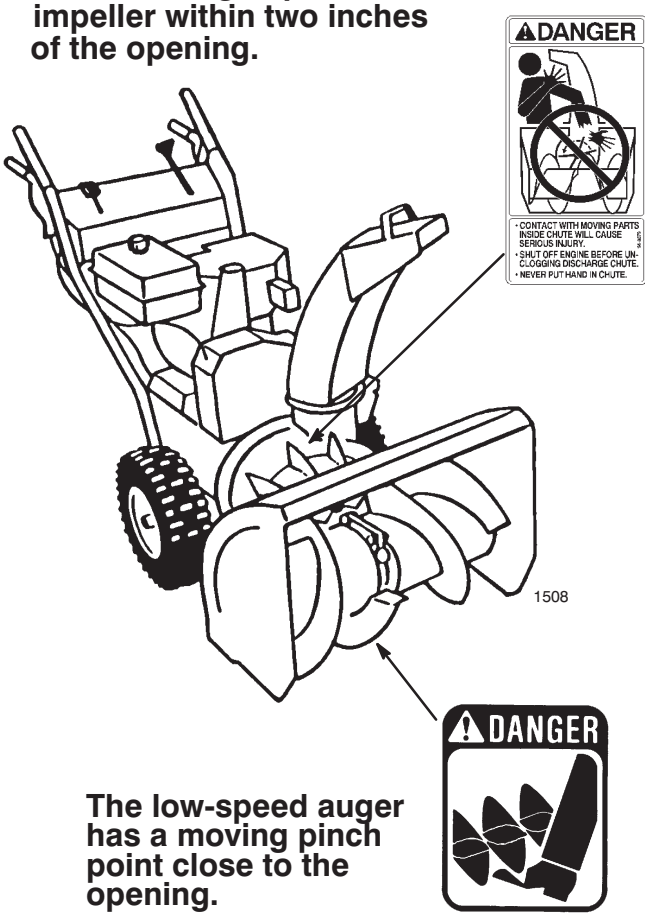

The low-speed auger has a moving pinch point close to the opening.

Safety and Instruction Decals

Safety decals and instructions are easily visible to the operator and are located near any area of potential danger. Replace any decal that is damaged or lost.



53-7670

1. Cutting/dismemberment hazard in auger



94-8079

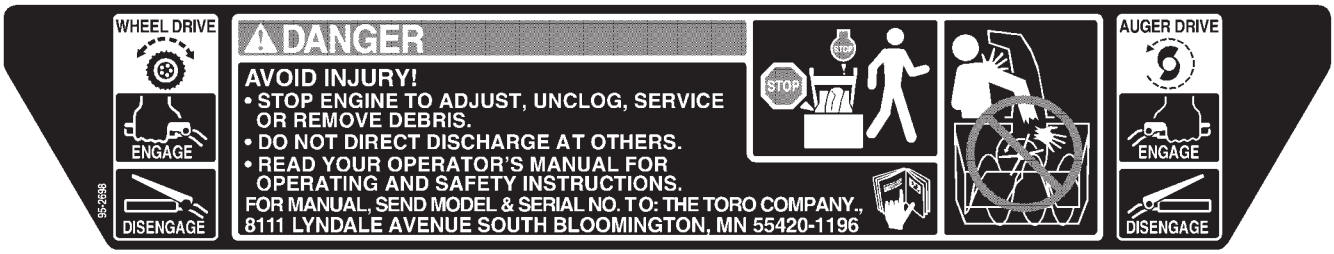

99-5953



100–3340

1. Forward drive speed settings
2. Speed selector
3. Reverse drive speed settings

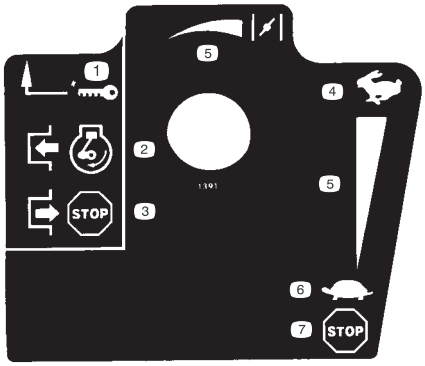

Tecumseh Part No. 35077

1. Key ignition
2. Engage to start the engine
3. Disengage to stop the engine
4. Fast
5. Increasing scale
6. Slow
7. Stop the engine



Tecumseh Part No. 36501

1. Primer



Tecumseh Part No. 37119

1. Warning—hot surface; do not touch

Assembly

Note: Determine the left and right sides of the machine from the normal operating position.

Loose Parts

DESCRIPTION	QTY.	USE
Handle assembly	1	Installing the handle assembly
Bolts	4	
Curved washers	4	
Speed selector rod	1	Installing the speed selector rod
Cotter pin	1	
Flat washer	1	
Spring	1	Installing the traction rod
Flange locknut	1	
Lower link	1	Installing the auger/impeller drive control linkage
Flange nut	1	
Flange locknut	1	
Discharge chute	1	Installing the discharge chute
Chute retainers	3	
Chute retainer plates	3	
Screws	3	
Locknuts	3	
Worm gear	1	Installing the chute control gear
Bracket	1	
Carriage bolt	1	
Flat washer	1	
Locknut	1	

DESCRIPTION	QTY.	USE
Skids	2	
Flange-head bolts—3/4 in. (1.9 cm)	2	Installing the skids
Flat washers and locknuts	2	
Ignition key	1	Starting and stopping the engine

Installing the Handle Assembly

1. Remove the tie straps that secure the control rods to the handle assembly.

2. Remove the axle pins from both wheels (Fig. 2) and slide the wheels outward on the axle approximately one inch (2.5 centimeters).

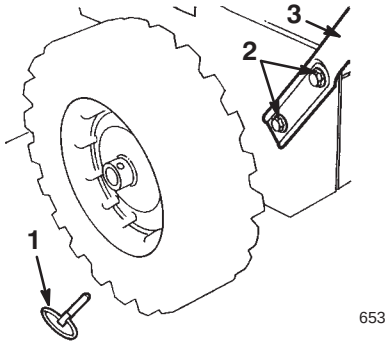

Figure 2

1. Axle pin (2)
2. Bolts and curved washers (4)
3. Handle assembly

3. Hold the left side of the handle assembly in the installation position and insert the upper traction rod through the loop in the lower traction rod (Fig. 3).

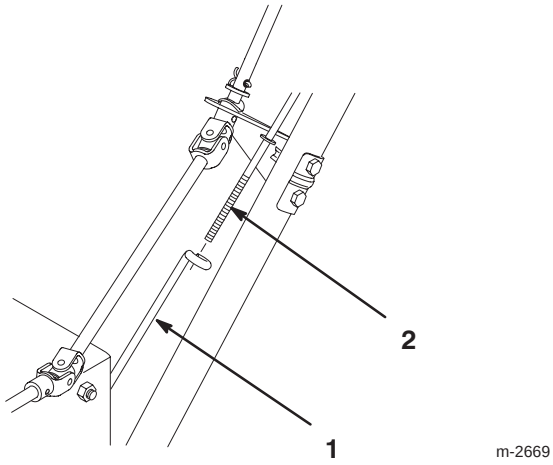

Figure 3

1. Lower traction rod
2. Upper traction rod

Important Ensure that the chute control rod assembly is between the engine and the traction rod (Fig. 4).

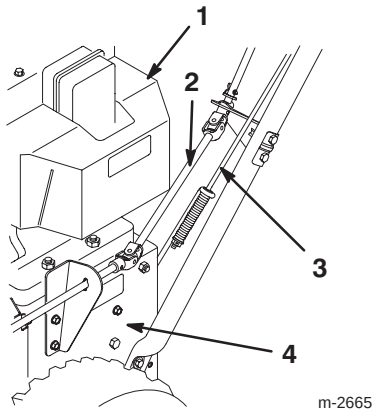

Figure 4

1. Engine
2. Chute control rod
3. Traction rod
4. Side plate

4. Position the left side of the handle assembly against the left side of the snowthrower, align the handle mount holes with the holes in the side plate, and secure the left side of the handle assembly with two bolts and curved washers until they are finger tight (Fig. 2).

Note: The concave side of the curved washer goes against the outside of the handle.

5. Position the right side of the handle assembly against the right side of the snowthrower, align the handle mount holes with the holes in the side plate, and secure the right side of the handle assembly with two bolts and curved washers until they are finger tight.

6. Ensure that both sides of the handle assembly are in line with each other and then torque the bolts that hold the handle assembly to 200 in-lb (2250 N·cm). If you do not have a torque wrench, tighten the bolts firmly.

7. Slide the wheels inward and insert each axle pin through the hole in each wheel hub and through the *inner* hole of the axle (Fig. 5).

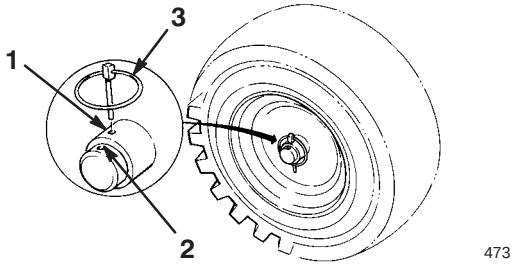

Figure 5

1. Inner axle hole and wheel hub
2. Outer axle hole
3. Axle pin

Note: To use tire chains (optional), install the axle pins through the *outer* axle holes.

Installing the Speed Selector Rod

1. Pull the speed selector arm (Fig. 6) to the most outward position.

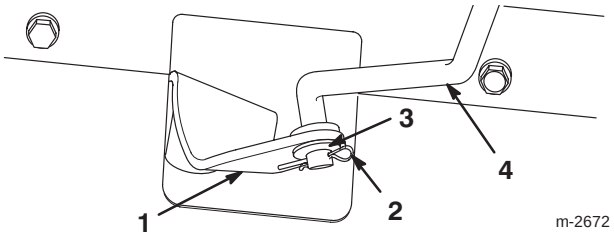

Figure 6

1. Speed selector arm
2. Cotter pin
3. Flat washer
4. Speed selector rod

2. Move the speed selector (Fig. 7) on the control panel to the R_2 (*Reverse*) position.

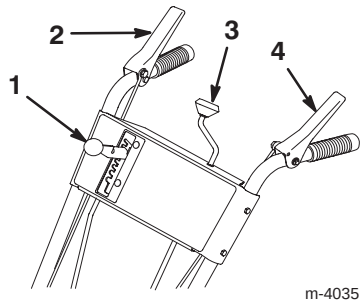

Figure 7

1. Speed selector
2. Auger/impeller drive control lever
3. Discharge chute control
4. Traction control lever

3. Rotate the speed selector rod in the trunnion (Fig. 8) until the bottom end of the rod can slip into the hole in the speed selector arm (Fig. 6).

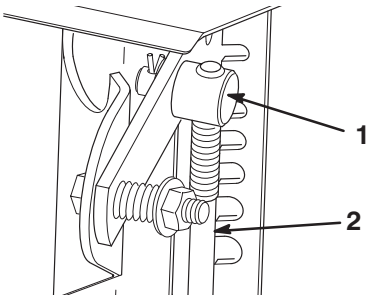

Figure 8

1. Trunnion
2. Speed selector rod

4. Install the speed selector rod into the selector arm, add one flat washer on the rod, and secure it with a cotter pin (Fig. 6).

Note: If the speed selector does not move into fifth gear or does not meet your speed requirements, adjust the speed selector. Refer to Adjusting the Speed Selector on page 22.

Installing the Traction Rod

1. Slide the spring over the bottom of the upper traction rod (Fig. 9).

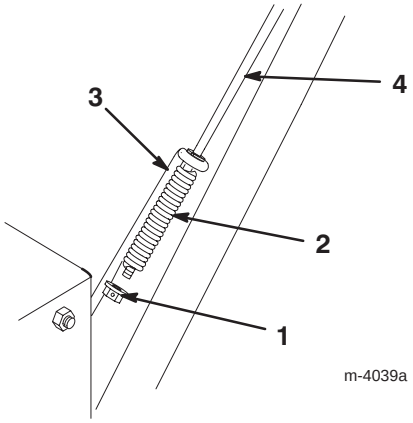

Figure 9

1. Flange locknut
2. Spring
3. Lower traction rod
4. Upper traction rod

2. Thread a flange locknut (flange side up) onto the bottom of the upper traction rod below the spring (Fig. 9).
3. Adjust the flange locknut up or down on the upper traction rod until the distance between the top of the handgrip and the bottom of the traction control lever is approximately five inches (12.7 centimeters) as shown in Figure 10.

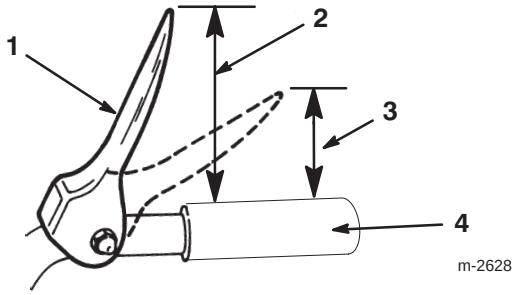

Figure 10

1. Traction control lever
2. Approximately five inches (12.7 centimeters)
3. Three to four inches (7.6 to 10.2 centimeters)
4. Handgrip

4. Move the speed selector (Fig. 19) into fifth gear.
5. Slowly pull the snowthrower backward while slowly pressing the traction control lever toward the handgrip.

   Note: The adjustment is correct when the wheels stop rolling backward and the distance between the top of the handgrip and the bottom of the traction control lever is three to four inches (7.6 to 10.2 centimeters) as shown in Figure 10.
6. Adjust the flange locknut, if necessary, to obtain the proper distance between the top of the handgrip and the bottom of the traction control lever.

Installing the Auger/Impeller Drive Control Linkage

1. Thread a flange nut (flange side down) onto the upper control rod located on the right side of the handle assembly (Fig. 11).

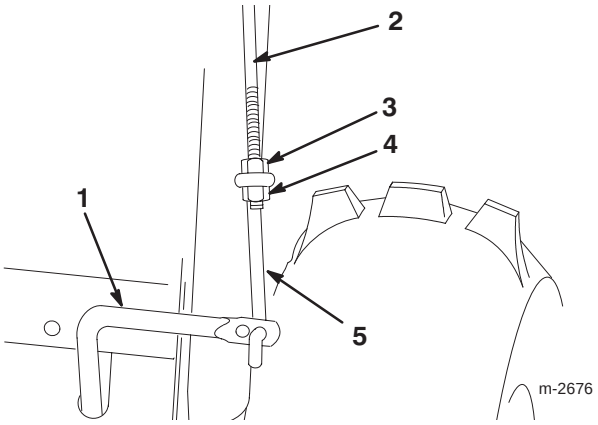

Figure 11

1. Lower control rod
2. Upper control rod
3. Flange nut
4. Flange locknut
5. Lower link

---

2. Install the lower link through the outer hole in the lower control rod as shown in Figure 11.

3. Insert the upper control rod through the loop in the lower link (Fig. 11).

4. Thread a flange locknut (flange side up) onto the bottom of the upper control rod below the loop in the lower link (Fig. 11).

5. Check the distance between the top of the handgrip and the bottom of the auger/impeller drive control lever. The distance should be approximately four inches (10.2 centimeters) as shown in Figure 12.

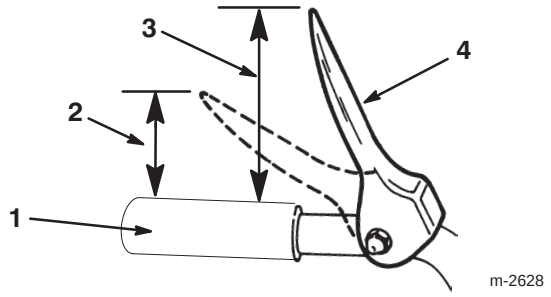

Figure 12

1. Handgrip
2. Two inches (five centimeters)
3. Approximately four inches (10.2 centimeters)
4. Auger/impeller drive control lever

---

6. Press the auger/impeller drive control lever slowly toward the handgrip.

Note: The amount of force needed to compress the lever increases noticeably when you remove the slack from the auger/impeller drive belt (approximately one-half of the lever movement). The adjustment is correct when the force *begins* to increase and the distance between the top of the handgrip and the bottom of the auger/impeller drive control lever is two inches (five centimeters) as shown in Figure 12.

Note: If the force does not noticeably increase, remove the belt cover (refer to steps 1 and 2 of Replacing the Auger/Impeller Drive Belt on page 25) and measure two inches (five centimeters) above the handgrip at the point where you remove the slack from the auger/impeller drive belt.

7. Adjust the flange nut and the flange locknut (Fig. 11), if necessary, to obtain the proper dimension between the top of the handgrip and the bottom of the auger/impeller drive control lever.

8. Tighten the nuts securely.

Installing the Discharge Chute

1. Apply a light coat of low-temperature grease to the chute ring (Fig. 13).

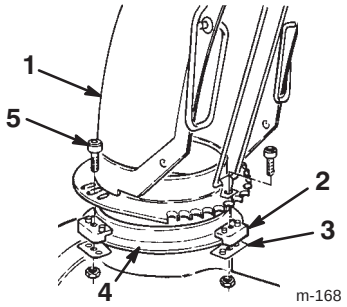

Figure 13

1. Discharge chute
2. Chute retainer (3)
3. Chute retainer plate (3)
4. Chute ring
5. Screw (3)
6. Locknut (3)

---

2. Set the discharge chute (open side forward) onto the discharge opening so that the chute retainers are on the chute ring (Fig. 13).

3. Tighten the screw and the locknut on the left side to position the chute retainer against the chute retainer plate and to secure the discharge chute to the chute ring (Fig. 13).

4. Push the other chute retainers toward the discharge chute (slotted), and tighten the screws (Fig. 13).

5. Ensure that the chute rotates freely on the chute ring. If the chute binds, move the right-hand retainer outward (Fig. 13).

Installing the Chute Control Gear

1. Remove the two screws from the chute control rod bracket on left side of the frame (Fig. 14).

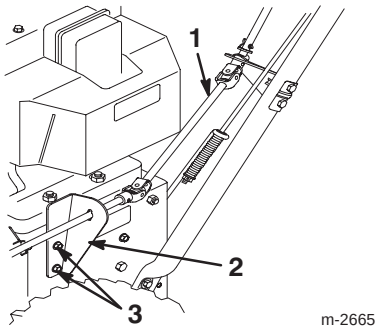

Figure 14

1. Chute control rod
2. Chute control rod bracket
3. Screws

---

2. Remove the chute control rod bracket.

3. Insert the chute control rod through the hole in the bracket.

4. Install the bracket with the two screws (Fig. 14).

5. Insert the carriage screw into the worm gear bracket mounting hole (Fig. 15).

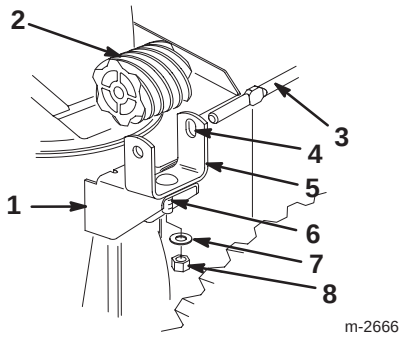

Figure 15

1. Mounting flange
2. Worm gear
3. Chute gear rod
4. Slotted hole
5. Worm gear bracket
6. Carriage screw
7. Flat washer
8. Locknut

---

6. Position the worm gear into the bracket, align the slotted holes in the worm gear and the bracket, and insert the chute gear rod through the slotted holes in the bracket and the worm gear (Fig. 15).

7. Loosely mount the worm gear and the bracket to the mounting flange with a carriage screw, a flat washer, and a locknut (Fig. 15).

8. Slide the worm gear into the teeth of the chute gear and tighten the locknut.

9. Operate the chute control. If the chute control binds, apply a light coat of grease to the worm gear and move it slightly outward.

Installing the Skids

1. Check the air pressure in the tires; refer to Checking the Tire Pressure on page 15.

2. Move the snowthrower to a flat surface and ensure that the scraper (Fig. 16) is parallel to the ground. If it is not, adjust the scraper; refer to Adjusting the Skids and the Scraper on page 21.

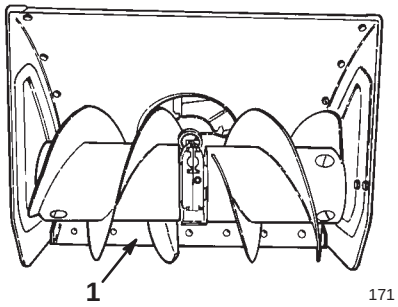

Figure 16

1. Scraper

---

3. Remove the two flange bolts and flat washers that secure the ends of the scraper to the side plates (Fig. 17).

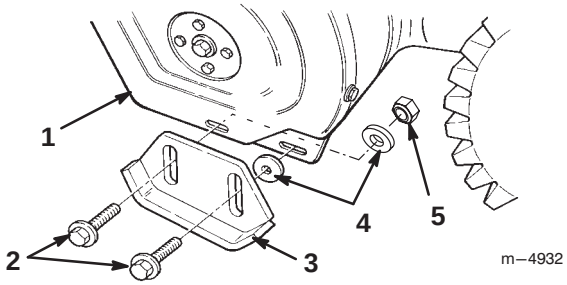

Figure 17

1. Side plate (2)
2. Flange bolts (4)
3. Skid (2)
4. Flat washers (4)
5. Locknut (2)

---

4. Insert a flange bolt through the rear slot in each skid.

5. Insert a washer *between each skid and the side plate* (Fig. 17). Do not tighten the bolts.

6. Install a flange bolt through the front slot of each skid and the side plate.

7. Insert a washer and a locknut *behind (on the inside of) the side plate* (Fig. 17). Do not tighten the bolts.

Note: The following steps describe how to adjust the skids for paved surfaces. For gravel or crushed rock surfaces, refer to Adjusting the Skids and the Scraper on page 21.

8. Support the *scraper* 1/8 inch (3 millimeters) above a level surface if you use the snowthrower on *smooth pavement.*

Note: The scraper should be higher than 1/8 inch (3 millimeters) above the pavement if it is cracked, rough, or uneven.

9. Move the skids down to sit flat on the ground and tighten the four flange bolts that secure both skids to the side plates.

Before Starting

Filling the Engine Crankcase with Oil

The engine comes from the factory with only a few ounces of oil in the crankcase. *Before starting the engine, add oil.* The crankcase holds 26 ounces (0.77 liters) of oil; however, because there is some oil in the crankcase, do not add the full amount at one time. Use only a high-quality, SAE 5W–30 or SAE 10 weight detergent oil that has the American Petroleum Institute (API) service classification SF, SG, SH, or SJ. For extremely cold conditions (below 0°F or –18°C), use 0W–30 weight detergent oil that has the American Petroleum Institute (API) service classification SF, SG, SH, or SJ.

To add oil:

1. Move the snowthrower to a level surface to ensure an accurate oil level reading.
2. Clean around the dipstick (Fig. 18).

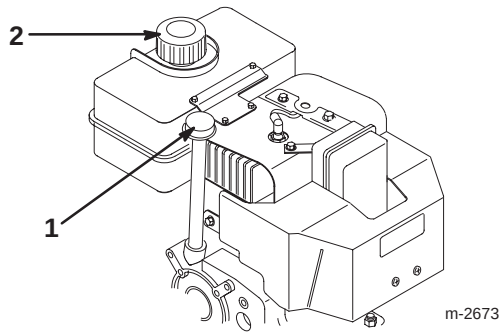

Figure 18

1. Dipstick 2. Fuel tank cap

3. Remove the dipstick by rotating the cap counterclockwise and pulling it out (Fig. 18).
4. Slowly pour about three-fourths of the crankcase capacity of oil into the crankcase.
5. Wipe the dipstick clean with a clean cloth.
6. Install the dipstick into the filler neck, then remove it.

Note: To ensure an accurate oil level reading, you must fully install the dipstick.

7. Read the oil level on the dipstick.
8. If the oil level is below the *Add* mark on the dipstick, *slowly* pour only enough oil into the filler hole to raise the oil level to the *Full* mark on the dipstick.

Important Do not overfill the crankcase with oil and run the engine; engine damage will result. Drain the excess oil until the oil level on the dipstick reads *Full*.

9. Insert the dipstick into the filler neck and rotate the cap clockwise until it is tight.

Filling the Fuel Tank with Gasoline

For best results, use clean, fresh, lead-free gasoline, including *oxygenated* or *reformulated* gasoline, with an octane rating of 87 or higher. To ensure freshness, purchase only the quantity of gasoline that you expect to use in 30 days. Using unleaded gasoline results in fewer combustion deposits and longer engine life. You may use leaded gasoline if unleaded gasoline is not available.

Important Do not add oil to the gasoline.

Important Do not use methanol, gasoline containing methanol, gasohol containing more than 10% ethanol, premium gasoline, or white gas. Using these fuels can damage the engine's fuel system.

Important Do not use gasoline that is more than 30 days old.

Danger

In certain conditions, gasoline is extremely flammable and highly explosive. A fire or explosion from gasoline can burn you and others and can damage property.

- **Fill the fuel tank outdoors, in an open area, and when the engine is cold. Wipe up any gasoline that spills.**
- **Do not fill the fuel tank completely full. Add gasoline to the fuel tank until the level is 1/4 to 1/2 in. (6 to 13 mm) below the bottom of the filler neck. This empty space in the tank allows the gasoline to expand.**
- **Never smoke when handling gasoline, and stay away from an open flame or where a spark may ignite the gasoline fumes.**
- **Store gasoline in an approved fuel container and keep it out of the reach of children.**
- **Never buy more than a 30-day supply of gasoline.**

Danger

When fueling, under certain circumstances, a static charge can develop, igniting the gasoline. A fire or explosion from gasoline can burn you and others and damage property.

- **Always place gasoline containers on the ground and away from your vehicle before filling.**
- **Do not fill gasoline containers inside a vehicle or on a truck or trailer bed because interior carpets or plastic truck bed liners may insulate the container and slow the loss of any static charge.**
- **When practical, remove gasoline-powered equipment from the truck or trailer and refuel the equipment with its wheels on the ground.**
- **If this is not possible, then refuel such equipment on a truck or trailer from a portable container, not from a gasoline dispenser nozzle.**
- **If you must use a gasoline dispenser nozzle, keep the nozzle in contact with the rim of the fuel tank or container opening at all times until fueling is complete.**

Use a fuel stabilizer/conditioner regularly during operation and storage. A stabilizer/conditioner cleans the engine during operation and prevents gum-like varnish deposits from forming in the engine during periods of storage.

Important Do not use fuel additives other than a fuel stabilizer/conditioner. Do not use fuel stabilizers with an alcohol base such as ethanol, methanol, or isopropanol.

1. Clean around the fuel tank cap (Fig. 18).
2. Remove the fuel tank cap.
3. Fill the fuel tank with unleaded to within 1/4 to 1/2 inch (6 to 13 millimeters) from the top of the tank. *Do not fill into the filler neck.*

Important Do not fill the fuel tank more than 1/4 inch (6 millimeters) from the top of the tank because the gasoline must have room to expand.

4. Install the fuel tank cap and wipe up any spilled gasoline.

Checking the Tire Pressure

Check the pressure of the tires because they are overinflated at the factory for shipping. Reduce the pressure equally in both tires to between 12 and 15 psi (82 and 103 kPa).

Reviewing the Maintenance Schedule

Review the Recommended Maintenance Schedule on page 20. You may need to perform one or more additional procedures before or soon after you begin operating the snowthrower.

Operation

Note: Determine the left and right sides of the machine from the normal operating position.

Operating Controls

- **Auger/Impeller Drive Control Lever** (Fig. 19)—To engage both the auger and impeller, press the lever against the right handgrip. To disengage, release the lever.

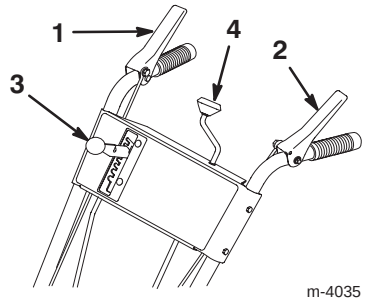

Figure 19

1. Auger/impeller drive control lever
2. Traction control lever
3. Speed selector control lever
4. Discharge chute control

- **Traction Control Lever** (Fig. 19)—To engage the traction (wheel drive), press the lever against the left handgrip. To stop the traction, release the lever.
- **Speed Selector** (Fig. 19)—This control has seven positions: five forward and two reverse gears. To change speeds, move the speed selector to the desired position. The lever locks in a notch at each speed selection. The speed selector may shift with difficulty in heavy load conditions.

  Note: Before shifting gears into or out of reverse, you must release the traction control lever. You may shift between any of the *forward* speeds without releasing the traction control lever.
- **Discharge Chute Control** (Fig. 19)—Rotate the discharge chute control clockwise to move the discharge chute to the left; counterclockwise to move the chute to the right.

- **Ignition Switch** (Fig. 20)—Insert the key before starting the engine. To stop the engine, remove the key.

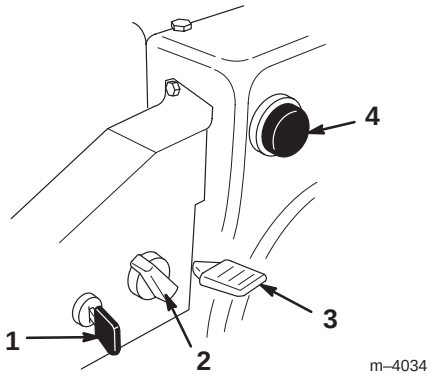

Figure 20

1. Ignition switch
2. Choke
3. Throttle
4. Primer

- **Choke** (Fig. 20)—Rotate the choke clockwise to the *On* position to start a cold engine. As engine warms up, gradually rotate the choke counterclockwise to the *Off* position.
- **Throttle** (Fig. 20)—Move the throttle upward to increase the engine speed; move it downward to decrease the engine speed. Move the throttle to the *Stop* position to stop the engine.
- **Primer** (Fig. 20)—Press the primer to pump a small amount of gasoline into the engine for improved cold-weather starting.
- **Fuel Shutoff Valve** (Fig. 21)—Close the valve by rotating it clockwise. Open the valve by rotating it counterclockwise. Close the valve when you do not use the snowthrower.

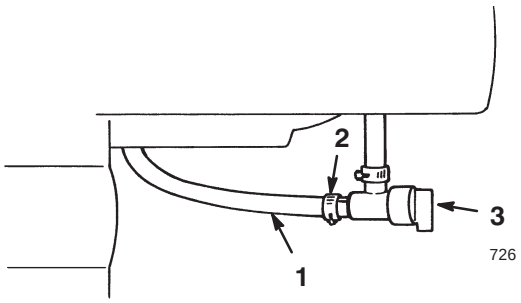

Figure 21

1. Fuel line
2. Hose clamp
3. Fuel shutoff valve

- **Recoil Starter** (Fig. 22)—The recoil starter is on the back side of the engine. Pull the recoil starter to start the engine.

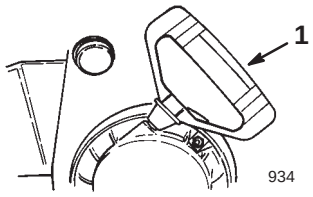

Figure 22

1. Recoil starter

- **Electric Starter** (Fig. 23)—Push the starter button to start the engine.

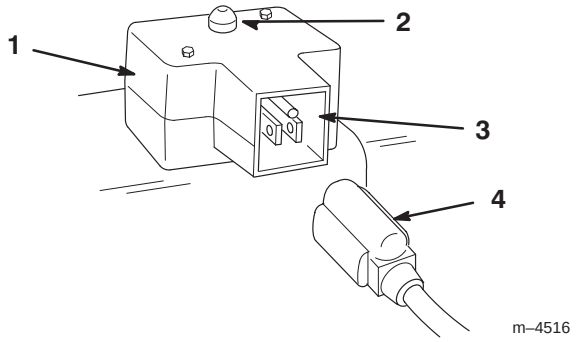

Figure 23

1. Electric starter
2. Starter button
3. Receptacle
4. Power cord

- **Power Cord** (Fig. 23)—Connect the power cord to the electric starter and to an electrical outlet when starting the engine.

Removing the Carburetor Heater Box

If you operate the engine when the air temperature is above 40°F (4°C), remove the carburetor heater box (Fig. 24).

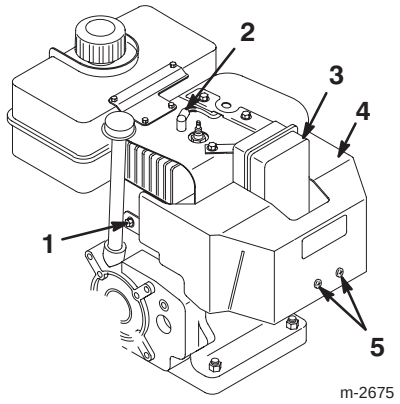

Figure 24

1. Screw and lock washer
2. Spark-plug wire
3. Bolt
4. Carburetor heater box
5. Screws

---

1. Disconnect the wire from the spark plug and ensure that the wire does not contact the plug (Fig. 24).

2. Remove the key from the ignition switch (Fig. 20).

3. Pull the choke knob off (Fig. 20).

4. Remove the fasteners that secure the carburetor heater box (Fig. 24).

Note: Install these fasteners in their holes for safe keeping.

5. Lift the carburetor heater box up and away from the engine.

6. Disconnect the green ground wire clip under the throttle (Fig. 25).

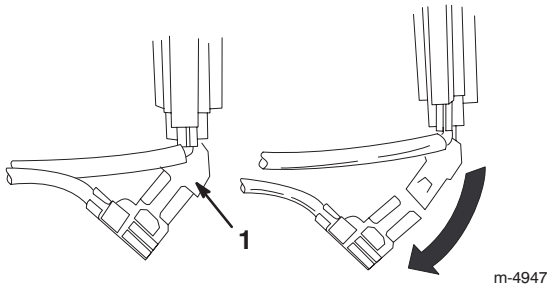

Figure 25

1. Green ground wire clip

---

7. Install the choke knob.

8. Insert the ignition key.

9. Connect the wire to the spark plug.

Important Use the carburetor heater box as a reference for the choke and throttle positions.

Installing the Carburetor Heater Box

To install the carburetor heater box, reverse steps 1 through 9 of Removing the Carburetor Heater Box on page 16. Remove the fasteners from their holes before installing the carburetor heater box.

Starting the Engine

Important Ensure that there are no obstructions in the auger/impeller and the discharge chute before you operate the snowthrower. *Use a stick, not your hand, to remove an obstruction from the auger/impeller or the discharge chute.*

1. Connect the wire to the spark plug.

2. Move the throttle to the *Fast* position.

3. Release the auger/impeller drive control lever and the traction control lever (Fig. 19).

4. Open the fuel shutoff valve below the fuel tank (Fig. 21).

5. Rotate the choke (Fig. 20) to the *On* position.

6. Insert the ignition key (Fig. 20).

Important Do not use the primer if the engine has been running and is hot. Excessive priming may flood the engine and prevent it from starting.

7. Cover the hole in the center of the primer (Fig. 20) with your thumb and push in the primer three times, pausing a moment between pushes.

8. For the recoil starter:

A. Grasp the recoil starter handle (Fig. 22) and pull it out slowly until positive engagement results; then pull the handle vigorously to start the engine.

B. Keep a firm grip on the starter handle and return the rope slowly.

For the electric starter:

A. Connect the power cord to the snowthrower (Fig. 23) and to a standard household power outlet.

Caution

If you leave the snowthrower plugged into a power outlet, someone can inadvertently start the snowthrower and injure people or damage property.

Unplug the power cord whenever you do are not starting the snowthrower.

B. Push the starter button.

Note: Run the electric starter no more than ten times at intervals of five seconds on, then five seconds off.

Important Running the electric starter extensively can overheat and damage the starter.

Note: If the engine does not start after this series of attempts, wait at least 40 minutes to allow the starter to cool before attempting to start it again.

Note: If the engine does not start after the second series of attempts, take the snowthrower to an Authorized Service Dealer for service.

C. When the engine starts, disconnect the power cord from the snowthrower and the outlet.

Note: If the engine does not start or if the air temperature is –10°F (–23°C) or colder, the engine may need additional priming. After pushing in the primer, try to start the engine before priming again.

9. After the engine starts, immediately rotate the choke (Fig. 20) to the 3/4 position. As the engine warms up, rotate the choke to the 1/2 position. When the engine warms up sufficiently, rotate the choke to the *Off* position.

10. Move the speed selector (Fig. 19) to first gear, squeeze the traction control lever to the handgrip, and then release the traction control lever. If the snowthrower moves forward before engaging the traction drive control lever or after releasing the lever, see Adjusting the Traction Drive Belt on page 22.

Important Ensure that the auger and impeller do not rotate while the auger/impeller drive control lever is in the *Disengaged* position. Stand in the operating position and look around to the side of the auger housing (Fig. 26). A large screw head on the side of the auger housing rotates when the auger and impeller rotate (Fig. 26). *If the auger and impeller rotate while the engine runs and the auger/impeller drive control lever is disengaged, stop the snowthrower immediately.* Refer to Adjusting the Auger/Impeller Drive Belt on page 24. If the problem persists, take the snowthrower to an Authorized Service Dealer for service.

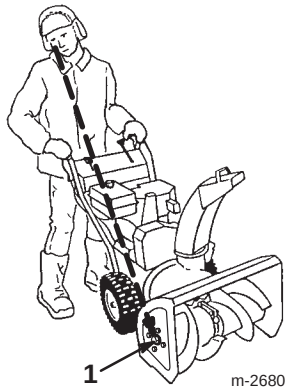

Figure 26

1. Large screw head

Stopping the Engine

1. Engage the auger to clear any remaining snow from inside the housing.

2. Run the engine for a few minutes to dry off any accumulated moisture.

3. Release the auger/impeller drive control lever and the traction control lever (Fig. 19).

4. Stop the engine by doing one of the following:

A. Move the throttle to the *Slow* position and remove the ignition key.

B. Move the throttle to the *Stop* position.

5. Close the fuel shutoff valve (Fig. 21).

6. Pull the recoil starter with a rapid, continuous, full arm stroke three or four times. This helps prevent the recoil starter from freezing up.

7. Wait for all moving parts to stop before leaving the operating position.

Freewheeling or Self-propel Drive

You can operate the snowthrower with the self-propel feature engaged or disengaged (freewheeling). When you insert the axle pins through the outer axle holes and not

through the wheel hubs (Fig. 5), the snowthrower freewheels. When you insert the axle pins through the holes in the wheel hubs and the inner axle holes (Fig. 5) and engage the traction control lever, the snowthrower propels itself.

Snowthrowing Tips

Danger

When the snowthrower is in operation, the impeller and auger can be rotating and cut off or injure hands and feet.

- **Before adjusting, cleaning, repairing and inspecting the snowthrower, and before unclogging the discharge chute, *stop the engine and wait for all moving parts to stop.* Disconnect the wire from the spark plug and keep it away from the plug to prevent someone from accidentally starting the engine.**
- **Use a stick, *not your hands*, to remove an obstruction from the discharge chute.**
- **Stay behind the handles and away from the discharge opening while operating the snowthrower.**
- **Keep face, hands, feet, and any other part of your body or clothing away from concealed, moving, or rotating parts.**

Warning

The auger/impeller may pick up and throw stones, toys, and other foreign objects, causing serious personal injury to the operator or to bystanders.

- **Keep the area to be cleared free of all objects that could be picked up and thrown by the auger/impeller.**
- **Keep all children and pets away from area of operation.**

- Adjust the skids to match the type of surface being cleaned. Refer to Adjusting the Skids and the Scraper on page 21.
- In snowy and cold conditions, some controls and moving parts may freeze. *Do not use excessive force when trying to operate frozen controls.* If you have difficulty operating any control or part, start the engine and let it run for a few minutes.
- Remove snow as soon as possible after it falls. This produces the best snow removal results.
- Always use the *Fast* throttle position when throwing snow.
- Overlap each swath to ensure complete snow removal.
- Discharge the snow downwind whenever possible.
- Do not overload the snowthrower by clearing snow at too fast a rate. If the engine slows down, shift the snowthrower into a lower gear to reduce the forward speed.
- In wet or slushy conditions, maintain maximum engine speed, and do not overload the engine to prevent clogging the discharge chute.
- If the front of the snowthrower tends to ride up, reduce the forward speed by shifting the snowthrower into a lower gear. If the front still tends to ride up, lift up on both handgrips to hold down the front of snowthrower.
- If the wheels slip, shift the snowthrower into a lower gear to reduce the forward speed.
- After clearing the snow, let the engine run for a few minutes to prevent moving parts from freezing. Engage the auger/impeller to clear any remaining snow from inside the housing. Shut off the engine, wait for all moving parts to stop, and remove all ice and snow from the snowthrower.
- With the engine shut off, pull the recoil starter handle several times to prevent the recoil starter from freezing up.
- When you are not using the snowthrower, close the fuel shutoff valve and remove the key.

Maintenance

Note: Determine the left and right sides of the machine from the normal operating position.

Recommended Maintenance Schedule

Maintenance Service Interval	Maintenance Procedure
Initially	• Check the engine oil level.[1] Refer to Checking the Engine Oil Level on page 21. • Check the auger gearbox oil level and add oil if necessary. Refer to Checking the Auger Gearbox Oil Level on page 21. • Adjust the skids and the scraper.[2] Refer to Adjusting the Skids and the Scraper on page 21. • Adjust the speed selector.[3] Refer to Adjusting the Speed Selector on page 22.
1 Hour	• Inspect and adjust the traction drive belt. Refer to Adjusting the Traction Drive Belt on page 22. • Inspect and adjust the auger/impeller drive belt. Refer to Adjusting the Auger/Impeller Drive Belt on page 24.
2 Hours	• Change the engine oil. Refer to Changing the Engine Oil on page 26.
5 Hours	• Inspect and adjust or replace the traction drive belt if necessary. Refer to Adjusting the Traction Drive Belt on page 22, or to Replacing the Traction Drive Belt on page 22. • Inspect and adjust or replace the auger/impeller drive belt if necessary. Refer to Adjusting the Auger/Impeller Drive Belt on page 24, or to Replacing the Auger/Impeller Drive Belt on page 25.
10 Hours	• Check the auger gearbox oil level and add oil if necessary. Refer to Checking the Auger Gearbox Oil Level on page 21.
15 Hours	• Oil and grease the internal moving parts. Refer to Lubricating the Snowthrower on page 26.
25 Hours	• Change the engine oil. Refer to Changing the Engine Oil on page 26.
100 Hours	• Inspect and gap the spark plug. Replace it if necessary. Refer to Replacing the Spark Plug on page 27.
Annually	• Check the auger gearbox oil level after removing the snowthrower from storage and add oil if necessary. Refer to Checking the Auger Gearbox Oil Level on page 21. • Change the engine oil at the end of the snowthrowing season. Refer to Changing the Engine Oil on page 26. • Oil and grease the internal moving parts at the end of the snowthrowing season. Refer to Lubricating the Snowthrower on page 26. • Drain the gasoline and run the engine to dry out the fuel tank and the carburetor at the end of the snowthrowing season. Refer to Emptying the Fuel Tank on page 27.

[1]Check the engine oil level *before each use* and add oil if necessary.

[2]Adjust the skids and the scraper as needed.

[3]Adjust the speed selector as needed.

Important Refer to your engine operator's manual for additional maintenance procedures.

Caution

If you leave the wire on the spark plug, someone could accidently start the engine and seriously injure you or other bystanders.

Disconnect the wire from the spark plug before you do any maintenance. Set the wire aside so that it does not accidentally contact the spark plug.

Checking the Engine Oil Level

Every time you use the snowthrower, first ensure that the oil level is between the *Add* and the *Full* marks on the dipstick.

1. Stop the engine and wait for all moving parts to stop.
2. Move the snowthrower to a level surface to ensure an accurate oil level reading.
3. Clean around the dipstick (Fig. 18).
4. Remove the dipstick by rotating the cap counterclockwise and pulling it out (Fig. 18).
5. Wipe the dipstick clean with a clean cloth.
6. Install the dipstick into the filler neck, then remove it.

   Note: To ensure an accurate oil level reading, you must fully install the dipstick.
7. Read the oil level on the dipstick.
8. If the oil level is below the *Add* mark on the dipstick, *slowly* pour only enough oil into the filler hole to raise the oil level to the *Full* mark on the dipstick.

   Note: Use only a high-quality, SAE 5W–30 or SAE 10 weight detergent oil that has the American Petroleum Institute (API) service classification SF, SG, SH, or SJ. For extremely cold conditions (below 0°F or –18°C), use 0W–30 weight detergent oil that has the American Petroleum Institute (API) service classification SF, SG, SH, or SJ.

Important Do not overfill the crankcase with oil and run the engine; engine damage will result. Drain the excess oil until the oil level on the dipstick reads *Full*.

9. Insert the dipstick into the filler neck and rotate the cap clockwise until it is tight.

Checking the Auger Gearbox Oil Level

Check the auger gearbox initially, after every ten operating hours, and when you remove the snowthrower from annual storage.

1. Stop the engine and wait for all moving parts to stop.
2. Move the snowthrower to a level surface.
3. Disconnect the wire from the spark plug and ensure that the wire does not contact the spark plug (Fig. 24).
4. Clean the area around the pipe plug (Fig. 27).

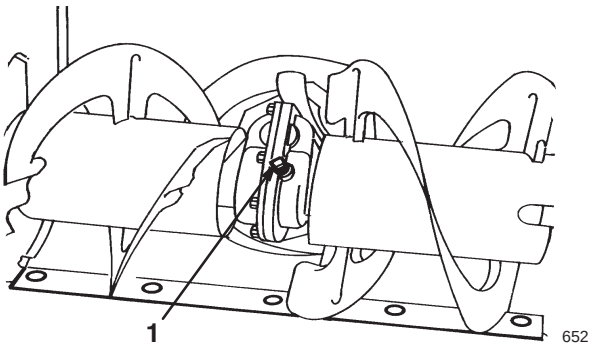

Figure 27

1. Pipe plug

5. Remove the pipe plug from the gearbox (Fig. 27).
6. Check the oil level in the gearbox. The oil should be at the point of overflowing in the filler opening.
7. If the oil level is low, add *GL-5* or *GL-6 SAE 85–95 EP* transmission oil to the gearbox until the point of overflow. *Do not use synthetic gear oil.*
8. Install the pipe plug in the gearbox.
9. Connect the wire to the spark plug.

Adjusting the Skids and the Scraper

Adjust the skids and the scraper initially and then as needed to ensure that the auger does not contact the paved or gravel surface. Also, adjust them as needed to compensate for wear.

1. Stop the engine and wait for all moving parts to stop.
2. Move the snowthrower to a level surface.
3. Disconnect the wire from the spark plug and ensure that the wire does not contact the plug (Fig. 24).
4. Check the tire pressure in the tires. Refer to Checking the Tire Pressure on page 15.

5. Loosen the four flange nuts that secure both skids to the auger side plates (Fig. 17) until the skids slide up and down easily.

6. Support the *auger blades* so that they are at least 1/8 inch (3 millimeters) off the ground (Fig. 28).

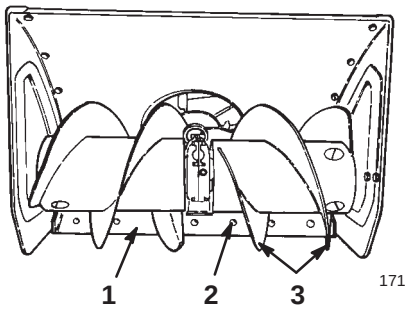

Figure 28

1. Scraper
2. Carriage bolt (6)
3. Auger blades

7. Check the scraper adjustment. The scraper should be 1/8 inch (3 millimeters) above and parallel to a level surface.

For Concrete and Asphalt Surfaces:

If the snowthrower does not clear the snow close enough to the pavement, adjust the skids to lower the scraper; if the pavement surfaces are cracked, rough, or uneven, adjust the skids to raise the scraper.

For Gravel Surfaces:

Support the auger blades a few inches (centimeters) above the ground, and adjust the skids to prevent the snowthrower from picking up rocks.

8. To adjust the scraper, loosen the carriage bolts that secure the scraper to the auger housing (Fig. 28), level the scraper, and tighten the carriage bolts.

9. Move the skids down as far as possible.

10. Tighten the two front flange bolts that secure both skids to the auger side plates.

11. Connect the wire to the spark plug.

Adjusting the Speed Selector

Adjust the speed selector linkage initially and when the snowthrower is slow, first gear has no speed, or the speed selector does not move into fifth gear.

1. Stop the engine and wait for all moving parts to stop.

2. Disconnect the wire from the spark plug and ensure that the wire does not contact the plug (Fig. 24).

3. Move the speed selector (Fig. 19) on the control panel to the R_2 (*Reverse*) position.

4. Remove the cotter pin and the flat washer (Fig. 6).

5. Pull the speed selector rod out of the hole in the speed selector arm (Fig. 6).

6. Adjust the forward speed by rotating the speed selector rod in the trunnion (Fig. 8).

   Note: Lengthening the rod makes the forward speed faster; shortening the rod makes the forward speed slower.

7. Insert the speed selector rod into the speed selector arm and secure it with the flat washer and cotter pin.

8. Connect the wire to the spark plug.

Adjusting the Traction Drive Belt

Check the traction drive belt for the proper tension after the first operating hour, after every five operating hours thereafter, and when the speed selector shifts properly but the snowthrower does not drive in the forward or reverse speeds. Adjust the belt when necessary.

1. Stop the engine and wait for all moving parts to stop.

2. Disconnect the wire from the spark plug and ensure that the wire does not contact the plug (Fig. 24).

3. Check the adjustment according to steps 3 through 6 of Installing the Traction Rod on page 11. Make any needed adjustments.

4. If the linkage is properly adjusted and the problem persists, contact an Authorized Service Dealer.

5. Connect the wire to the spark plug.

Replacing the Traction Drive Belt

If the traction drive belt becomes worn, oil-soaked, or otherwise damaged, replace the belt.

1. Stop the engine and wait for all moving parts to stop.

2. Disconnect the wire from the spark plug and ensure that the wire does not contact the plug (Fig. 24).

3. Remove the three bolts that hold the belt cover in place and set the cover aside (Fig. 29).

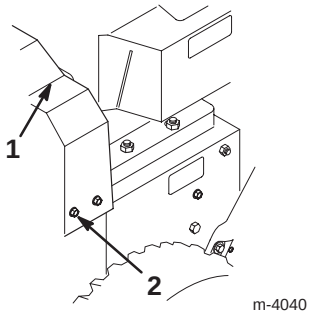

Figure 29

1. Upper belt cover
2. Bolt (3)

4. Loosen the auger brake arm assembly by loosening the rearmost screw and removing the front screw (Fig. 30).

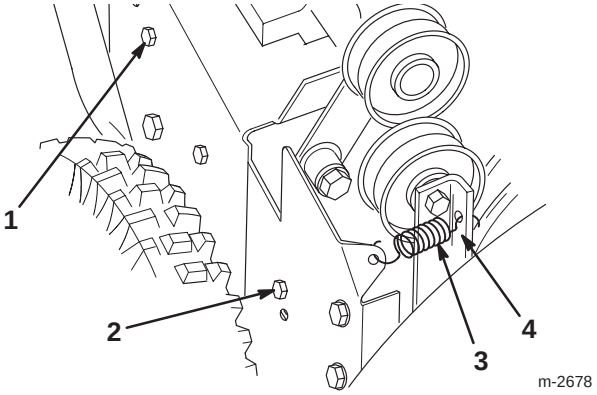

Figure 30

1. Rearmost screw
2. Front screw
3. Idler pulley spring
4. Auger brake arm

5. Remove the idler pulley spring (Fig. 30). Let the brake arm assembly hang free but out of the way.

6. Remove two bolts, two washers, and two lock washers that secure the belt guide (Fig. 31).

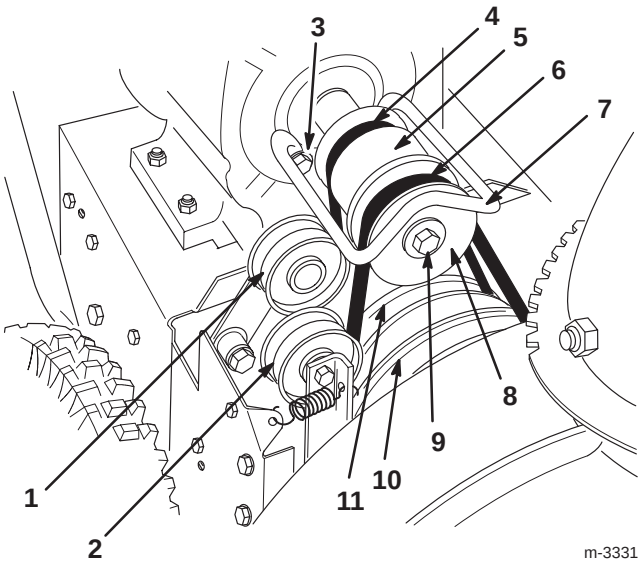

Figure 31

1. Traction idler pulley
2. Idler pulley
3. Bolt, washer, and lock washer (2)
4. Traction drive belt
5. Engine pulley
6. Auger/impeller drive belt
7. Belt guide
8. Engine pulley sheave
9. Engine crankshaft bolt, lock washer, and washer
10. Large auger/impeller pulley
11. Traction pulley

7. Remove the engine crankshaft bolt, lock washer, and washer (Fig. 31).

8. Separate and remove the engine pulley sheave (Fig. 31).

9. Remove the auger/impeller drive belt, leaving it looped around the large auger/impeller pulley.

10. Remove the engine pulley (Fig. 31).

11. Remove the traction drive belt from the traction pulley and the engine crankshaft (Fig. 31).

12. Pull the traction idler pulley outward and install a new traction drive belt (Fig. 31).

13. Install the engine pulley.

Note: Do not to pinch the traction drive belt (Fig. 32).

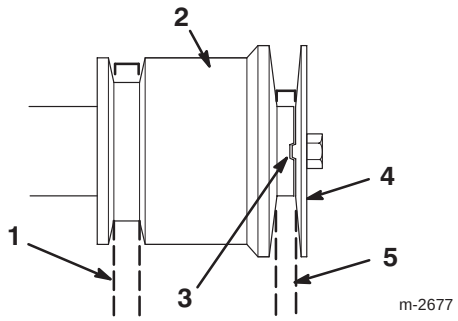

Figure 32

1. Traction drive belt
2. Engine pulley
3. Indexing rib in indexing notch
4. Engine pulley sheave
5. Auger/impeller drive belt

14. Pull the idler pulley outward and loop the auger/impeller drive belt in front of the engine pulley, ensuring that the belt is on the inside of the idler pulley (Fig. 31).

15. Install the engine pulley sheave, ensuring that the indexing rib in the engine pulley sheave aligns with the indexing notch in the engine pulley (Fig. 32).

16. Install the washer, lock washer, and crankshaft screw that secures the engine pulley sheave (Fig. 32).

Note: Do not pinch the auger/impeller drive belt (Fig. 32).

17. Ensure that the brake pad is properly installed on the brake arm. Position the angled cutoff on the brake pad as shown in Figure 33.

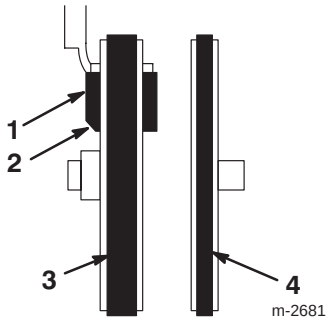

Figure 33

View from left side of unit

1. Brake pad
2. Angled cutoff
3. Auger/impeller drive belt
4. Traction drive belt

18. Install the two screws that secure the auger brake arm assembly. Ensure that the tabs fit into the holes in the left side of the snowthrower (Fig. 34).

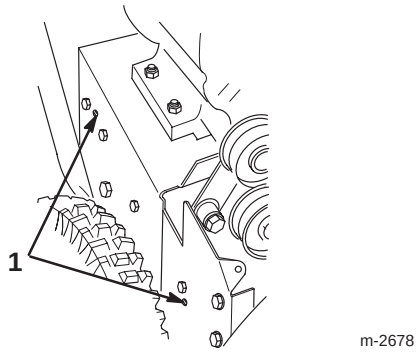

Figure 34

1. Tabs in holes

19. Have someone squeeze the auger/impeller drive control lever (Fig. 19) against the handgrip, and install the belt guide using two screws, two washers, and two lock washers.

20. Check and adjust the belt guide, and ensure that it does not contact any part of the engine pulley.

21. Check and adjust the auger/impeller drive control linkage. Refer to steps 5 through 7 of Installing the Auger/Impeller Drive Control Linkage on page 11.

22. Install the idler pulley spring.

23. Install the belt cover with the three bolts.

24. Connect the wire to the spark plug.

Important Ensure that the auger and impeller do not rotate while the auger/impeller drive control lever is in the *Disengaged* position. Stand in the operating position and look around to the side of the auger housing (Fig. 26). A large screw head on the side of the auger housing rotates when the auger and impeller rotate (Fig. 26). *If the auger and impeller rotate while the engine runs and the auger/impeller drive control lever is disengaged, stop the snowthrower immediately.* Refer to Adjusting the Auger/Impeller Drive Belt on page 24. If the problem persists, take the snowthrower to an Authorized Service Dealer for service.

Adjusting the Auger/Impeller Drive Belt

Operating the snowthrower with an auger/impeller drive belt that slips decreases the snowthrowing performance and damages the belt. Check the auger/impeller drive belt for the proper tension after the first operating hour, after every five operating hours thereafter. Adjust the belt when necessary.

Danger

Improperly adjusting the auger/impeller may cause it to turn when disengaged. A rotating auger or impeller can cut off or injure fingers, hands, or feet.

- **Keep your face, hands, feet, and any other part of your body or clothing away from concealed, moving, or rotating parts.**
- **Ensure that the impeller brake arm clearance is maintained.**
- **Do not adjust the auger/impeller drive belt too tight because it may cause the auger/impeller to turn when the control lever is in the *Disengaged* position. If this occurs, decrease the belt tension.**

1. Stop the engine and wait for all moving parts to stop.
2. Disconnect the wire from the spark plug and ensure that the wire does not contact the plug (Fig. 24).
3. Check the adjustment according to steps 5 through 7 of Installing the Auger/Impeller Drive Control Linkage on page 11. Make any needed adjustments.
4. Connect the wire to the spark plug.
5. Check the belt tension by operating the auger.
6. If the belt still slips, replace it. Refer to Replacing the Auger/Impeller Drive Belt on page 25.

Important Do not operate the snowthrower if the auger and the impeller still rotate when you disengage the auger/impeller drive control lever. Take the snowthrower to an Authorized Service Dealer for service.

Replacing the Auger/Impeller Drive Belt

If the auger/impeller drive belt becomes worn, oil-soaked, or otherwise damaged, replace the belt.

1. Stop the engine and wait for all moving parts to stop.
2. Disconnect the wire from the spark plug and ensure that the wire does not contact the plug (Fig. 24).
3. Remove the three bolts that hold the belt cover in place and set the cover aside (Fig. 29).
4. Loosen the auger brake arm assembly by loosening the rear screw and removing the front screw that fasten the auger brake arm assembly to the frame (Fig. 30).
5. Remove the idler pulley spring (Fig. 30). Let the brake arm assembly to hang free but out of the way.
6. Remove the two bolts, two washers, and two lock washers that secure the belt guide (Fig. 31).
7. Remove the engine crankshaft bolt, lock washer, and washer (Fig. 31).
8. Separate and remove the engine pulley sheave (Fig. 31).
9. Remove the auger/impeller drive belt (Fig. 31).
10. Pull the idler pulley outward and install a new belt around the large auger/impeller pulley (Fig. 31).
11. Loop the belt in front of the engine pulley, and ensure that the belt is on the inside of the idler pulley (Fig. 31).
12. Install the engine pulley sheave, the washer, the lock washer, and the engine crankshaft bolt.

    Note: Ensure that the indexing rib in the engine pulley sheave aligns with the indexing notch in the center engine pulley. Do not pinch the belt (Fig. 32).
13. Ensure that the brake pad is properly installed on the brake arm. Position the angled cutoff on the brake pad as shown in Figure 33.
14. Install the two screws that secure the auger brake arm assembly. Ensure that the tabs fit into the holes in the right side of the snowthrower (Fig. 34).
15. Have someone squeeze the auger/impeller drive control lever against the handgrip, and install the belt guide using the two bolts, two washers, and two lock washers.
16. Check and adjust the belt guide. Ensure that the belt guide is about 1/8 inch (0.3 centimeters) from the belt or the engine pulley.
17. Check and adjust the auger/impeller drive control linkage. Refer to steps 5 through 7 of Installing the Auger/Impeller Drive Control Linkage on page 11.
18. Install the idler pulley spring.
19. Install the belt cover with the three bolts.
20. Connect the wire to the spark plug.

Important Ensure that the auger and impeller do not rotate while the auger/impeller drive control lever is in the *Disengaged* position. Stand in the operating position and look around to the side of the auger housing (Fig. 26). A large screw head on the side of the auger housing rotates when the auger and impeller rotate (Fig. 26). *If the auger and impeller rotate while the engine runs and the auger/impeller drive control lever is disengaged, stop the snowthrower immediately.* Refer to Adjusting the

Auger/Impeller Drive Belt on page 24. If the problem persists, take the snowthrower to an Authorized Service Dealer for service.

Lubricating the Snowthrower

Lightly lubricate all moving parts of the snowthrower after every 15 operating hours and at the end of the snowthrowing season.

Important Do not get oil or grease on the rubber wheel or friction drive plate because the wheel will slip and the rubber may deteriorate.

1. Stop the engine and wait for all moving parts to stop.
2. Disconnect the wire from the spark plug and ensure that the wire does not contact the plug (Fig. 24).
3. Drain the gasoline from the fuel tank; refer to Emptying the Fuel Tank on page 27.
4. Tip the snowthrower forward onto its auger housing and block it so that it cannot fall.
5. Remove the eight bolts that hold the back and the bottom covers in place and remove the covers (Fig. 35).

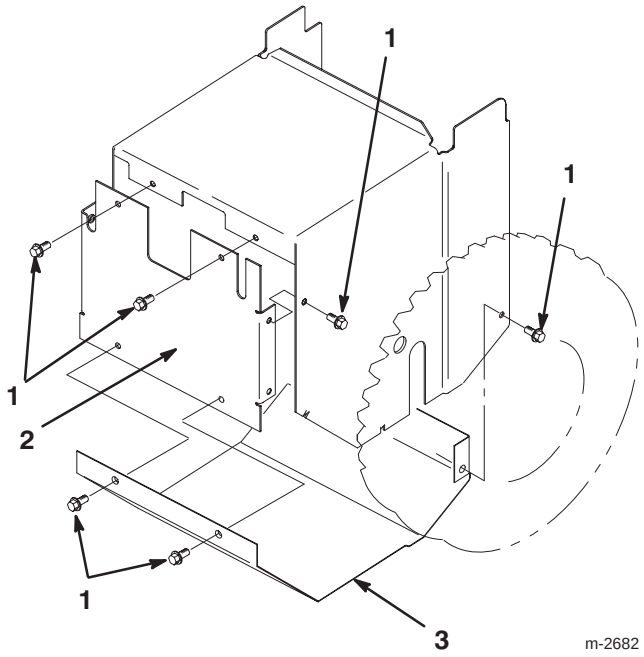

Figure 35

1. Bolts
2. Back cover
3. Bottom cover

6. Lightly lubricate the snowthrower with light oil as shown in Figures 36 and 37.

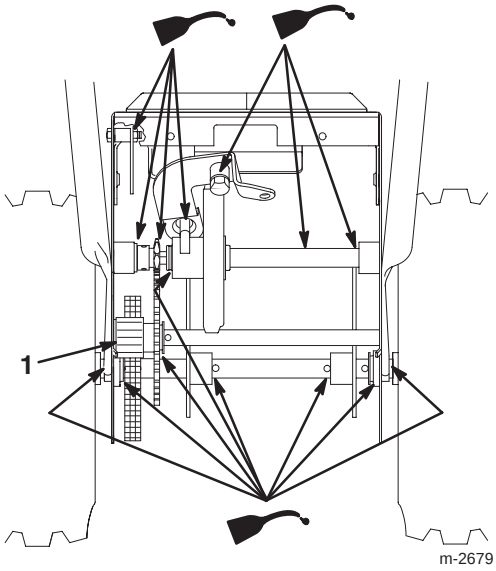

Figure 36

1. Axle gear

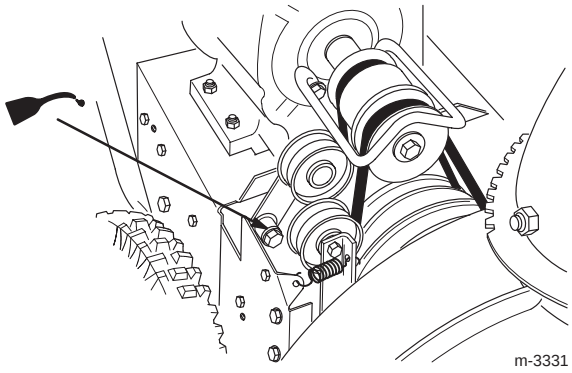

Figure 37

7. Wipe up any excess oil.
8. Lightly grease the axle gear (Fig. 36).
9. Wipe up any excess grease.
10. Install the back and the bottom covers.
11. Return the snowthrower to its upright position.
12. Connect the wire to the spark plug.

Changing the Engine Oil

Change the engine oil after the first two operating hours, after every 25 operating hours, and at the end of the snowthrowing season. If possible, run the engine just before changing the oil because warm oil flows better and carries more contaminants.

1. Stop the engine and wait for all moving parts to stop.

2. Disconnect the wire from the spark plug and ensure that the wire does not contact the spark plug (Fig. 24).

3. Clean the area around the oil drain plug (Fig. 38).

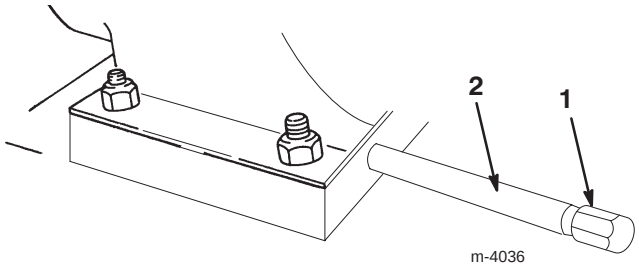

Figure 38

1. Oil drain plug
2. Drain extension

4. Slide an oil drain pan under the drain extension and remove the oil drain plug.

5. Drain the oil.

6. Install the oil drain plug.

7. Fill the crankcase with oil. Refer to Filling the Engine Crankcase with Oil on page 14.

8. Wipe up any spilled oil.

9. Connect the wire to the spark plug.

Replacing the Spark Plug

Use a *Champion RJ-19LM* or equivalent spark plug. Install a new plug after every 100 operating hours.

1. Stop the engine and wait for all moving parts to stop.

2. Clean any debris from around the base of the spark plug.

3. Disconnect the wire from the spark plug (Fig. 24).

4. Remove the spark plug.

5. Examine the spark plug and replace it if it is cracked, fouled, dirty, or if the electrodes are worn.

Important Do not clean the electrodes because grit could enter the cylinder and damage the engine.

6. Set the gap between the electrodes on the spark plug at 0.030 in. (0.76 mm) as shown in Figure 39.

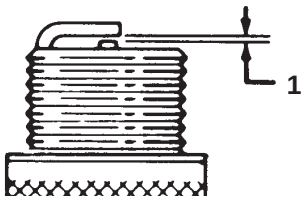

Figure 39

1. 0.030 in. (0.76 mm)

7. Install the spark plug by hand and then torque it to 15 ft-lb (20.4 N·m). If you do not have a torque wrench, tighten the plug firmly.

8. Connect the wire to the spark plug.

Emptying the Fuel Tank

1. Stop the engine and wait for all moving parts to stop.

2. Disconnect the wire from the spark plug (Fig. 24)

3. Close the fuel shutoff valve (Fig. 21).

Danger

Gasoline is highly flammable; it can ignite and cause serious personal injury.

- **Drain gasoline outdoors.**
- **Drain gasoline from a cold engine only.**
- **Wipe up any gasoline that may have spilled.**
- **Do not drain gasoline near any open flame or where gasoline fumes may be ignited by a spark.**
- ***Do not smoke* a cigar, a cigarette, or a pipe when handling gasoline.**

4. Place a clean drain pan under the fuel shutoff valve.

5. Loosen the hose clamp that secures the fuel line to the valve and slide the fuel line off the fuel shutoff valve (Fig. 21).

6. Open the fuel shutoff valve and allow the fuel to drain out of the fuel tank into the drain pan.

7. Install the fuel line onto the fuel shutoff valve and secure it with a hose clamp.

8. Connect the wire to the spark plug.

9. Start the snowthrower and run the engine until it stops. Repeat this step two more times to ensure that the fuel tank and the carburetor are empty.

Storage

Warning

Gasoline fumes are highly flammable, explosive, and dangerous if inhaled. If the product is stored in an area with an open flame, the gasoline fumes may ignite and cause an explosion.

Do not store the snowthrower in a house (living area), basement, or any other area where ignition sources may be present, such as hot water and space heaters, clothes dryers, furnaces, and other like appliances.

Preparing the Fuel System

1. Add stabilizer/conditioner to the fuel in the fuel tank as directed.
2. Run the engine for ten minutes to distribute conditioned fuel through the fuel system.
3. Stop the engine, allow it to cool, and drain the fuel tank or run the engine until it stops. Refer to Emptying the Fuel Tank on page 27.
4. Start the engine and run it until it stops.
5. Choke or prime the engine, start it a third time, and run the engine until it will not start.
6. Dispose of unused fuel properly. Recycle it according to local codes, or use it in your automobile.

Note: Do not store stabilized gasoline for more than 90 days.

Preparing the Engine

1. While the engine is still warm, change the engine oil. Refer to Changing the Engine Oil on page 26.
2. Remove the spark plug.
3. Use an oil can to squirt two teaspoons of oil into the spark plug hole.
4. Install the spark plug by hand and then torque it to 15 ft-lb (20.4 N·m). If you do not have a torque wrench, tighten the plug firmly. *Do not connect the wire to the plug.*
5. Pull the recoil starter slowly to distribute the oil on the inside of the cylinder.

Preparing the Snowthrower

1. Lubricate the snowthrower. Refer to Lubricating the Snowthrower on page 26.
2. Clean the snowthrower.
3. Touch up chipped surfaces with paint available from an Authorized Service Dealer. Sand affected areas before painting, and use a rust preventative to prevent the metal parts from rusting.
4. Tighten any loose fasteners. Repair or replace any damaged parts.
5. Cover the snowthrower and store it in a clean, dry place out of the reach of children. Allow the engine to cool before storing it in any enclosure.

Accessories

You can obtain the following snowthrower accessories from an Authorized Service Dealer:

- Tire Chain Kit
- Drift Breaker Kit
- Snow Cab Kit
- Heavy-duty Skids Kit
- Light Kit

Troubleshooting

Toro designed and built your snowthrower for trouble-free operation. Check the following components and items carefully, and refer to Maintenance on page 20 for more information. If a problem continues, see an Authorized Service Dealer.

Problem	Possible Causes	Corrective Action
Electric starter does not turn (electric-start models only)	1. The power cord is disconnected at the outlet or the snowthrower.	1. Connect the power cord to the outlet and/or the snowthrower.
	2. The power cord is worn, corroded, or damaged.	2. Replace the power cord.
	3. The power outlet is not energized.	3. Have a qualified electrician energize the power outlet.
Engine does not start or starts hard	1. The key is not in the ignition or is in the *Off* position.	1. Insert the key into the ignition and turn it to the *On* position.
	2. The choke is in the *Off* position and the primer has not been pressed.	2. Move the choke to the *On* position and press the primer three times.
	3. The fuel shutoff valve is not open.	3. Open the fuel shutoff valve.
	4. The throttle is not in the *Fast* position.	4. Move the throttle to the *Fast* position.
	5. The fuel tank is empty or the fuel system contains stale fuel.	5. Drain and/or fill the fuel tank with fresh gasoline (not more than 30 days old). If the problem persists, contact your Authorized Service Dealer.
	6. The spark plug wire is loose or disconnected.	6. Connect the wire to the spark plug.
	7. The spark plug is pitted, fouled, or the gap is incorrect.	7. Check the spark plug and adjust the gap if necessary. Replace the spark plug if it is pitted, fouled, or cracked.
	8. The fuel cap vent is restricted.	8. Remove the vent restriction or replace the fuel cap.
	9. The engine oil level in the engine crankcase is too low or too high.	9. Add or drain oil to adjust the oil level in engine crankcase to the *Full* mark on the dipstick.
	10. The air temperature is above 40°F (4°C) and the carburetor heater box is on the snowthrower.	10. Remove the carburetor heater box.
Engine runs rough	1. The choke is in the *On* position.	1. Move the choke to the *Off* position.
	2. The fuel shutoff valve is not completely open.	2. Open the fuel shutoff valve.

Problem	Possible Causes	Corrective Action
	3. The fuel tank is nearly empty or contains stale fuel.	3. Drain and fill the fuel tank with fresh gasoline (not more than 30 days old). If the problem persists, contact an Authorized Service Dealer.
	4. The spark plug wire is loose.	4. Connect the wire to the spark plug.
	5. The spark plug is pitted, fouled, or the gap is incorrect.	5. Check the spark plug and adjust the gap if necessary. Replace the spark plug if it is pitted, fouled, or cracked.
	6. The engine oil level in the engine crankcase is too low or too high.	6. Add or drain the oil level in the engine crankcase to the *Full* mark on the dipstick.
	7. The air temperature is above 40°F (4°C) and the carburetor heater box is on the snowthrower.	7. Remove the carburetor heater box.
Engine runs, but the snowthrower discharges snow poorly or not at all	1. The throttle is not in the *Fast* position when throwing snow.	1. Move the throttle to the *Fast* position.
	2. The snowthrower is moving too fast to clear the snow.	2. Shift the snowthrower into a lower gear.
	3. You are trying to remove too much snow per swath.	3. Reduce the amount of snow removed for per swath.
	4. You are trying to remove extremely heavy or wet snow.	4. Don't overload the snowthrower with extremely heavy or wet snow.
	5. The discharge chute is plugged.	5. Stop the engine, wait for all moving parts to stop, and use a stick to remove the snow from the discharge chute.
	6. The auger/impeller drive belt is loose or is off the pulley.	6. Install and/or adjust the auger/impeller drive belt.
	7. The auger/impeller drive belt is worn or broken.	7. Replace the auger/impeller drive belt.
Snowthrower does not properly clear the snow off the surface	1. The tire pressure is low.	1. Check the pressure in the tires and adjust it if necessary.
	2. The skids and/or the scraper is not properly adjusted.	2. Adjust the skids and the scraper.

Gas Powered
Snow Products

The Toro Total Coverage Guarantee

A Two-Year Full Warranty
(Limited Warranty for Commercial Use)

Conditions and Products Covered

The Toro Company and its affiliate, Toro Warranty Company, pursuant to an agreement between them, jointly promise to repair any Toro Product used for normal residential purposes* if defective in materials or workmanship for a period of two years from the date of purchase.

This warranty includes the cost of parts and labor, but you must pay transportation costs. Transportation within a fifteen mile radius of the servicing dealer is covered under this warranty for two-stage snowthrowers only.

This warranty applies to all gasoline powered snow products.

* Normal residential purposes means use of the product on the same lot as your home. Use at more than one location is considered commercial use, and the commercial use warranty would apply.

Limited Warranty for Commercial Use

Toro Consumer Products used for commercial, institutional, or rental use are warranted against defects in materials or workmanship for 45 days from the date of purchase.

Instructions for Obtaining Warranty Service

If you think that your Toro Product contains a defect in materials or workmanship, follow this procedure:

1. Contact any Toro Authorized or Master Service Dealer to arrange service at their dealership. To locate a dealer convenient to you, refer to the Yellow Pages of your telephone directory (look under “Lawn Mowers”) or access our website at www.Toro.com. U.S. Customers may also call 800-421-9684 to use our 24-hour Toro dealer locator system.
2. Bring the product and your proof of purchase (sales receipt) to the Service Dealer.

If for any reason you are dissatisfied with the Service Dealer’s analysis or with the assistance provided, contact us at:

Customer Care Department, Consumer Division
Toro Warranty Company
8111 Lyndale Avenue South
Bloomington, MN 55420-1196
800-348-2424 (U.S. customers)
877-484-9255 (Canada customers)

Owner Responsibilities

You must maintain your Toro Product by following the maintenance procedures described in the operator’s manual. Such routine maintenance, whether performed by a dealer or by you, is at your expense.

Items and Conditions Not Covered

There is no other express warranty except for special emission system coverage on some products and the Toro Starting Guarantee on GTS engines. This express warranty does not cover:

- Cost of regular maintenance service or parts, such as filters, fuel, lubricants, tune-up parts, blade sharpening, brake and clutch adjustments
- Any product or part which has been altered or misused or required replacement or repair due to normal wear, accidents, or lack of proper maintenance
- Repairs necessary due to improper fuel, contaminants in the fuel system, or failure to properly prepare the fuel system prior to any period of non-use over three months

All repairs covered by this warranty must be performed by an Authorized Toro Service Dealer using Toro approved replacement parts.

General Conditions

Repair by an Authorized Toro Service Dealer is your sole remedy under this warranty.

Neither The Toro Company nor Toro Warranty Company is liable for indirect, incidental or consequential damages in connection with the use of the Toro Products covered by this warranty, including any cost or expense of providing substitute equipment or service during reasonable periods of malfunction or non-use pending completion of repairs under this warranty.

Some states do not allow exclusions of incidental or consequential damages, or limitations on how long an implied warranty lasts, so the above exclusions and limitations may not apply to you.

This warranty gives you specific legal rights, and you may also have other rights which vary from state to state.

Countries Other than the United States or Canada

Customers who have purchased Toro products exported from the United States or Canada should contact their Toro Distributor (Dealer) to obtain guarantee policies for your country, province, or state. If for any reason you are dissatisfied with your Distributor’s service or have difficulty obtaining guarantee information, contact the Toro importer. If all other remedies fail, you may contact us at Toro Warranty Company.

Part No. 374-0011 Rev. A