FORM NO. 3311-221

TORO®

MODEL NO. 23370–800001 & UP

PARTS CATALOG

21" WHIRLWIND HEVI-DUTY H.P.

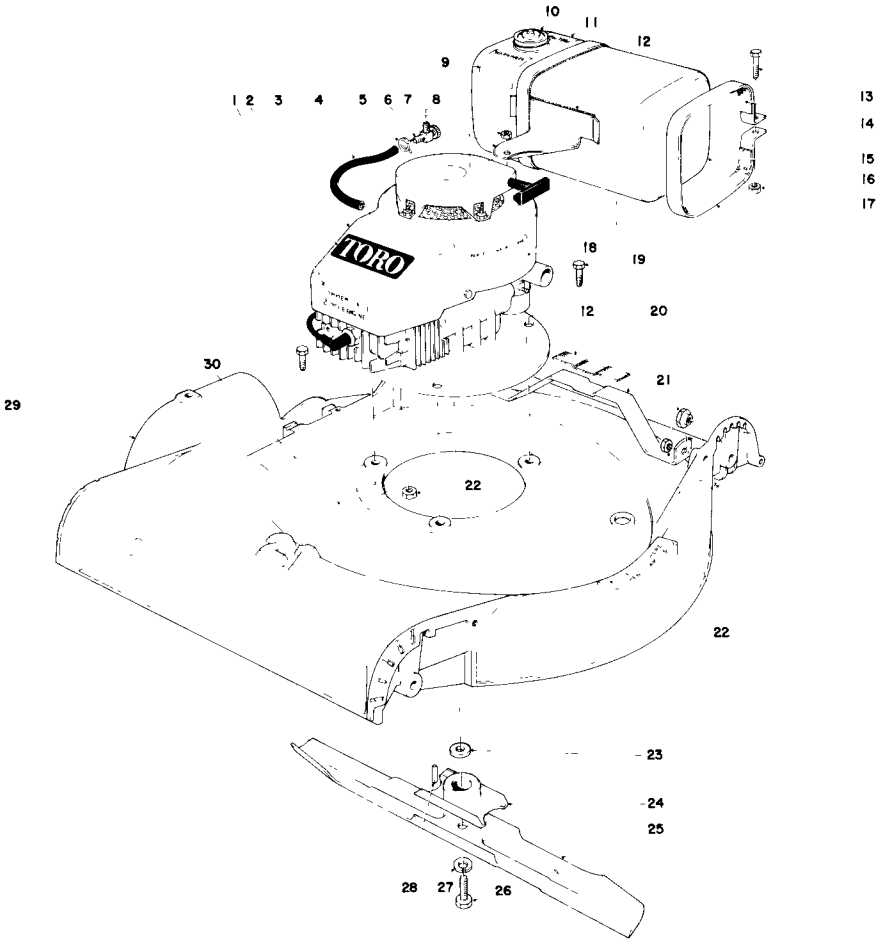

ENGINE ASSEMBLY

Ref. No.	Part No.	Description	No. Used
1	37-4560	Decal Commercial 2 Cycle Engine	1
2	23-0810	Decal Toro	1
3	221-598	Engine	1
4	36-8930	Gas Hose	1
5	2210-87	Clamp	2
6	304-71	Fuel Control Valve	1
7	36-8690	Bracket Tank Mounting	1
8	2210-216	Nut Recoil Mounting	1
9	2210-204	Decal – Warning 24:1	1
10	222-15	Cap	1
11	2210-206	Decal – Fuel Mix Chart	1
12	36-8970	Felt Strip Tank Support	2
13	321-8	Capscrew	2
14	36-8960	Felt Strip	2
15	222-14	Fuel Tank Assembly (Incl. Ref. #10)	1
16	32152-4	Locknut	2
17	36-8940	Tank Strap	1
18	37-1280	Decal Operating Instructions	1
19	322-5	Capscrew	3
20	36-8670	Tank Bracket	1
21	36-8770	Spacer	2
22	32152-1	Locknut	5
23	36-8760	Spacer Blade Retainer	1
24	36-8800	Blade Retainer	1
25	37-0090	Blade	1
26	3-5246	Screw Special	1
27	3253-22	Lockwasher	1
28	21-5070	Key Square	1
29	36-8920	Housing	1
30	36-8910	Exhaust Baffle	1

COPYRIGHT © ALL RIGHTS RESERVED
The Toro Company – 1978
MINNEAPOLIS, MN 55420 – U.S.A.

PRICE $1.00

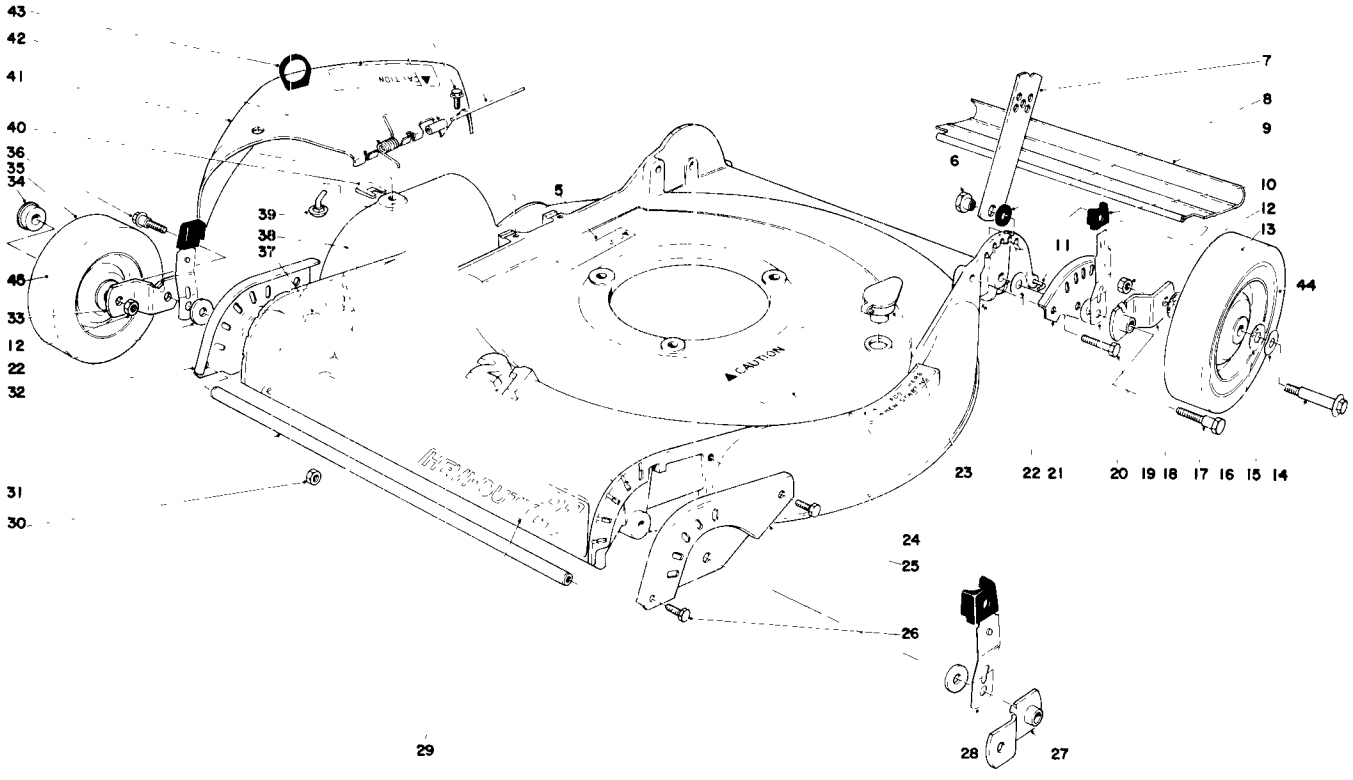

HOUSING ASSEMBLY

Ref. No.	Part No.	Description	No. Used
1	20-4330	Decal – Deflector Caution	1
2	28-3270	Sleeve Spring	1
3	12-3270	Screw Special	2
4	3-2644	Hinge Pin	1
5	3-7643	Decal Warning	1
6	27-6520	Pivot Nut	2
7	27-7080	Handle Latch	2
8	27-6510	Spacer Handle Latch	2
9	28-3780	Rear Safety Shield	1
10	25-7740	Knob Arm	4
11	33-3201	Rod Shield	1
12	32146-6	Locknut	4
13	36-8850	Wheel Assembly (Incl. Ref. #34 & 44)	2
14	3-2652	Wheel Bolt	4
15	3290-393	Wave Washer	4
16	26-7500	Felt Washer	8
17	28-8880	Pivot Screw	2
18	37-1160	Pivot Arm "B"	1
*	37-1180	Pivot Arm "A"	1
19	322-10	Capscrew	2
20	36-8890	Spring Arm Rear	2
21	36-8710	Wheel Quadrant L.H.	1
22	5-4460	Pivot Washer	6
23	6-4500	Washout Port	1

Ref. No.	Part No.	Description	No. Used
24	29-4720	Decal Safety Instructions	1
25	36-8700	Wheel Quadrant L.H.	1
26	32104-38	Screw Thread Cutting	4
27	36-8830	Pivot Arm "C"	1
28	36-8900	Spring Arm Assembly (Front)	2
29	26-7740	Decal Hevi-Duty 21	1
30	32146-5	Locknut	2
31	36-8810	Bumper	1
32	36-8680	Wheel Quadrant R.H.	1
*	36-8720	Wheel Quadrant R.H.	1
33	36-8820	Pivot Arm Assembly "D"	1
34	251-180	Bearing	8
35	36-8840	Wheel Assembly (Incl. Ref. #34 & 45)	2
36	25-3440	Pivot Screw	2
37	32104-114	Screw Thread Forming	2
38	12-2990	Safety Bar	1
39	28-3260	Pin Bag Chute	1
40	28-3250	Clip Bag Chute Pin	1
41	36-2970	Deflector	1
42	28-1560	Spring Torsion Deflector	1
43	28-1430	Lift Loop Deflector	1
44	36-8990	Tire	2
45	36-8980	Tire	2

*Not Illustrated

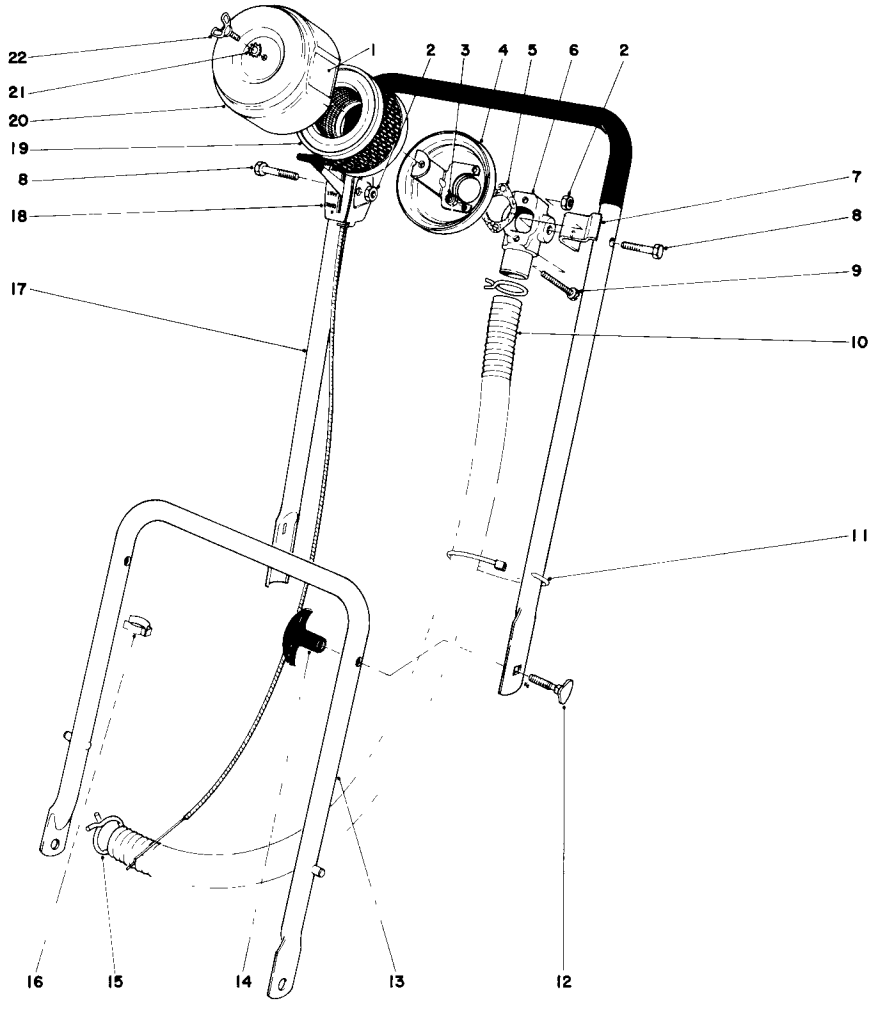

HANDLE ASSEMBLY

Ref. No.	Part No.	Description	No. Used
1†	550201	Air Cleaner Decal	1
2	32152-4	Locknut	2
3†	650457	Locknut	2
4†	450230	Air Cleaner Pan	1
5†	27272	Gasket	1
6†	32388	Elbow	1
7	36-8750	Support Air Cleaner	1
8	321-9	Capscrew	2
9	3290-423	Slotted Hex Hd. Machine Screw	2
10	37-0130	Air Cleaner Hose	1
11	3290-378	Cable Ty	2
12	6-6330	Handle Screw	2

Ref. No.	Part No.	Description	No. Used
13	27-7050	Lower Handle	1
14	233-41	Knob Handle	2
15	2412-69	Clamp	2
16	218-465	Clip	2
17	36-8880	Handle Upper	1
18	29-8610	Throttle Control	1
19†	450229	Air Cleaner Element	1
20†	450231	Air Cleaner Cover	1
21	3255-17	Lockwasher Ext. Tooth	1
22†	650715	Wing Screw	1
*	8-2259	Loose Parts Bag	1

*Not Illustrated
†Obtain from your local Tecumseh dealer.

ENGINE TECUMSEH MODEL NO. AV-600-660-31

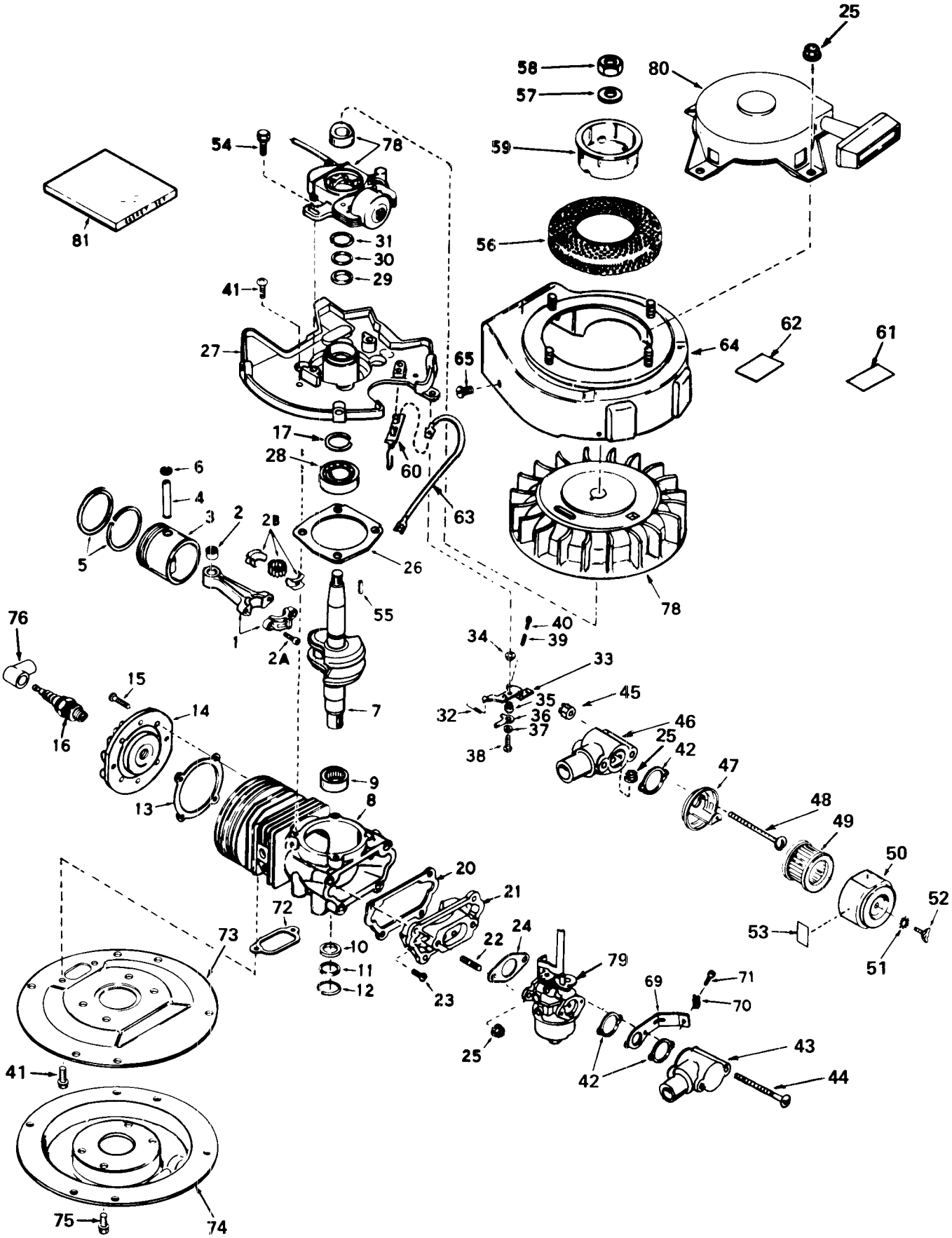

ENGINE TECUMSEH MODEL NO. AV-600-660-31

Ref. No.	Part No.	Description	No. Used
1	310246	Rod Assy., Connecting (Incl. Nos. 2, 2A & 2B)	1
2	530104A	Bearing, Cartridge	1
2A	650633	Screw, Connecting Rod	2
2B	530150	Bearing & Liner Set, Needle	1
3	310230A	Piston Assy. (Incl. Nos. 4, 5 & 6)	1
4	310178	Pin, Piston	1
5	310190	Ring Set, Piston	1
6	310167	Ring, Piston Pin Retaining	2
7	290496	Crankshaft	1
8	250263A	Block Assy., Cylinder (Incl. Nos. 9 thru 12)	1
9	530143A	Bearing, Needle	1
10	510145	Seal, Crankshaft	1
11	510143	Retainer, Crankshaft Seal	1
12	510142	Spring, Crankshaft Seal Retainer	1
13	*510274	Gasket, Cylinder Head	1
14	250240A	Head, Cylinder	1
15	650477	Screw, Pan Flex Hd.	6
16	34251	Resistor Spark Plug (RJ-17LM or equivalent)	1
17	570630	Ring, Retaining	1
20	*510282A	Gasket, Reed Plate	1
21	470149	Plate Assy., Reed (Incl. No. 22)	1
22	650700	Stud, Carburetor	2
23	650579	Screw, Pan Flex Hd.	4
24	*510110	Gasket, Carburetor	1
25	650457	Nut, Hex Whiz-Lock	6
26	*510292	Gasket, Housing Base	1
27	350388	Base Assy., Housing (Incl. Nos. 29, 30 & 31)	1
28	530110	Bearing, Ball	1
29	510105	Seal, Crankshaft	1
30	510106A	Retainer, Crankshaft Seal	1
31	510109A	Spring, Crankshaft Seal Retainer	1
32	570417	Spring, Governor	1
33	570421	Lever, Control	1
34	570422	Washer	1
35	570412	Spacer	1
36	570415	Lever, Adjustment	1
37	650583	Washer, Flat	1
38	650544	Screw, Pan Flex Hd.	1
39	31342	Spring	1
40	650549	Screw, Fol. Hd. Mach.	1

Ref. No.	Part No.	Description	No. Used
41	650497	Screw, Pan Flex Hd.	6
42	27272	Gasket, Air Cleaner	3
43	32389	Elbow, Carburetor	1
44	650605	Screw, Rd. Hd. Mach.	2
45	33450	Nut, Hex Lock	2
46	32388	Elbow, Air Cleaner	1
47	450230	Base Assy., Air Cleaner	1
48	29786	Screw, Rd. Hd. Mach.	2
49	450229	Filter, Air Cleaner	1
50	450231	Cover, Air Cleaner	1
51	650518	Washer, Lock	1
52	650715	Screw, Thumb	1
53	550201	Decal, Air Cleaner	1
54	650747	Screw, Hex Washer Hd.	2
55	610961	Key, Flywheel	1
56	590417	Screen, Air	1
57	650763	Washer, Belleville	1
58	650390	Nut, Flywheel	1
59	590416	Cup, Starter	1
60	610973	Terminal	1
61	550206	Decal, Warning	1
62	550208	Decal, Fuel Mix	1
63	610974	Wire, Ground	1
64	350393	Housing, Blower	1
65	650356	Screw, Hex Washer Hd.	4
69	570420	Bracket, Boden Wire	1
70	27793	Clip, Conduit	1
71	28942	Screw, Hex Hd. Sems	1
72	*510314	Gasket, Exhaust	1
73	330175	Ring, Adapter	1
74	390297	Muffler	1
75	650797	Screw, Flanged Hex Hd.	4
76	610118	Cover, Spark Plug	1
78	610794A	Magneto (The complete magneto is not available as an assembly. The magneto number is shown for reference purposes only. Order component parts individually, as shown in parts list.)	1
79	632074	Carburetor (Incl. No. 24)	1
80	590420	Starter, Rewind	1
81	510296B	Gasket Set (Incl. items marked *)	1

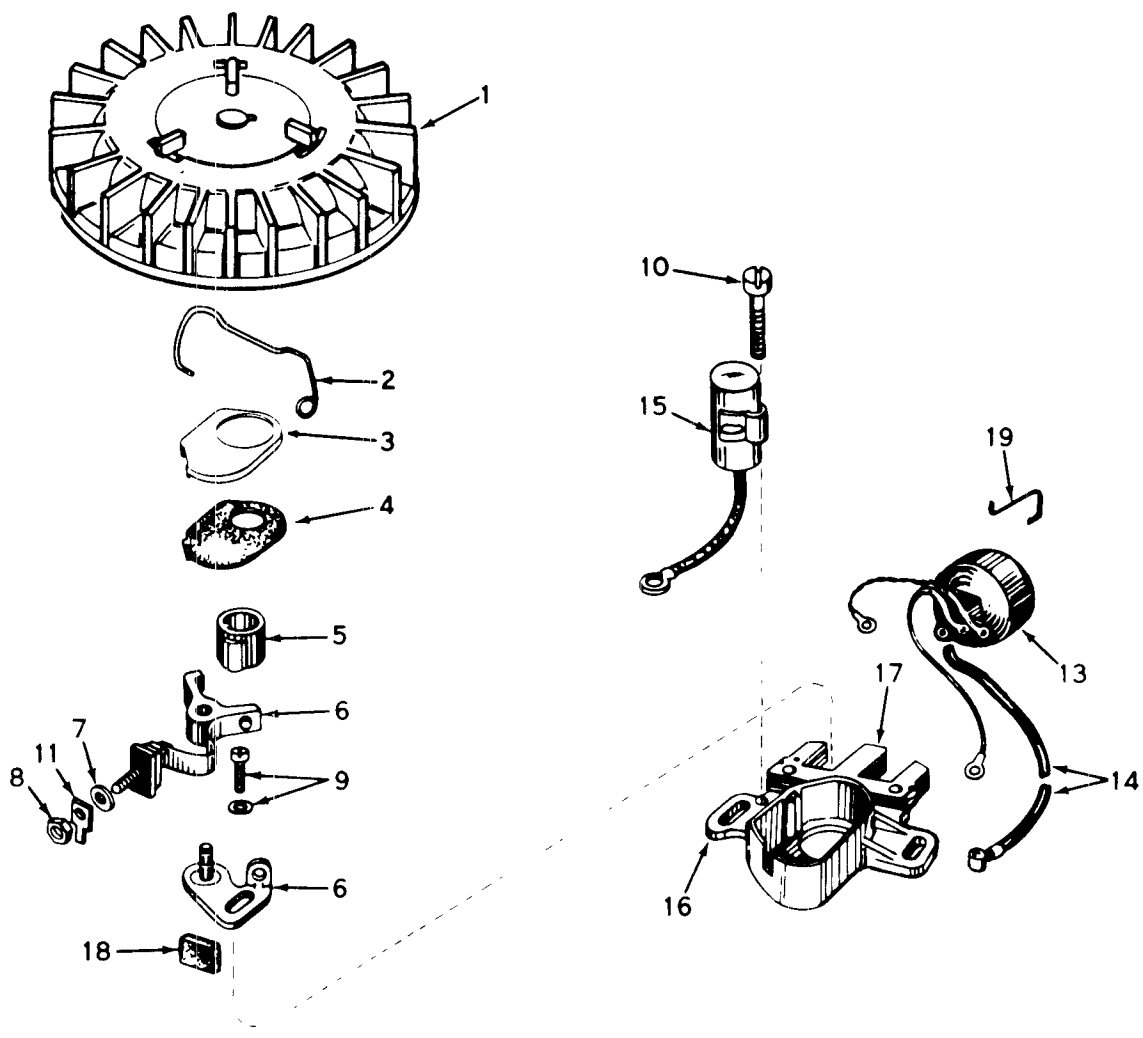

MAGNETO* NO. 610794A

Ref. No.	Part No.	Description	No. Used
1	610781A	Flywheel (Incl. Nos. 3 & 4)	1
2	30551	Spring, Breaker Box Dust Cover	1
3	610947	Cover, Breaker Box Dust	1
4	610948	Gasket, Dust Cover	1
5	30552	Cam, Breaker	1
6	30547A	Breaker Assembly	1
7	610385	Washer, Terminal	1
8	610408	Nut, Terminal	1
9	29181	Screw & Washer Assy., Breaker	1
10	610593	Screw, Condenser Fastening	1

Ref. No.	Part No.	Description	No. Used
11	33356	Tab, Ground Terminal	1
13	30560A	Coil Assembly (Incl. No. 14)	1
14	30554	Wire, Ignition Lead	1
15	30548A	Condenser	1
16	30545	Core & Plate Group	1
17	30561B	Stator Assembly (Incl. Nos. 2, 3, 4, 6 thru 11, 13, 15, 16, 18 & 19)	1
18	30549	Felt, Cam Wiper	1
19	31311	Clip, Coil Locking	1

*The complete magneto is not available as an assembly. The magneto number is shown for reference purposes only. Order component parts individually, as shown in parts list.

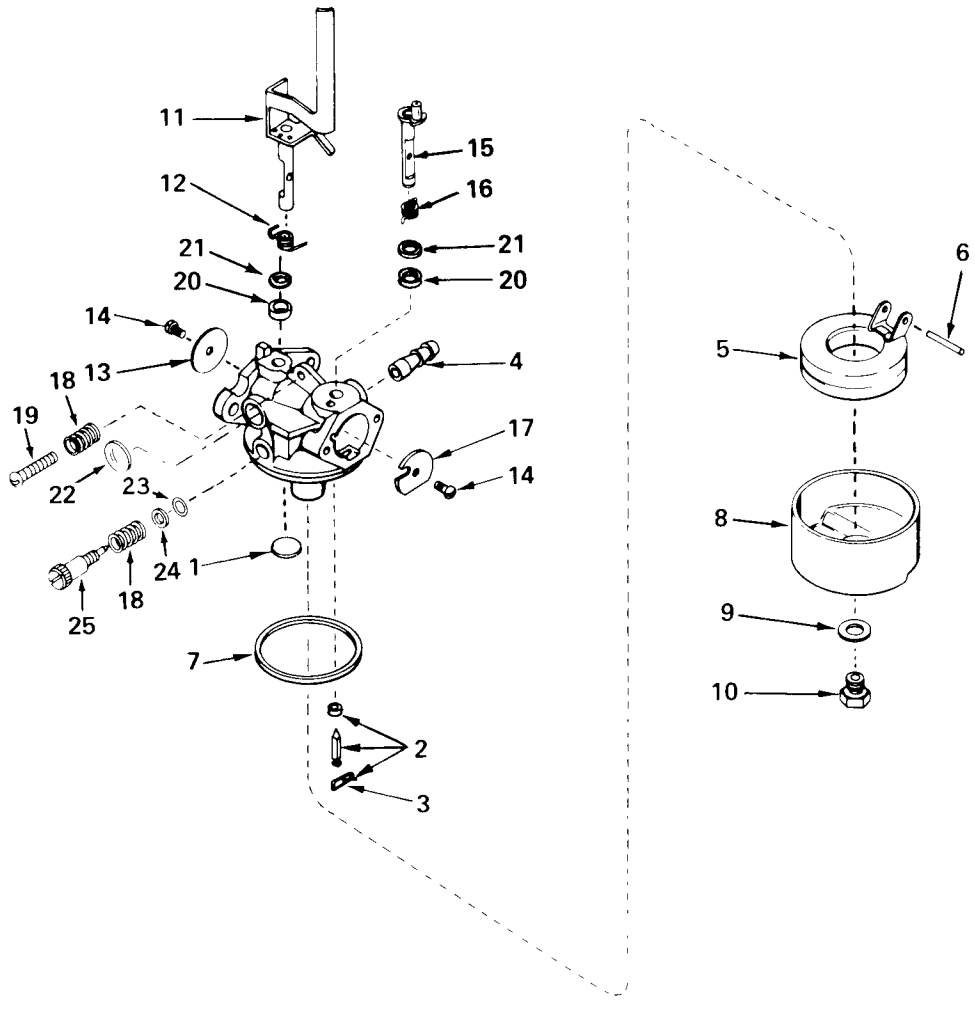

CARBURETOR NO. 632074

Ref. No.	Part No.	Description	No. Used
1	631027	Plug, Welch	1
2	631021	Inlet Needle, Seat & Clip Assy. (Incl. No. 3)	1
3	631022	Clip, Inlet Needle	1
4	631803	Fitting, Fuel Inlet	1
5	632019	Float, Carburetor	1
6	631024	Shaft, Float	1
7	631028	"O" Ring, Bowl-To-Body	1
8	631700	Bowl, Float	1
9	631334	Gasket, Bowl-To-Body	1
10	632073	Nut, Float Bowl	1
11	631255	Shaft & Lever Assy., Throttle	1
12	631767	Spring, Throttle Return	1

Ref. No.	Part No.	Description	No. Used
13	631036	Shutter, Throttle	1
14	650506	Screw, Rd. Washer Hd. Mach.	2
15	631302	Shaft & Lever Assy., Choke	1
16	631476	Spring, Choke Return	1
17	631890	Shutter, Choke	1
18	630766	Spring, Regulating Screw	2
19	650417	Screw, Idle Regulating	1
20	631183	Washer, Felt	2
21	631184	Washer, Steel	2
22	630748	Plug, Welch	1
23	630740	"O" Ring	1
24	630739	Washer	1
25	630898	Screw, Idle Adjustment	1

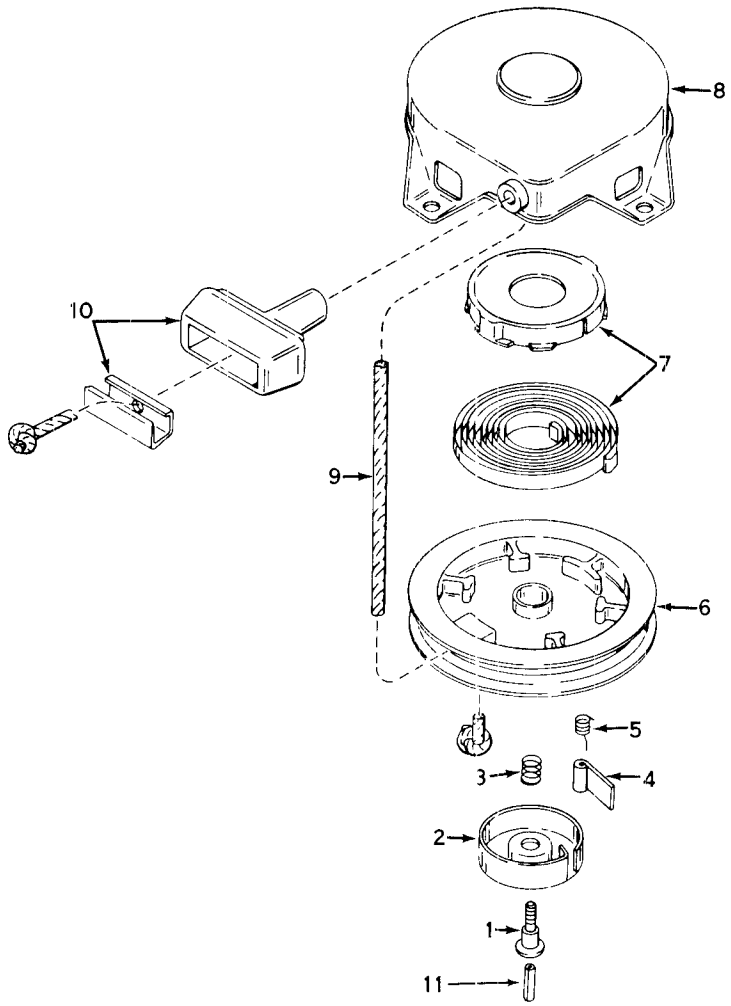

REWIND STARTER NO. 590420

Ref. No.	Part No.	Description	No. Used
1	590409A	Screw, Retainer	1
2	590410	Retainer, R.H.	1
3	590411	Spring, Brake	1
4	590148	Dog, Starter	1
5	590412	Spring, R.H. Dog	1
6	590413A	Pulley	1
7	590414	Spring & Keeper Assy.	1
8	590415	Housing Assy., Starter (Incl. No. 1)	1
9	590386	Rope, Starter	1
10	590387	Handle Assy., Starter	1
11	590459	Pin, Centering	1

The Toro Promise

A One Year Limited Warranty on Turf Products Other Than Walk Rotary Mowers

The Toro Company promises to repair any TORO Product if defective in materials or workmanship. The following time periods from the date of purchase apply

Turf Products	1 Year
Hevi-Duty Walk Rotary Mowers	90 Days

The costs of parts and labor are included, but the customer pays the transportation costs on walk rotary mowers.

Should you feel your TORO is defective and wish to rely on The Toro Promise, the following procedure is recommended:

1. Contact your Authorized TORO Distributor (the Yellow Pages of your telephone directory is a good reference source).

2. The TORO Distributor will advise you on the arrangements that can be made to inspect and repair your product.

3. The TORO Distributor will inspect the product and advise you whether the product is defective and, if so, make all repairs necessary to correct the defect without extra charge to you.

If for any reason you are dissatisfied with the distributor's analysis of the defect or the service performed, you may contact us.

Write.

TORO Turf Products Service Department
8111 Lyndale Avenue South
Minneapolis, Minnesota 55420

The above remedy of product defects through repair by an Authorized TORO Distributor is the purchaser's sole remedy for any defect.

THERE IS NO OTHER EXPRESS WARRANTY. ALL IMPLIED WARRANTIES OF MERCHANTABILITY AND FITNESS FOR USE ARE LIMITED TO THE DURATION OF THE EXPRESS WARRANTY.

Some states do not allow limitation on how long implied warranty lasts, so the above limitation may not apply to you.

This Warranty applies only to parts or components which are defective and does not cover repairs necessary due to normal wear, misuse, accidents, or lack of proper maintenance. Regular, routine maintenance of the unit to keep it in proper operating condition is the responsibility of the owner.

All warranty repairs reimbursable under The Toro Promise must be performed by an Authorized TORO Distributor using Toro approved replacement parts.

Repairs or attempted repairs by anyone other than an Authorized TORO Distributor are not reimbursable under The Toro Promise. In addition, these unauthorized repair attempts may result in additional malfunctions, the correction of which is not covered by warranty.

The Toro Company is not liable for indirect, incidental or consequential damages in connection with the use of the product including any cost or expense of providing substitute equipment or service during periods of malfunction or non-use.

Some states do not allow the exclusion of incidental or consequential damages, so the above exclusion may not apply to you.

This warranty gives you specific legal rights, and you may also have other rights which vary from state to state.

Compliance with Radio Interference Regulations Certified
Certifie Conforme au Reglement sur le Brouillage Radioelectrique.

PRODUCT CHANGES

In an effort to make improvements available to TORO owners as quickly as possible, minor changes are incorporated into Toro's products from time to time that do not become immediately shown in the Parts Catalog. If such a change apparently has been made in your unit, which is not reflected in your manual, see your TORO Distributor or his Authorized TORO Service Dealer for information and part numbers.

IDENTIFICATION AND ORDERING

Model and Serial Numbers

The Mower has two identification numbers: a model number and a serial number. The two numbers are stamped on a decal which is located on the mower housing between the rear wheels. In any correspondence concerning the mower, supply model and serial numbers to assure that correct information and replacement parts are obtained.

To order replacement parts from an Authorized TORO Service Dealer, supply the following information.

1. Model and serial numbers of the mower.

2. Part number, description, and quantity of part(s) desired.

NOTE: Do not order by reference number if a parts catalog is being used; use the PART NUMBER.

Keep Your TORO All Toro Genuine TORO PARTS & ACCESSORIES ***Insist on Genuine Toro Parts***

MAINTENANCE RECORD

Date	Hours Used	Air Cleaner Service	Lubrication	Winter Storage	Spring Service	Spark Plug Gap

MAINTENANCE RECORD

Date	Hours Used	Air Cleaner Service	Lubrication	Winter Storage	Spring Service	Spark Plug Gap

MAINTENANCE RECORD

Date	Hours Used	Air Cleaner Service	Lubrication	Winter Storage	Spring Service	Spark Plug Gap