Form No. 3451-600 Rev A

Brake and Signal LED Light Kit

Serial number 410500000 and After Workman® HD Utility Vehicle

Model No. 145-2296

Installation Instructions

Installation

Loose Parts

Use the chart below to verify that all parts have been shipped.

Procedure	Description	Qty.	Use
1	No parts required	–	Prepare a machine.
2	No parts required	–	Remove the hood.
3	Front turn signal light Phillips head bolt (#10 x 1–1/4 inches) Flange nut (#10)	2 4 4	Install the front turn signal lights.
4	Flasher relay Hex washer head bolt (1/4 x 5/8 inch)	1 1	Install the flasher relay.
5	Hazard switch Turn signal switch	1 1	Install the turn signal switch and hazard switch.
6	No parts required	–	Install the hood.
7	No parts required	–	Connect the battery.
8	No parts required	–	Test the lights.

1

Preparing a Machine

No Parts Required

Procedure

1. Park a machine on a level surface.
2. Engage the parking brake.
3. Shut off the engine and remove the key.
4. Disconnect the battery; refer to your *Operator's Manual*.

© 2022—The Toro® Company
8111 Lyndale Avenue South
Bloomington, MN 55420

Register at www.Toro.com.

Original Instructions (EN)
Printed in the USA
All Rights Reserved

3451-600

2

Removing the Hood

No Parts Required

Procedure

1. While grasping the hood in the headlight openings, lift up the hood to release the lower mounting tabs from the frame slots (Figure 1).

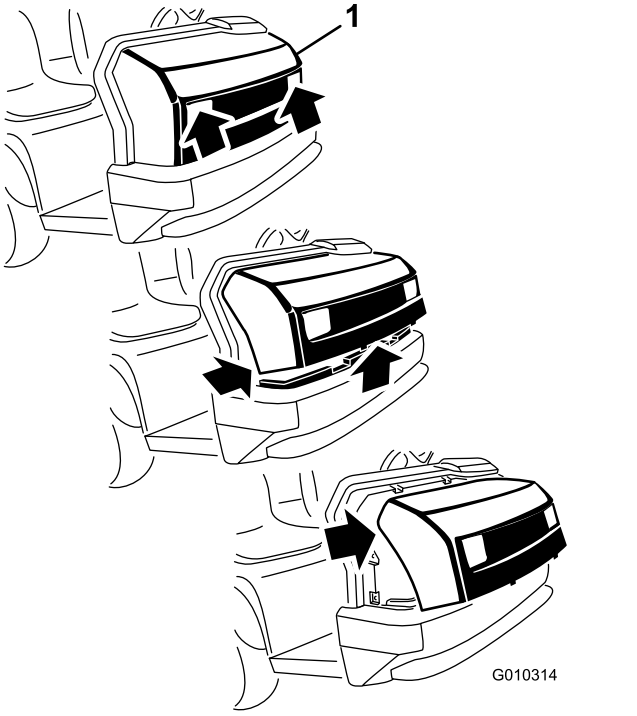

Figure 1

1. Hood

2. Pivot the bottom of the hood upward until you can pull the top mounting tabs from the frame slots (Figure 1).
3. Pivot the top of the hood forward and unplug the wire connectors from the headlights (Figure 1).
4. Remove the hood.

3

Installing the Front Turn Signal Lights

Parts needed for this procedure:

2	Front turn signal light
4	Phillips head bolt (#10 x 1–1/4 inches)
4	Flange nut (#10)

Procedure

1. On the inside of the hood, locate the 3 dots under each headlight and find the center dot as illustrated in Figure 2.

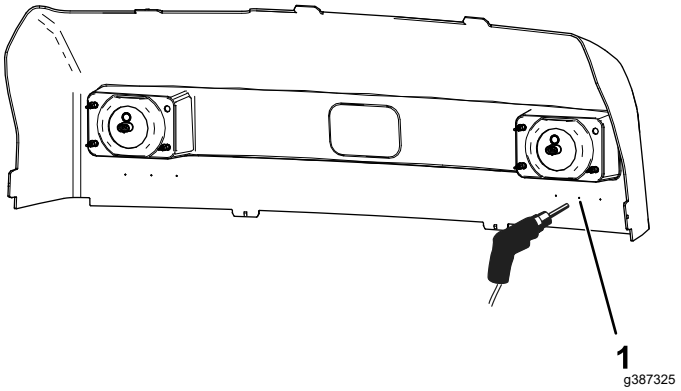

Figure 2

1. Center dot

2. Using the measurements shown in Figure 3 and the center dot as a reference, drill 3 holes in the following order:

   Note: Use only the center dot as a reference. Ignore the 2 outer dots.

   A. Drill 2 outer holes (6 mm or 1/4 inch diameter) in the outer positions.

   B. Drill a center hole (32 mm or 1–1/4 inches diameter) in the center position.

      Important: **Ensure that the 2 outer holes are symmetrical to the center hole (Figure 3).**

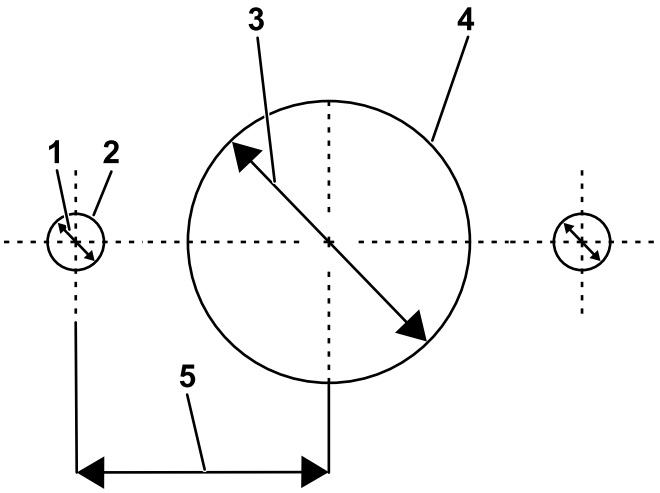

g387277

Figure 3

1. 6 mm (1/4 inch) diameter
2. Outer hole
3. 32 mm (1–1/4 inches) diameter
4. Center hole
5. 28 mm (1–1/8 inches)

3. Secure a front turn signal light to the hood at each location with the amber lens to the outside, as follows:

   A. Insert 2 Phillips head bolts through the light and into the 6 mm (1/4 inch) diameter outer holes in the hood (Figure 4).

      Note: Orient the lights with the amber lens outward.

   B. Secure the bolts using the flange nuts (Figure 4).

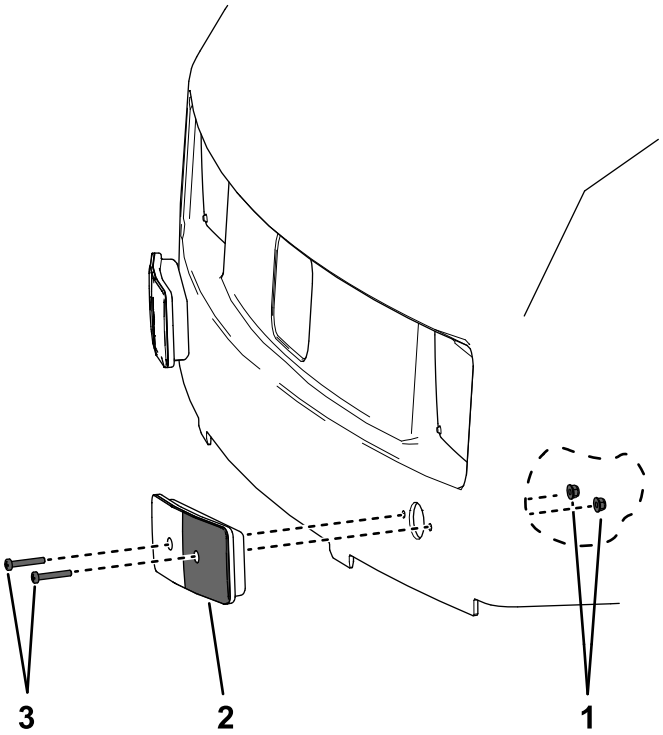

g387336

Figure 4

1. Flange nut
2. Front turn signal light
3. Phillips head bolt

4. Repeat steps 1 through 4 under the other headlight.

4

Installing the Flasher Relay

Parts needed for this procedure:

1	Flasher relay
1	Hex washer head bolt (1/4 x 5/8 inch)

Procedure

1. At the dash-support tube of the machine (Figure 5), secure the flasher relay to the dash-support tube using the hex bolt (Figure 6).

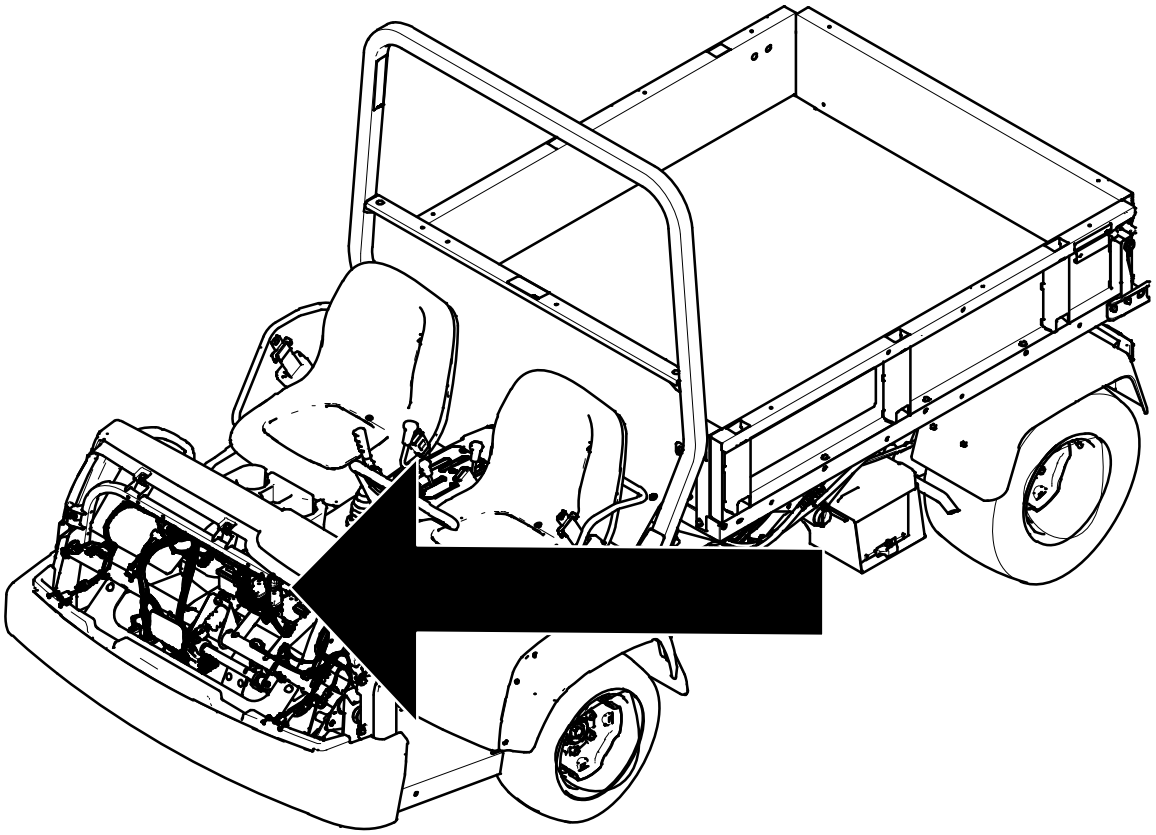

g387635

Figure 5

2. Locate the connector of the wire harness for the machine labeled SIGNAL MODULE and plug the connector into the flasher relay (Figure 6).

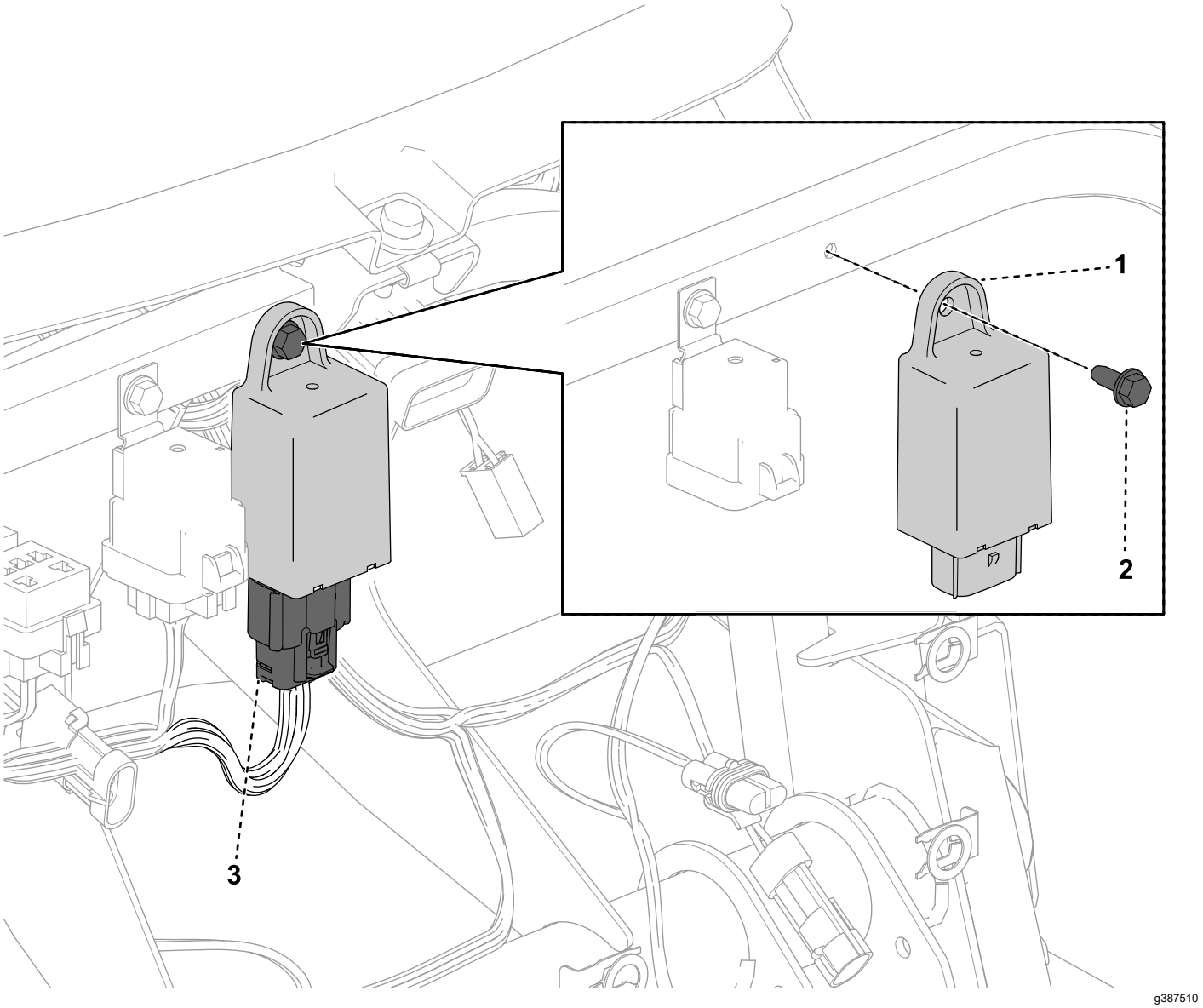

Figure 6

1. Flasher relay
2. Hex bolt
3. Connector

5

Installing the Hazard Switch and Turn Signal Switch

Parts needed for this procedure:

1	Hazard switch
1	Turn signal switch

Procedure

1. From behind the dash, cut 2 holes into the decal as shown in Figure 7.

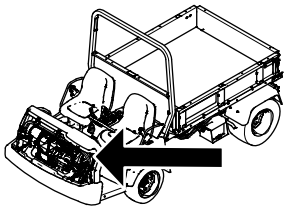

g387638

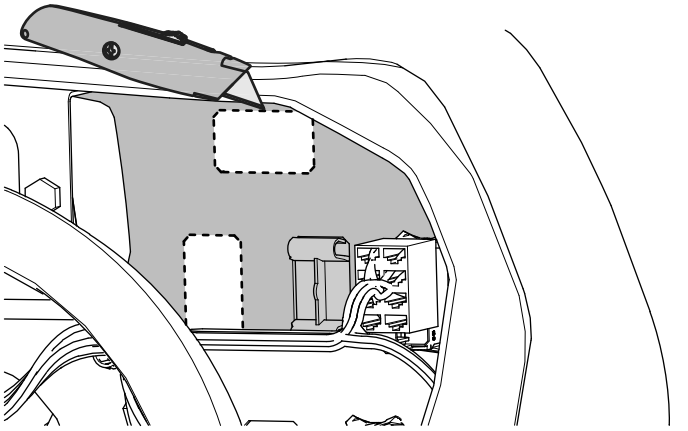

g387637

Figure 7

2. Insert the hazard switch and turn signal switch into the dash panel holes until they snap into place as shown in Figure 8.

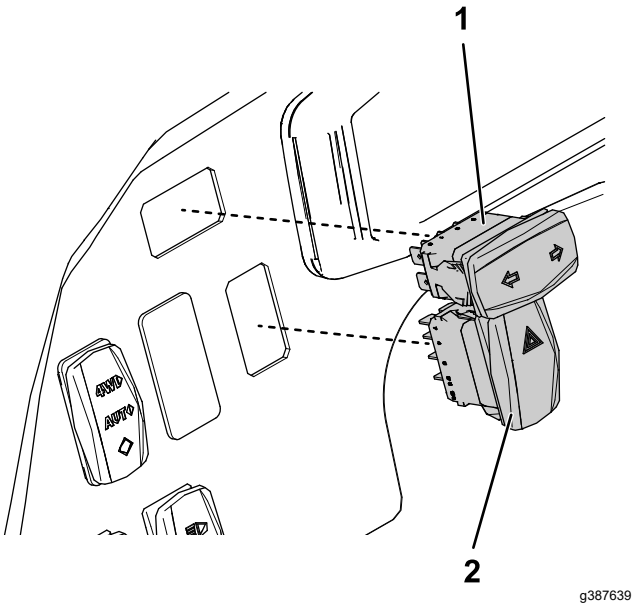

g387639

Figure 8

1. Turn signal switch
2. Hazard switch

3. Locate the wire harness with the connectors labeled HAZARDS SWITCH and TURN SIGNAL SWITCH.
4. Plug the connectors into the hazard switch and turn signal switch.

6

Installing the Hood

No Parts Required

Procedure

1. Align the hood to the front of the machine (Figure 1).
2. Pivot the hood forward and connect the headlights to the wire harness connectors labeled LEFT HEADLIGHT and RIGHT HEADLIGHT and connect the hazard and turn signal lights to the wire harness connectors labeled LEFT FRONT LIGHT and RIGHT FRONT LIGHT.
3. Pivot the hood back and insert the mounting tabs at the top of the hood into the slots in the dash panel of the machine (Figure 1).
4. Pivot the hood down and insert the tabs at the bottom of the hood into the slots in the bumper (Figure 1).

7

Connecting the Battery

No Parts Required

Procedure

Connect the battery; refer to your *Operator's Manual*.

8

Testing the Lights

No Parts Required

Procedure

Note: Get someone to help you see the lights as you test them.

1. Sit in the operator's seat and turn on the machine.
2. Press the hazard light switch.

   Note: The hazard lights should illuminate.
3. Move the turn signal to the left and right positions.

   Note: The position lights should flash at the front of the machine and the taillight should flash at the back of the machine.
4. Turn off the machine and remove the key.



Count on it.