Form No. 3376-520 Rev D

TORO®

Count on it.

Parts Catalog

# Groundsmaster® 4300-D T4 Traction Unit

**Model No. 30864—Serial No. 313000001 and Up**

**Model No. 30864A—Serial No. 314000001 and Up**

Register at www.Toro.com.
Original Instructions (EN)

CE

*3376-520* D

# Ordering Replacement Parts

To order replacement parts, please supply the part number, the quantity, and the description of each part desired.

### Understanding Reference Numbers

Each identified part in an illustration has a reference number. The reference number for a part also appears in the parts list, along with other information about the part.

This catalog uses two special reference number formats, one to indicate parts in a service assembly and another to indicate the quantity of a given part in an illustration.

### Service Assembly Reference Numbers

Parts in service assemblies have reference numbers in the form a:b. The a represents the reference number of the entire service assembly and the b represents a sequential number unique to each part within the service assembly.

For example, a wheel assembly might be identified by reference number 6, the tire by 6:1, the valve by 6:2, and the wheel by 6:3. When you order the assembly identified by reference number 6, you receive all parts identified by reference numbers 6:1,6:2, and 6:3. However, you may also order any part individually. Reference numbers of this type appear in illustration and in parts lists.

### Reference Numbers Indicating Quantity

In an illustration, if a reference number indicates more than one part, the reference number has the form nX y. The n represents the quantity of the part, the X is the multiplication symbol, and the y represents the reference number.

For example, in an illustration, the reference number 2X 37 means that two of the parts identified by reference number 37 are indicated.

# Contents


Frame Assembly . . . 5
Operator Platform Assembly . . . 6
Pedal Assembly . . . 7
Steering Assembly . . . 9
Steering Tilt Column Assembly No. 106-3622 . . . 10
Steering Valve Assembly No. 106-3621 . . . 11
Control Arm Assembly . . . 12
Joystick Bracket Assembly No. 120-5280 . . . 14
Front Axle Assembly . . . 15
LH Brake Assembly No. 120-6261 . . . 16
RH Brake Assembly No. 120-6260 . . . 17
Rear Axle Assembly . . . 18
Tie Rod Assembly No. 110-5334-03 . . . 19
No. 1, 4 and 5 Deck and Lift Arm Assembly . . . 20
No. 2 and 3 Deck and Lift Arm Assembly . . . 22
Roller and Carrier Frame . . . 23
Roller Assembly No. 108-7387 . . . 24
Height-of-Cut Assembly . . . 25
Spindle, Blade and Chamber Assembly . . . 26
Spindle Assembly No. 115-3435 . . . 27
Seat and Control Arm Wiring Harness Assembly . . . 28
Main Wiring Harness Assembly . . . 29
Engine Wiring Harness and Battery Assembly . . . 30
Gear Pump Mounting Assembly . . . 31
Gear Pump Assembly No. 108-4003 . . . 32
Seat Base Assembly . . . 33
Hood Assembly . . . 34
Radiator and Shroud Assembly . . . 35
Hydraulic Tank Assembly . . . 36
Fuel System Assembly . . . 37
Seat Mount Assembly . . . 38
Mechanical Seat Suspension Assembly No. 110-8851 . . . 39
Traction Pump Assembly . . . 40
Hydraulic Pump Assembly No. 119-6972 . . . 41
Front Traction Hydraulic Circuit . . . 43
Hydraulic Motor Assembly No. 120-6264 (CCW) . . . 44
Hydraulic Motor Assembly No. 120-6265 (CW) . . . 45
Rear Traction Hydraulic Circuit . . . 46
Hydraulic Motor Asembly No. 107-4544 . . . 47
Hydraulic Motor Assembly No. 110-0901 . . . 48
Four Wheel Drive Manifold Assembly No. 108-1825 . . . 49
Deck No. 1, 4 and 5 Hydraulic Circuit Assembly . . . 50
Gear Motor Assembly No. 108-4004 . . . 52
Deck Control Manifold Assembly No. 114-0359 . . . 53
Deck No. 2 and 3 Hydraulic Circuit Assembly . . . 54
Deck No. 1, 4 and 5 Lift Circuit Hydraulic Assembly . . . 56
Lift Control Manifold Assembly No. 117-0158 . . . 57
Hydraulic Cylinder Assembly No. 119-6989 . . . 58
Hydraulic Cylinder Assembly No. 119-6990 . . . 59
Hydraulic Cylinder Assembly No. 119-6991 . . . 60
Deck No. 2 and 3 Lift Circuit Hydraulic Assembly . . . 61
Hydraulic Cylinder Assembly No. 119-6988 . . . 62
Steering Hydraulic Assembly . . . 63
Hydraulic Cylinder Assembly No. 114-0403 . . . 65



**© 2021—The Toro® Company**


**8111 Lyndale Avenue South**
**Bloomington, MN 55420**





**Contact us at www.Toro.com.**
**Printed in the USA.**


**All Rights Reserved**

# Contents (continued)

Engine, Driveshaft and Air Cleaner Assembly . . . 66
Air Cleaner Assembly No. 98-4517 . . . 68
Drive Shaft Assembly No. 120-3756 . . . 69
Cylinder Block Assembly . . . 70
Gear Housing Assembly . . . 71
Flywheel Housing and Oil Sump Assembly . . . 72
Suction Manifold Assembly . . . 73
Cylinder Head and Cover Assembly . . . 74
Exhaust Manifold Assembly . . . 76
Camshaft and Driving Gear Assembly . . . 77
Diesel Particulate Filter Assembly . . . 78
Turbine Assembly . . . 80
Crankshaft and Piston Assembly . . . 81
Lubrication and Oil System Assembly . . . 82
Lubrication Oil Line Assembly . . . 83
Cooling Water System Assembly . . . 84
Fuel System Assembly . . . 85
Fuel Injection Valve Assembly . . . 86
Fuel Line Assembly . . . 87
Starting Motor Assembly . . . 88
Generator Assembly . . . 89
Electronic Control Unit Assembly . . . 90
Electric Parts Assembly . . . 91
Gasket Set . . . 92
Attachments and Accessories . . . 94

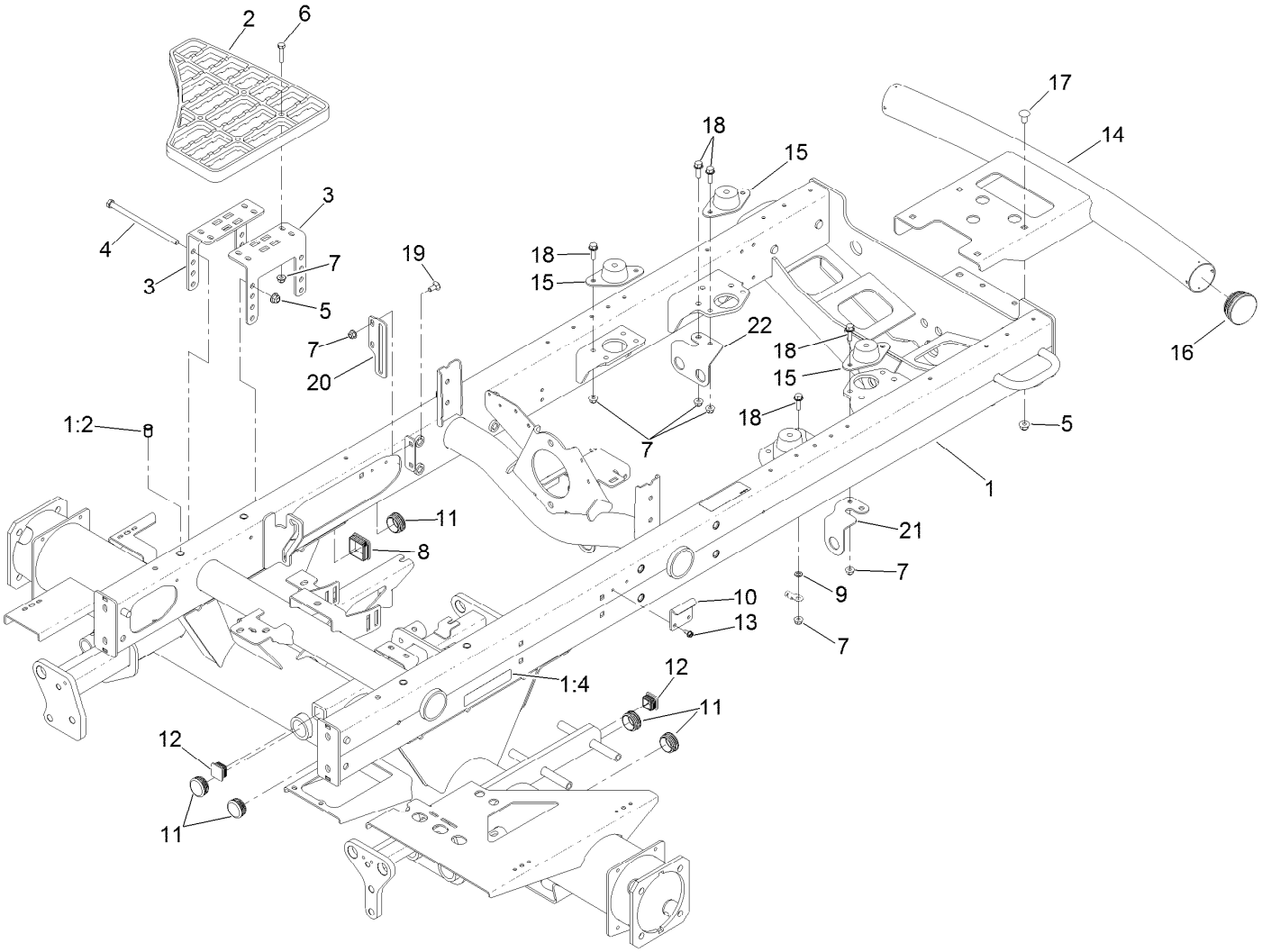


# Frame Assembly

| Ref. | Part Number | Qty. | Description |
|---|---|---|---|
| 1 | 120-3809 | 1 | Frame ASM |
| 1:2 | 32148-7 | 4 | Nut-Clinch |
| 1:4 | 93-6689 | 2 | Decal-No Riders |
| 2 | 110-9041 | 2 | Step-Aluminum |
| 3 | 117-5161-01 | 4 | Bracket-Step |
| 4 | 323-36 | 4 | Screw-HH |
| 5 | 104-8301 | 8 | Nut-HF, NI |
| 6 | 322-17 | 8 | Screw-HH |
| 7 | 104-8300 | 20 | Nut-HF, NI |
| 8 | 95-9495 | 1 | Cap |
| 9 | 3255-8 | 1 | Washer-Lock |
| 10 | 110-8972 | 1 | Hook-Latch |

| Ref. | Part Number | Qty. | Description |
|---|---|---|---|
| 11 | 110-9012 | 5 | Caplug |
| 12 | 110-9013 | 2 | Caplug |
| 13 | 32104-17 | 2 | Screw-HWH |
| 14 | 110-8951-03 | 1 | Bumper |
| 15 | 120-6274 | 4 | Mount-Engine |
| 16 | 2410-42 | 2 | Cap-End |
| 17 | 3231-21 | 4 | Screw-CARR |
| 18 | 3234-29 | 10 | Screw-HHF |
| 19 | 3230-1 | 2 | Bolt-CARR |
| 20 | 108-7584-01 | 1 | Plate-Guide, Rod |
| 21 | 117-0155 | 1 | Bracket-4Wd, LH |
| 22 | 117-0154 | 1 | Bracket-4Wd, RH |

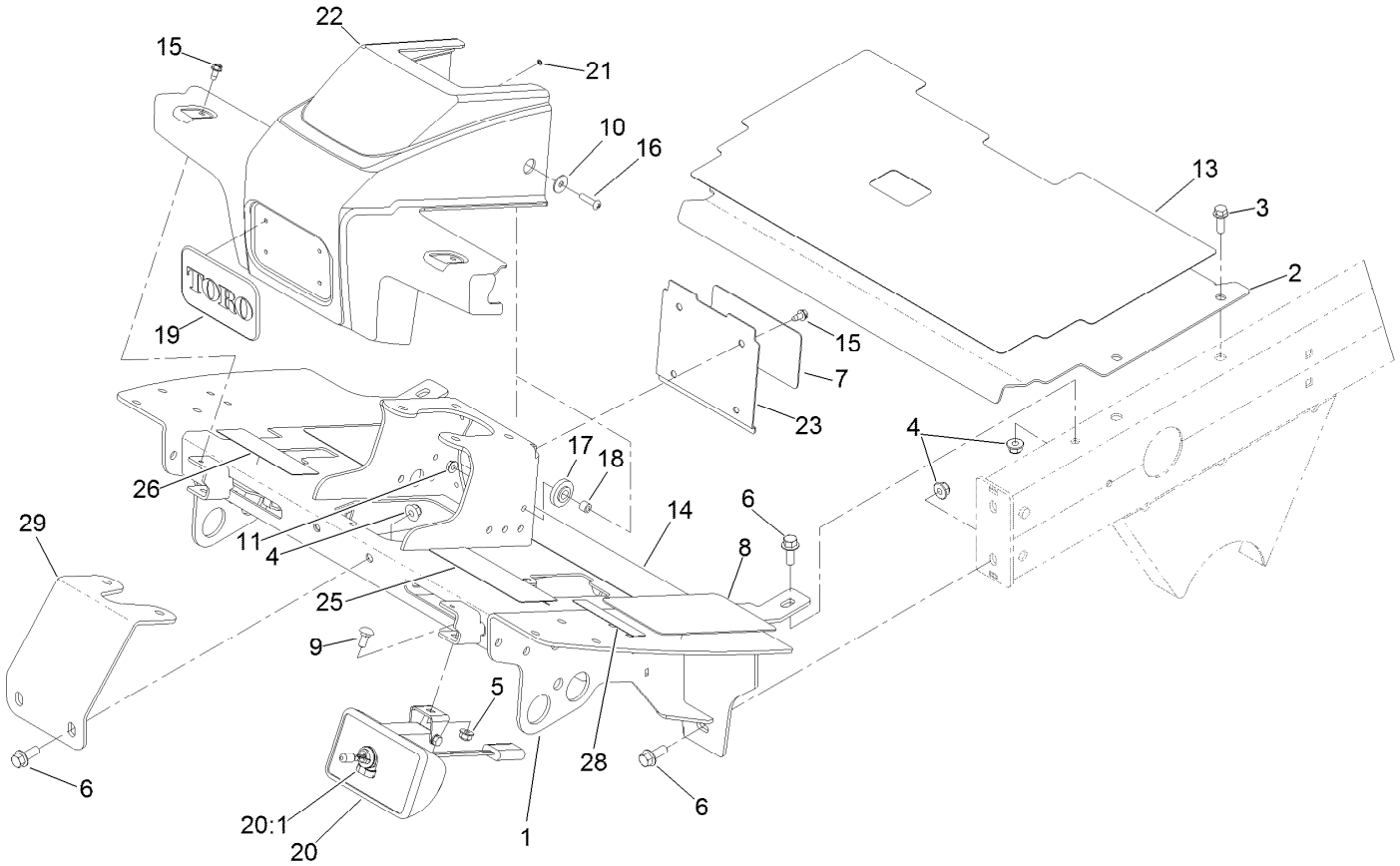


# Operator Platform Assembly

| Ref. | Part Number | Qty. | Description |
|---|---|---|---|
| 1 | 117-0161-01 | 1 | Platform |
| 2 | 115-8064-01 | 1 | Plate-Floor |
| 3 | 3234-17 | 4 | Screw-HHF |
| 4 | 104-8301 | 6 | Nut-HF, NI |
| 5 | 104-8300 | 2 | Nut-HF, NI |
| 6 | 3234-11 | 6 | Screw-HHF |
| 7 | 110-0986 | 1 | Decal-Plate, Cover |
| 8 | 125-2910 | 2 | Tread-Floor, Side |
| 9 | 3230-1 | 2 | Bolt-CARR |
| 10 | 87-6630 | 2 | Washer-Plain |
| 11 | 32128-33 | 2 | Nut-HF |
| 13 | 125-2911 | 1 | Tread-Panel, Service |
| 14 | 125-2909 | 1 | Tread-Floorboard |
| 15 | 32104-17 | 6 | Screw-HWH |

| Ref. | Part Number | Qty. | Description |
|---|---|---|---|
| 16 | 106-9518 | 2 | Screw-PRH |
| 17 | 240-11 | 2 | Bushing-Flange |
| 18 | 66-8010 | 2 | Spacer |
| 19 | 93-6028 | 1 | Plate-Logo |
| 20 | 94-9024 | 2 | Lamp ASM |
| 20:1 | 95-0909 | 1 | Lamp-12 Volt |
| 21 | 3254-9 | 4 | Washer-Lock, Internal |
| 22 | 110-0944 | 1 | Shroud-Platform |
| 23 | 110-0947-03 | 1 | Plate-Cover |
| 25 | 110-8869 | 1 | Decal-Danger |
| 26 | 110-8921 | 1 | Decal-Speed, Mow |
| 28 | 117-2718 | 1 | Decal-Arrester, Spark |
| 29 | 110-8876-01 | 1 | Brace-Column |

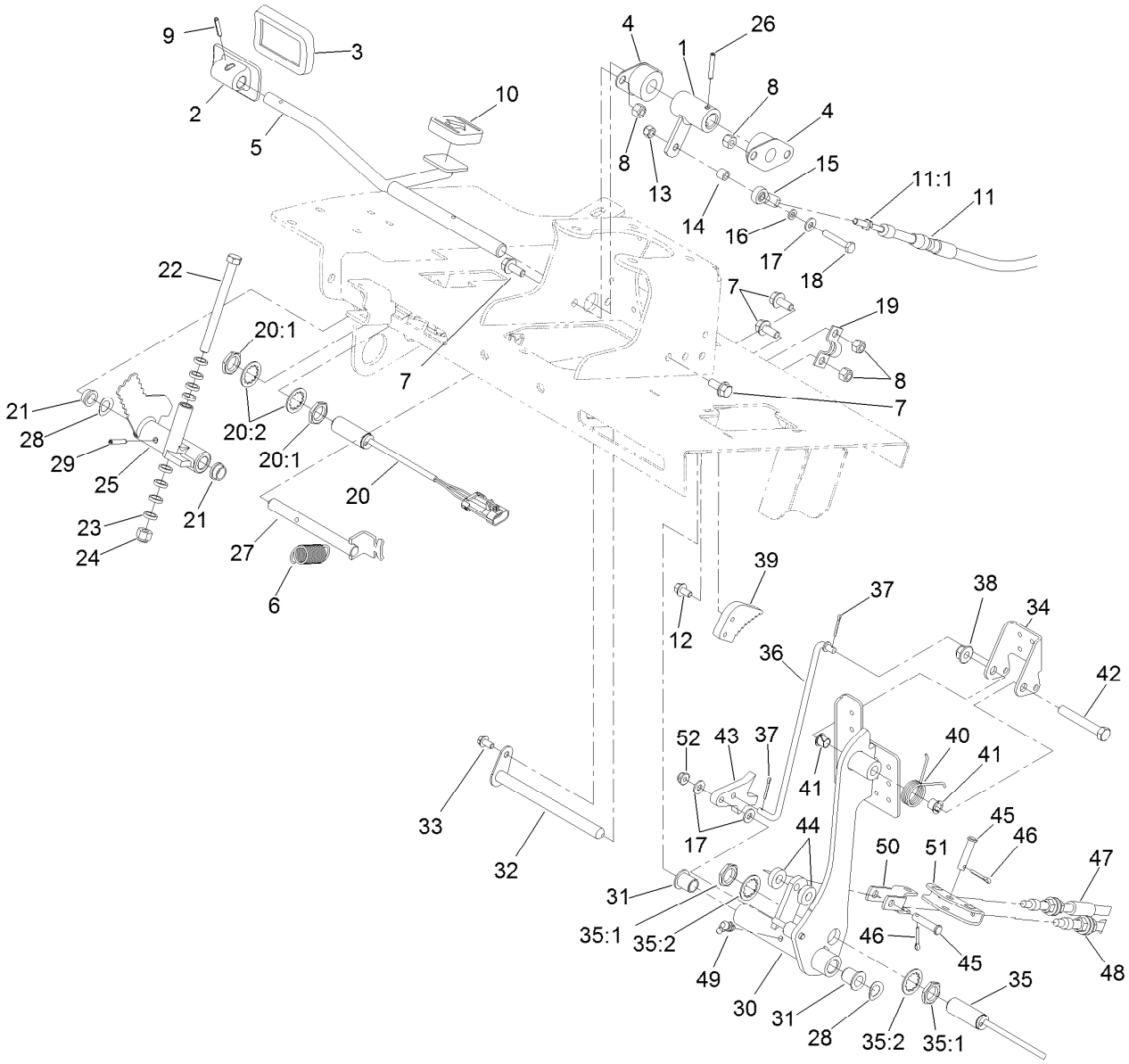


# Pedal Assembly

| Ref. | Part Number | Qty. | Description |
|---|---|---|---|
| 1 | 117-5199 | 1 | Hub-Pedal, Traction |
| 2 | 117-9507 | 1 | Pedal-Accelerator |
| 3 | 74-9100 | 1 | Pad-Pedal, Forward |
| 4 | 256-236 | 2 | Bearing-Mount, Flange |
| 5 | 106-3840 | 1 | Pedal-Traction |
| 6 | 92-7305 | 1 | Spring-Extension |
| 7 | 3234-5 | 6 | Screw-HHF |
| 8 | 3296-29 | 6 | Nut-Lock, NI |
| 9 | 32121-45 | 1 | Pin-Spring |
| 10 | 74-9110 | 1 | Pad-Pedal, Reverse |
| 11 | 107-2084 | 1 | Traction Cable ASM |
| 11:1 | 3220-1 | 2 | Nut-Jam |
| 12 | 3234-13 | 2 | Screw-HHF |
| 13 | 3296-42 | 1 | Nut-Lock, NI |
| 14 | 66-8010 | 1 | Spacer |
| 15 | 2411-41 | 1 | Rod End-Ball Joint |
| 16 | 33093-00 | 1 | Washer-Flat |
| 17 | 3256-22 | 3 | Washer-Flat |
| 18 | 321-9 | 1 | Screw-HH |
| 19 | 93-2092 | 1 | Clamp-Cable |
| 20 | 115-0282 | 1 | Proximity Sensor ASM |

| Ref. | Part Number | Qty. | Description |
|---|---|---|---|
| 20:1 | 117-3207 | 2 | Nut-Hex |
| 20:2 | 117-3208 | 2 | Washer-Lock, Internal Tooth |
| 21 | 256-156 | 2 | Bushing-Flange |
| 22 | 323-17 | 1 | Screw-HH |
| 23 | 62-4420 | 8 | Washer |
| 24 | 3296-39 | 1 | Nut-Lock, NI |
| 25 | 117-8066 | 1 | Mow-Stop |
| 26 | 32121-6 | 1 | Pin-Roll, Slotted |
| 27 | 106-3731 | 1 | Rod-Pivot |
| 28 | 110-8982 | 2 | Washer-Spring |
| 29 | 32121-16 | 1 | Pin-Spring |
| 30 | 115-0120-03 | 1 | Pedal-Brake |
| 31 | 256-155 | 2 | Bushing-Flange |
| 32 | 104-7179 | 1 | Pivot-Pedal |
| 33 | 32144-4 | 1 | Screw-HWH |
| 34 | 99-7963-03 | 1 | Pedal-Park |
| 35 | 115-5300 | 1 | Proximity Switch ASM |
| 35:1 | 117-3207 | 2 | Nut-Hex |
| 35:2 | 117-3208 | 2 | Washer-Lock, Internal Tooth |
| 36 | 115-0129 | 1 | Rod-Pawl, Brake |
| 37 | 3272-6 | 2 | Pin-Cotter |

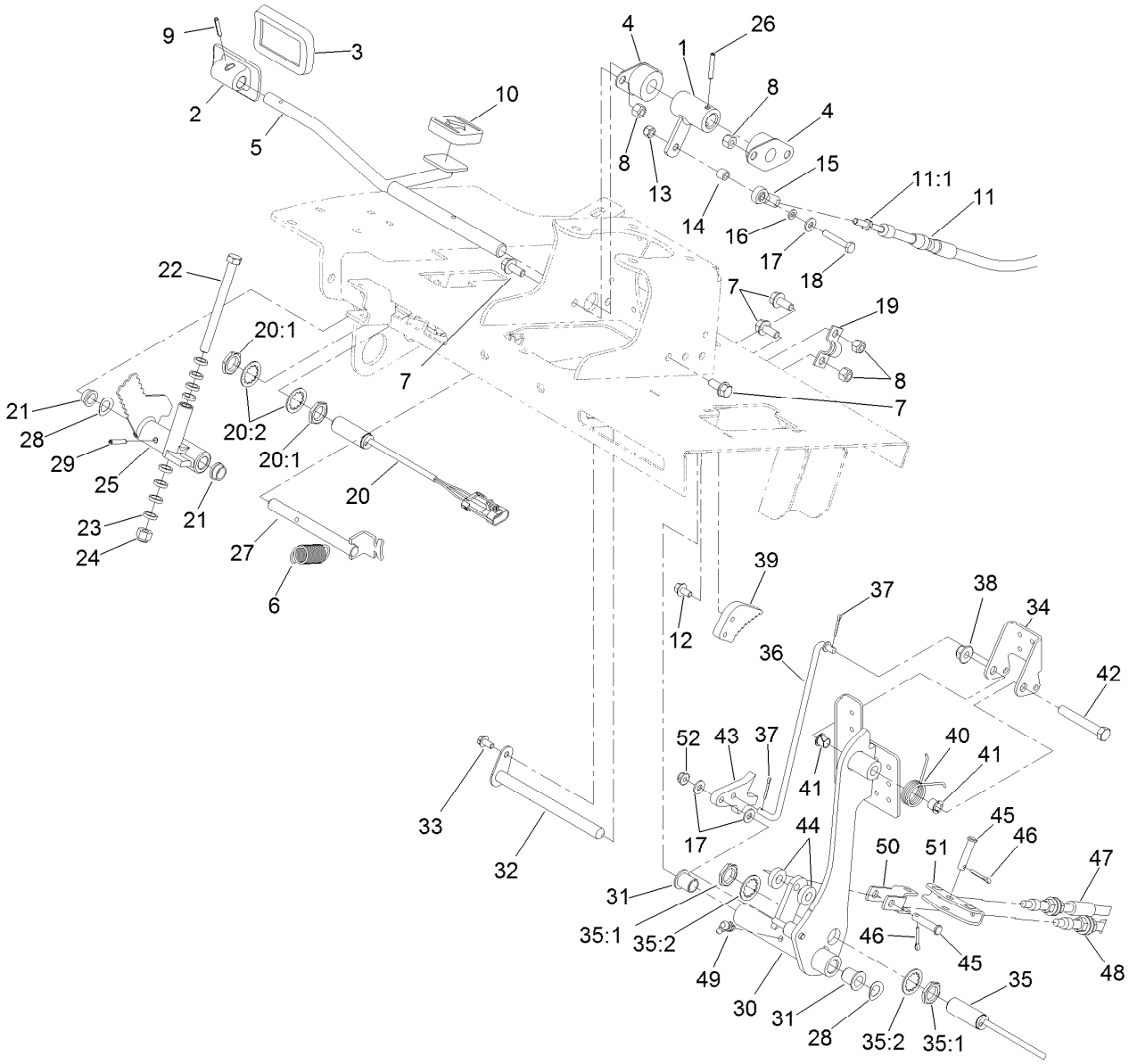


# Pedal Assembly (continued)

| Ref. | Part Number | Qty. | Description |
|---|---|---|---|
| 38 | 104-8301 | 1 | Nut-HF, NI |
| 39 | 99-7214 | 1 | Pawl-Brake |
| 40 | 99-7140 | 1 | Spring-Torsion |
| 41 | 52-2891 | 2 | Bushing-Flanged, Nylon |
| 42 | 323-12 | 1 | Screw-HH |
| 43 | 117-0238 | 1 | Detent |
| 44 | 5-0652 | 2 | Spacer |
| 45 | 283-14 | 2 | Pin-Clevis |

| Ref. | Part Number | Qty. | Description |
|---|---|---|---|
| 46 | 3272-10 | 2 | Pin-Cotter |
| 47 | 117-0106 | 1 | Cable-Brake, RH |
| 48 | 117-0107 | 1 | Cable-Brake, LH |
| 49 | 302-60 | 1 | Fitting-Grease |
| 50 | 115-8060 | 1 | Clevis-Double |
| 51 | 115-8059 | 1 | Yoke-Cable |
| 52 | 104-7201 | 1 | Nut-HF, NI |

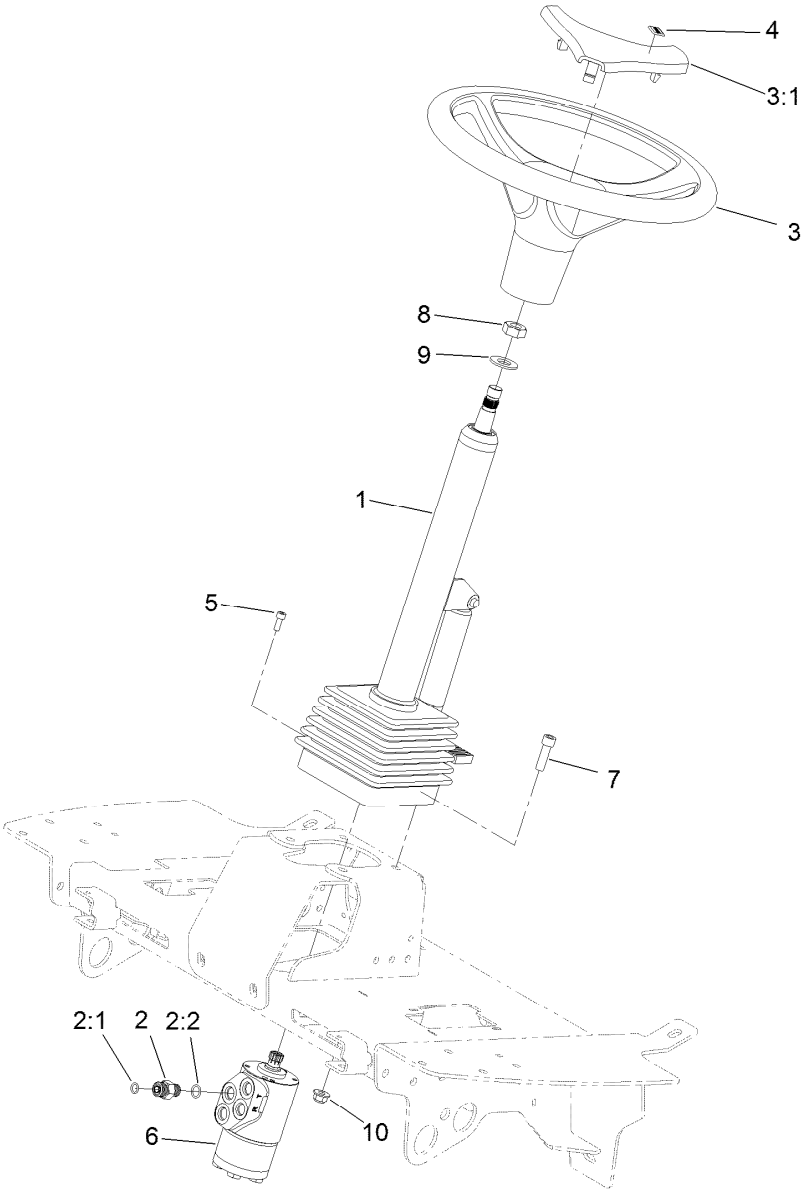


# Steering Assembly

| *Ref.* | *Part Number* | *Qty.* | *Description* |
|---|---|---|---|
| 1 | 106-3622 | 1 | Steering Tilt Column ASM |
| 2 | 340-2 | 4 | Fitting-Straight |
| 2:1 | 237-22 | 1 | O-Ring |
| 2:2 | 237-42 | 1 | O-Ring |
| 3 | 98-1471 | 1 | Wheel-Steering |
| 3:1 | 98-1468 | 1 | Cover-Wheel, Steering |
| 4 | 98-1459 | 1 | Decal |
| 5 | 105-2409 | 4 | Screw-HSH |
| 6 | 106-3621 | 1 | Steering Valve ASM |
| 7 | 3274-1 | 4 | Screw-HSH |
| 8 | 3296-33 | 1 | Nut-Lock, NI |
| 9 | 3256-27 | 1 | Washer-Flat |
| 10 | 104-8301 | 4 | Nut-HF, NI |

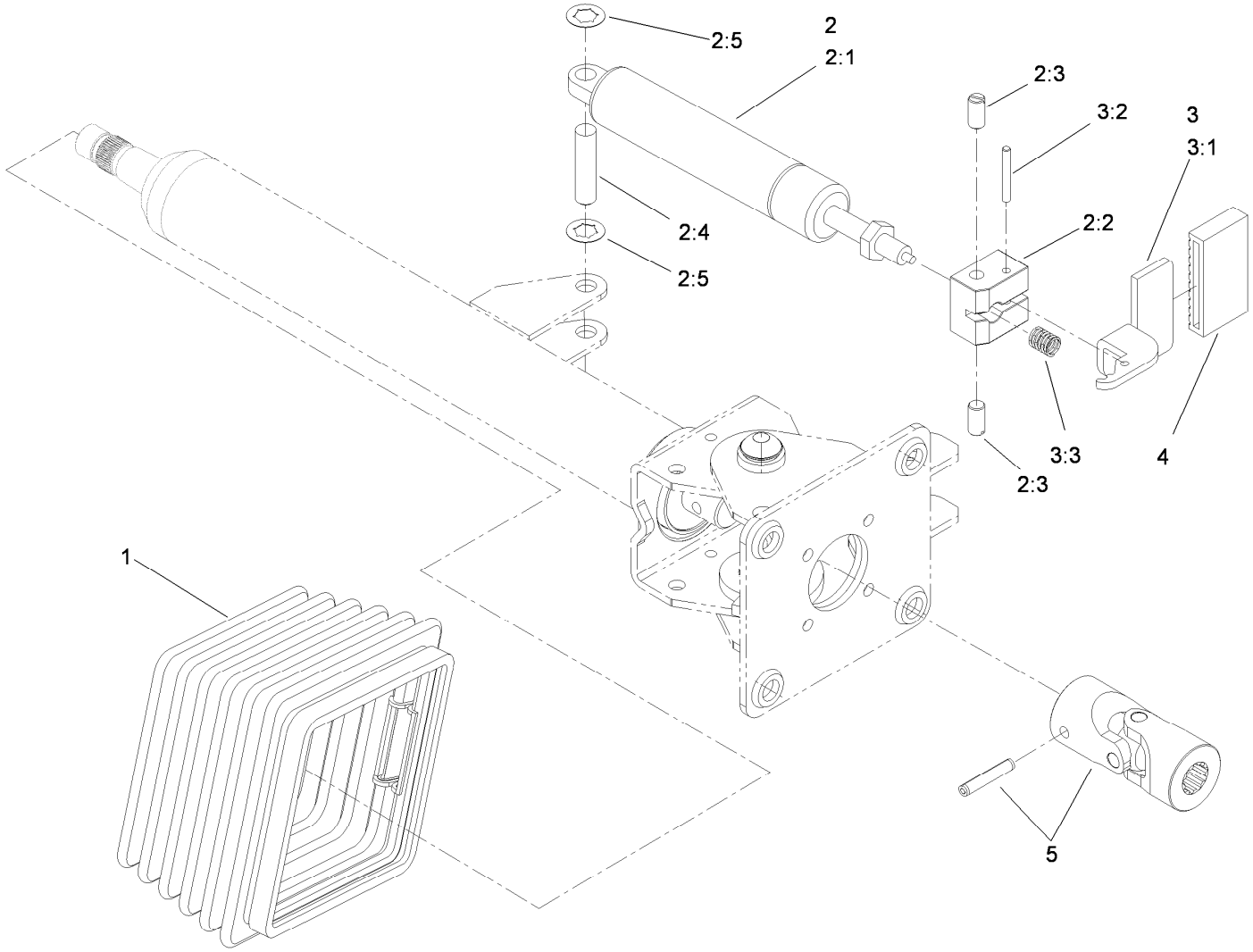


# Steering Tilt Column Assembly No. 106-3622

| *Ref.* | *Part Number* | *Qty.* | *Description* |
|---|---|---|---|
| 1 | 110-6462 | 1 | Bellows-Rubber |
| 2 | 110-6463 | 1 | Cylinder Service Kit |
| 2:1 | | 1 | Cylinder-Gas ● |
| 2:2 | | 1 | Block-Pedal ● |
| 2:3 | | 2 | Bolt ● |
| 2:4 | | 1 | Pin ● |
| 2:5 | | 2 | Washer-Lock ● |
| 3 | 110-6464 | 1 | Pedal Service Kit |
| 3:1 | | 1 | Pedal ● |
| 3:2 | | 1 | Pin ● |
| 3:3 | | 1 | Spring ● |
| 4 | 110-6465 | 1 | Cover-Pedal |
| 5 | 120-6256 | 1 | Universal Joint Kit |

● Not serviced separately

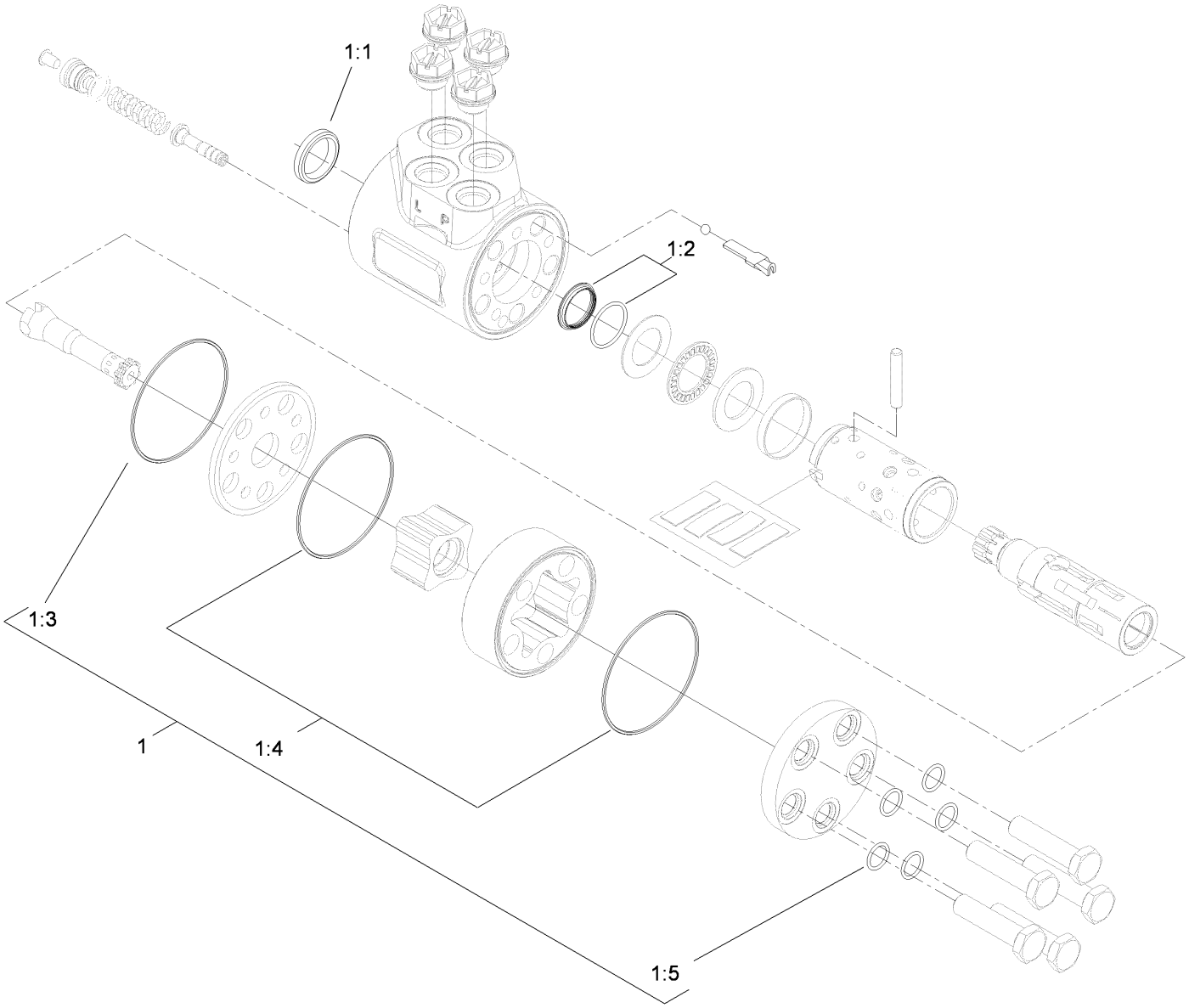


# Steering Valve Assembly No. 106-3621

| *Ref.* | *Part Number* | *Qty.* | *Description* |
|---|---|---|---|
| 1 | 106-6716 | 1 | Seal Kit |
| 1:1 | | 1 | Ring-Seal, Dust ● |
| 1:2 | | 1 | Seal-Shaft ● |
| 1:3 | | 1 | O-Ring ● |
| 1:4 | | 2 | O-Ring ● |
| 1:5 | | 5 | O-Ring ● |

● Not serviced separately

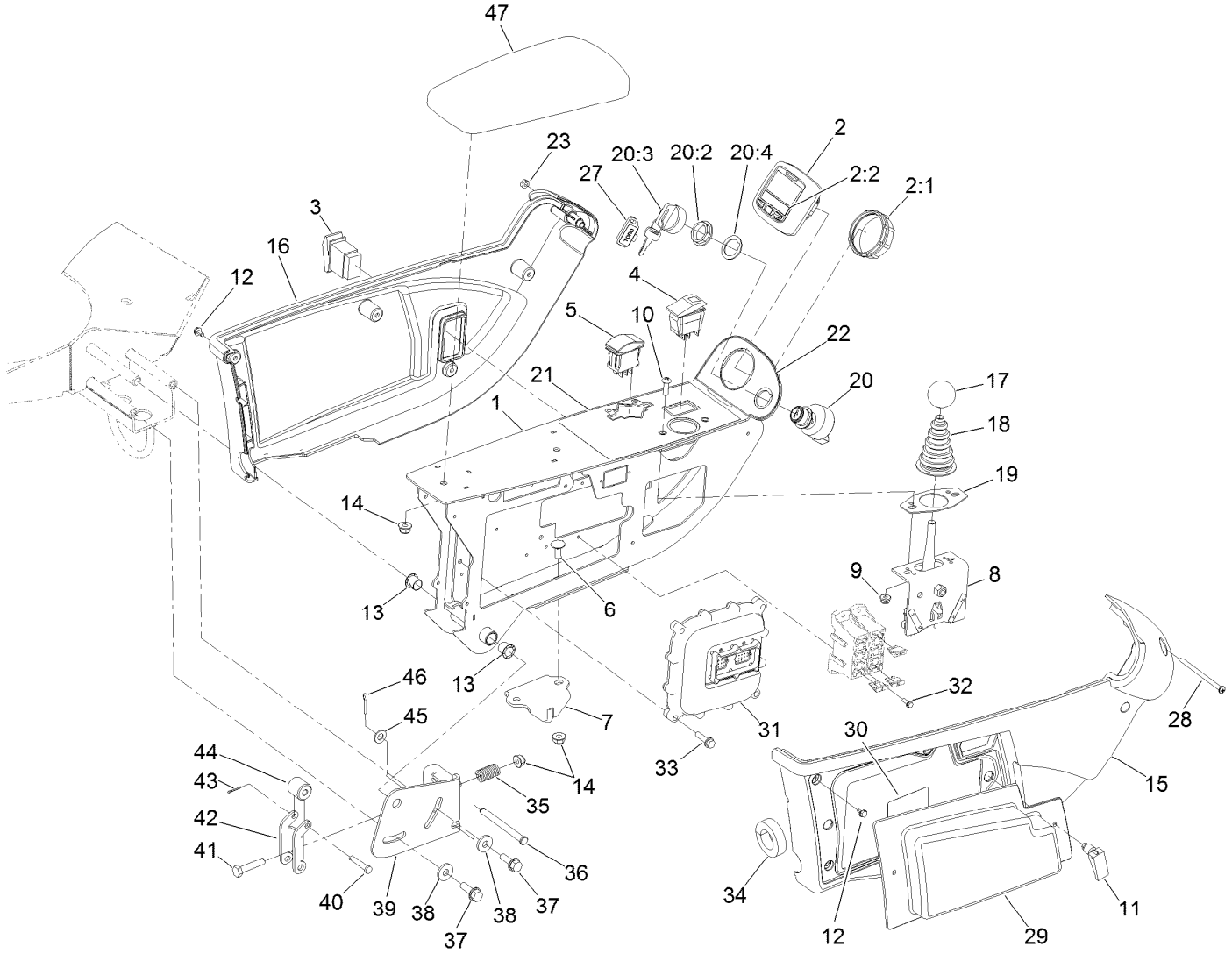


# Control Arm Assembly

| Ref. | Part Number | Qty. | Description |
|---|---|---|---|
| 1 | 120-3801-03 | 1 | Frame-Arm, Control |
| 2 | 120-6310 | 1 | LCD Display ASM |
| 2:1 | 120-4630 | 1 | Nut-Display |
| 2:2 | 120-6311 | 1 | Decal-Display |
| 3 | 95-8999 | 1 | Switch |
| 4 | 105-4232 | 1 | Switch |
| 5 | 100-1535 | 1 | Switch-Rocker, (On)-Off-(On) |
| 6 | 3230-23 | 2 | Bolt-CARR |
| 7 | 110-5340 | 1 | Latch |
| 8 | 120-5280 | 1 | Bracket-Joystick |
| 9 | 104-7201 | 2 | Nut-HF, NI |
| 10 | 3258-166 | 2 | Screw-PRH |
| 11 | 74-5950 | 2 | Latch-Swell |
| 12 | 104-2065 | 10 | Screw-HWH |
| 13 | 256-257 | 2 | Bushing-Nyliner |
| 14 | 104-8300 | 5 | Nut-HF, NI |
| 15 | 108-7605 | 1 | Cover-RH |
| 16 | 108-7604 | 1 | Cover-LH |
| 17 | 233-42 | 1 | Knob |
| 18 | 93-5961 | 1 | Boot-Lever |

| Ref. | Part Number | Qty. | Description |
|---|---|---|---|
| 19 | 112-9181 | 1 | Plate-Boot |
| 20 | 106-5269 | 1 | Ignition Switch ASM |
| 20:2 | 108-8660 | 1 | Nut-Mounting |
| 20:3 | 106-5270 | 1 | Ignition Key Set |
| 20:4 | 108-8659 | 1 | Washer-Backup |
| 21 | 125-8754 | 1 | Decal-Panel, Control |
| 22 | 120-4158 | 1 | Decal-Console, Upper |
| 23 | 3296-2 | 1 | Nut-Lock, NI |
| 27 | 99-8970 | 1 | Key-Latch, Hood |
| 28 | 3250-22 | 1 | Screw-PPH |
| 29 | 114-0446 | 1 | Panel-Access |
| 30 | 117-0169 | 1 | Decal-Fuses |
| 31 | 114-3321 | 1 | Controller-Tec |
| 32 | 32144-87 | 4 | Screw-HWHTF |
| 33 | 32144-86 | 4 | Screw-HWHTF |
| 34 | 110-8912 | 1 | Seal-Foam |
| 35 | 110-5331 | 1 | Spring-Compression |
| 36 | 283-88 | 1 | Pin-Clevis |
| 37 | 3234-29 | 2 | Screw-HHF |
| 38 | 4-2390 | 2 | Washer-Flat |
| 39 | 110-5313-03 | 1 | Bracket-Retainer |

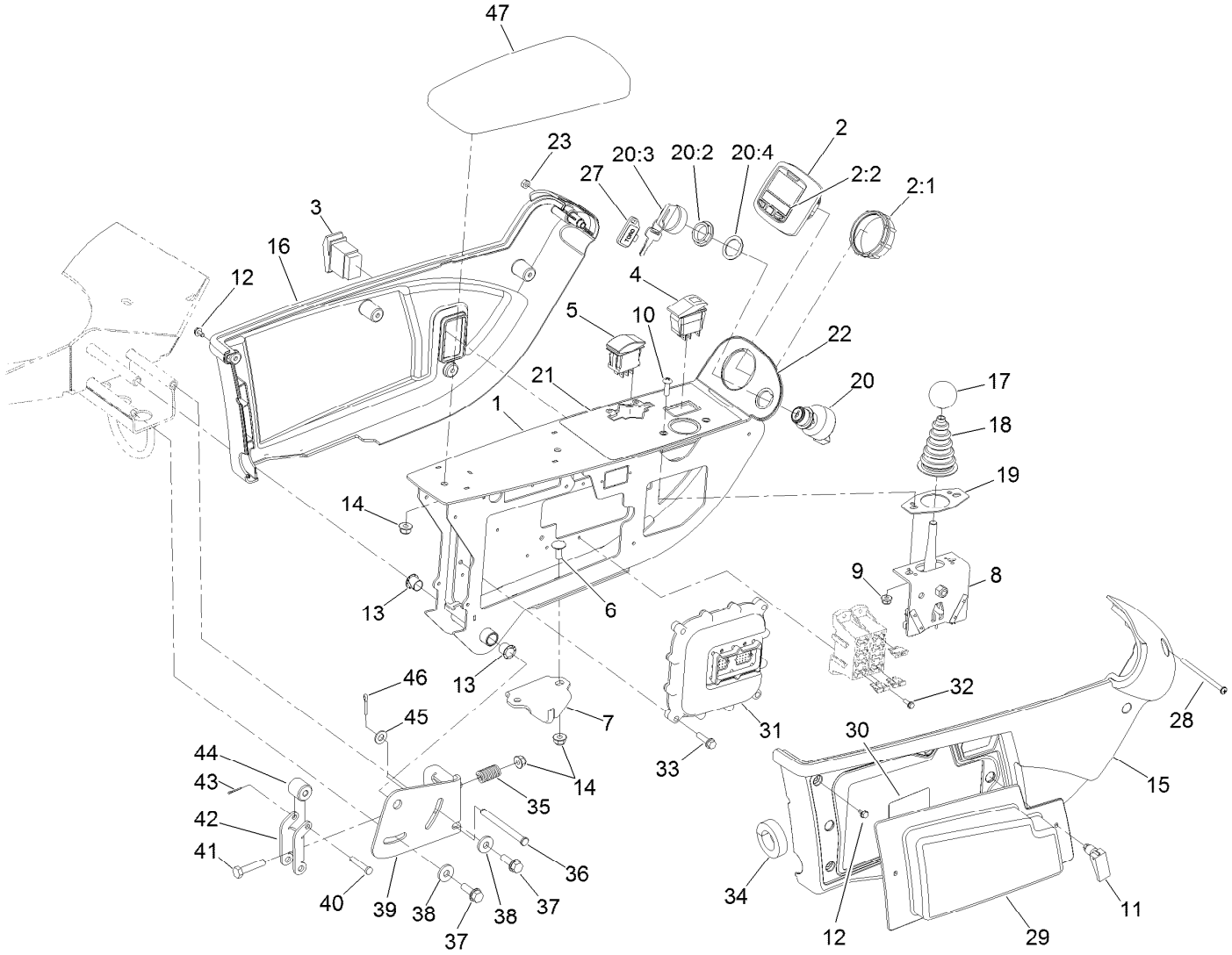


# Control Arm Assembly (continued)

| Ref. | Part Number | Qty. | Description |
|---|---|---|---|
| 40 | 283-73 | 1 | Pin-Clevis |
| 41 | 322-7 | 1 | Screw-HH |
| 42 | 110-5314 | 1 | Latch |
| 43 | 3272-1 | 1 | Pin-Cotter |
| 44 | 110-8856 | 1 | Spacer |
| 45 | 3256-23 | 1 | Washer-Plain |
| 46 | 3272-10 | 1 | Pin-Cotter |
| 47 | 108-7602 | 1 | Rest-Arm |

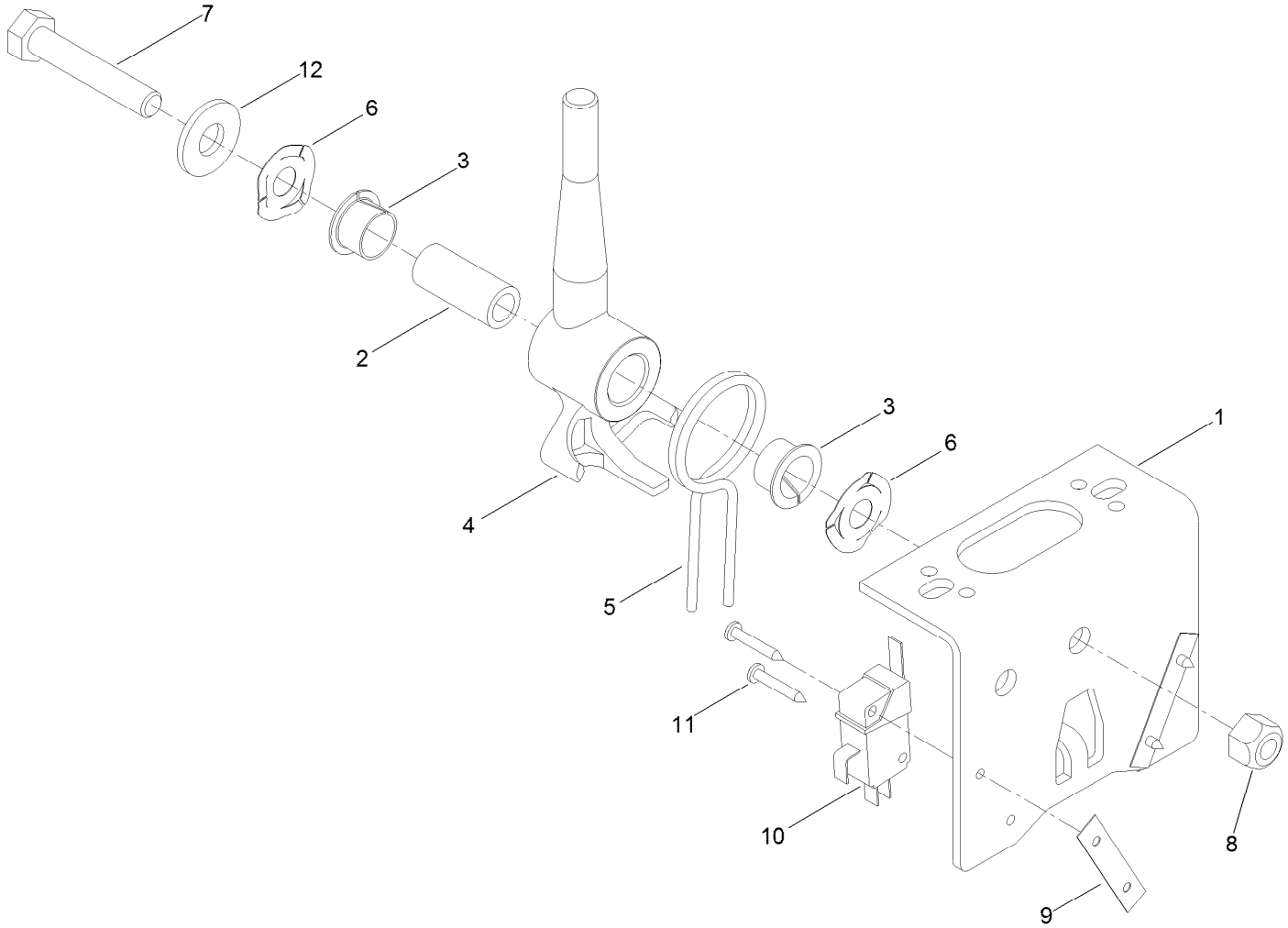


# Joystick Bracket Assembly No. 120-5280

| *Ref.* | *Part Number* | *Qty.* | *Description* |
|---|---|---|---|
| 1 | 115-5357-03 | 1 | Bracket-Joystick |
| 2 | 106-4192 | 1 | Spacer |
| 3 | 93-5547 | 2 | Bushing-Nylon |
| 4 | 119-3540 | 1 | Hub-Pivot, Joystick |
| 5 | 105-8289 | 1 | Spring-Torsion |
| 6 | 106-4193 | 2 | Washer-Finger, Spring |
| 7 | 322-9 | 1 | Screw-HH |
| 8 | 3296-29 | 1 | Nut-Lock, NI |
| 9 | 3290-354 | 2 | Nut-Speed |
| 10 | 108-6496 | 2 | Switch (W/Boot) |
| 11 | 95-3003 | 4 | Screw-PPHTF |
| 12 | 3256-3 | 1 | Washer-Flat |

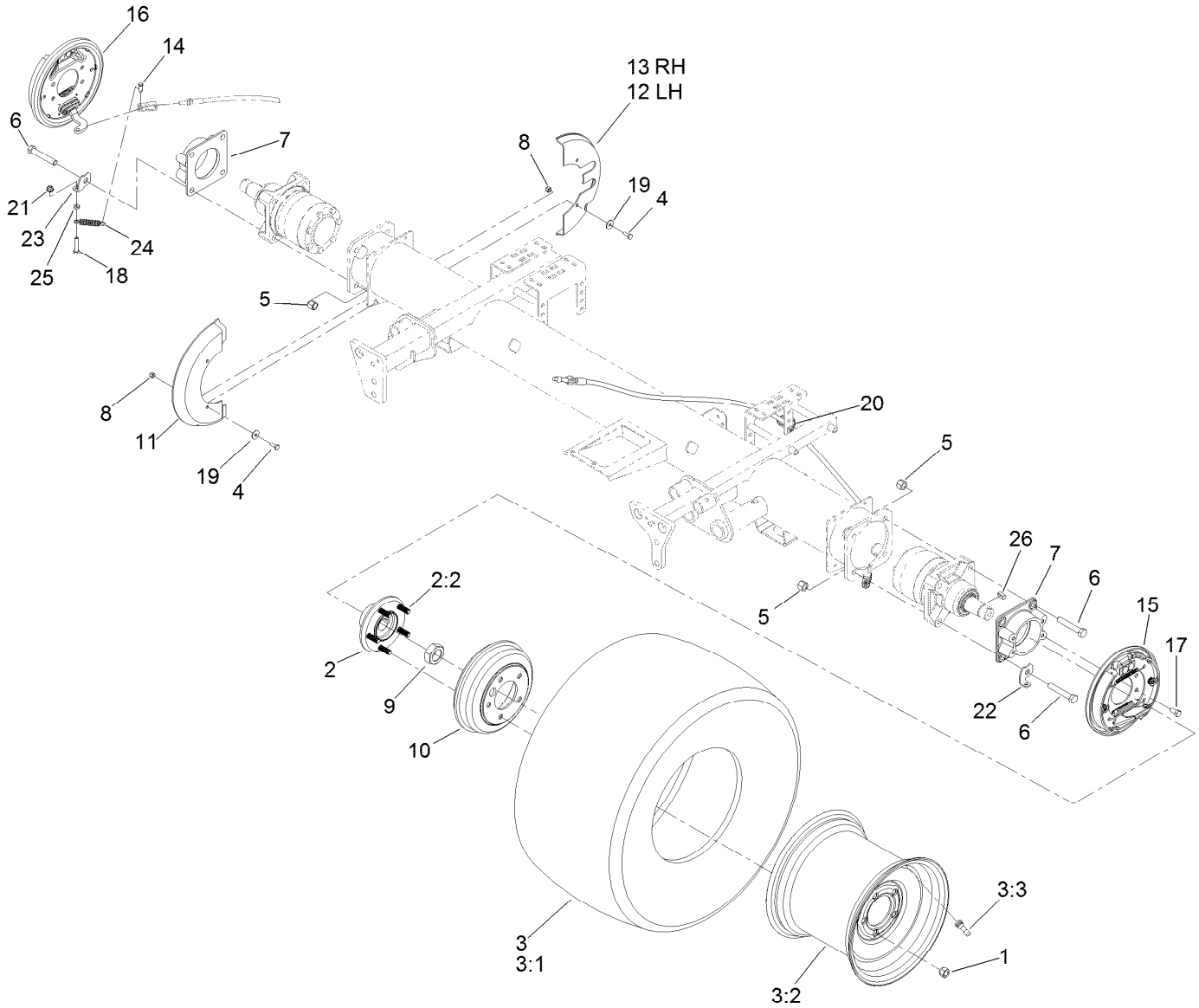


# Front Axle Assembly

| Ref. | Part Number | Qty. | Description |
|---|---|---|---|
| 1 | 242-50 | 10 | Nut-Lug |
| 2 | 121-5631 | 2 | Hub ASM |
| 2:2 | 114-3918 | 5 | Stud-Wheel |
| 3 | 117-5194 | 2 | Tire ASM |
| 3:1 | 117-5196 | 1 | Tire |
| 3:2 | 117-5197 | 1 | Wheel |
| 3:3 | 232-27 | 1 | Stem-Valve |
| 4 | 321-4 | 8 | Screw-HH |
| 5 | 3296-23 | 8 | Nut-Lock, NI |
| 6 | 325-12 | 8 | Screw-HH |
| 7 | 120-6253-03 | 2 | Adapter-Brake |
| 8 | 3296-42 | 8 | Nut-Lock, NI |
| 9 | 117-3290 | 2 | Nut-Hex |
| 10 | 114-8864 | 2 | Drum-Brake |
| 11 | 110-0950 | 2 | Shield-Wheel, Front |

| Ref. | Part Number | Qty. | Description |
|---|---|---|---|
| 12 | 110-0951 | 1 | Shield-Wheel, Rear (LH) |
| 13 | 110-8878 | 1 | Shield-Wheel, Rear (RH) |
| 14 | 283-62 | 2 | Pin-Clevis |
| 15 | 120-6261 | 1 | LH Brake ASM |
| 16 | 120-6260 | 1 | RH Brake ASM |
| 17 | 323-4 | 8 | Screw-HH |
| 18 | 322-7 | 2 | Screw-HH |
| 19 | 3256-67 | 8 | Washer |
| 20 | 3290-378 | 2 | Tie-Cable |
| 21 | 104-8300 | 2 | Nut-HF, NI |
| 22 | 120-6267 | 1 | Clip-Spring, LH |
| 23 | 120-6266 | 1 | Clip-Spring, RH |
| 24 | 87-4020 | 2 | Spring-Extension |
| 25 | 3218-2 | 2 | Nut-Hex Jam |
| 26 | 117-5198 | 2 | Key-Square |

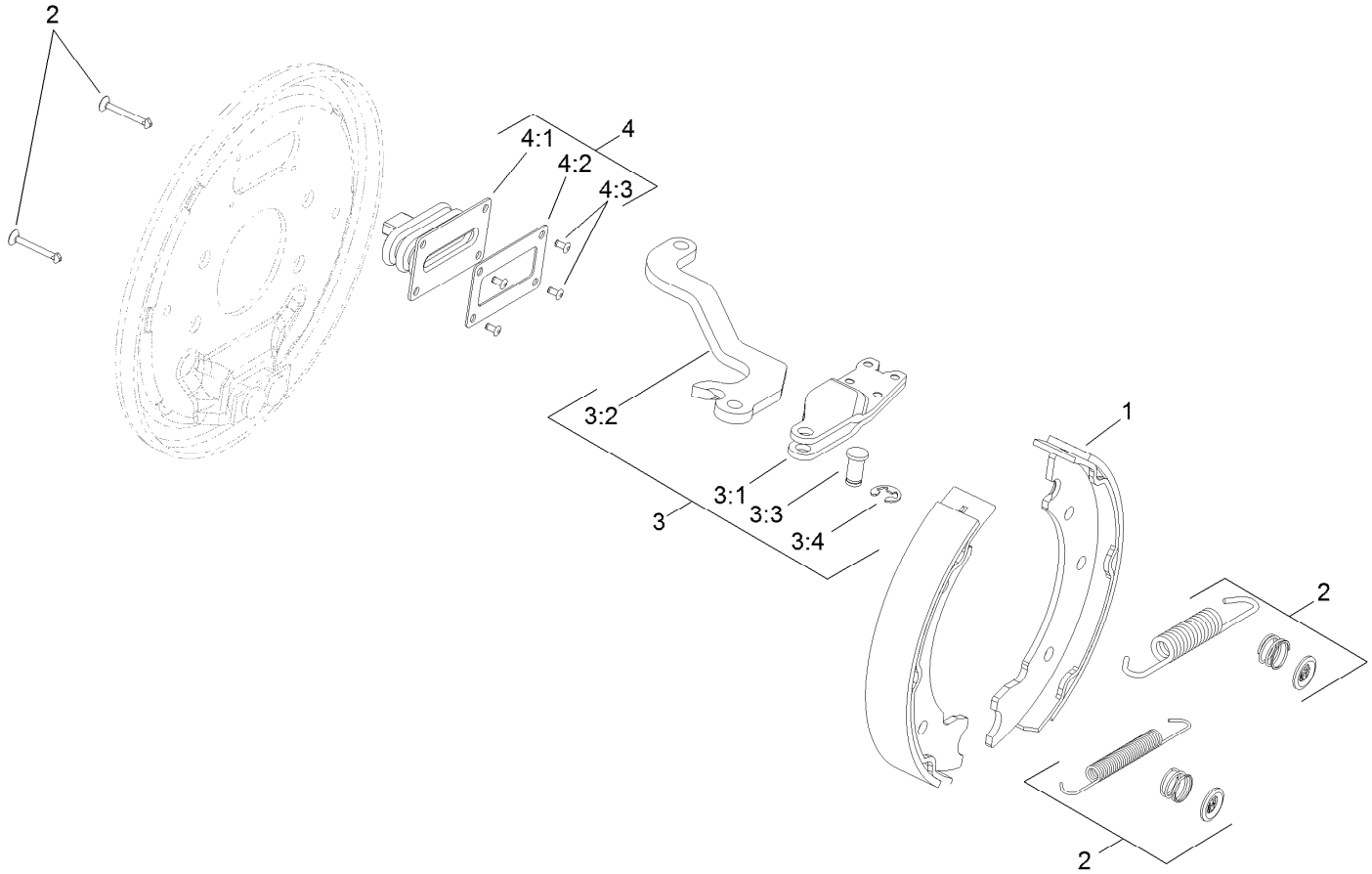


# LH Brake Assembly No. 120-6261

| *Ref.* | *Part Number* | *Qty.* | *Description* |
|---|---|---|---|
| 1 | 108-6981 | 1 | Brake Shoe Kit |
| 2 | 108-6983 | 1 | Brake Hardware Kit |
| 3 | 110-8910 | 1 | LH Actuator Kit |
| 3:1 | | 1 | Housing ● |
| 3:2 | | 1 | Lever-LH ● |
| 3:3 | | 1 | Pin-Pivot ● |
| 3:4 | | 1 | E-Ring ● |
| 4 | 110-8885 | 1 | Dust Boot Kit |
| 4:1 | | 1 | Boot ● |
| 4:2 | | 1 | Plate-Back Up ● |
| 4:3 | | 2 | Rivet ● |

● Not serviced separately

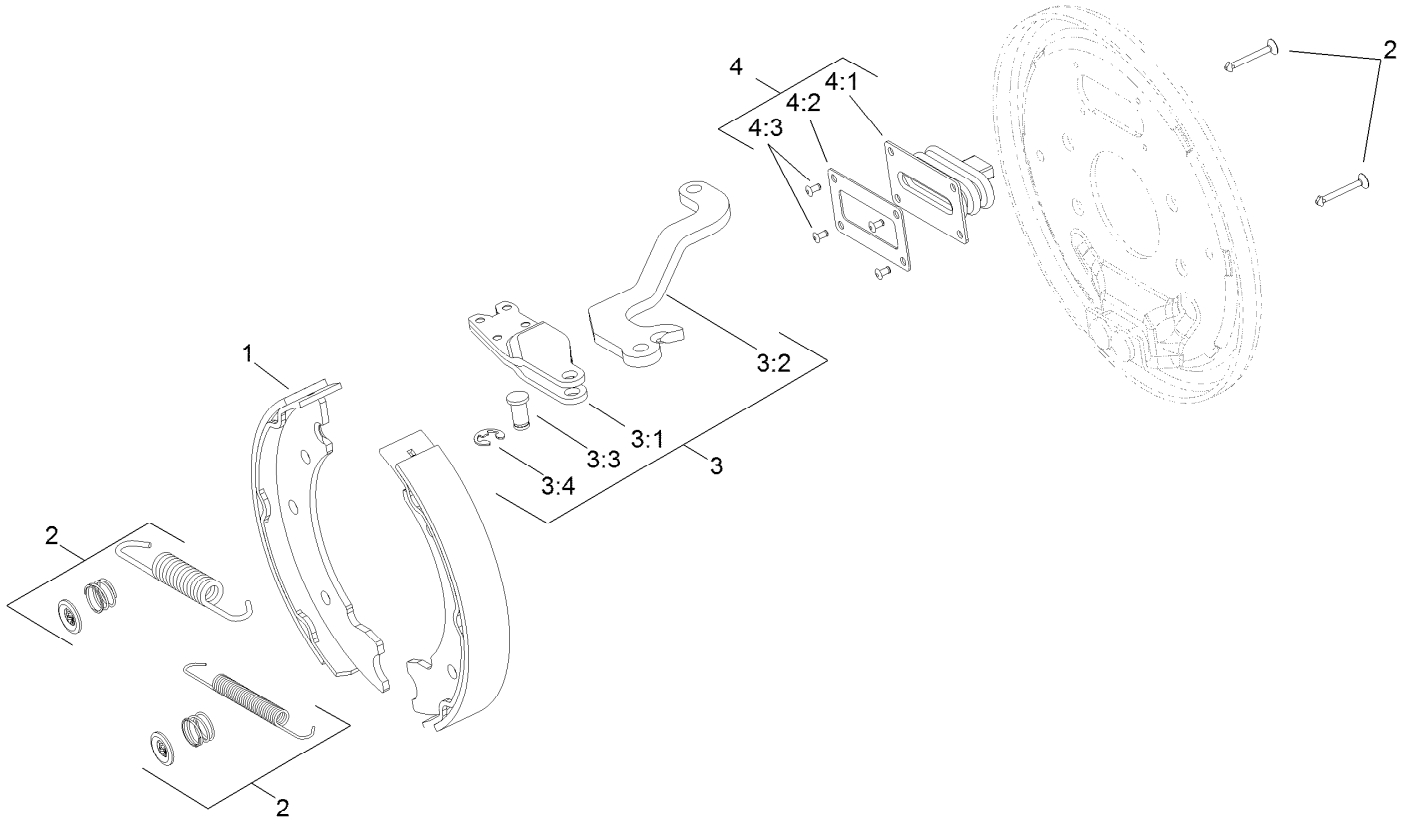


# RH Brake Assembly No. 120-6260

| *Ref.* | *Part Number* | *Qty.* | *Description* |
|---|---|---|---|
| 1 | 108-6981 | 1 | Brake Shoe Kit |
| 2 | 108-6983 | 1 | Brake Hardware Kit |
| 3 | 110-8884 | 1 | RH Actuator Kit |
| 3:1 | | 1 | Housing ● |
| 3:2 | | 1 | Lever-RH ● |
| 3:3 | | 1 | Pin-Pivot ● |
| 3:4 | | 1 | E-Ring ● |
| 4 | 110-8885 | 1 | Dust Boot Kit |
| 4:1 | | 1 | Boot ● |
| 4:2 | | 1 | Plate-Back Up ● |
| 4:3 | | 2 | Rivet ● |

● Not serviced separately

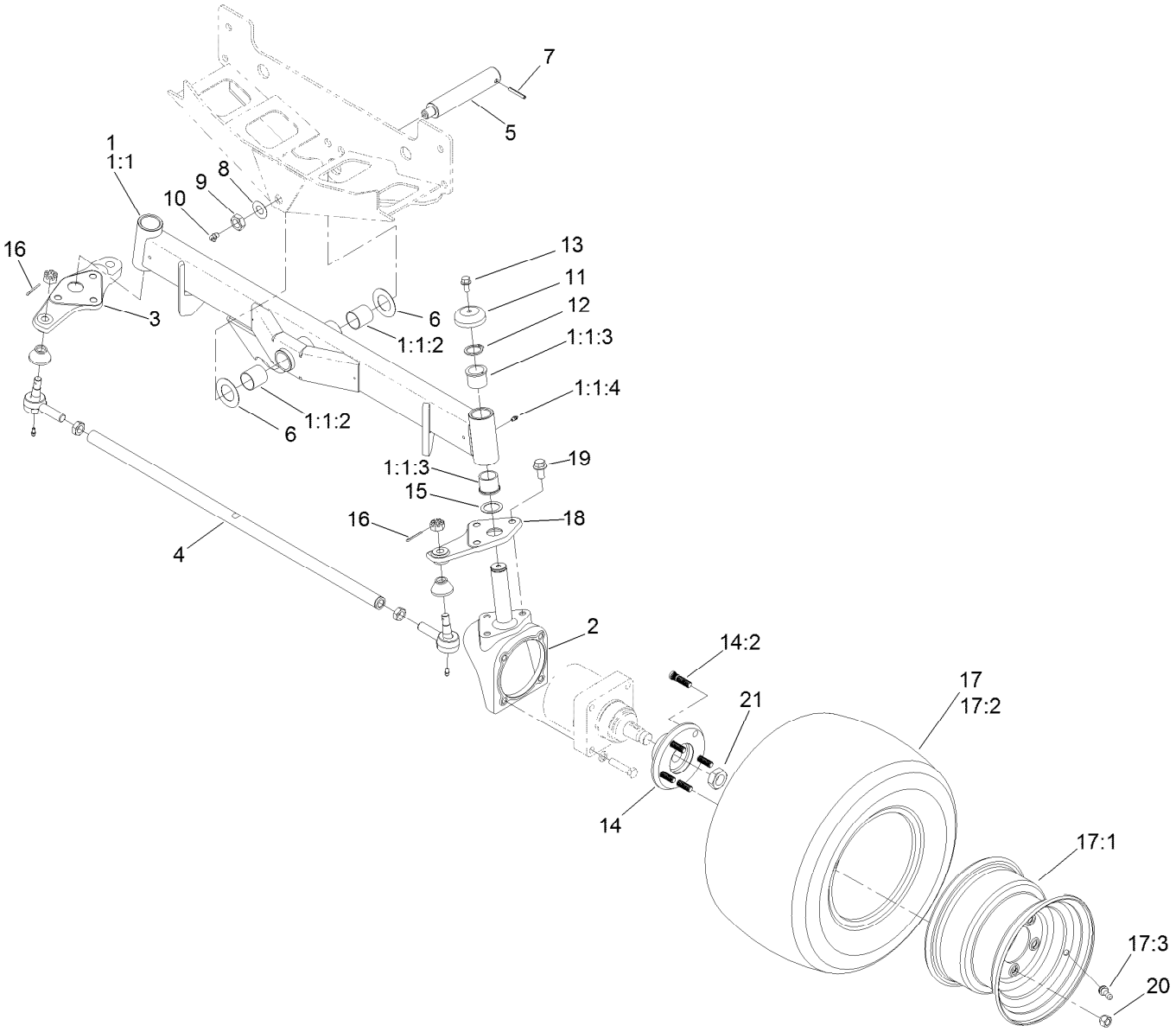


# Rear Axle Assembly

| Ref. | Part Number | Qty. | Description |
|---|---|---|---|
| 1 | 117-0256-03 | 1 | Axle ASM |
| 1:1 | | 1 | Axle ● |
| 1:1:2 | 99-6964 | 2 | Bushing-Axle |
| 1:1:3 | 104-0015 | 4 | Bushing-Flange |
| 1:1:4 | 302-5 | 2 | Fitting-Grease |
| 2 | 107-4517-03 | 2 | Housing-Motor |
| 3 | 110-5295-03 | 1 | Link-Drag, RH |
| 4 | 110-5334-03 | 1 | Tie Rod ASM |
| 5 | 98-8173 | 1 | Pin-Pivot, Axle |
| 6 | 99-8432 | 2 | Washer-Thrust |
| 7 | 32121-32 | 1 | Pin-Roll |
| 8 | 71-4540 | 1 | Washer-Thrust |
| 9 | 32146-20 | 1 | Nut-Hex |
| 10 | 302-33 | 1 | Fitting-Grease |
| 11 | 69-8890 | 2 | Cap-Spindle |
| 12 | 32151-77 | 2 | Ring-Retaining, External |
| 13 | 3234-1 | 2 | Screw-HHF |
| 14 | 121-5633 | 2 | Hub ASM |
| 14:2 | 114-3918 | 5 | Stud-Wheel |
| 15 | 76-2980 | 2 | Washer-Thrust |
| 16 | 3272-12 | 2 | Pin-Cotter |
| 17 | 117-0281 | 2 | Rim And Tire ASM |
| 17:1 | 117-0280 | 1 | Rim |
| 17:2 | 117-5125 | 1 | Tire |
| 17:3 | 232-27 | 1 | Stem-Valve |
| 18 | 110-5297-03 | 1 | Link-Drag, LH |
| 19 | 3234-6 | 6 | Screw-HHF |
| 20 | 242-50 | 10 | Nut-Lug |
| 21 | 26-3790 | 2 | Nut-Lock |

● Not serviced separately

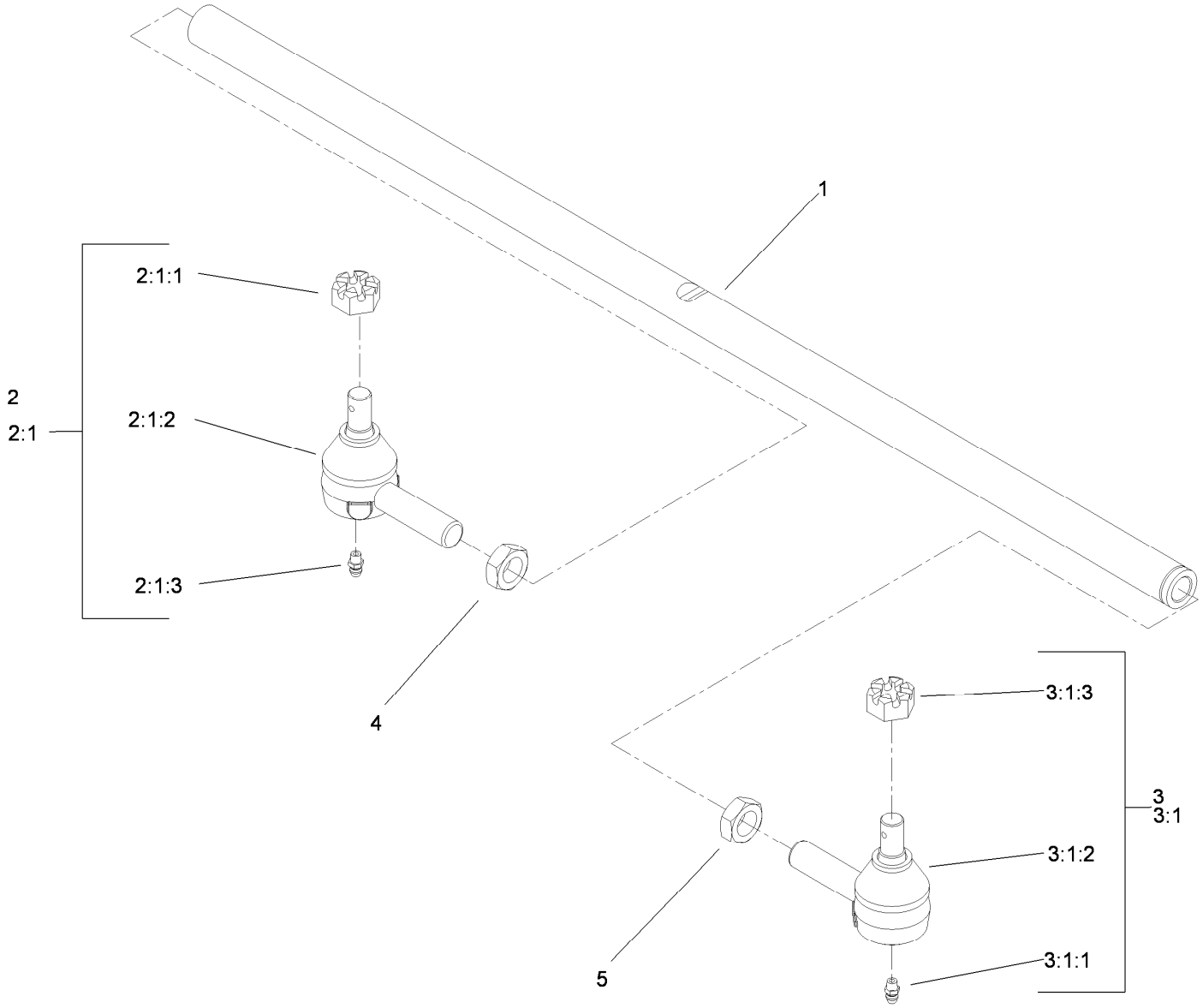


# Tie Rod Assembly No. 110-5334-03

| *Ref.* | *Part Number* | *Qty.* | *Description* |
|---|---|---|---|
| 1 | 110-5335 | 1 | Rod-Tie |
| 2 | 71-4740-03 | 1 | RH Tie Rod End ASM |
| 2:1 | | 1 | End-Rod, Tie (RH) ● |
| 2:1:1 | 105-7941 | 1 | Nut-Hex, Slotted |
| 2:1:2 | 105-7835 | 1 | Seal |
| 2:1:3 | 302-5 | 1 | Fitting-Grease |
| 3 | 2411-46-03 | 1 | LH Tie Rod ASM |
| 3:1 | | 1 | End-Rod, Tie (LH) ● |
| 3:1:1 | 302-5 | 1 | Fitting-Grease |
| 3:1:2 | 105-7835 | 1 | Seal |
| 3:1:3 | 105-7941 | 1 | Nut-Hex, Slotted |
| 4 | 84-5300 | 1 | Nut-Jam |
| 5 | 110-5337 | 1 | Nut-Jam |

● Not serviced separately

# No. 1, 4 and 5 Deck and Lift Arm Assembly

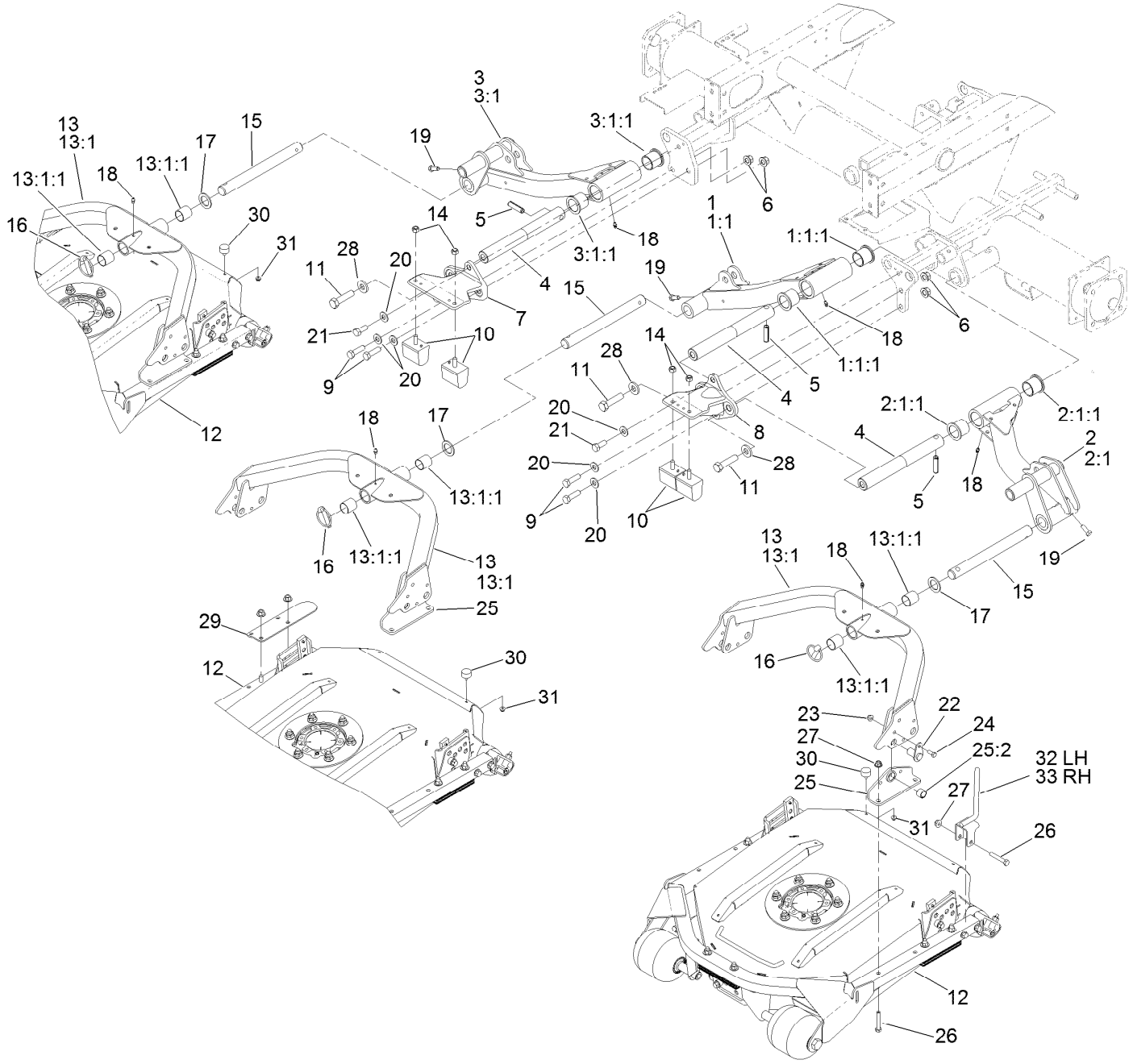

# No. 1, 4 and 5 Deck and Lift Arm Assembly (continued)

| Ref. | Part Number | Qty. | Description |
|---|---|---|---|
| 1 | 114-0381-03 | 1 | Arm No. 1 ASM |
| 1:1 | | 1 | Arm ● |
| 1:1:1 | 69-6470 | 2 | Bushing-Caster |
| 2 | 114-0384-03 | 1 | Arm No. 4 ASM |
| 2:1 | | 1 | Arm ● |
| 2:1:1 | 69-6470 | 2 | Bushing-Caster |
| 3 | 114-0385-03 | 1 | Arm No. 5 ASM |
| 3:1 | | 1 | Arm ● |
| 3:1:1 | 69-6470 | 2 | Bushing-Caster |
| 4 | 117-0208 | 3 | Shaft-Pivot, Liftarm |
| 5 | 32121-122 | 3 | Pin-Roll |
| 6 | 99-5107 | 4 | Nut-Lock |
| 7 | 117-0250-03 | 1 | Tippe-RH |
| 8 | 117-0252-03 | 1 | Tipper-LH |
| 9 | 325-7 | 4 | Screw-HH |
| 10 | 87-3470 | 4 | Bumper |
| 11 | 327-7 | 3 | Screw-HH |
| 12 | 30845 | 3 | 22 Inch Contour Plus Deck ASM |
| 13 | 108-7384-03 | 3 | Carrier Frame ASM |
| 13:1 | | 1 | Frame-Carrier ● |
| 13:1:1 | 108-4000 | 2 | Bushing |
| 14 | 33025-00 | 4 | Nut-Lock, NI |
| 15 | 95-8979 | 3 | Shaft |
| 16 | 283-71 | 3 | Pin-Lynch |
| 17 | 3-6781 | 3 | Washer-Thrust |
| 18 | 302-5 | 6 | Fitting-Grease |
| 19 | 323-6 | 3 | Screw-HH |
| 20 | 87-7270 | 6 | Washer-Thrust |
| 21 | 325-5 | 2 | Screw-HH |
| 22 | 117-0132 | 6 | Pin |
| 23 | 104-8300 | 6 | Nut-HF, NI |
| 24 | 322-3 | 6 | Screw-HH |
| 25 | 117-0118 | 6 | Pivot ASM |
| 25:2 | 108-8482 | 1 | Bushing-Sleeve |
| 26 | 323-11 | 14 | Screw-HH |
| 27 | 104-8301 | 14 | Nut-HF, NI |
| 28 | 99-7667 | 3 | Washer-Flat |
| 29 | 105-9831-03 | 1 | Bracket-Bumper, No. 1 |
| 30 | 240-14 | 3 | Bumper-Rubber |
| 31 | 104-7201 | 3 | Nut-HF, NI |
| 32 | 117-0247-03 | 1 | Guard-Foot, LH |
| 33 | 117-0248-03 | 1 | Guard-Foot, RH |

● Not serviced separately

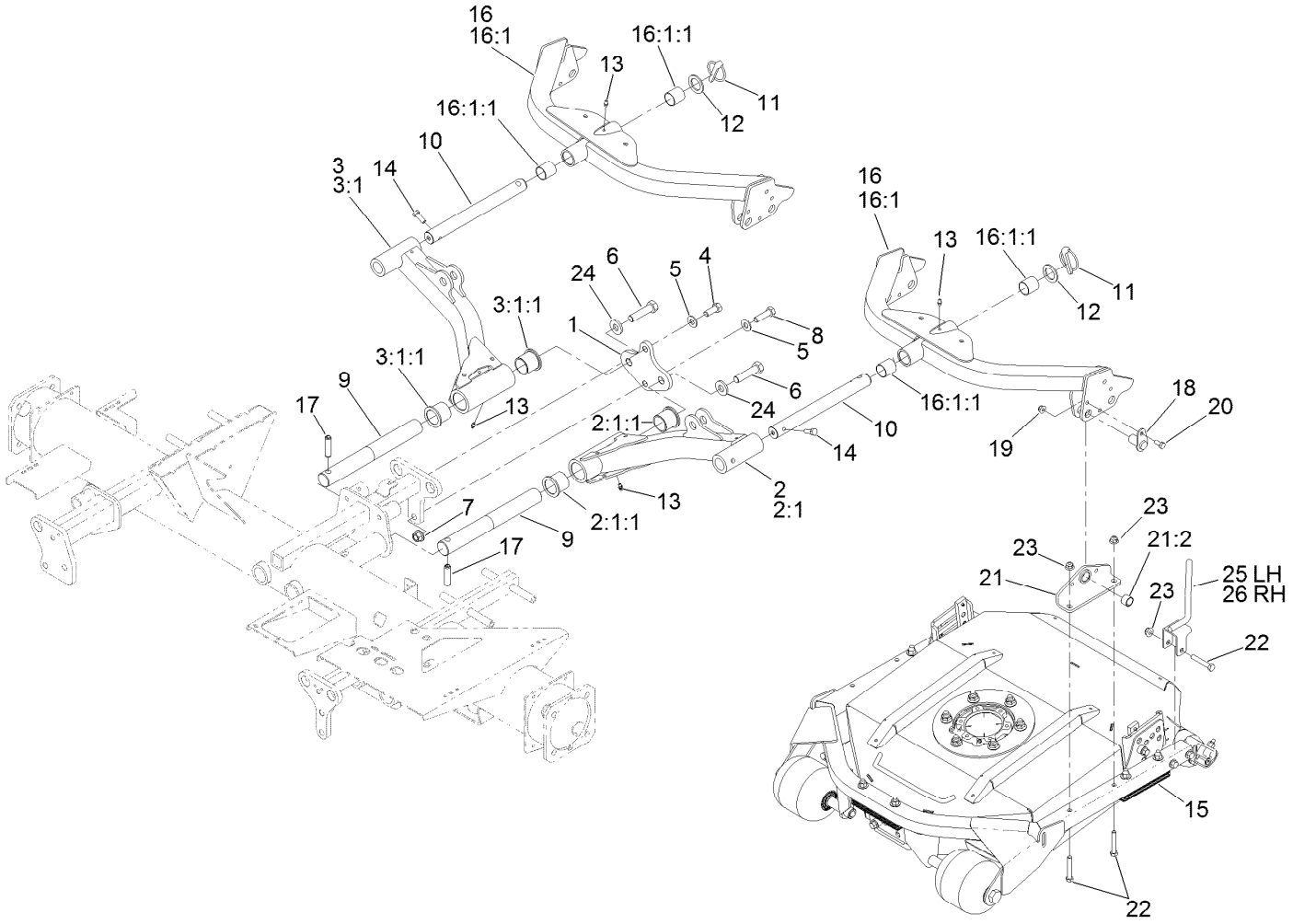


# No. 2 and 3 Deck and Lift Arm Assembly

| Ref. | Part Number | Qty. | Description |
|---|---|---|---|
| 1 | 114-0352-01 | 1 | Plate-Bridge, No. 2 And 3 |
| 2 | 114-0382-03 | 1 | Arm No. 2 ASM |
| 2:1 | | 1 | Arm ● |
| 2:1:1 | 69-6470 | 2 | Bushing-Caster |
| 3 | 114-0383-03 | 1 | Arm No. 3 ASM |
| 3:1 | | 1 | Arm ● |
| 3:1:1 | 69-6470 | 2 | Bushing-Caster |
| 4 | 325-5 | 1 | Screw-HH |
| 5 | 87-7270 | 2 | Washer-Thrust |
| 6 | 327-7 | 2 | Screw-HH |
| 7 | 99-5107 | 1 | Nut-Lock |
| 8 | 325-7 | 1 | Screw-HH |
| 9 | 117-0208 | 2 | Shaft-Pivot, Liftarm |
| 10 | 95-8979 | 2 | Shaft |
| 11 | 283-71 | 2 | Pin-Lynch |
| 12 | 3-6781 | 2 | Washer-Thrust |
| 13 | 302-5 | 4 | Fitting-Grease |

| Ref. | Part Number | Qty. | Description |
|---|---|---|---|
| 14 | 323-6 | 2 | Screw-HH |
| 15 | 30845 | 2 | 22 Inch Contour Plus Deck ASM |
| 16 | 108-7384-03 | 2 | Carrier Frame ASM |
| 16:1 | | 1 | Frame-Carrier ● |
| 16:1:1 | 108-4000 | 2 | Bushing |
| 17 | 32121-122 | 2 | Pin-Roll |
| 18 | 117-0132 | 4 | Pin |
| 19 | 104-8300 | 4 | Nut-HF, NI |
| 20 | 322-3 | 4 | Screw-HH |
| 21 | 117-0118 | 4 | Pivot ASM |
| 21:2 | 108-8482 | 1 | Bushing-Sleeve |
| 22 | 323-11 | 10 | Screw-HH |
| 23 | 104-8301 | 10 | Nut-HF, NI |
| 24 | 99-7667 | 2 | Washer-Flat |
| 25 | 117-0247-03 | 1 | Guard-Foot, LH |
| 26 | 117-0248-03 | 1 | Guard-Foot, RH |

● Not serviced separately

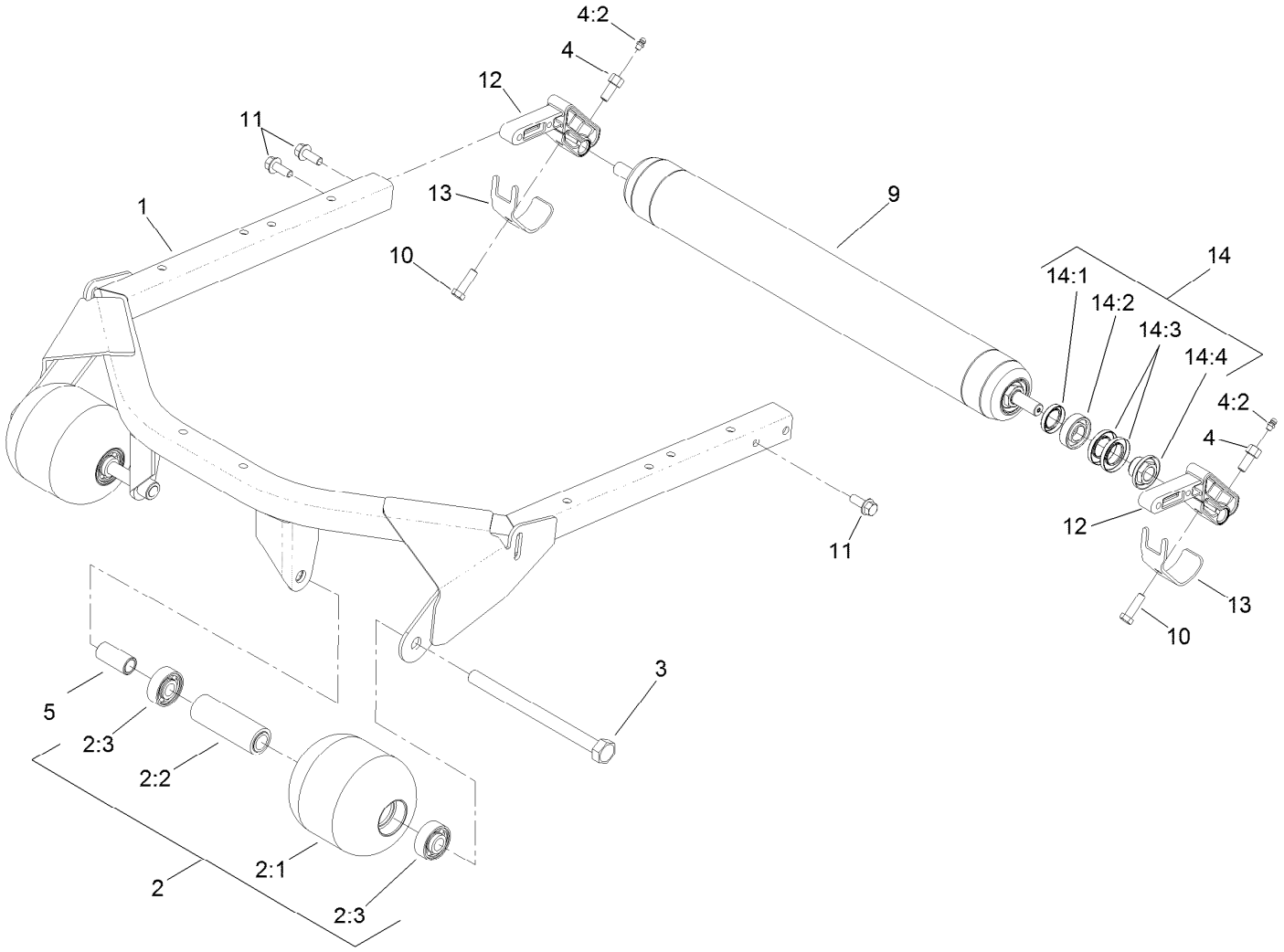


# Roller and Carrier Frame

| Ref. | Part Number | Qty. | Description |
|---|---|---|---|
| 1 | 114-0440-03 | 1 | Support-Deck |
| 2 | 115-3418 | 2 | Roller ASM |
| 2:1 | 104-1093 | 1 | Roller |
| 2:2 | 100-5762 | 1 | Spacer-Bearing |
| 2:3 | 120-3366 | 2 | Bearing |
| 3 | 117-0172 | 2 | Screw-HH |
| 4 | 112-5270 | 2 | Roller Shaft Screw ASM |
| 4:2 | 302-5 | 1 | Fitting-Grease |
| 5 | 114-0430 | 2 | Tube-Seg, Roller |
| 9 | 108-7387 | 1 | Roller ASM |

| Ref. | Part Number | Qty. | Description |
|---|---|---|---|
| 10 | 323-7 | 2 | Screw-HH |
| 11 | 3234-11 | 4 | Screw-HHF |
| 12 | 112-5268 | 2 | Mount-Roller |
| 13 | 107-7816 | 2 | Bracket-Skid |
| 14 | 114-5430 | 1 | Roller Rebuild Kit |
| 14:1 | 114-3717 | 2 | Seal-Oil |
| 14:2 | 112-5290 | 2 | Bearing-Steel, Stainless |
| 14:3 | 112-7494 | 4 | Seal |
| 14:4 | 114-5411 | 2 | Nut-Lock, Bearing |

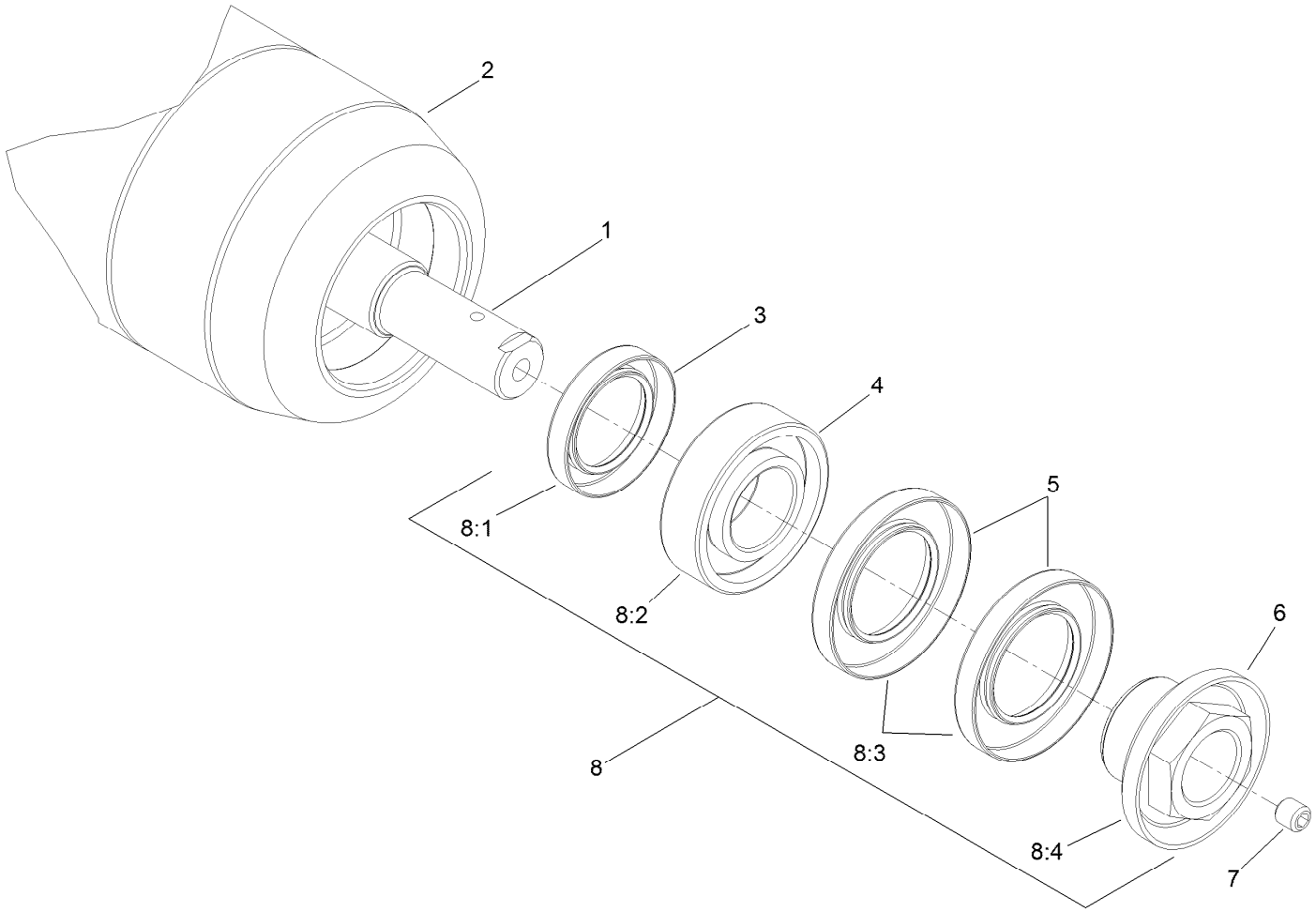


# Roller Assembly No. 108-7387

| *Ref.* | *Part Number* | *Qty.* | *Description* |
|---|---|---|---|
| 1 | 108-7388 | 1 | Shaft-Roller |
| 2 | 108-7389-03 | 1 | Roller Tube ASM |
| 3 | 114-3717 | 2 | Seal-Oil |
| 4 | 112-5290 | 2 | Bearing-Steel, Stainless |
| 5 | 112-7494 | 4 | Seal |
| 6 | 114-3745 | 2 | Nut-Lock, Bearing |
| 7 | 108-0989 | 2 | Screw-Set |
| 8 | 114-5430 | 1 | Roller Rebuild Kit |
| 8:1 | 114-3717 | 2 | Seal-Oil |
| 8:2 | 112-5290 | 2 | Bearing-Steel, Stainless |
| 8:3 | 112-7494 | 4 | Seal |
| 8:4 | 114-5411 | 2 | Nut-Lock, Bearing |

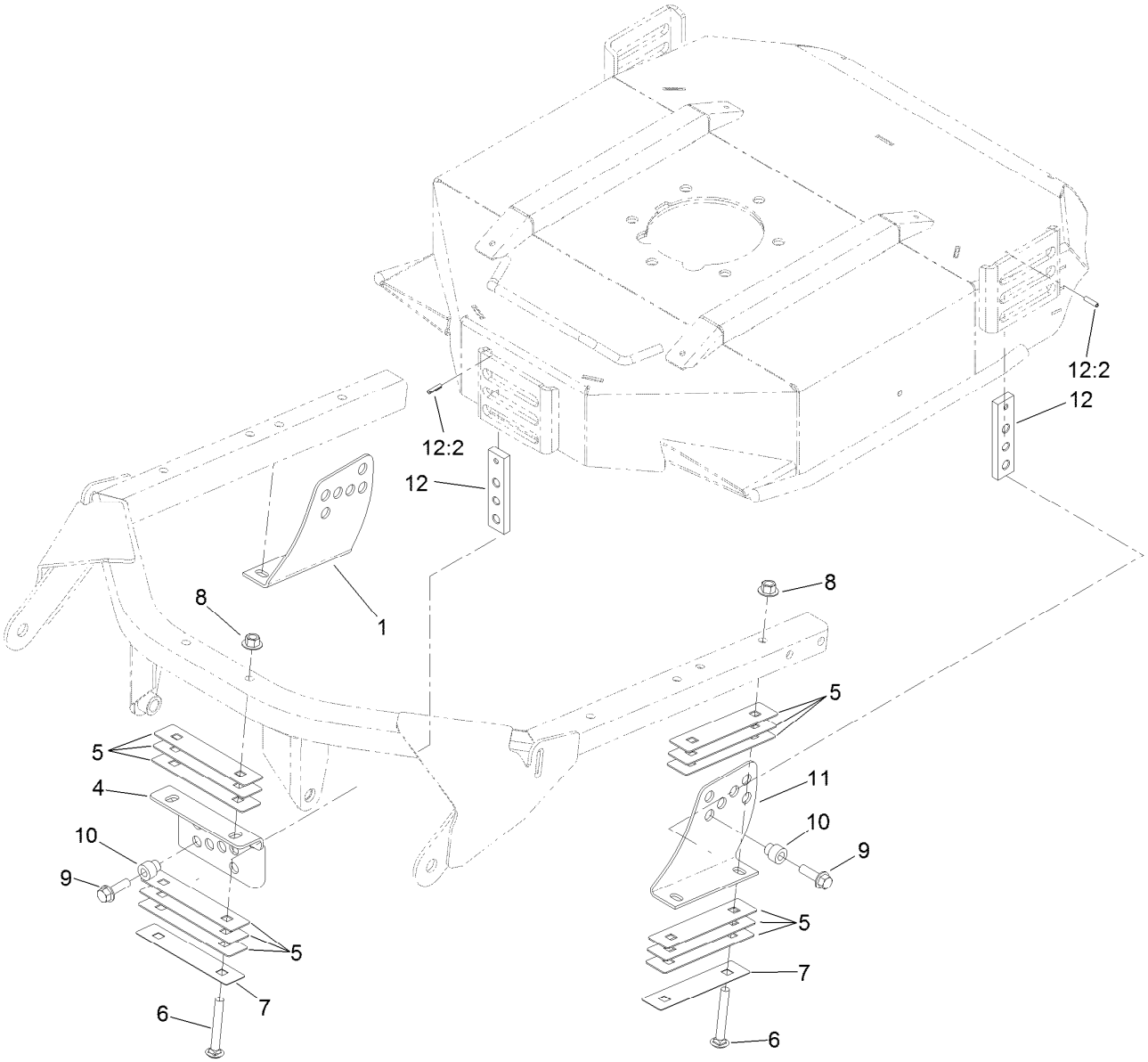


# Height-of-Cut Assembly

| *Ref.* | *Part Number* | *Qty.* | *Description* |
|---|---|---|---|
| 1 | 108-7391-03 | 1 | Bracket-HOC, RH |
| 4 | 104-1052-03 | 1 | Bracket-HOC, Front |
| 5 | 100-5799 | 18 | Shim-HOC, .060 Inch |
| 6 | 3231-9 | 6 | Screw-CARR |
| 7 | 104-4641 | 3 | Shim-HOC, .030 Inch |
| 8 | 32128-43 | 6 | Nut-Flange |
| 9 | 3234-24 | 3 | Screw-HHF |
| 10 | 105-9226 | 3 | Spacer-HOC |
| 11 | 108-7392-03 | 1 | Bracket-HOC,LH |
| 12 | 105-9225 | 3 | HOC Plate ASM |
| 12:2 | 32121-3 | 1 | Pin-Spring |

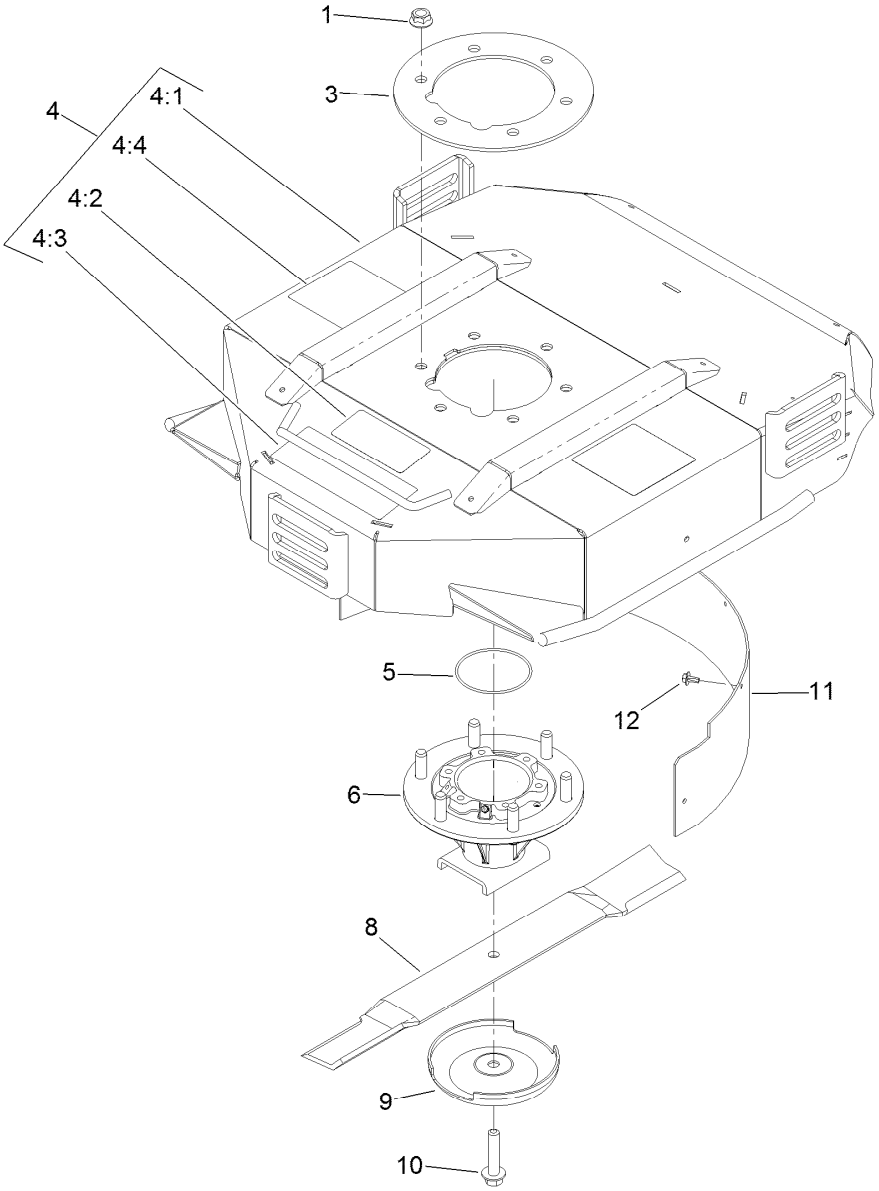


# Spindle, Blade and Chamber Assembly

| Ref. | Part Number | Qty. | Description |
|---|---|---|---|
| 1 | 32128-39 | 6 | Nut-HHF |
| 3 | 104-1051-03 | 1 | Plate-Spindle |
| 4 | 108-7373 | 1 | Chamber ASM |
| 4:1 | | 1 | Chamber ● |
| 4:2 | 93-7818 | 1 | Decal-Torque, Blade Bolt |
| 4:3 | 104-1086 | 1 | Decal-HOC |
| 4:4 | 117-4764 | 2 | Decal-Danger |
| 5 | 237-161 | 1 | O-Ring |
| 6 | 115-3435 | 1 | Spindle ASM |

| Ref. | Part Number | Qty. | Description |
|---|---|---|---|
| 8 | 108-7395-03 | 1 | Blade-Combo, 22In |
| 8 | 114-0434-03 | 1 | Blade-High Lift, 22In |
| 8 | 114-0435-03 | 1 | Blade-Atomic, 22In |
| 8 | 117-0209-03 | 1 | Blade-Angle Sail, 22In |
| 9 | 72-9361 | 1 | Cup-Scalp, Anti |
| 10 | 92-5816 | 1 | Bolt-Blade |
| 11 | 108-7409-01 | 1 | Baffle-Mulching |
| 12 | 46-8560 | 5 | Screw-HHFTF |

● Not serviced separately

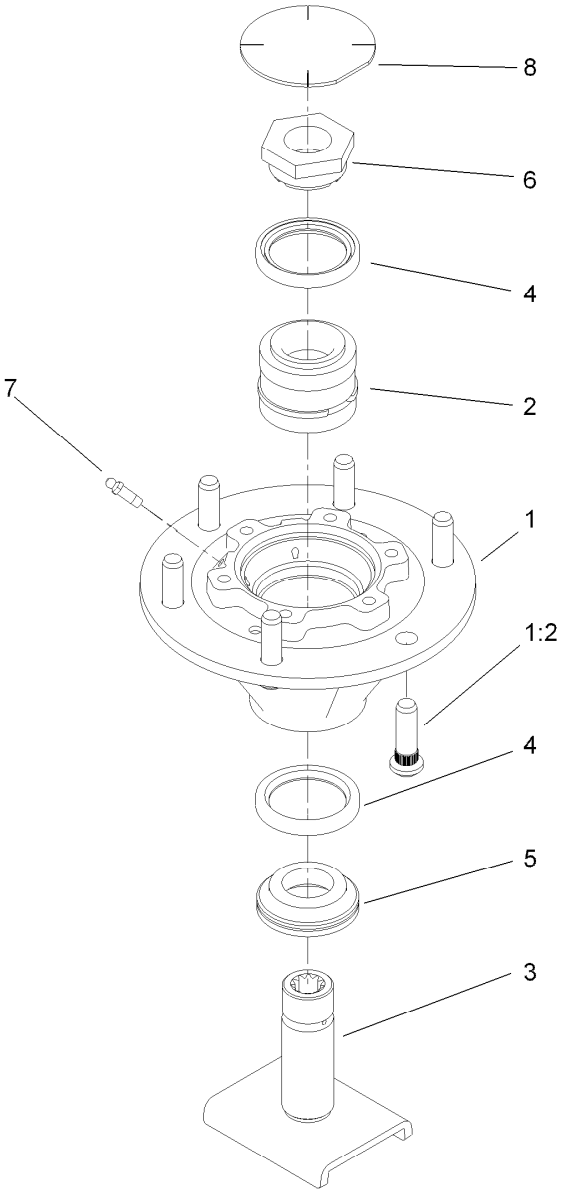


# Spindle Assembly No. 115-3435

| *Ref.* | *Part Number* | *Qty.* | *Description* |
|---|---|---|---|
| 1 | 115-3434 | 1 | Spindle |
| 1:2 | 10-6830 | 6 | Stud-Type, Drive |
| 2 | 100-5703 | 1 | Spacer And Bearing ASM |
| 3 | 100-5705 | 1 | Spindle Shaft ASM |
| 4 | 253-154 | 2 | Seal-Oil |
| 5 | 69-6950 | 1 | Spacer-Shaft, Spindle |
| 6 | 100-5709 | 1 | Nut-Spindle, Spcl |
| 7 | 302-62 | 2 | Fitting-Grease |
| 8 | 94-2703 | 1 | Plug |

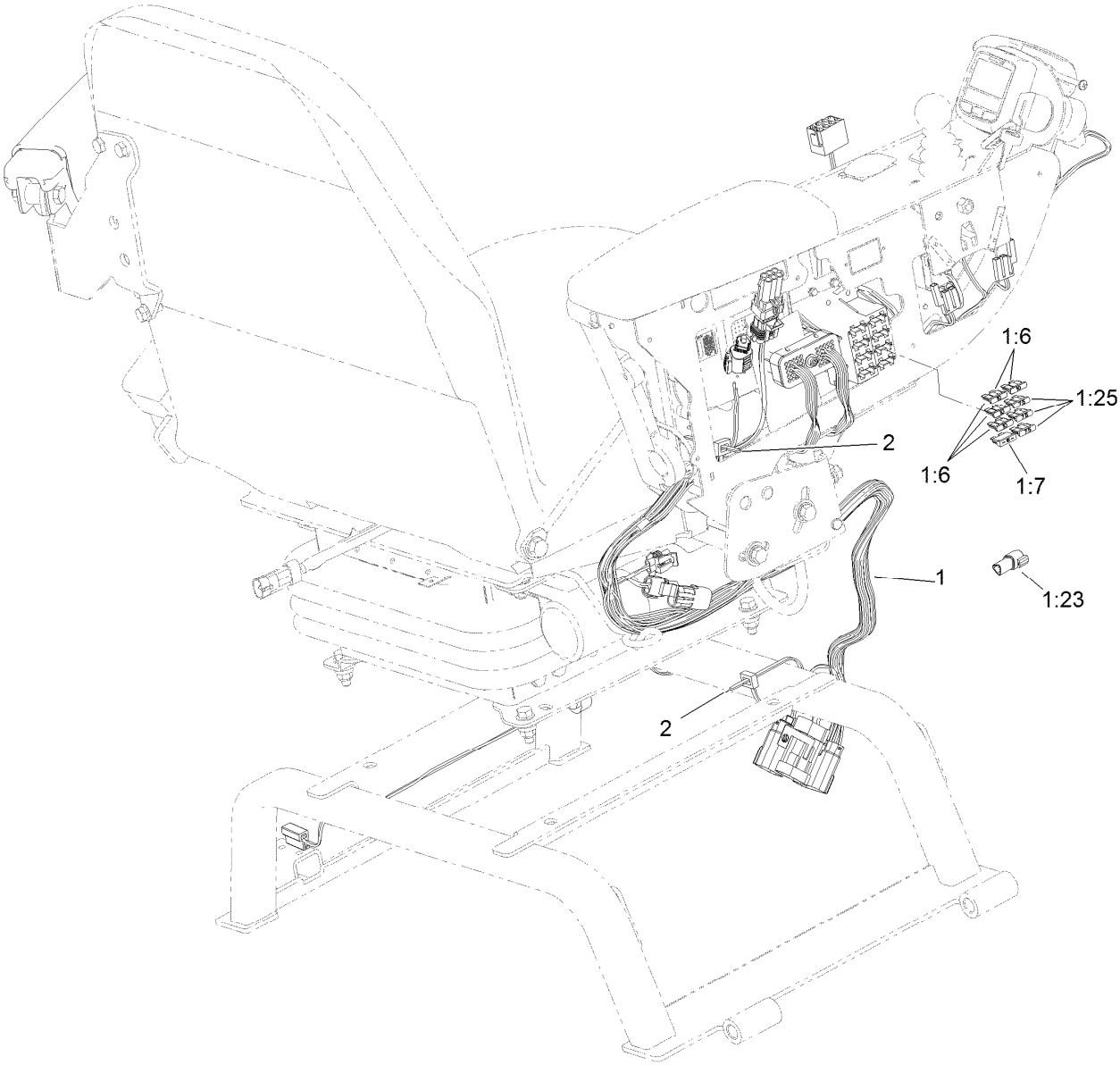


# Seat and Control Arm Wiring Harness Assembly

| *Ref.* | *Part Number* | *Qty.* | *Description* |
|---|---|---|---|
| 1 | 115-8081 | 1 | Harness-Wire, Seat |
| 1:6 | 218-578 | 3 | Fuse-Blade, 10 Amp |
| 1:7 | 109355 | 1 | Fuse-Blade, 15 Amp |
| 1:23 | 32180-043 | 1 | Resistor-120 Ohm |
| 1:25 | 114241 | 3 | Fuse-Blade, 7.5 Amp |
| 2 | 3290-378 | 3 | Tie-Cable |

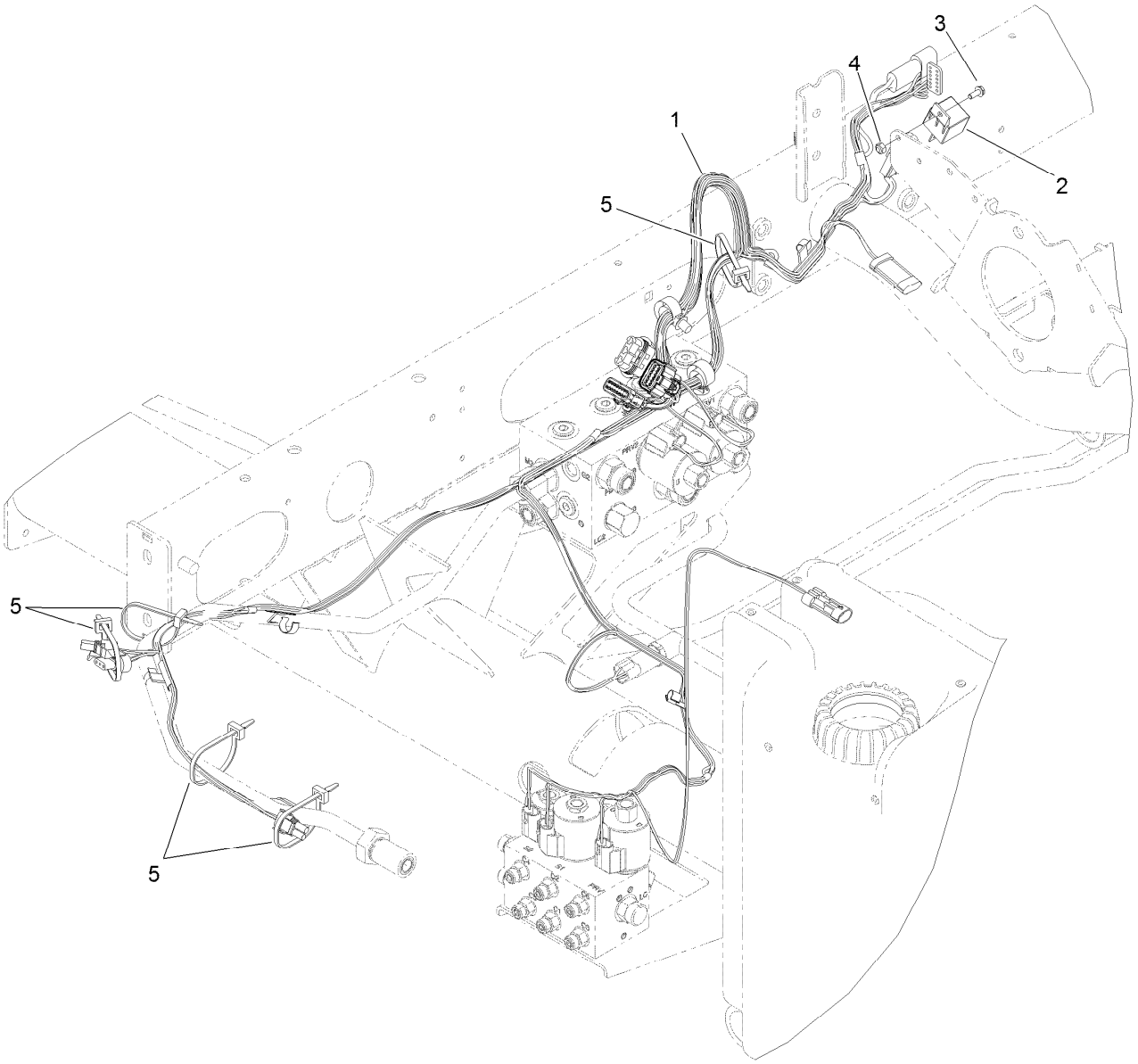


# Main Wiring Harness Assembly

| *Ref.* | *Part Number* | *Qty.* | *Description* |
|---|---|---|---|
| 1 | 120-6384 | 1 | Harness-Wire, Main |
| 2 | 99-7435 | 1 | Relay |
| 3 | 3290-321 | 1 | Screw-HWH |
| 4 | 3296-2 | 1 | Nut-Lock, NI |
| 5 | 3290-378 | 10 | Tie-Cable |

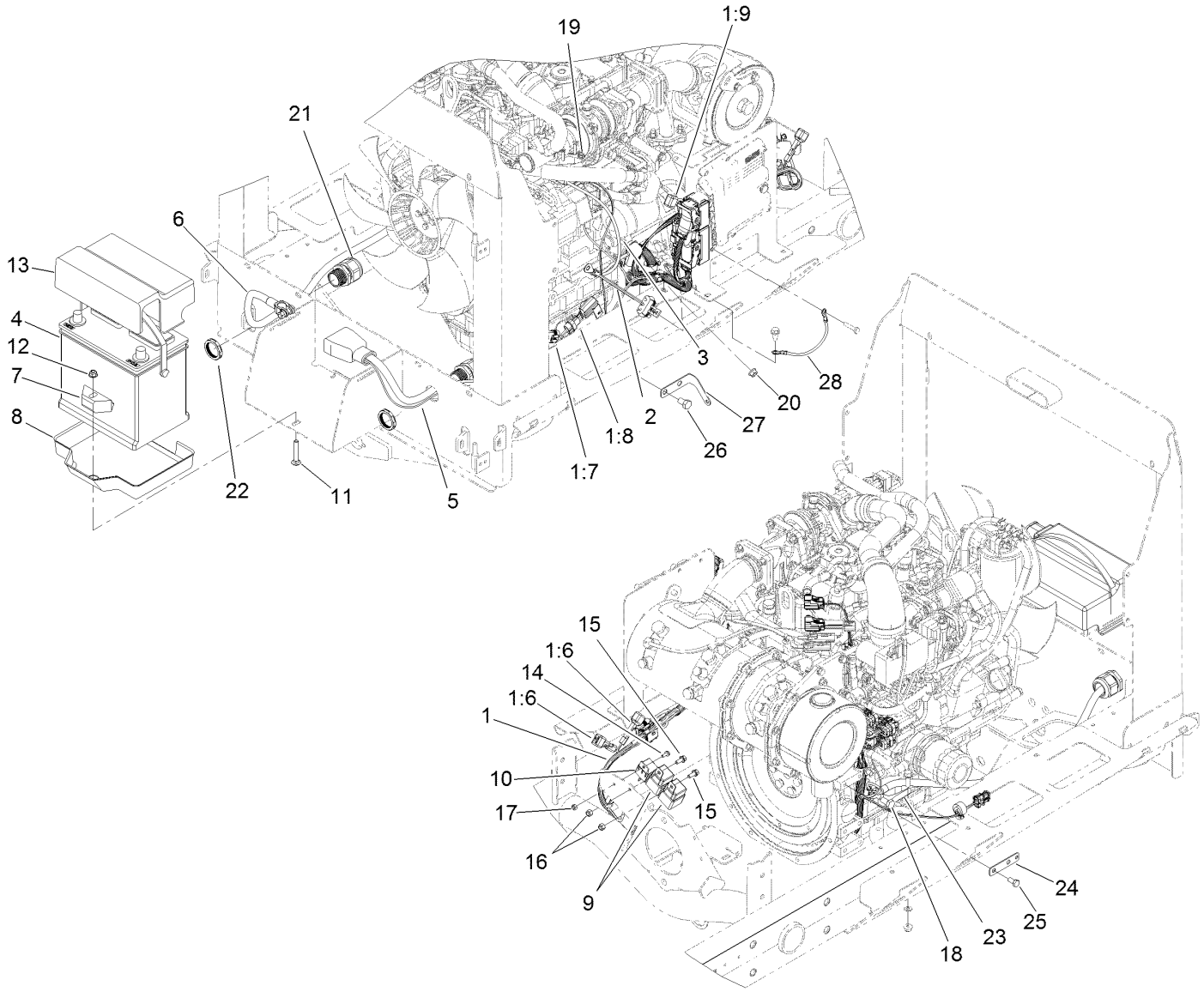


# Engine Wiring Harness and Battery Assembly

| Ref. | Part Number | Qty. | Description |
|---|---|---|---|
| 1 | 120-6355 | 1 | Harness-Wire, Engine |
| 1:6 | 100-4918 | 2 | Diode |
| 1:7 | 94-6710 | 1 | Fuse-2 Amp |
| 1:8 | 218-578 | 1 | Fuse-Blade, 10 Amp |
| 1:9 | 104-4022 | 1 | Resistor-75 Ohm |
| 2 | 99-3441 | 1 | Harness-Wire, Fusible Link |
| 3 | 100-5552 | 1 | Harness-Wire |
| 4 | 104-9979 | 1 | Battery |
| 5 | 121-8850 | 1 | Cable-Battery, Positive |
| 6 | 121-8851 | 1 | Cable-Battery, Negative |
| 7 | 66-2490 | 1 | Retainer-Battery |
| 8 | 99-3513 | 1 | Tray-Battery |
| 9 | 99-7430 | 2 | Relay-Mini |
| 10 | 99-7435 | 1 | Relay |
| 11 | 3230-6 | 1 | Bolt-CARR |
| 12 | 104-8300 | 1 | Nut-HF, NI |

| Ref. | Part Number | Qty. | Description |
|---|---|---|---|
| 13 | 121-5615 | 1 | Cover-Battery |
| 14 | 3290-321 | 1 | Screw-HWH |
| 15 | 3234-33 | 2 | Screw-HHF |
| 16 | 3296-42 | 2 | Nut-Lock, NI |
| 17 | 3296-2 | 1 | Nut-Lock, NI |
| 18 | 33115-020 | 1 | Screw-HH |
| 19 | 33003-00 | 1 | Nut-HF |
| 20 | 33004-00 | 1 | Nut-HF |
| 21 | 121-8854 | 2 | Grip-Cord |
| 22 | 121-8855 | 2 | Locknut-Grip, Cord |
| 23 | 121-8856 | 1 | Cable-Ground, Engine |
| 24 | 121-5636 | 1 | Tab-Harness |
| 25 | 33114-016 | 2 | Screw-HH |
| 26 | 33115-016 | 2 | Screw-HH |
| 27 | 121-6580 | 1 | Bracket-Harness |
| 28 | 122-0058 | 1 | Harness-Wire, Ground |

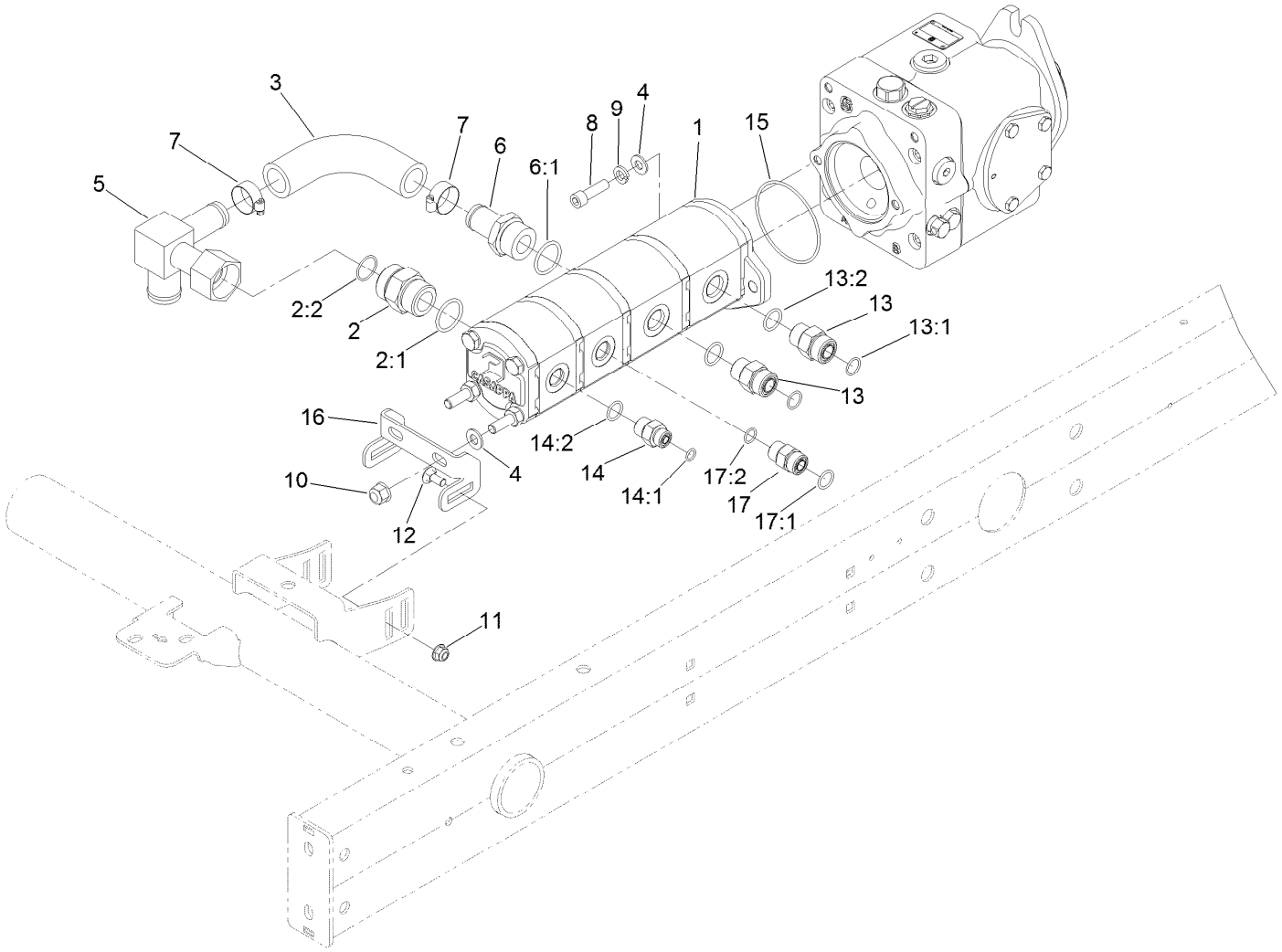


# Gear Pump Mounting Assembly

| Ref. | Part Number | Qty. | Description |
|---|---|---|---|
| 1 | 108-4003 | 1 | Gear Pump ASM |
| 2 | 104-3797 | 1 | Fitting-Straight |
| 2:1 | 237-146 | 1 | O-Ring |
| 2:2 | 340-65 | 1 | O-Ring |
| 3 | 108-1683 | 1 | Hose-Formed |
| 4 | 3256-24 | 4 | Washer-Flat |
| 5 | 108-1672 | 1 | Manifold-Tube |
| 6 | 354-78 | 1 | Fitting-STR |
| 6:1 | 237-146 | 1 | O-Ring |
| 7 | 2412-34 | 2 | Clamp-Hose |
| 8 | 3274-1 | 2 | Screw-HSH |
| 9 | 3253-5 | 2 | Washer-Lock |
| 10 | 103-9511 | 2 | Nut-Lock, NI |

| Ref. | Part Number | Qty. | Description |
|---|---|---|---|
| 11 | 104-8300 | 2 | Nut-HF, NI |
| 12 | 3230-1 | 2 | Bolt-CARR |
| 13 | 340-7 | 2 | Fitting-Straight |
| 13:1 | 237-65 | 1 | O-Ring |
| 13:2 | 237-80 | 1 | O-Ring |
| 14 | 340-3 | 1 | Fitting-Straight |
| 14:1 | 237-22 | 1 | O-Ring |
| 14:2 | 237-79 | 1 | O-Ring |
| 15 | 237-161 | 1 | O-Ring |
| 16 | 108-1801-01 | 1 | Bracket-Support, Pump |
| 17 | 340-4 | 1 | Fitting-Straight |
| 17:1 | 237-30 | 1 | O-Ring |
| 17:2 | 237-79 | 1 | O-Ring |

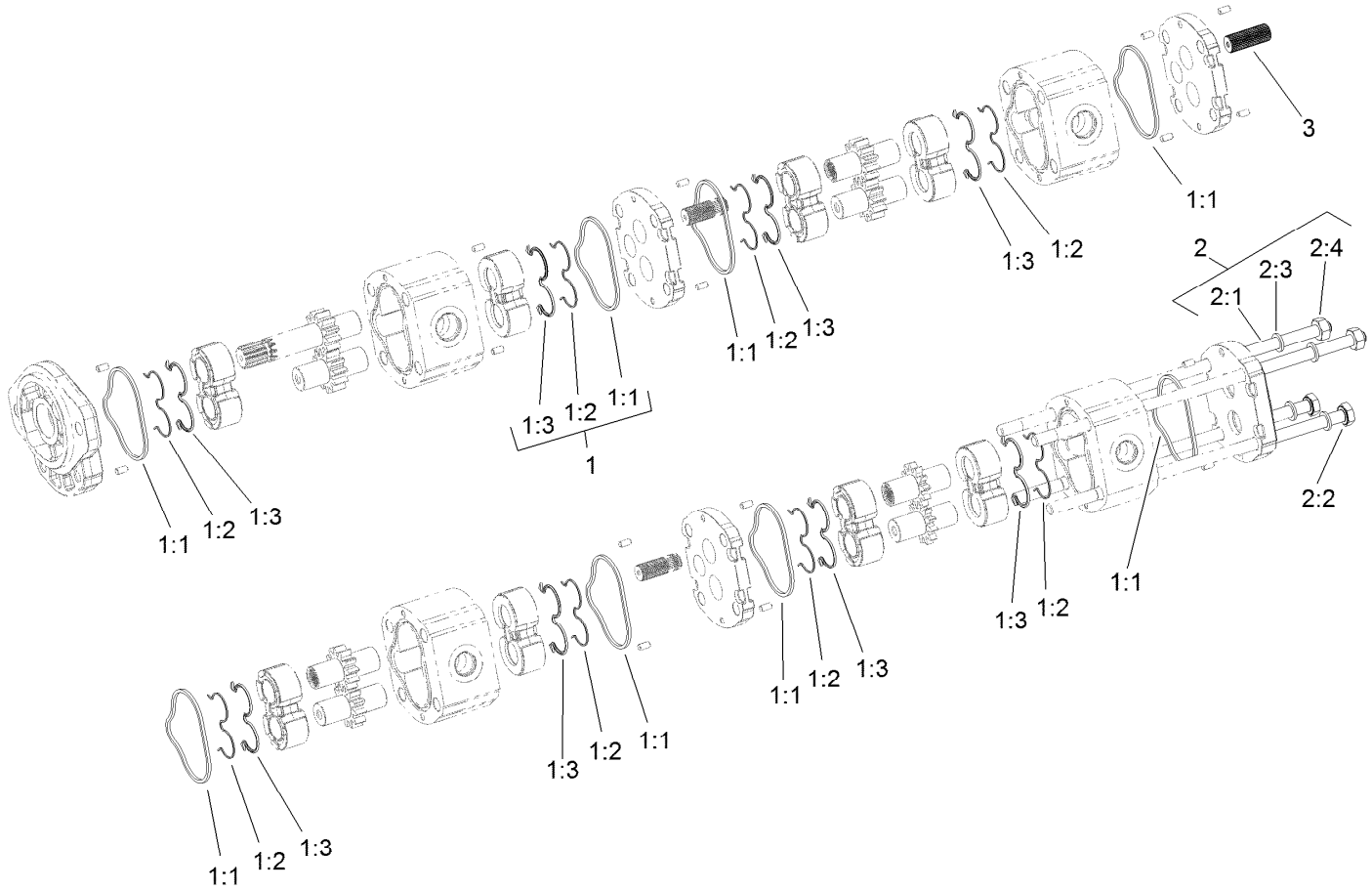


# Gear Pump Assembly No. 108-4003

| *Ref.* | *Part Number* | *Qty.* | *Description* |
|---|---|---|---|
| 1 | 108-4595 | 1 | Seal Kit |
| 1:1 | | 8 | Seal ● |
| 1:2 | | 8 | Seal ● |
| 1:3 | | 8 | Ring-Back Up ● |
| 2 | 120-6273 | 1 | Bolt Kit |
| 2:1 | | 2 | Stud Bolt ● |
| 2:2 | | 2 | Screw ● |
| 2:3 | | 4 | Washer ● |
| 2:4 | | 2 | Nut ● |
| 3 | 120-6284 | 3 | Hub-Connecting |

● Not serviced separately

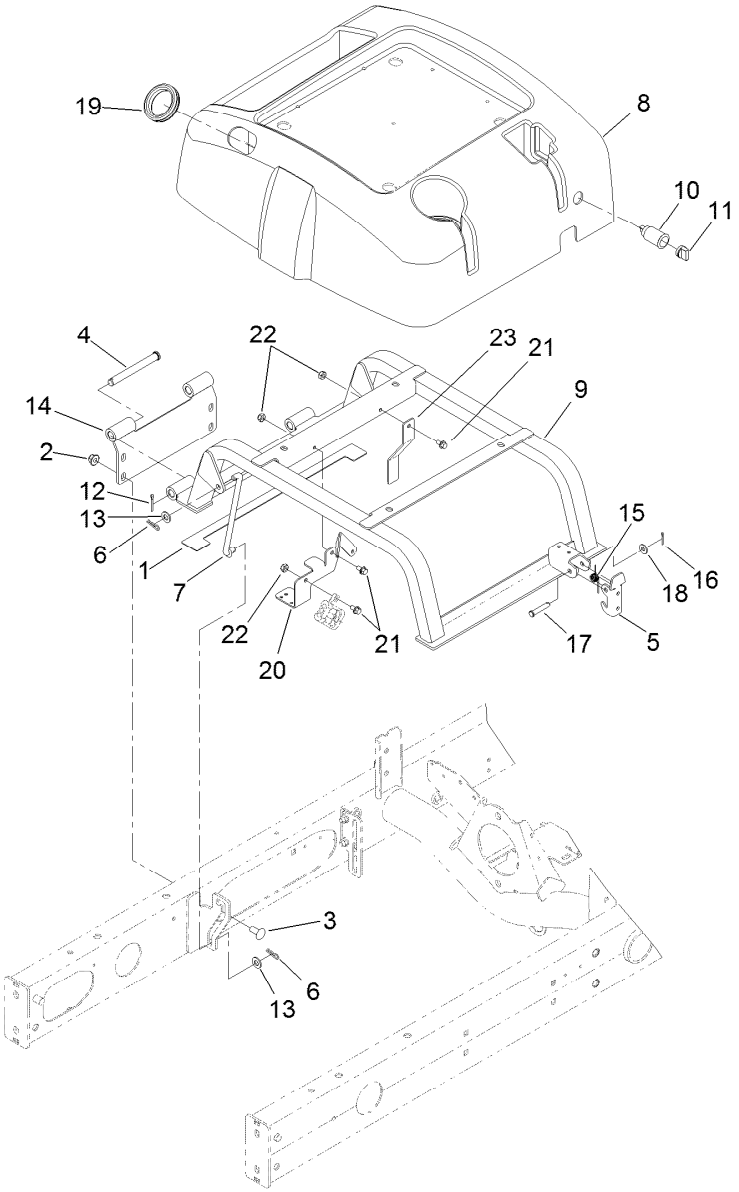


# Seat Base Assembly

| Ref. | Part Number | Qty. | Description |
|---|---|---|---|
| 1 | 110-5255 | 2 | Bumper-Base, Seat |
| 2 | 104-8301 | 4 | Nut-HF, NI |
| 3 | 3231-27 | 4 | Screw-CARR |
| 4 | 283-83 | 2 | Pin-Clevis |
| 5 | 110-8971 | 1 | Latch |
| 6 | 3290-307 | 4 | Pin-Cotter |
| 7 | 98-0917 | 2 | Rod-Prop |
| 8 | 108-1757 | 1 | Cover-Seatbase |
| 9 | 108-7577-03 | 1 | Seat Base |
| 10 | 99-7411 | 1 | Point-Power |
| 11 | 99-7416 | 1 | Cap |
| 12 | 3272-11 | 2 | Pin-Cotter |
| 13 | 3256-24 | 4 | Washer-Flat |
| 14 | 108-7582-03 | 1 | Plate-Pivot |
| 15 | 104-4821 | 1 | Spring-Torsion |
| 16 | 3272-6 | 1 | Pin-Cotter |
| 17 | 94-3829 | 1 | Pin-Clevis |
| 18 | 3256-2 | 1 | Washer-Flat |
| 19 | 240-12 | 1 | Grommet-Rubber |
| 20 | 119-6973-03 | 1 | Bracket-Harness |
| 21 | 3234-13 | 3 | Screw-HHF |
| 22 | 3296-16 | 3 | Nut-Lock, NI |
| 23 | 121-5603-03 | 1 | Bracket-Harness, Deflector |

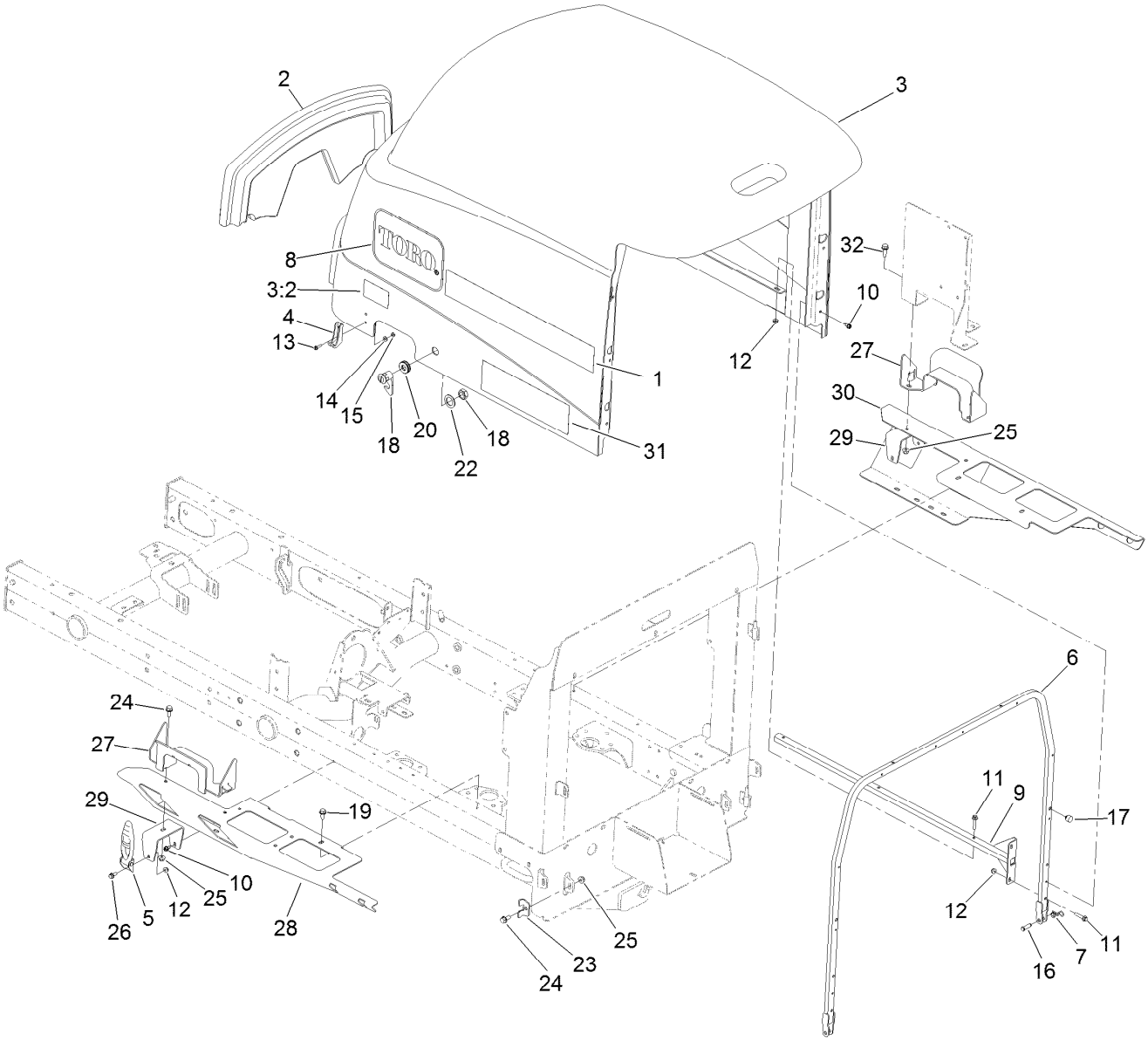


# Hood Assembly

| Ref. | Part Number | Qty. | Description |
|---|---|---|---|
| 1 | 117-0173 | 2 | Decal |
| 2 | 108-7587 | 1 | Saddle-Hood |
| 3 | 121-5616 | 1 | Hood ASM |
| 3:2 | 106-6754 | 1 | Decal-Danger |
| 4 | 103-2897 | 2 | Latch-Catch |
| 5 | 103-2898 | 2 | Latch-Rubber |
| 6 | 121-5566-03 | 1 | Frame-Hood |
| 7 | 105-7512 | 2 | Pin-Tie, Bow |
| 8 | 66-6140 | 2 | Decal |
| 9 | 108-1790-03 | 2 | Tube |
| 10 | 32104-17 | 12 | Screw-HWH |
| 11 | 3234-21 | 10 | Screw-HHF |
| 12 | 104-7201 | 12 | Nut-HF, NI |
| 13 | 32105-13 | 4 | Screw-HWH |
| 14 | 3256-14 | 4 | Washer-Flat |
| 15 | 3296-12 | 4 | Nut-Lock, NI |

| Ref. | Part Number | Qty. | Description |
|---|---|---|---|
| 16 | 283-61 | 2 | Pin-Yoke |
| 17 | 107-8042 | 2 | Bumper-Rubber |
| 18 | 98-5398 | 1 | Latch |
| 19 | 32104-32 | 5 | Screw-HWH |
| 20 | 104-1453 | 1 | Grommet |
| 22 | 99-4958 | 1 | Spacer |
| 23 | 110-8946 | 2 | Clamp-Frame, Radiator |
| 24 | 3234-5 | 4 | Screw-HHF |
| 25 | 104-8300 | 6 | Nut-HF, NI |
| 26 | 3234-33 | 2 | Screw-HHF |
| 27 | 121-5627-03 | 2 | Guide-Hood |
| 28 | 110-5253-01 | 1 | Adapter-Hood, LH |
| 29 | 110-5256-01 | 2 | Bracket-Latch, Hood |
| 30 | 110-5254-01 | 1 | Adapter-Hood, RH |
| 31 | 110-8859 | 2 | Decal |
| 32 | 3234-17 | 2 | Screw-HHF |

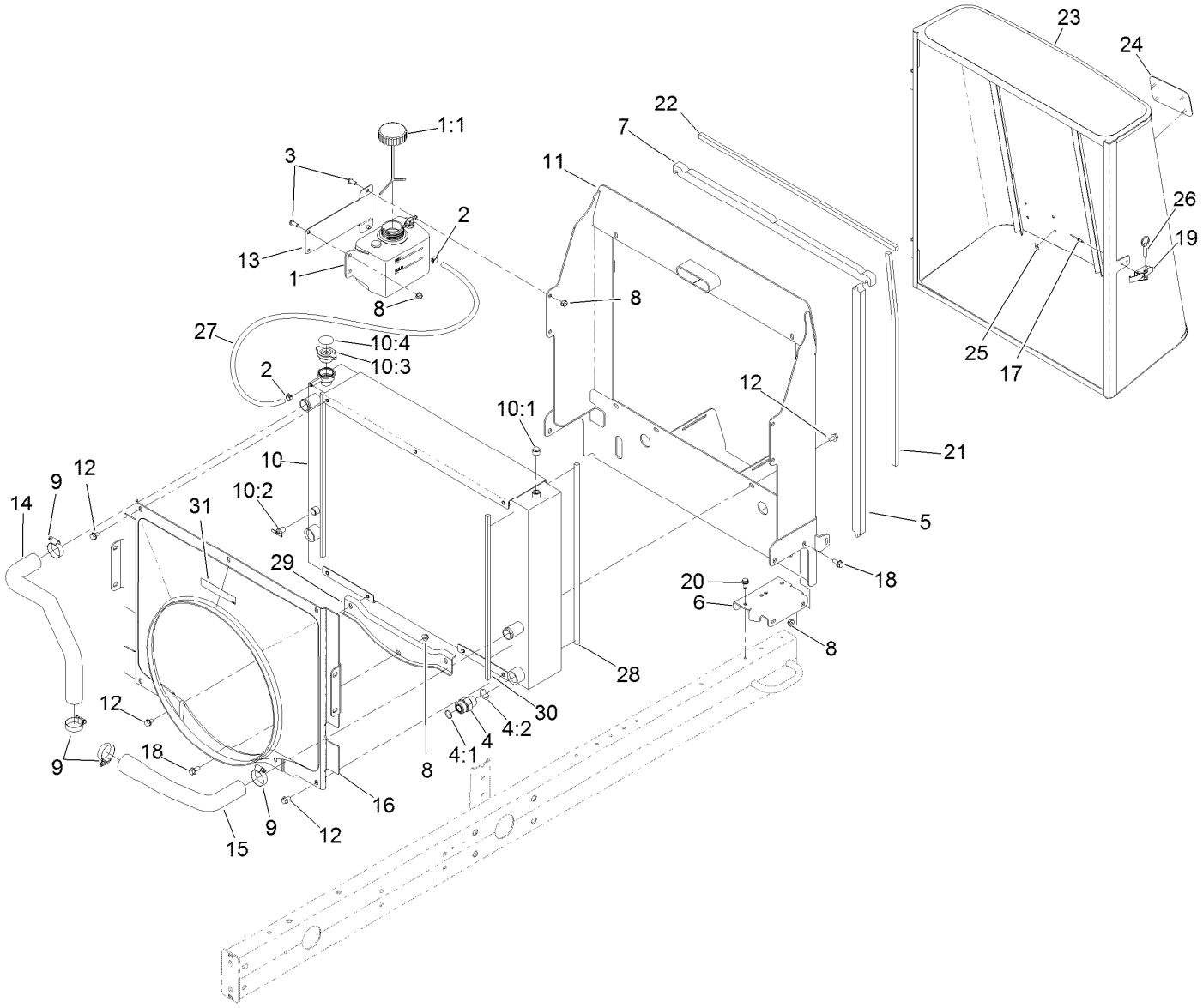


# Radiator and Shroud Assembly

| Ref. | Part Number | Qty. | Description |
|---|---|---|---|
| 1 | 120-5573 | 1 | Coolant Reservoir ASM |
| 1:1 | 87-7050 | 1 | Cap-Reservoir |
| 2 | 92-2379 | 2 | Clamp-Hose |
| 3 | 3274-55 | 5 | Screw-HSBH |
| 4 | 340-9 | 2 | Fitting-STR |
| 4:1 | 237-58 | 1 | O-Ring |
| 4:2 | 237-81 | 1 | O-Ring |
| 5 | 121-5554 | 2 | Seal-Foam |
| 6 | 110-5310-01 | 2 | Bracket-Mounting |
| 7 | 110-5276 | 2 | Seal-Foam |
| 8 | 104-8300 | 10 | Nut-HF, NI |
| 9 | 2412-3 | 4 | Clamp-Hose |
| 10 | 120-3840 | 1 | Oil Cooler And Radiator ASM |
| 10:1 | 281-13 | 1 | Plug-Pipe |
| 10:2 | 304-46 | 1 | Draincock |
| 10:3 | 93-5957 | 1 | Cap-Radiator |
| 10:4 | 106-6755 | 1 | Decal-Cap, Radiator |
| 11 | 120-3815-03 | 1 | Frame-Radiator |
| 12 | 3234-30 | 14 | Screw-HHF |

| Ref. | Part Number | Qty. | Description |
|---|---|---|---|
| 13 | 121-5568-03 | 1 | Braket-Resevoir |
| 14 | 121-5557 | 1 | Hose-Radiator, Upper |
| 15 | 121-5558 | 1 | Hose-Radiator, Lower |
| 16 | 125-2901 | 1 | Shroud-Fan, Turbo Diesel |
| 17 | 3269-15 | 2 | Rivet-Pop |
| 18 | 3234-5 | 5 | Screw-HHF |
| 19 | 115-1554 | 1 | Latch-Draw |
| 20 | 32104-32 | 6 | Screw-HWH |
| 21 | 121-5575 | 2 | Seal-Foam |
| 22 | 121-5576 | 1 | Seal-Foam |
| 23 | 120-3844-03 | 1 | Screen |
| 24 | 93-6028 | 1 | Plate-Logo |
| 25 | 94-2638 | 4 | Nut-Flat |
| 26 | 115-1556 | 1 | Pin-Ball, Detent |
| 27 | 110-8752 | 1 | Hose-Fuel |
| 28 | 110-0969 | 2 | Seal-Foam |
| 29 | 125-2905 | 1 | Cap-Shroud, Diesel |
| 30 | 125-8767 | 2 | Seal-Foam |
| 31 | 93-7272 | 1 | Decal-Warning |

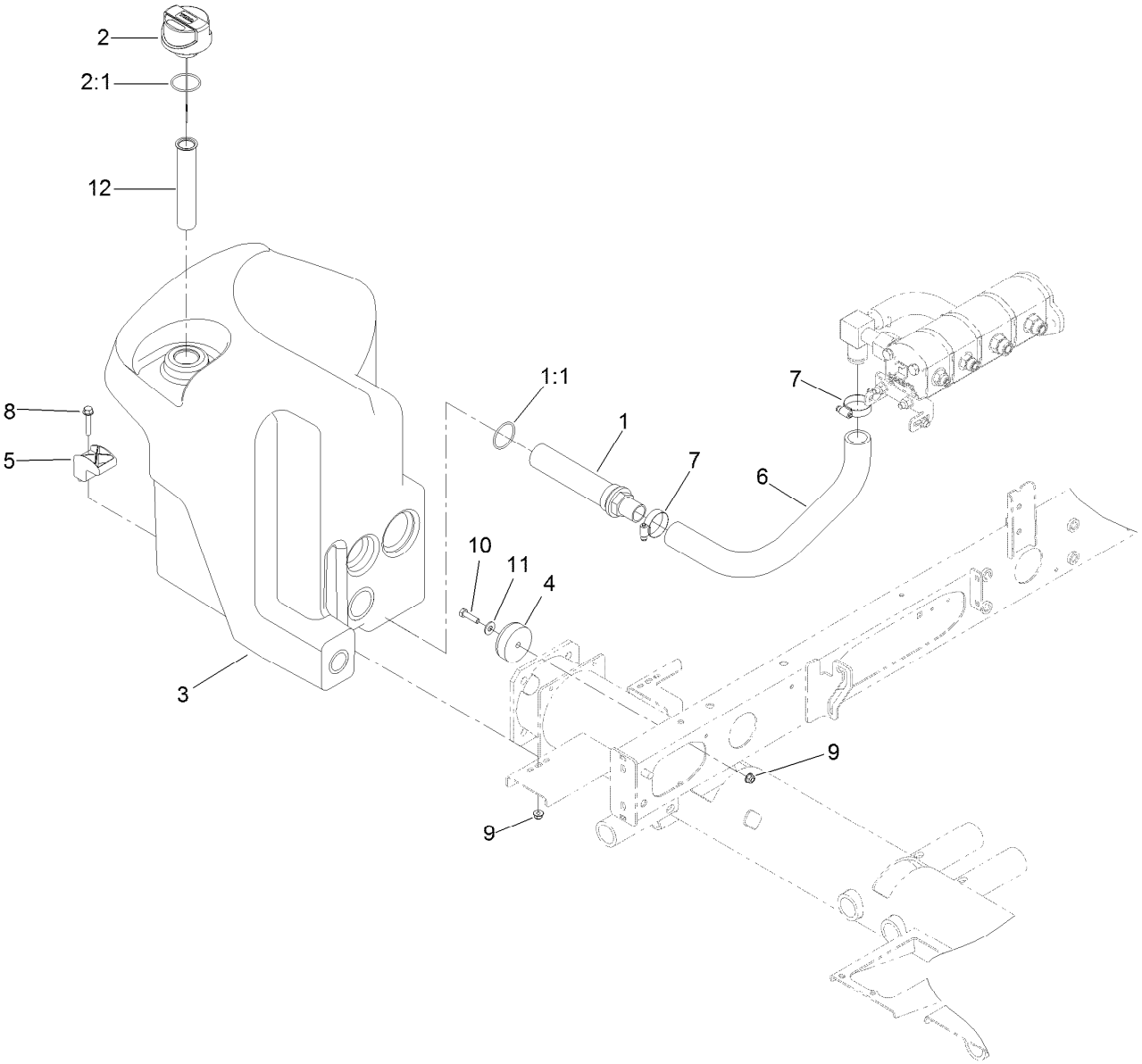


# Hydraulic Tank Assembly

| Ref. | Part Number | Qty. | Description |
|---|---|---|---|
| 1 | 105-0131 | 1 | Strainer-Tank, Oil |
| 1:1 | 340-136 | 1 | O-Ring |
| 2 | 117-0193 | 1 | Cap-Hydraulic, Vented Breather |
| 2:1 | 237-101 | 1 | O-Ring |
| 3 | 121-5587 | 1 | Tank-Hydraulic |
| 4 | 108-1605 | 1 | Bumper-Recess |
| 5 | 107-4543 | 2 | Clamp |
| 6 | 108-1685 | 1 | Hose-Formed |
| 7 | 2412-111 | 2 | Clamp-Hose, W/Liner |
| 8 | 94-5780 | 2 | Screw-HWH |
| 9 | 104-8300 | 3 | Nut-HF, NI |
| 10 | 322-6 | 1 | Screw-HH |
| 11 | 3256-3 | 1 | Washer-Flat |
| 12 | 61-2790 | 1 | Filter-Screen |

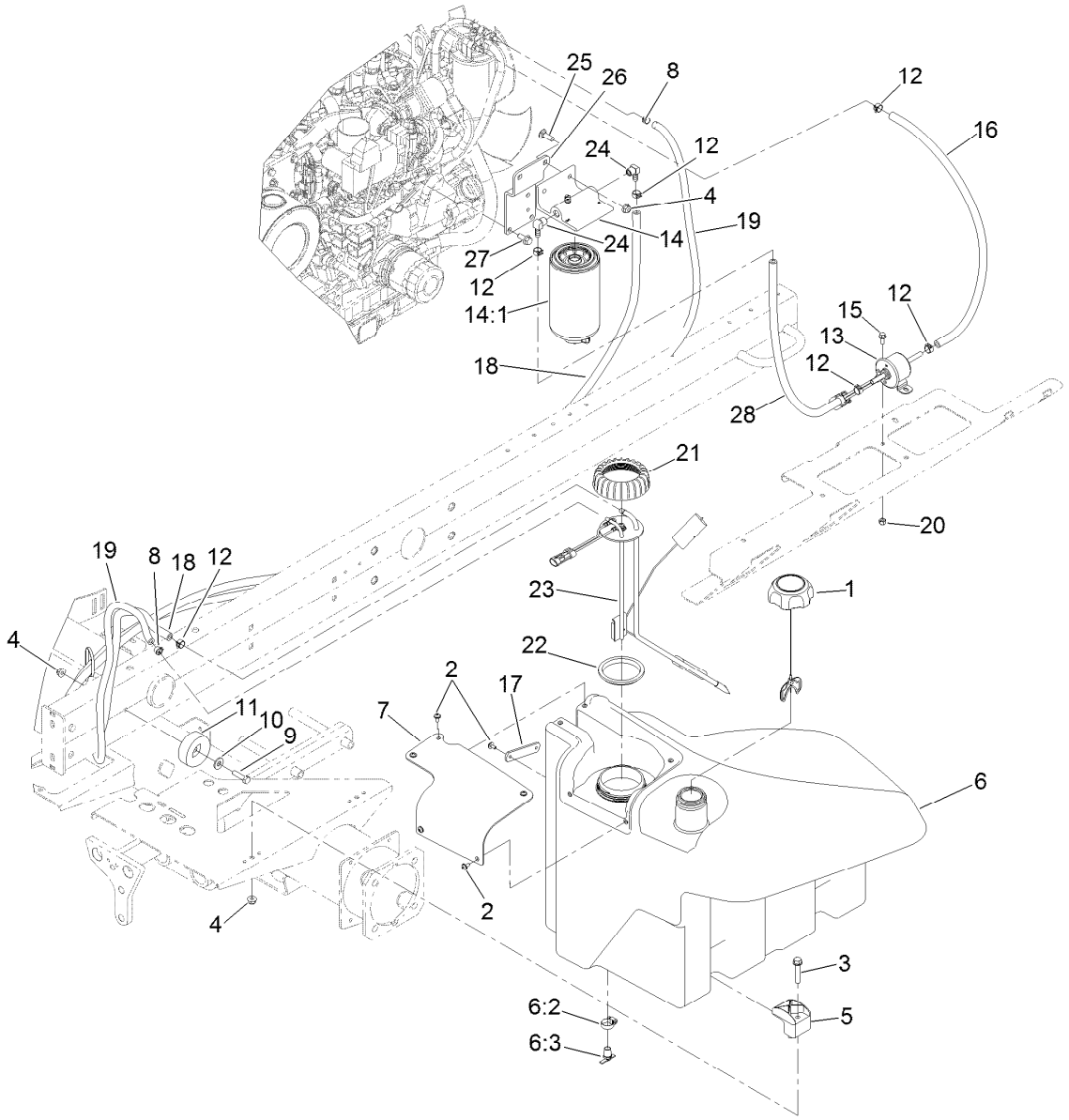


# Fuel System Assembly

| Ref. | Part Number | Qty. | Description |
|---|---|---|---|
| 1 | 125-9173 | 1 | Cap-Fuel, Diesel, Ultra Low Sulfur |
| 2 | 109-2661 | 7 | Screw-PPH |
| 3 | 94-5780 | 2 | Screw-HWH |
| 4 | 104-8300 | 5 | Nut-HF, NI |
| 5 | 107-4543 | 2 | Clamp |
| 6 | 125-2907 | 1 | Fuel Tank ASM |
| 6:2 | 2412-36 | 1 | Clamp-Hose |
| 6:3 | 304-46 | 1 | Draincock |
| 7 | 125-2903 | 1 | Cover-Pump/Sender |
| 8 | 2412-98 | 2 | Clamp-Hose |
| 9 | 322-6 | 1 | Screw-HH |
| 10 | 3256-3 | 1 | Washer-Flat |
| 11 | 108-1605 | 1 | Bumper-Recess |
| 12 | 92-2379 | 6 | Clamp-Hose |
| 13 | 121-5613 | 1 | Pump-Fuel, Electric |
| 14 | 125-2914 | 1 | Filter-Separator |
| 14:1 | 125-2915 | 1 | Filter-Fuel/Water Separator |
| 15 | 3234-33 | 2 | Screw-HHF |
| 16 | 109-0308 | 1 | Hose-Fuel |
| 17 | 125-2945 | 1 | Strap-Cable |
| 18 | 121-5608 | 1 | Hose-Fuel |
| 19 | 121-5614 | 1 | Hose-Fuel |
| 20 | 3296-42 | 2 | Nut-Lock, NI |
| 21 | 115-2162 | 1 | Cap-Pump, Fuel |
| 22 | 115-2163 | 1 | Gasket-Pump, Fuel |
| 23 | 121-5642 | 1 | Sender-Fuel |
| 24 | 353-781 | 2 | Fitting-HYD, 90 |
| 25 | 3230-2 | 2 | Bolt-CARR |
| 26 | 120-6299-03 | 1 | Bracket-Separator |
| 27 | 33104-020 | 3 | Screw-HHF |
| 28 | 109-0274 | 1 | Hose-Fuel |

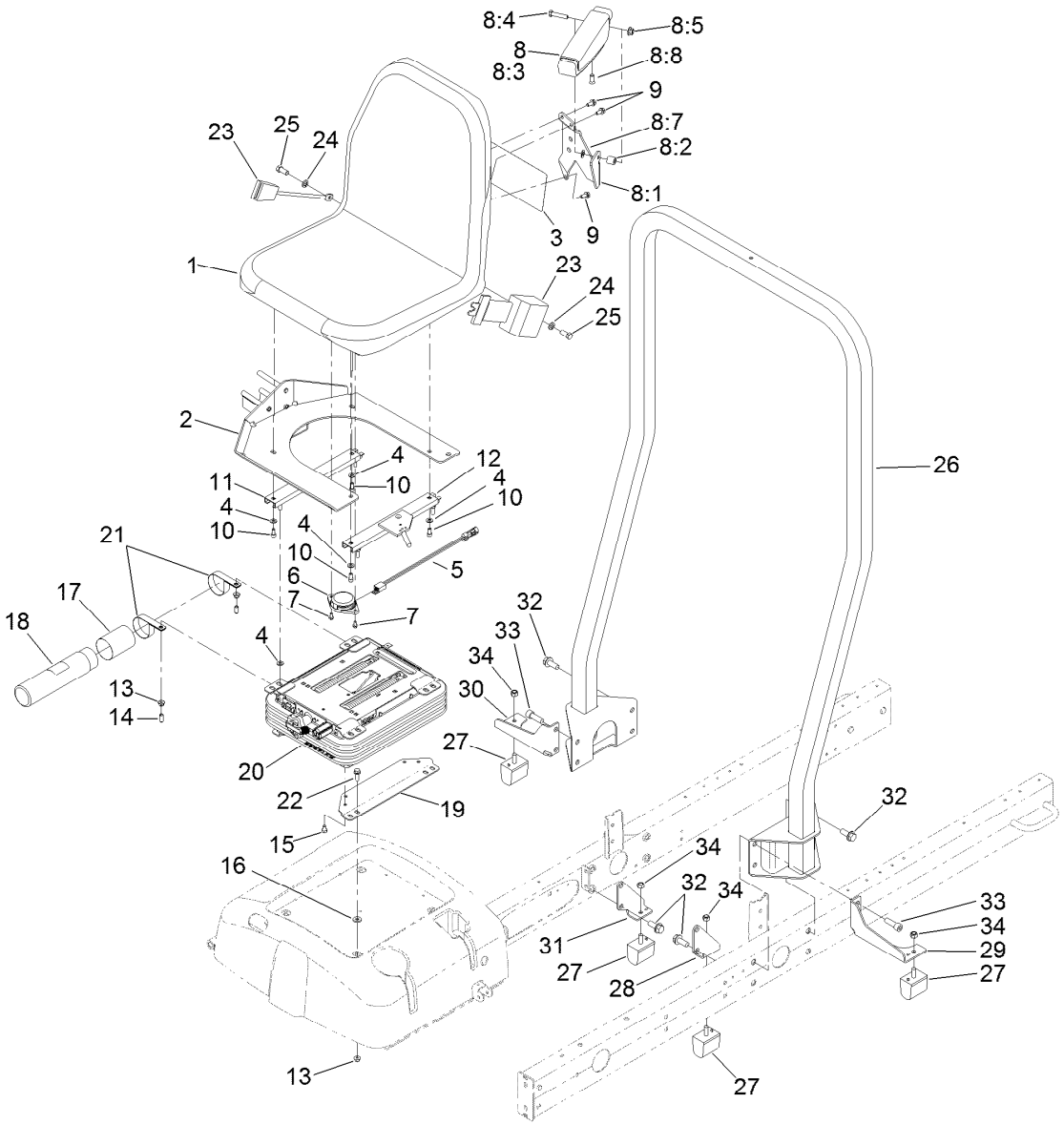


# Seat Mount Assembly

| Ref. | Part Number | Qty. | Description |
|---|---|---|---|
| 1 | 104-4620 | 1 | Seat |
| 2 | 125-2900-03 | 1 | Mount-Seat |
| 3 | 117-0168 | 1 | Decal-Service |
| 4 | 3256-23 | 8 | Washer-Plain |
| 5 | 108-8657 | 1 | Harness-Wire, Seat |
| 6 | 92-6282 | 1 | Switch-Seat |
| 7 | 9266714 | 2 | Screw-HWH |
| 8 | 92-7307 | 1 | LH Armrest ASM |
| 8:1 | 69-0760 | 1 | Bracket-Arm, LH |
| 8:2 | 92-7301 | 1 | Spacer |
| 8:3 | 69-1180 | 1 | Armrest |
| 8:4 | 323-9 | 1 | Screw-HH |
| 8:5 | 32128-19 | 1 | Nut-HF Lock,Large Flg |
| 8:7 | 3256-24 | 1 | Washer-Flat |
| 8:8 | 92-7318 | 1 | Screw |
| 9 | 3234-14 | 3 | Screw-HHF |
| 10 | 3274-12 | 4 | Screw-HSH |
| 11 | 92-8990 | 1 | Adjuster-Seat, Non-Locking |
| 12 | 92-8991 | 1 | Adjuster (W/Latch) |
| 13 | 104-8300 | 8 | Nut-HF, NI |
| 14 | 94-2782 | 4 | Cap-Wire, Lite |

| Ref. | Part Number | Qty. | Description |
|---|---|---|---|
| 15 | 48-7680 | 4 | Screw-HH |
| 16 | 71-9310 | 4 | Spacer |
| 17 | 104-7048 | 1 | Cap-Housing |
| 18 | 104-7050 | 1 | Tube-Manual |
| 19 | 108-6590-03 | 2 | Bracket-Seat, Lower |
| 20 | 110-8851 | 1 | Mechanical Suspension ASM |
| 21 | 2412-133 | 2 | Clamp-R |
| 22 | 3234-17 | 4 | Screw-HHF |
| 23 | 100-4928 | 1 | Belt-Seat |
| 24 | 3253-6 | 2 | Washer-Lock |
| 25 | 3212-4 | 2 | Screw-HH |
| 26 | 110-8920 | 1 | ROPS ASM |
| 27 | 87-3470 | 4 | Bumper |
| 28 | 117-0183-03 | 1 | Bracket-Bumper, LH |
| 29 | 117-0184-03 | 1 | Bracket-Bumper, LH |
| 30 | 117-0233-03 | 1 | Bracket-Bumper, RH |
| 31 | 117-0234-03 | 1 | Bracket-Bumper, RH |
| 32 | 3234-38 | 8 | Screw-HHF |
| 33 | 3274-4 | 4 | Screw-HSH |
| 34 | 33025-00 | 4 | Nut-Lock, NI |

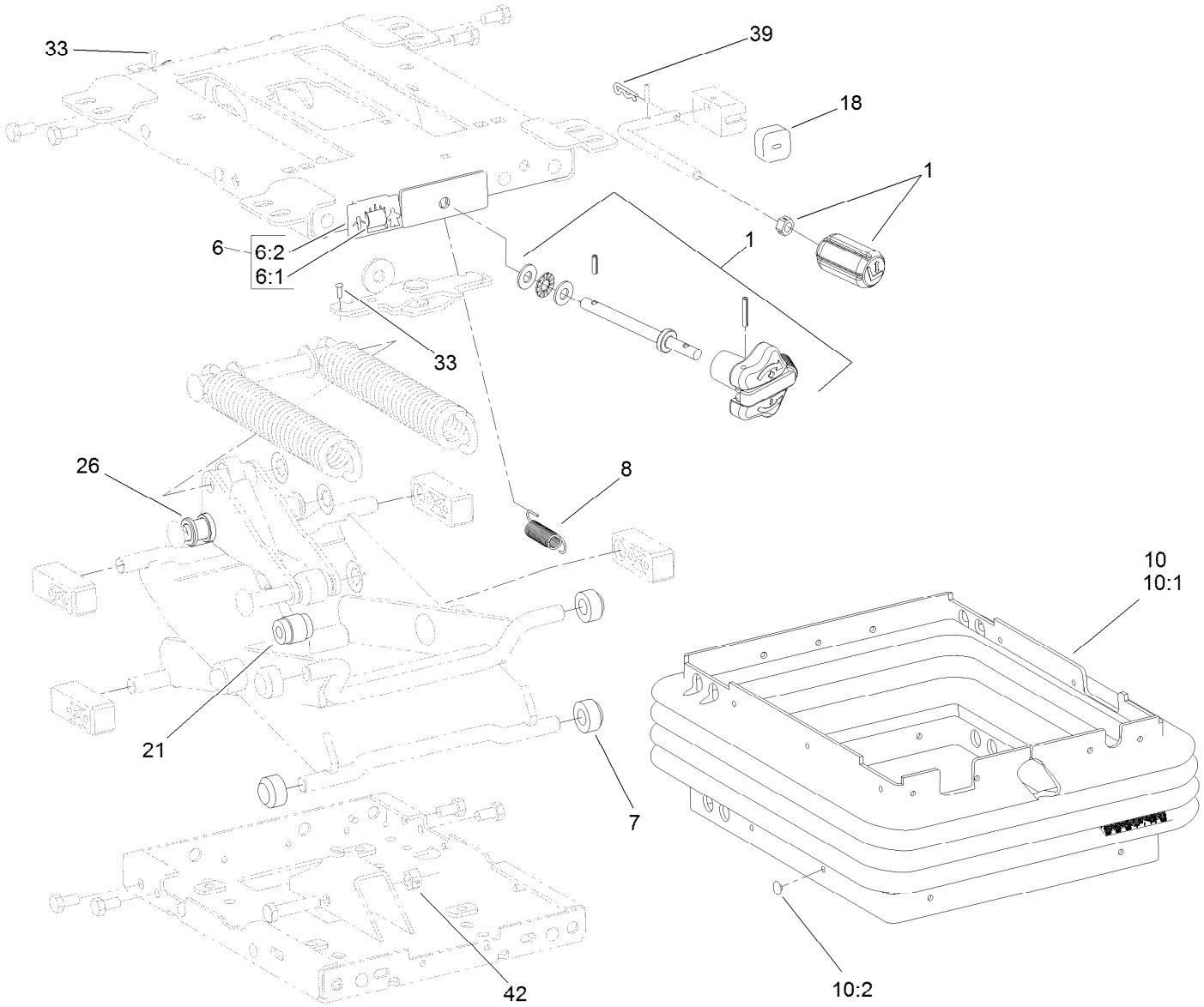


# Mechanical Seat Suspension Assembly No. 110-8851

| Ref. | Part Number | Qty. | Description |
|---|---|---|---|
| 1 | 119-8040 | 1 | Knobs Service Kit |
| 6 | 108-4584 | 1 | Weight Indicator Service Kit |
| 6:1 | | 1 | Tape-Weight Adjust ● |
| 6:2 | | 1 | Guide-Weight Adjust ● |
| 7 | 108-9632 | 4 | Roller |
| 8 | 108-9633 | 1 | Spring-Extension |
| 10 | 112-0164 | 1 | Boot Kit |
| 10:1 | | 1 | Boot-Suspension ● |
| 10:2 | 108-9641 | 21 | Clip-Plug |
| 18 | 108-9634 | 1 | Bumper |
| 21 | 108-9614 | 1 | Damper |
| 26 | 108-9622 | 2 | Tube |
| 33 | 3269-16 | 2 | Rivet |
| 39 | 3272-9 | 1 | Pin-Cotter |
| 42 | 32152-2 | 1 | Nut-Lock, Cone |

● Not serviced separately

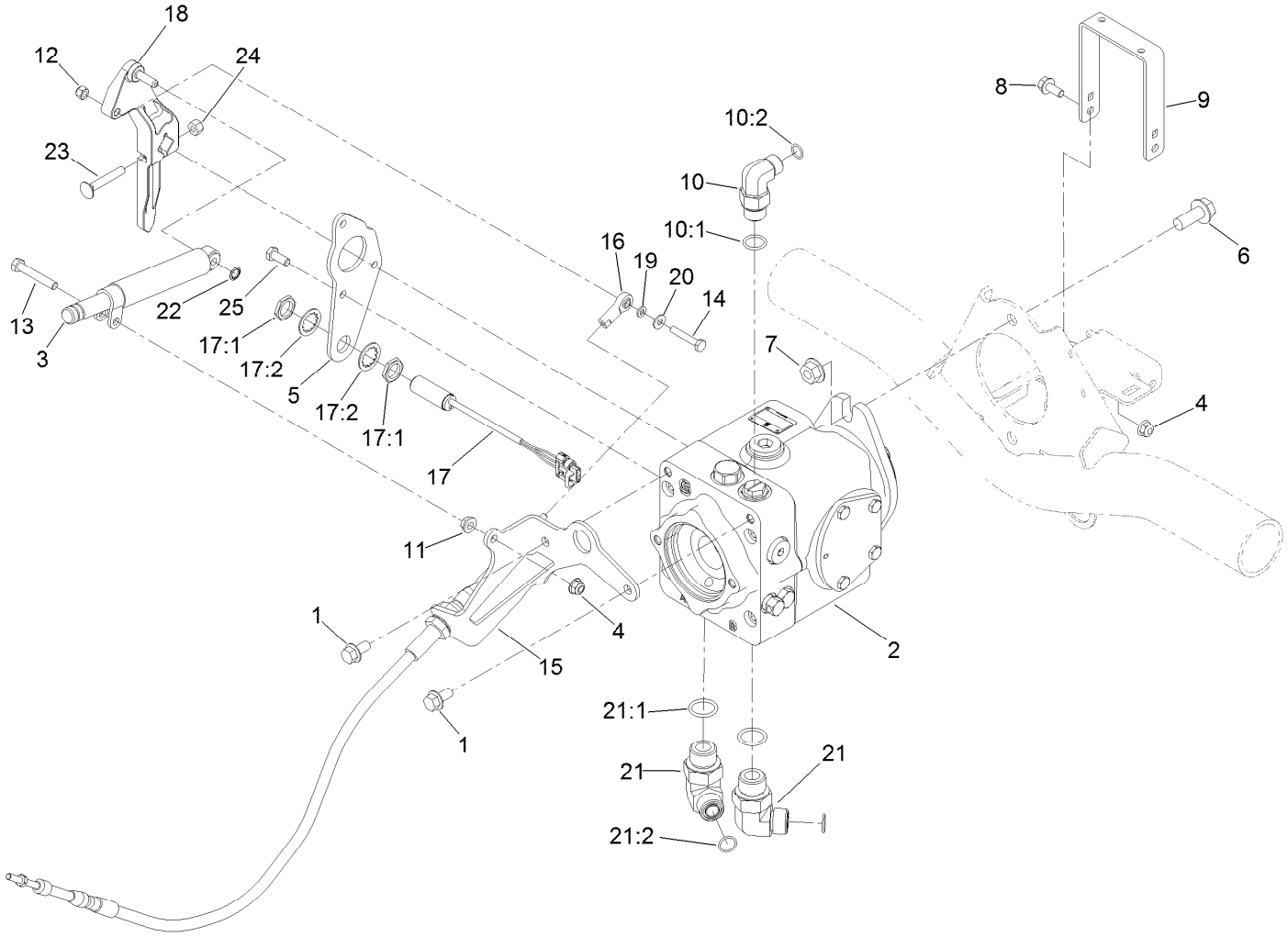


# Traction Pump Assembly

| Ref. | Part Number | Qty. | Description |
|---|---|---|---|
| 1 | 3234-1 | 2 | Screw-HHF |
| 2 | 119-6972 | 1 | Variable Hydraulic Pump ASM |
| 3 | 76-8870 | 1 | Damper-Lever |
| 4 | 104-8300 | 3 | Nut-HF, NI |
| 5 | 119-6971-03 | 1 | Plate-Pump |
| 6 | 3234-38 | 2 | Screw-HHF |
| 7 | 32128-49 | 2 | Nut-HHF |
| 8 | 3234-5 | 2 | Screw-HHF |
| 9 | 108-1799-03 | 1 | Hoop-Guard |
| 10 | 340-105 | 1 | Fitting-Elbow, 90 DEG |
| 10:1 | 237-80 | 1 | O-Ring |
| 10:2 | 237-30 | 1 | O-Ring |
| 11 | 32128-20 | 1 | Nut-HF |
| 12 | 3296-42 | 1 | Nut-Lock, NI |
| 13 | 322-10 | 1 | Screw-HH |

| Ref. | Part Number | Qty. | Description |
|---|---|---|---|
| 14 | 321-9 | 1 | Screw-HH |
| 15 | 110-5323-03 | 1 | Bracket |
| 16 | 2411-41 | 1 | Rod End-Ball Joint |
| 17 | 115-5300 | 1 | Proximity Switch ASM |
| 17:1 | 117-3207 | 2 | Nut-Hex |
| 17:2 | 117-3208 | 2 | Washer-Lock, Internal Tooth |
| 18 | 117-0265 | 1 | Lever-Pump |
| 19 | 33093-00 | 1 | Washer-Flat |
| 20 | 3256-22 | 1 | Washer-Flat |
| 21 | 340-139 | 2 | Fitting-Elbow 90 |
| 21:1 | 237-81 | 1 | O-Ring |
| 21:2 | 237-65 | 1 | O-Ring |
| 22 | 32151-72 | 1 | Ring-Retaining |
| 23 | 3230-6 | 1 | Bolt-CARR |
| 24 | 3296-29 | 1 | Nut-Lock, NI |
| 25 | 33114-020 | 3 | Screw-HH |

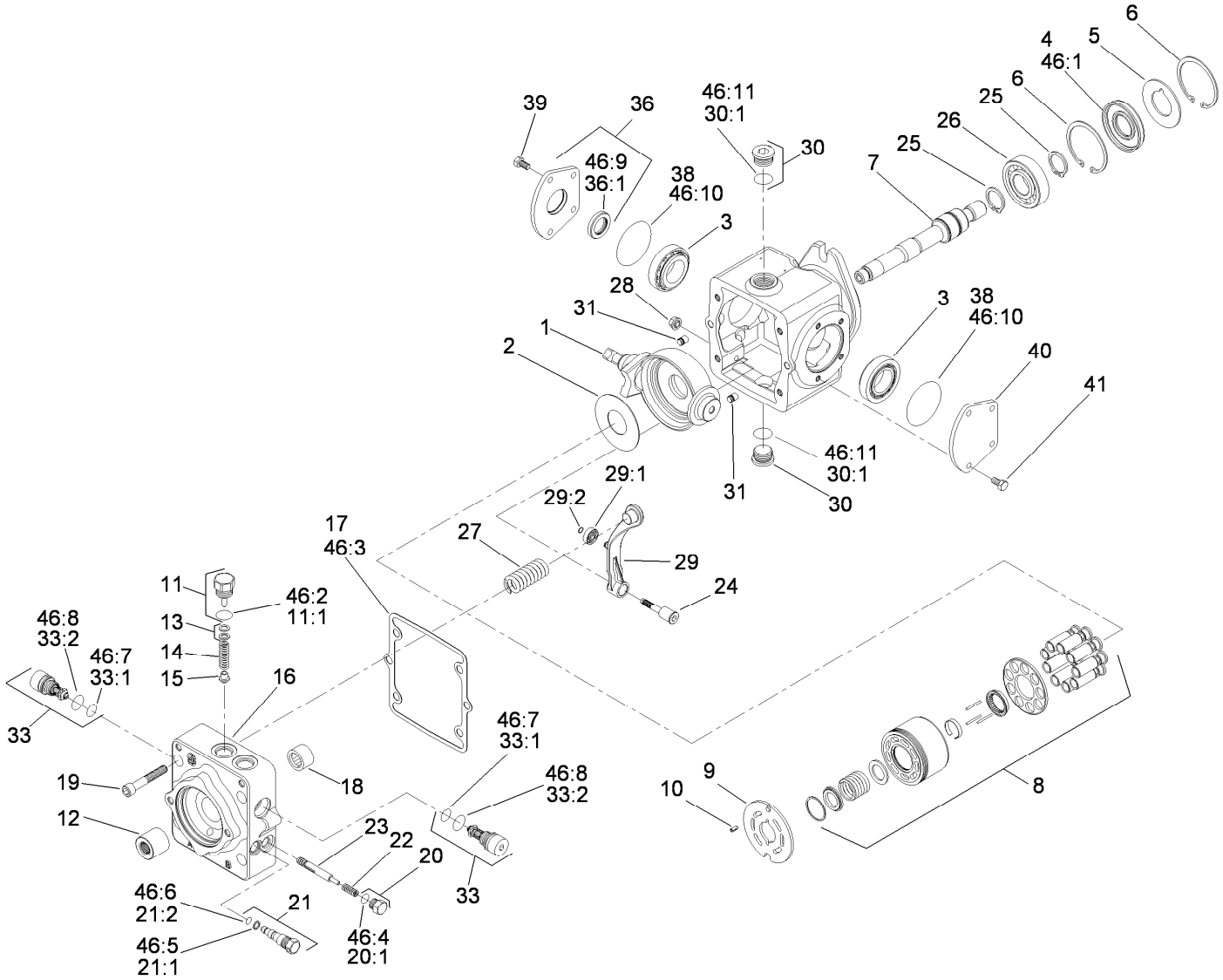


# Hydraulic Pump Assembly No. 119-6972

| Ref. | Part Number | Qty. | Description |
|---|---|---|---|
| 1 | 115-8092 | 1 | Swashplate |
| 2 | 75-0400 | 1 | Plate-Thrust |
| 3 | 110-6483 | 2 | Bearing Kit |
| 4 | 110-6471 | 1 | Seal-Lip |
| 5 | 95-4400 | 1 | Washer-Backup |
| 6 | 69-3200 | 2 | Ring-Retaining |
| 7 | 110-6484 | 1 | Shaft-Auxiliary |
| 8 | 110-6472 | 1 | Cylinder Block Kit ASM |
| 9 | 110-6473 | 1 | Plate-Valve (Clockwise) |
| 10 | 110-6485 | 1 | Pin-Slotted |
| 11 | 110-6486 | 1 | Plug-Relief, Charge |
| 11:1 | 28-3570 | 1 | O-Ring |
| 12 | 110-6480 | 1 | Coupling |
| 13 | 92-1353 | 1 | Shim Kit |
| 14 | 110-6474 | 1 | Spring |
| 15 | 110-6475 | 1 | Poppet |
| 16 | 115-8087 | 1 | Cap-End |
| 17 | 110-6476 | 1 | Gasket-Cap, End |

| Ref. | Part Number | Qty. | Description |
|---|---|---|---|
| 18 | 75-0500 | 1 | Bearing-Needle |
| 19 | 110-6489 | 4 | Screw |
| 20 | 94-9415 | 2 | Plug ASM |
| 20:1 | | 1 | O-Ring ■ |
| 21 | 107-4364 | 1 | Bypass Valve ASM |
| 21:1 | 25-2630 | 1 | Ring-Back Up |
| 21:2 | 110-6498 | 1 | O-Ring |
| 22 | 110-6491 | 2 | Spring |
| 23 | 110-6492 | 1 | Spool-Loop, Flush |
| 24 | 110-6493 | 1 | Pivot-Return, Neutral |
| 25 | 69-3170 | 2 | Ring-Retaining |
| 26 | 75-0460 | 1 | Bearing-Ball |
| 27 | 115-8085 | 1 | Spring-Neutral Return |
| 28 | 110-6496 | 1 | Nut-Seal |
| 29 | 110-6497 | 1 | Neutral Return Arm ASM |
| 29:1 | 110-6494 | 1 | Bearing-Cam |
| 29:2 | 110-3056 | 1 | Ring-Retaining |
| 30 | 69-3130 | 2 | Plug |

● Not illustrated

■ Not serviced separately

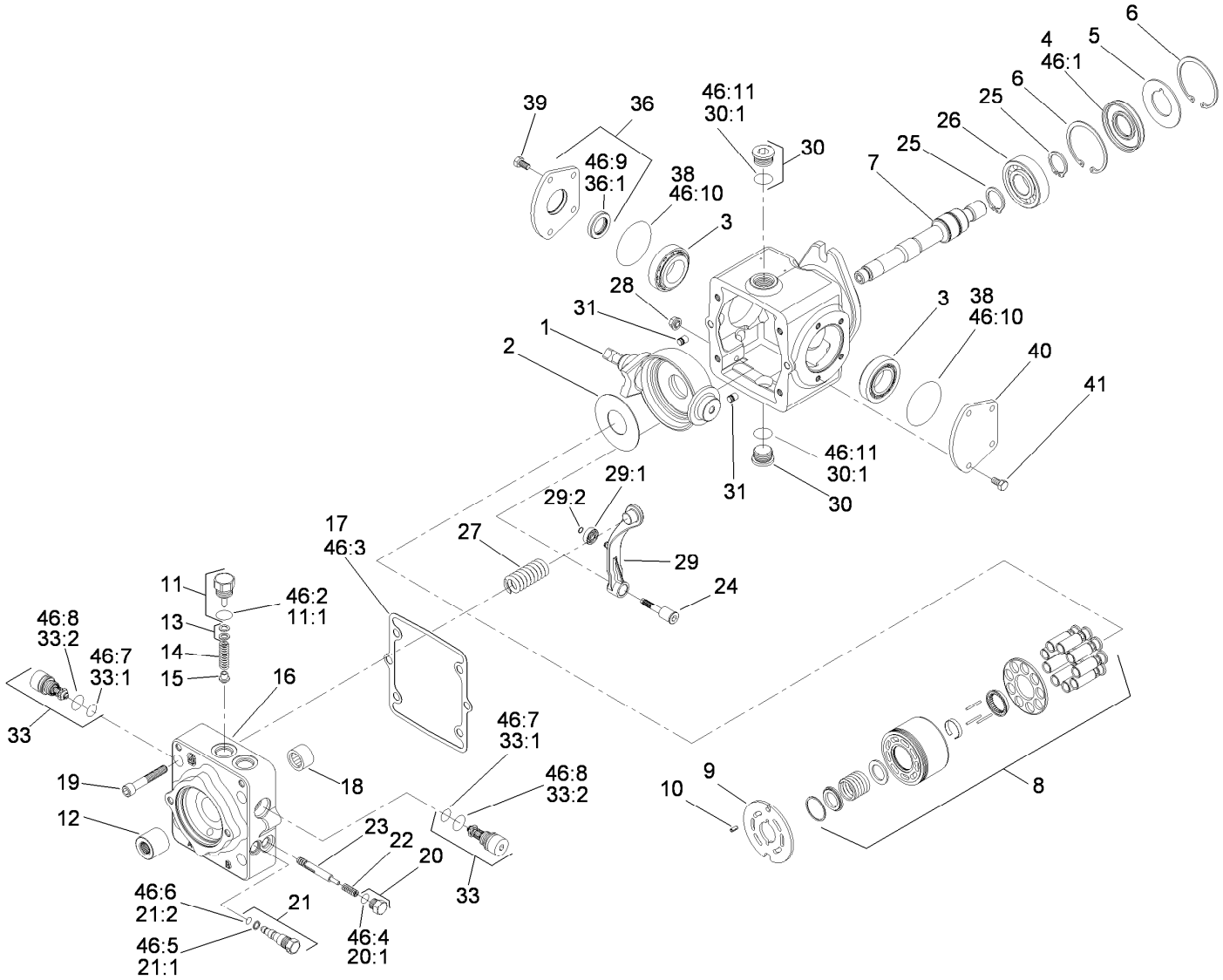


# Hydraulic Pump Assembly No. 119-6972 (continued)

| Ref. | Part Number | Qty. | Description |
|---|---|---|---|
| 30:1 | | 1 | O-Ring ■ |
| 31 | 112-0158 | 2 | Pin |
| 33 | 110-6477 | 2 | Valve-Relief |
| 33:1 | 75-0240 | 1 | O-Ring |
| 33:2 | 84-0560 | 1 | O-Ring |
| 36 | 110-6499 | 1 | Trunnion Cover ASM |
| 36:1 | 110-6478 | 1 | Seal-Lip |
| 38 | 84-0430 | 2 | O-Ring |
| 39 | 112-0150 | 4 | Screw |
| 40 | 84-0440 | 1 | Cover-Trunnion |
| 41 | 112-0151 | 4 | Screw |
| 46 | 110-6481 | 1 | Seal Kit ● |

| Ref. | Part Number | Qty. | Description |
|---|---|---|---|
| 46:1 | 110-6471 | 1 | Seal-Lip |
| 46:2 | 28-3570 | 1 | O-Ring |
| 46:3 | 110-6476 | 1 | Gasket-Cap, End |
| 46:4 | | 1 | O-Ring ■ |
| 46:5 | 25-2630 | 1 | Ring-Back Up |
| 46:6 | 110-6498 | 1 | O-Ring |
| 46:7 | 75-0240 | 2 | O-Ring |
| 46:8 | 84-0560 | 2 | O-Ring |
| 46:9 | 110-6478 | 1 | Seal-Lip |
| 46:10 | 84-0430 | 2 | O-Ring |
| 46:11 | | 2 | O-Ring ■ |

● Not illustrated

■ Not serviced separately

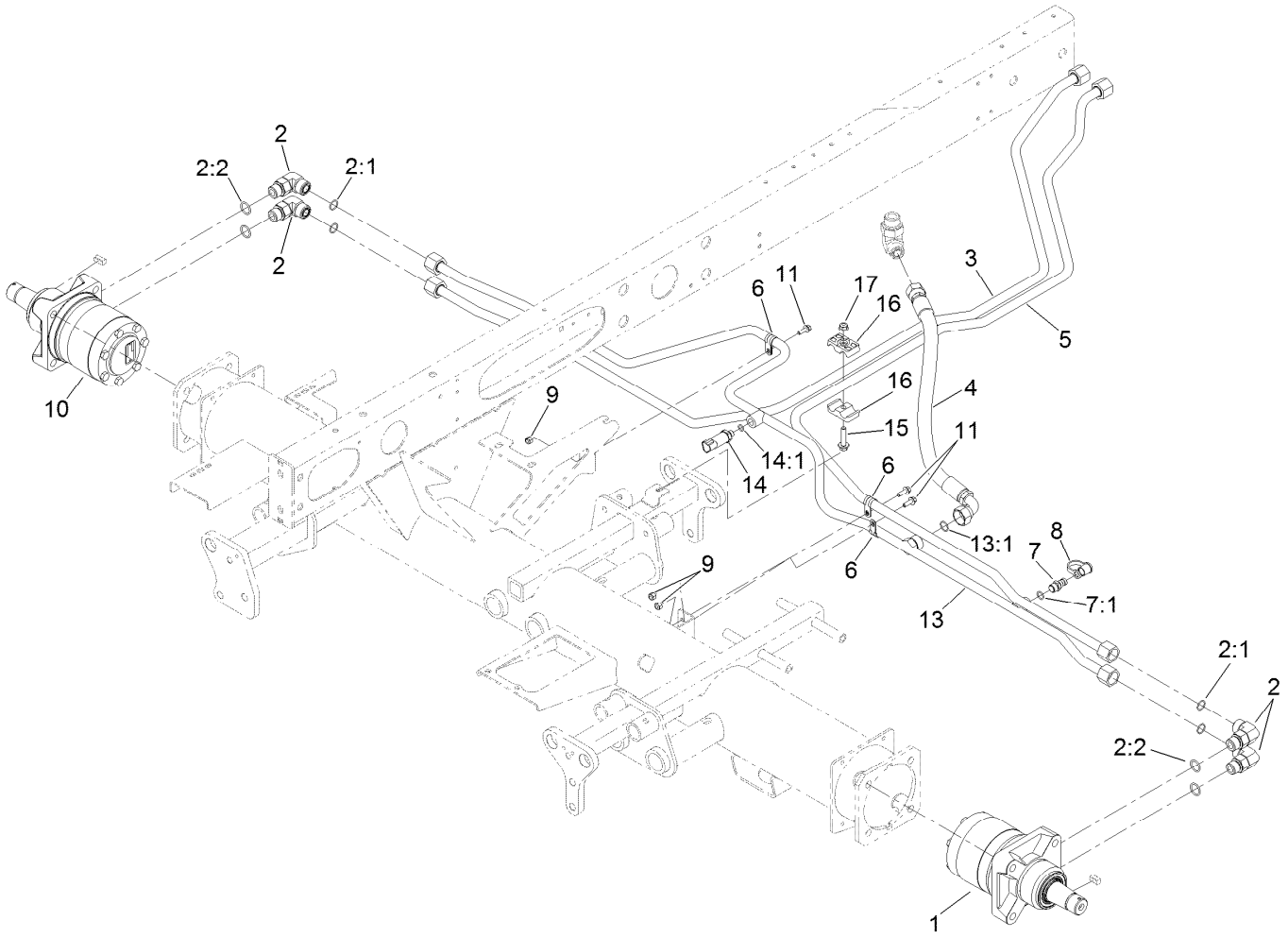


# Front Traction Hydraulic Circuit

| Ref. | Part Number | Qty. | Description |
|---|---|---|---|
| 1 | 120-6264 | 1 | Hydraulic Motor ASM (CCW) |
| 2 | 340-17 | 4 | Fitting-Elbow, 90 DEG |
| 2:1 | 237-65 | 1 | O-Ring |
| 2:2 | 237-80 | 1 | O-Ring |
| 3 | 114-0425 | 1 | Hydraulic Tube ASM |
| 4 | 108-1679 | 1 | Hose-HYD |
| 5 | 114-0424 | 1 | Hydraulic Tube ASM |
| 6 | 2412-134 | 3 | Clamp-R |
| 7 | 59-7410 | 1 | Fitting-Diagnostic |
| 7:1 | 237-42 | 1 | O-Ring |
| 8 | 354-79 | 1 | Cap-Dust |

| Ref. | Part Number | Qty. | Description |
|---|---|---|---|
| 9 | 3296-42 | 3 | Nut-Lock, NI |
| 10 | 120-6265 | 1 | Hydraulic Motor ASM (CW) |
| 11 | 3234-4 | 3 | Screw-HHF |
| 13 | 114-0389 | 1 | Hydraulic Tube ASM |
| 13:1 | 237-65 | 1 | O-Ring |
| 14 | 119-0011 | 1 | Pressure Transducer ASM |
| 14:1 | 237-78 | 1 | O-Ring |
| 15 | 115-1794 | 1 | Screw-HHF |
| 16 | 56-7971 | 2 | Clamp-Tube |
| 17 | 104-8300 | 1 | Nut-HF, NI |

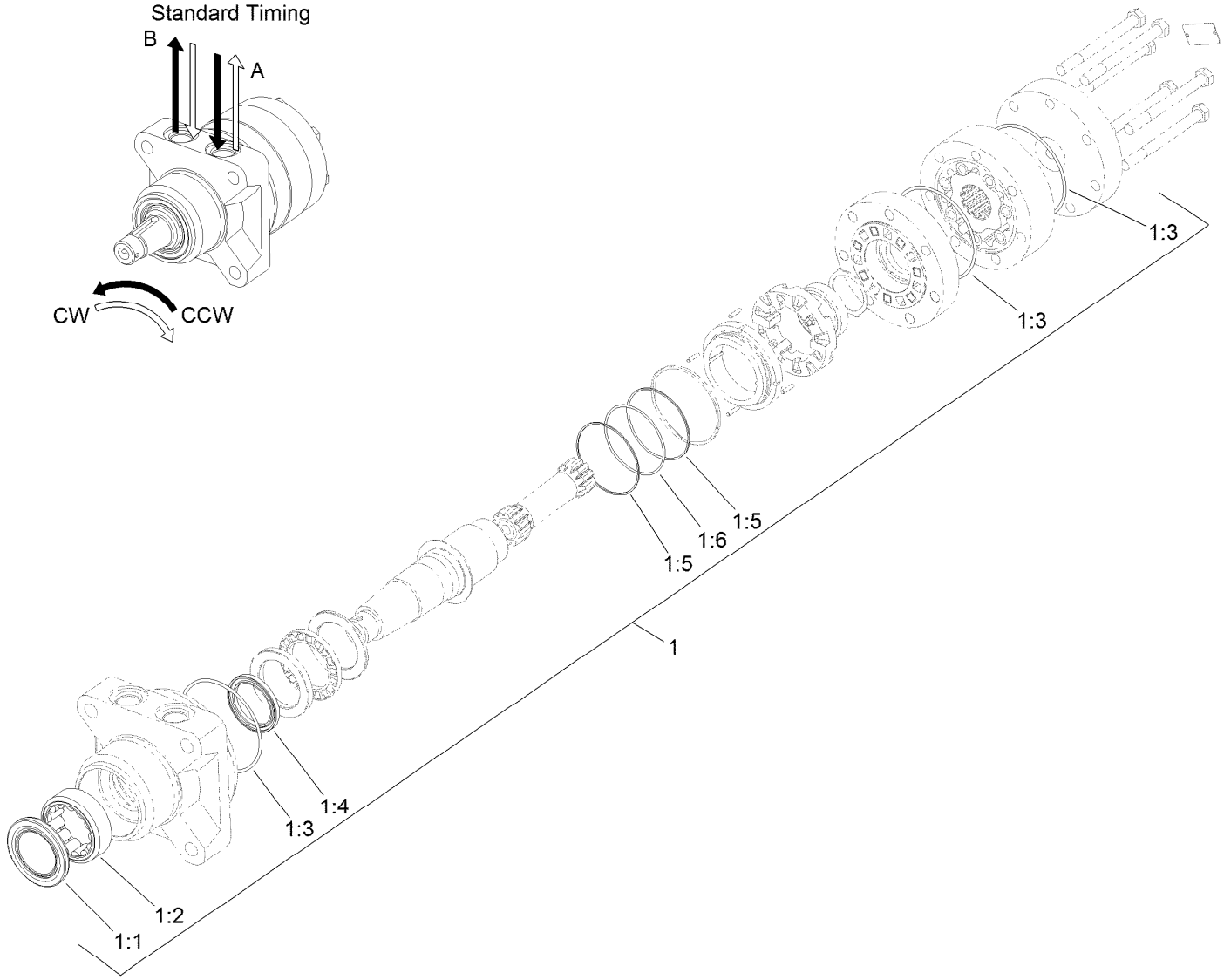


# Hydraulic Motor Assembly No. 120-6264 (CCW)

| *Ref.* | *Part Number* | *Qty.* | *Description* |
|---|---|---|---|
| 1 | 120-6268 | 1 | Seal Kit |
| 1:1 | | 1 | Seal-Grease ● |
| 1:2 | | 1 | Shell-Bearing ● |
| 1:3 | | 3 | O-Ring ● |
| 1:4 | | 1 | Seal-Shaft ● |
| 1:5 | | 2 | Ring-Back Up ● |
| 1:6 | | 1 | O-Ring ● |

● Not serviced separately

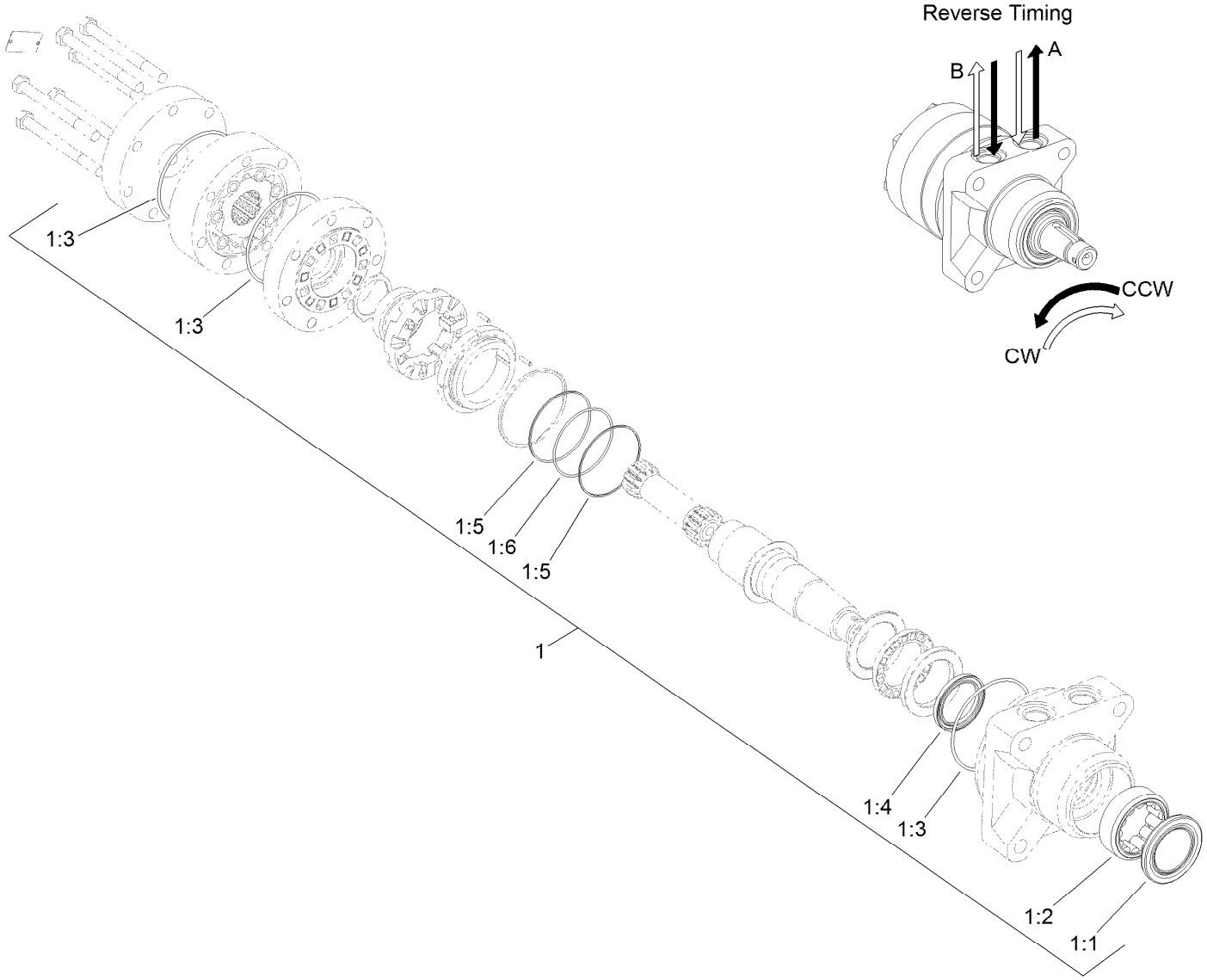


# Hydraulic Motor Assembly No. 120-6265 (CW)

| *Ref.* | *Part Number* | *Qty.* | *Description* |
|---|---|---|---|
| 1 | 120-6268 | 1 | Seal Kit |
| 1:1 | | 1 | Seal-Grease ● |
| 1:2 | | 1 | Shell-Bearing ● |
| 1:3 | | 3 | O-Ring ● |
| 1:4 | | 1 | Seal-Shaft ● |
| 1:5 | | 2 | Ring-Back Up ● |
| 1:6 | | 1 | O-Ring ● |

● Not serviced separately

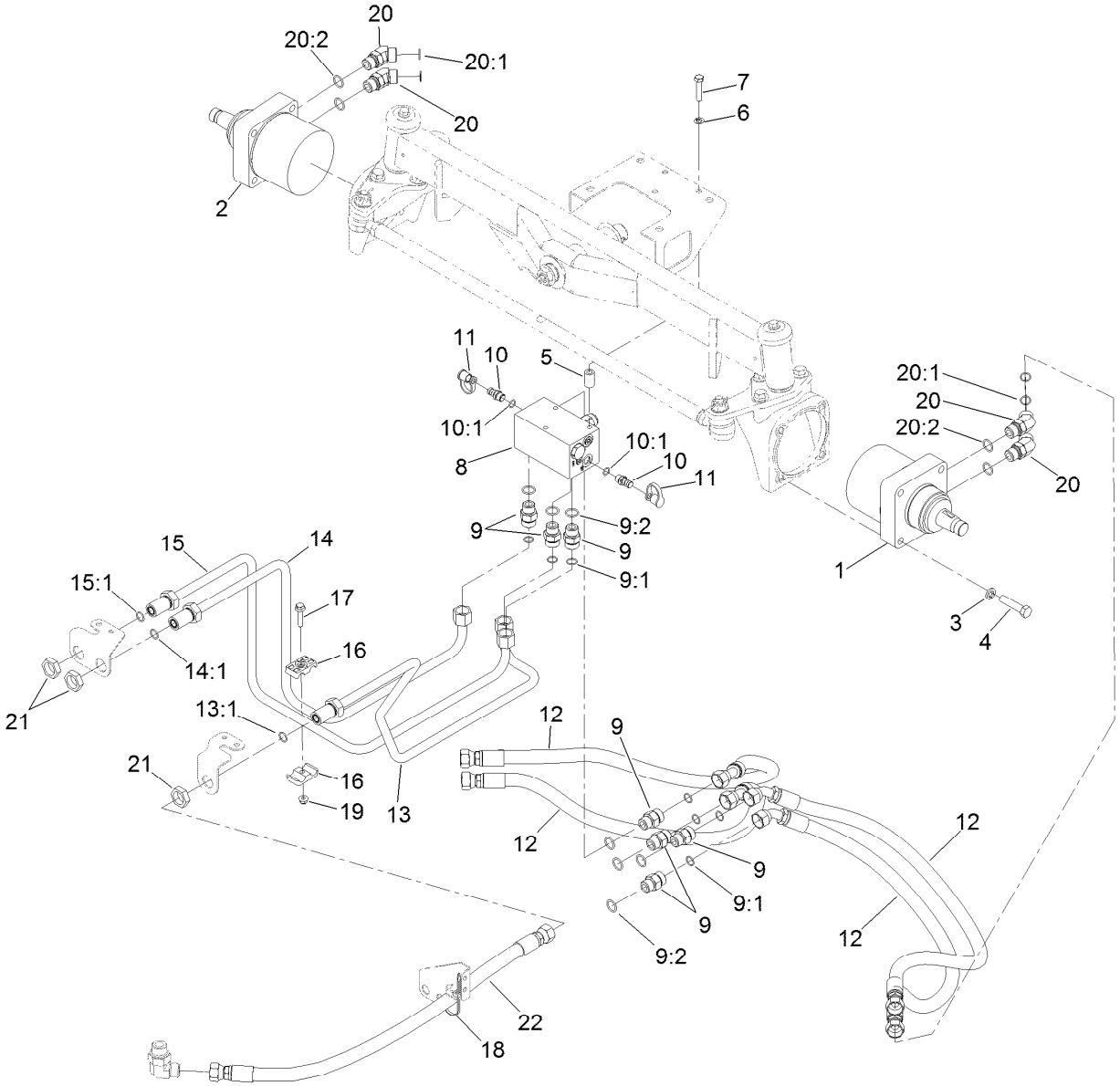


# Rear Traction Hydraulic Circuit

| Ref. | Part Number | Qty. | Description |
|---|---|---|---|
| 1 | 107-4544 | 1 | HYD Motor ASM |
| 2 | 110-0901 | 1 | HYD Motor ASM |
| 3 | 3253-7 | 8 | Washer-Lock |
| 4 | 325-9 | 8 | Screw-HH |
| 5 | 93-6981 | 3 | Spacer |
| 6 | 3253-21 | 3 | Washer-Lock |
| 7 | 323-9 | 3 | Screw-HH |
| 8 | 108-1825 | 1 | HYD Manifold ASM |
| 9 | 340-7 | 7 | Fitting-Straight |
| 9:1 | 237-65 | 1 | O-Ring |
| 9:2 | 237-80 | 1 | O-Ring |
| 10 | 59-7410 | 2 | Fitting-Diagnostic |
| 10:1 | 237-42 | 1 | O-Ring |
| 11 | 354-79 | 2 | Cap-Dust |
| 12 | 106-3662 | 4 | Hose-HYD |

| Ref. | Part Number | Qty. | Description |
|---|---|---|---|
| 13 | 108-7626 | 1 | Tube ASM |
| 13:1 | 237-65 | 1 | O-Ring |
| 14 | 108-7625 | 1 | Tube ASM |
| 14:1 | 237-65 | 1 | O-Ring |
| 15 | 108-7624 | 1 | Tube ASM |
| 15:1 | 237-65 | 1 | O-Ring |
| 16 | 56-7971 | 2 | Clamp-Tube |
| 17 | 94-5780 | 1 | Screw-HWH |
| 18 | 3290-378 | 1 | Tie-Cable |
| 19 | 104-8300 | 1 | Nut-HF, NI |
| 20 | 340-14 | 4 | Fitting-HYD, 45 DEG |
| 20:1 | 237-65 | 1 | O-Ring |
| 20:2 | 237-80 | 1 | O-Ring |
| 21 | 340-74 | 3 | Nut-Lock, Bulkhead |
| 22 | 108-7645 | 1 | Hose-HYD |

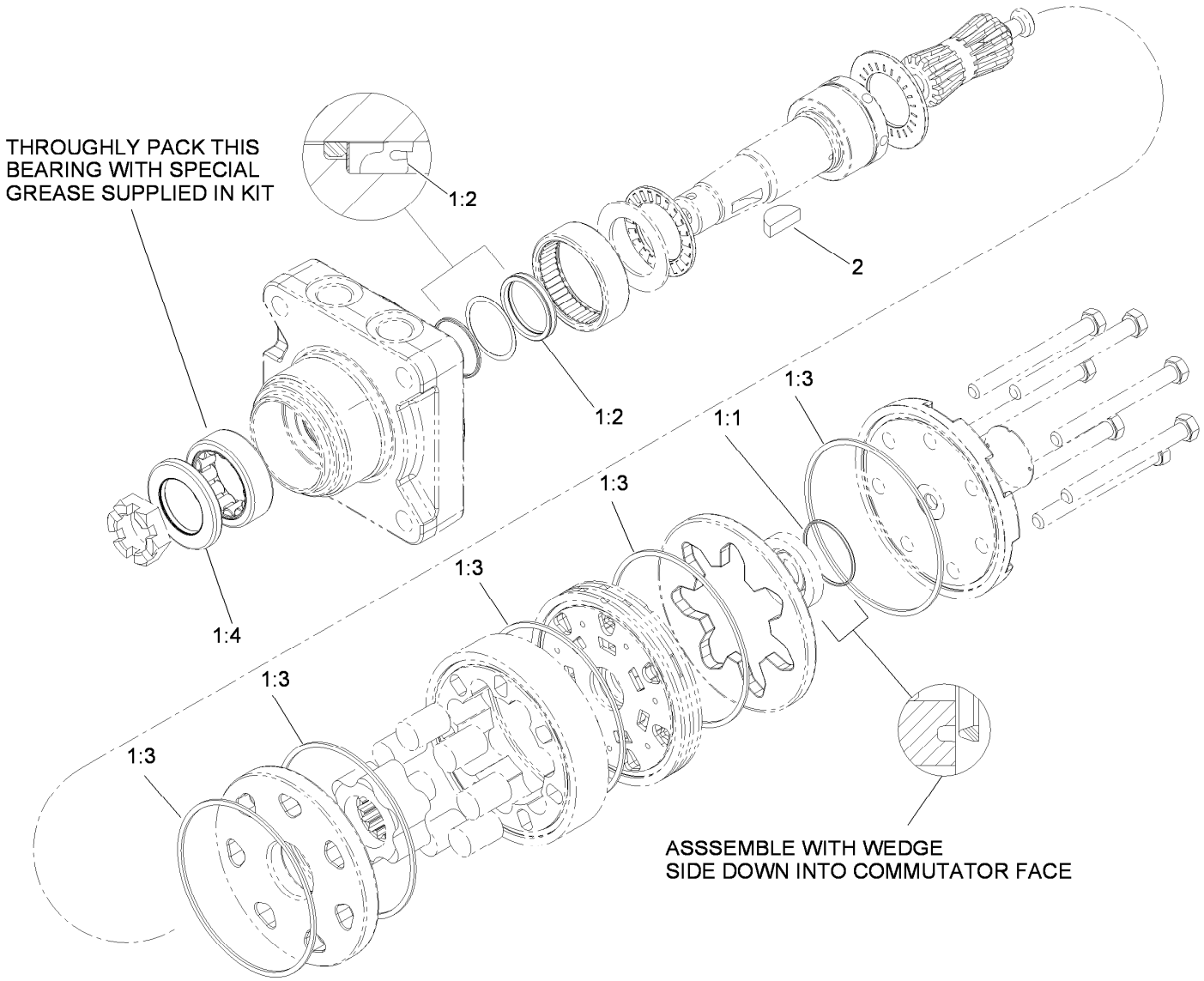


# Hydraulic Motor Asembly No. 107-4544

| *Ref.* | *Part Number* | *Qty.* | *Description* |
|---|---|---|---|
| 1 | 110-8897 | 1 | Seal Kit ● |
| 1:1 | | 1 | Seal-Commutator, Vespel ■ |
| 1:2 | | 1 | Seal-Shaft ■ |
| 1:3 | | 5 | Seal-Body, Buna ■ |
| 1:4 | | 1 | Seal-Dirt / Water ■ |
| 2 | 3257-42 | 1 | Key-Woodruff |

● Not illustrated

■ Not serviced separately

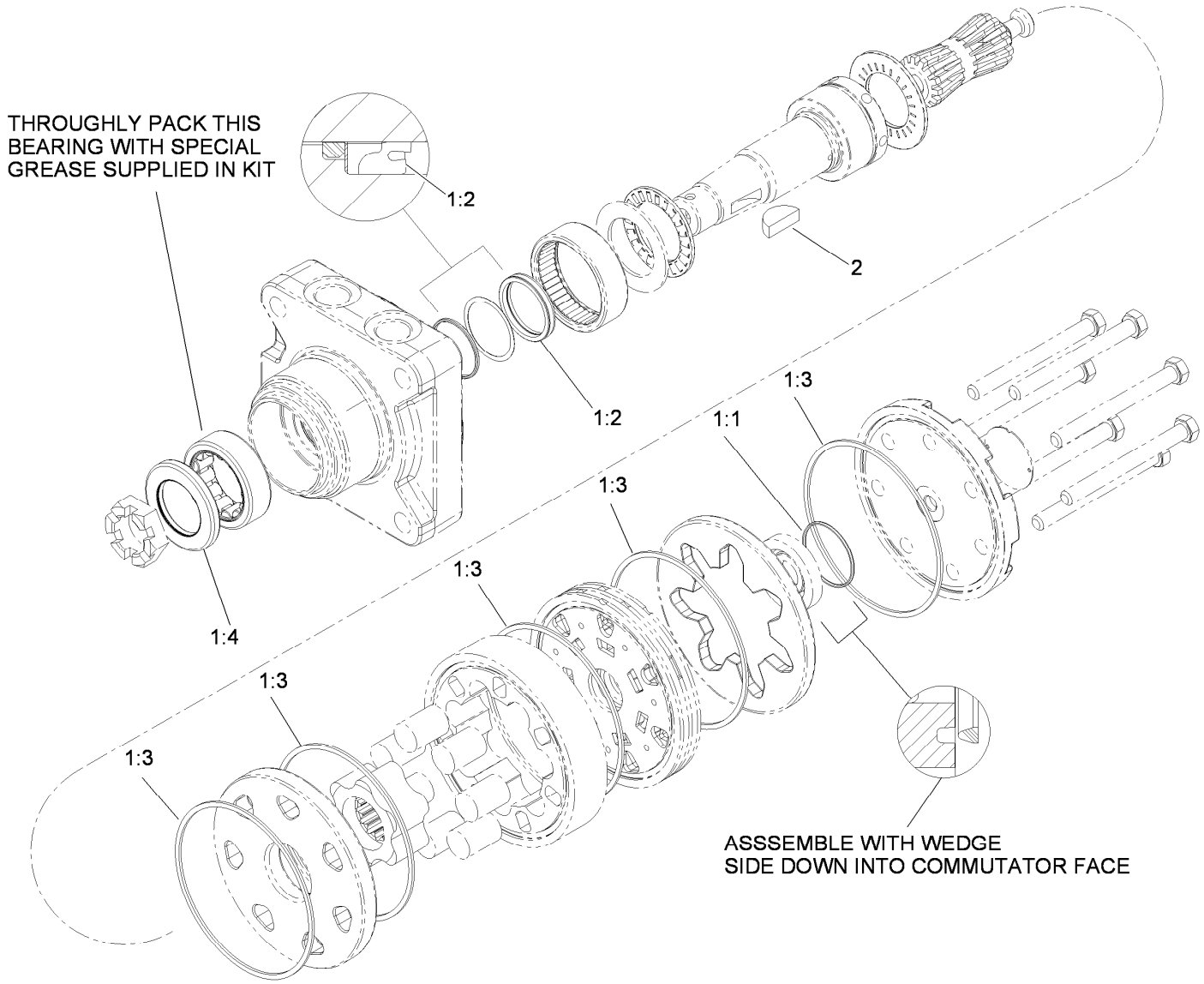


# Hydraulic Motor Assembly No. 110-0901

| *Ref.* | *Part Number* | *Qty.* | *Description* |
|---|---|---|---|
| 1 | 110-8897 | 1 | Seal Kit ● |
| 1:1 | | 1 | Seal-Commutator, Vespel ■ |
| 1:2 | | 1 | Seal-Shaft ■ |
| 1:3 | | 5 | Seal-Body, Buna ■ |
| 1:4 | | 1 | Seal-Dirt / Water ■ |
| 2 | 3257-42 | 1 | Key-Woodruff |

● Not illustrated

■ Not serviced separately

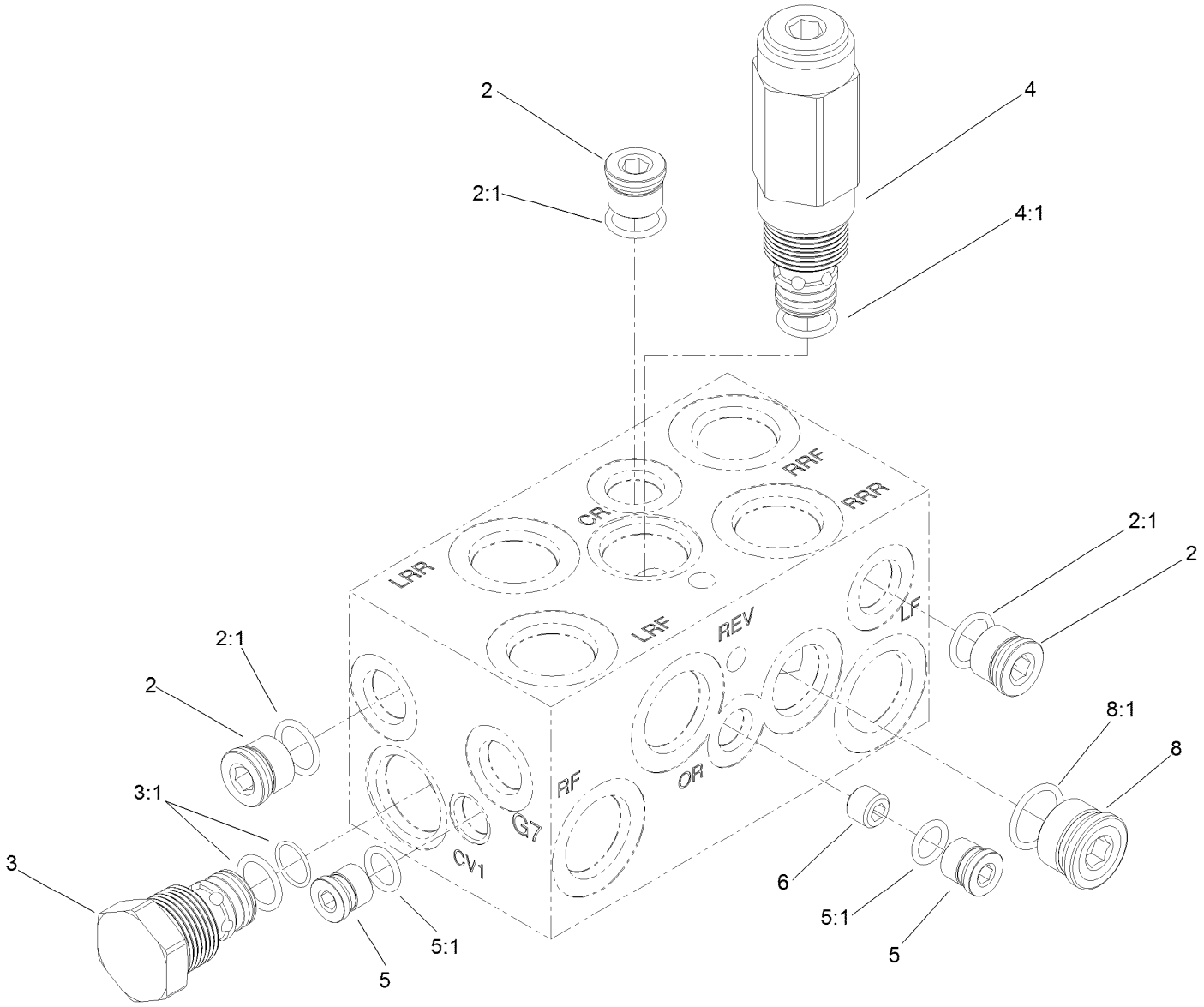


# Four Wheel Drive Manifold Assembly No. 108-1825

| *Ref.* | *Part Number* | *Qty.* | *Description* |
|---|---|---|---|
| 2 | 106-1026 | 3 | Plug-HYD |
| 2:1 | 237-42 | 1 | O-Ring |
| 3 | 110-8881 | 2 | Valve-Check |
| 3:1 | 105-9159 | 1 | Seal Kit ● |
| 4 | 110-8882 | 1 | Valve-Relief, Cross Over |
| 4:1 | 110-6316 | 1 | Seal Kit |
| 5 | 106-1025 | 2 | Plug-HYD |
| 5:1 | 237-78 | 1 | O-Ring |
| 6 | 110-8883 | 1 | Plug-Orifice (0.040) |
| 8 | 106-1027 | 1 | Plug |
| 8:1 | 237-79 | 1 | O-Ring |

● Not illustrated

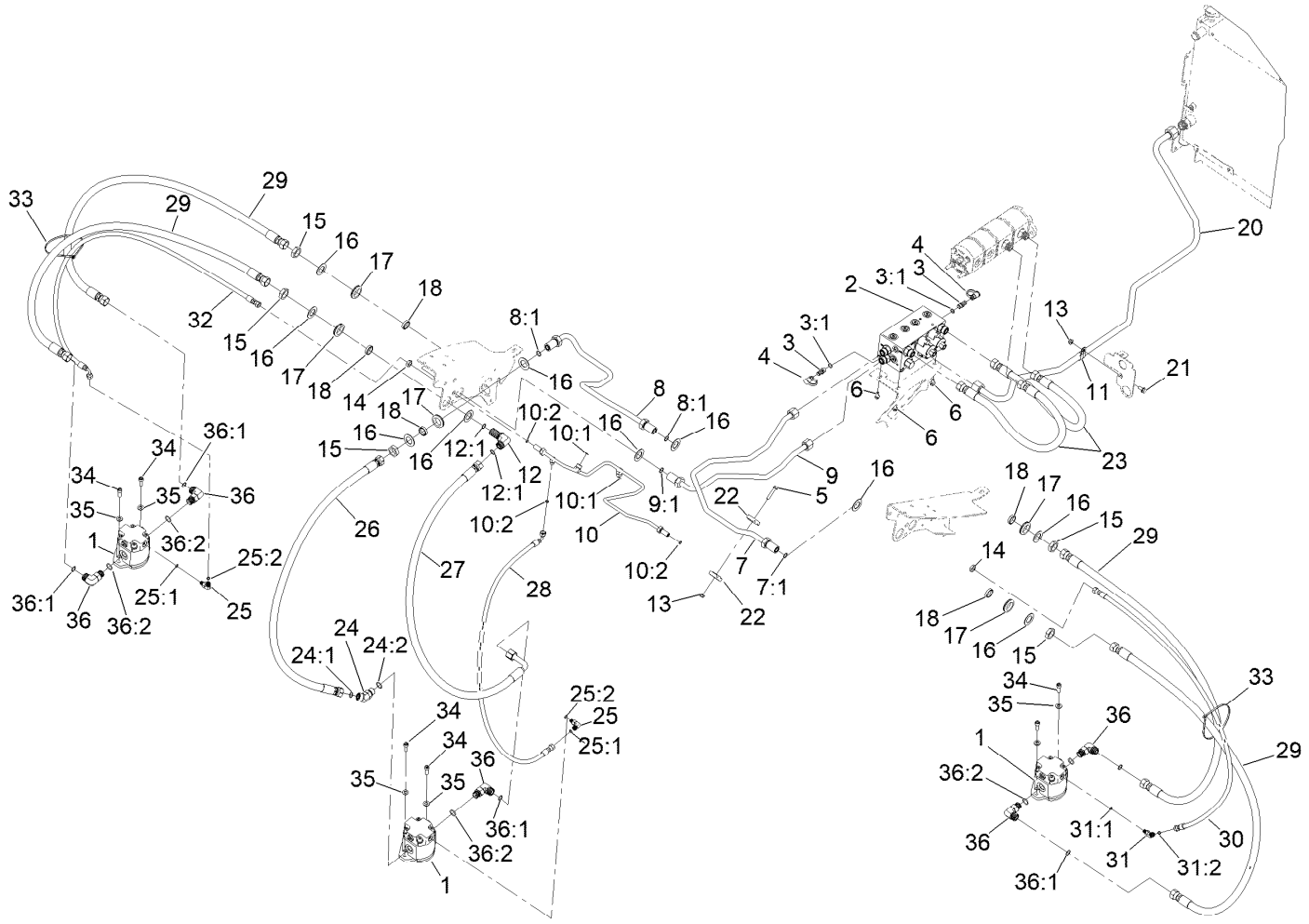


# Deck No. 1, 4 and 5 Hydraulic Circuit Assembly

| Ref. | Part Number | Qty. | Description |
|---|---|---|---|
| 1 | 108-4004 | 3 | Gear Motor ASM |
| 2 | 114-0359 | 1 | Deck Control Manifold ASM |
| 3 | 59-7410 | 2 | Fitting-Diagnostic |
| 3:1 | 237-42 | 1 | O-Ring |
| 4 | 354-79 | 2 | Cap-Dust |
| 5 | 94-5780 | 1 | Screw-HWH |
| 6 | 3234-14 | 3 | Screw-HHF |
| 7 | 117-0138 | 1 | Tube ASM |
| 7:1 | 237-65 | 1 | O-Ring |
| 8 | 117-0137 | 1 | Tube ASM |
| 8:1 | 237-65 | 2 | O-Ring |
| 9 | 117-0139 | 1 | Tube ASM |
| 9:1 | 237-65 | 1 | O-Ring |
| 10 | 110-5286 | 1 | Tube ASM |
| 10:1 | 237-22 | 2 | O-Ring |
| 10:2 | 237-21 | 3 | O-Ring |
| 11 | 2412-4 | 1 | Clamp-R |
| 12 | 340-72 | 1 | Fitting-Bulkhead, 90 DEG |
| 12:1 | 237-65 | 2 | O-Ring |
| 13 | 104-8300 | 2 | Nut-HF, NI |
| 14 | 340-78 | 2 | Nut-Lock |

| Ref. | Part Number | Qty. | Description |
|---|---|---|---|
| 15 | 340-74 | 5 | Nut-Lock, Bulkhead |
| 16 | 69-9010 | 10 | Washer |
| 17 | 240-3 | 5 | Grommet-Rubber |
| 18 | 69-9000 | 5 | Spacer |
| 20 | 120-3769 | 1 | Hydraulic Tube ASM |
| 21 | 3234-5 | 1 | Screw-HHF |
| 22 | 56-7970 | 2 | Clamp-Tube |
| 23 | 108-1686 | 2 | Hose-HYD |
| 24 | 340-14 | 1 | Fitting-HYD, 45 DEG |
| 24:1 | 237-65 | 1 | O-Ring |
| 24:2 | 237-80 | 1 | O-Ring |
| 25 | 340-132 | 2 | Fitting-Elbow, 90 DEG |
| 25:1 | 237-78 | 1 | O-Ring |
| 25:2 | 237-21 | 1 | O-Ring |
| 26 | 117-0213 | 1 | HYD Hose ASM |
| 27 | 117-0211 | 1 | HYD Hose ASM |
| 28 | 117-0212 | 1 | HYD Hose ASM |
| 29 | 117-0299 | 4 | HYD Hose ASM |
| 30 | 104-9323 | 1 | Hose-HYD |
| 31 | 340-103 | 1 | Fitting-HYD, 45 DEG |
| 31:1 | 237-78 | 1 | O-Ring |

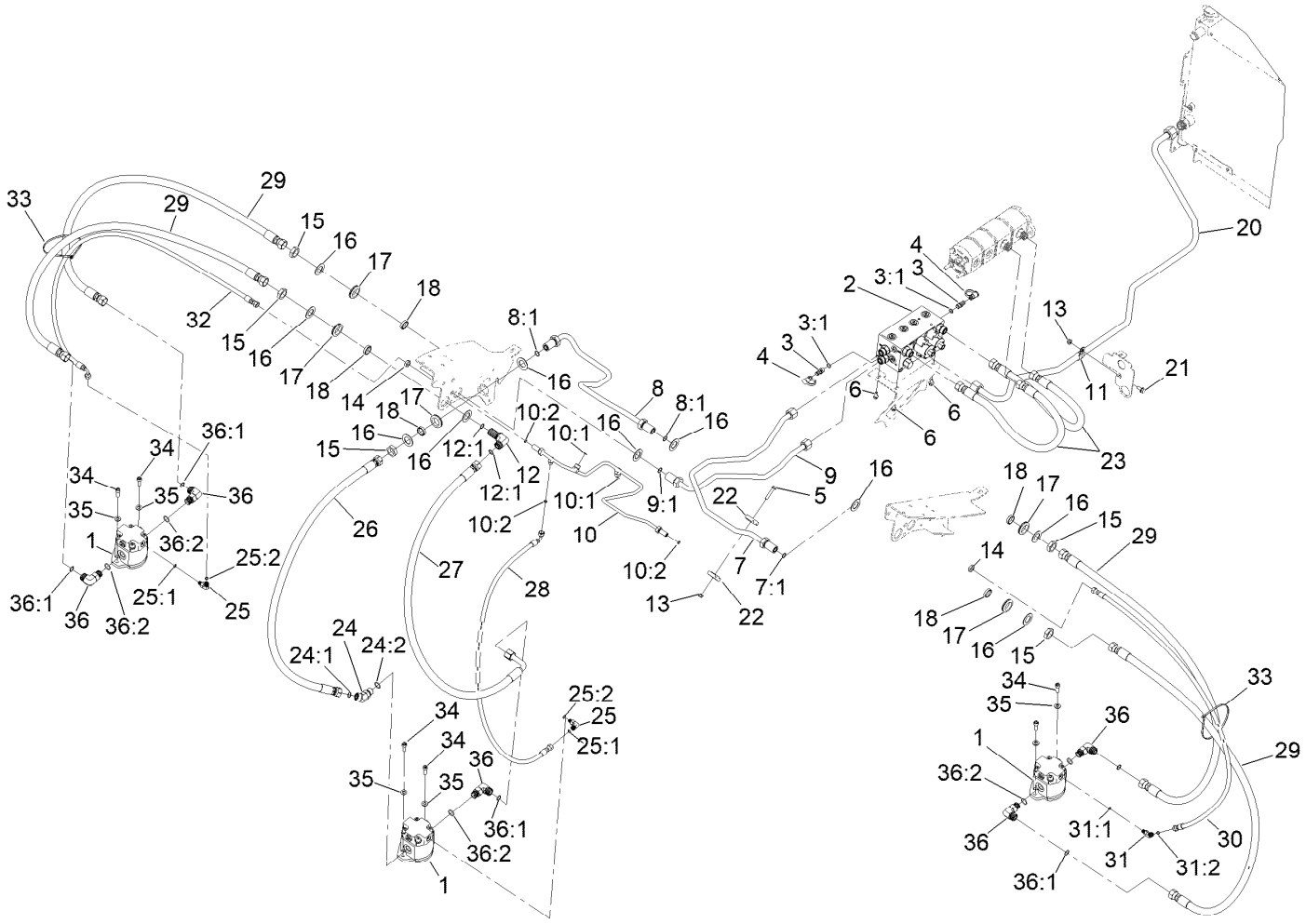


# Deck No. 1, 4 and 5 Hydraulic Circuit Assembly (continued)

| Ref. | Part Number | Qty. | Description |
|---|---|---|---|
| 31:2 | 237-21 | 1 | O-Ring |
| 32 | 92-7638 | 1 | Hose ASM |
| 33 | 3334-945 | 9 | Tie-Cable |
| 34 | 3274-7 | 6 | Screw-HSH |
| 35 | 3256-24 | 6 | Washer-Flat |
| 36 | 340-17 | 5 | Fitting-Elbow, 90 DEG |
| 36:1 | 237-65 | 1 | O-Ring |
| 36:2 | 237-80 | 1 | O-Ring |

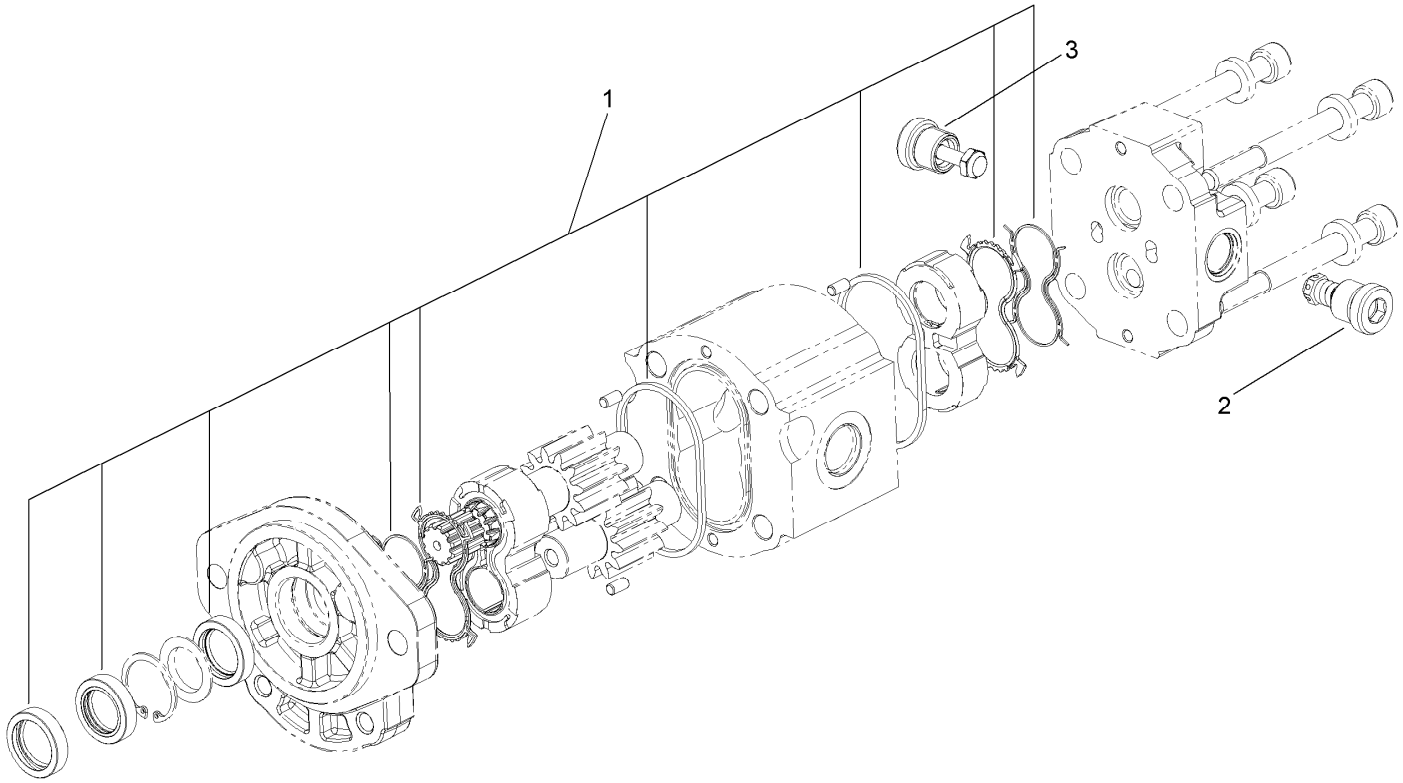


# Gear Motor Assembly No. 108-4004

| *Ref.* | *Part Number* | *Qty.* | *Description* |
|---|---|---|---|
| 1 | 117-0235 | 1 | Seal Kit |
| 2 | 107-7820 | 1 | Valve-Relief |
| 3 | 107-7821 | 1 | Valve-Anticavitation |

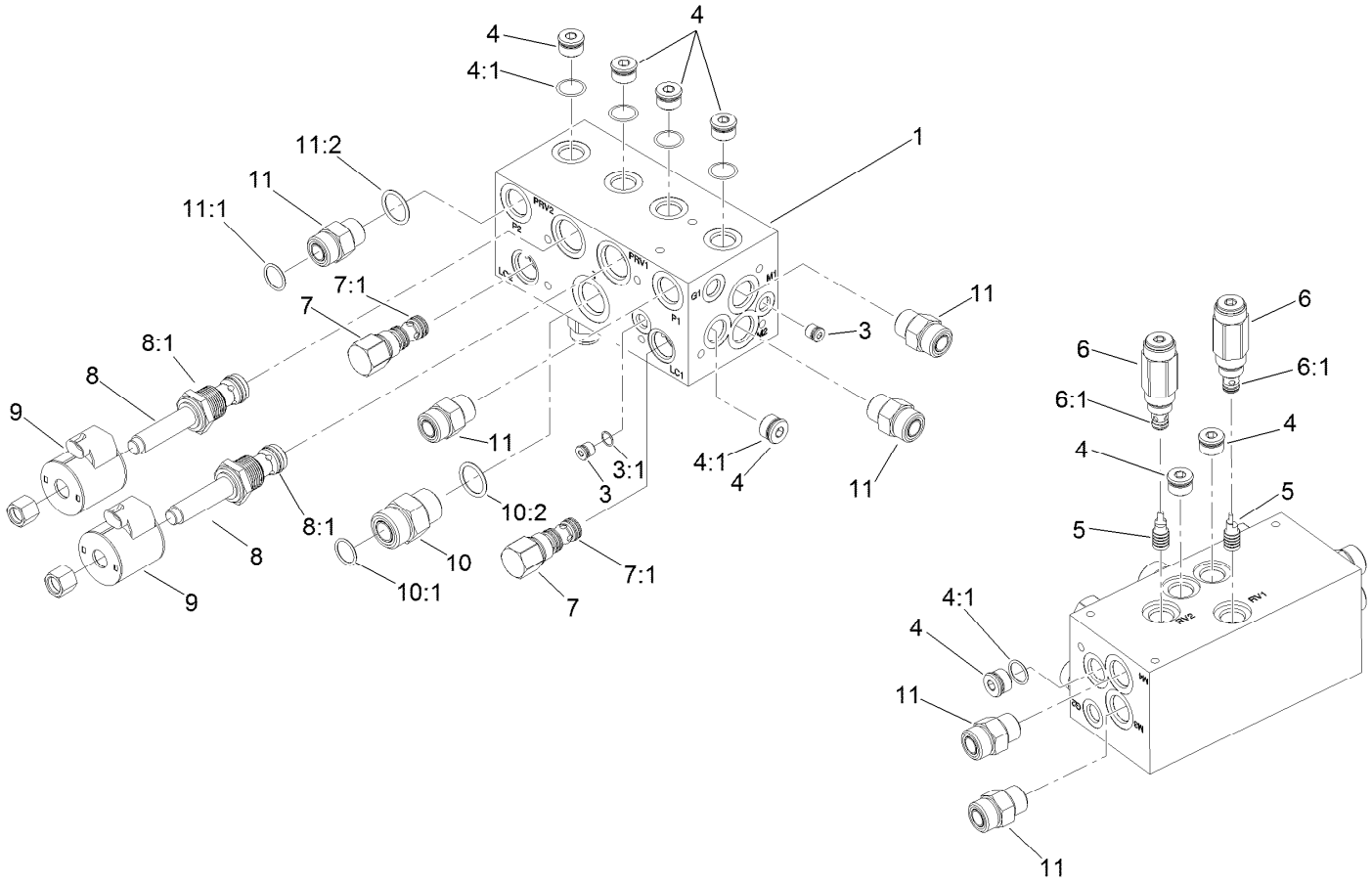


# Deck Control Manifold Assembly No. 114-0359

| Ref. | Part Number | Qty. | Description |
|---|---|---|---|
| 1 | | 1 | Hydraulic Manifold ● |
| 3 | 106-1025 | 2 | Plug-HYD |
| 3:1 | 237-78 | 1 | O-Ring |
| 4 | 106-1027 | 8 | Plug |
| 4:1 | 237-79 | 1 | O-Ring |
| 5 | 105-9157 | 2 | Piston-Pilot |
| 6 | 112-5259 | 2 | Valve-Relief |
| 6:1 | 105-9156 | 1 | Seal Kit |
| 7 | 105-9153 | 2 | Element-Logic, Vented |
| 7:1 | 119-2159 | 1 | Seal Kit |

| Ref. | Part Number | Qty. | Description |
|---|---|---|---|
| 8 | 117-0229 | 2 | Valve-Relief, Proportional |
| 8:1 | 117-1114 | 1 | Seal Kit |
| 9 | 110-6344 | 2 | Coil-12V, DC |
| 10 | 340-9 | 1 | Fitting-STR |
| 10:1 | 237-58 | 1 | O-Ring |
| 10:2 | 237-81 | 1 | O-Ring |
| 11 | 340-7 | 2 | Fitting-Straight |
| 11:1 | 237-65 | 1 | O-Ring |
| 11:2 | 237-80 | 1 | O-Ring |

● Not serviced separately

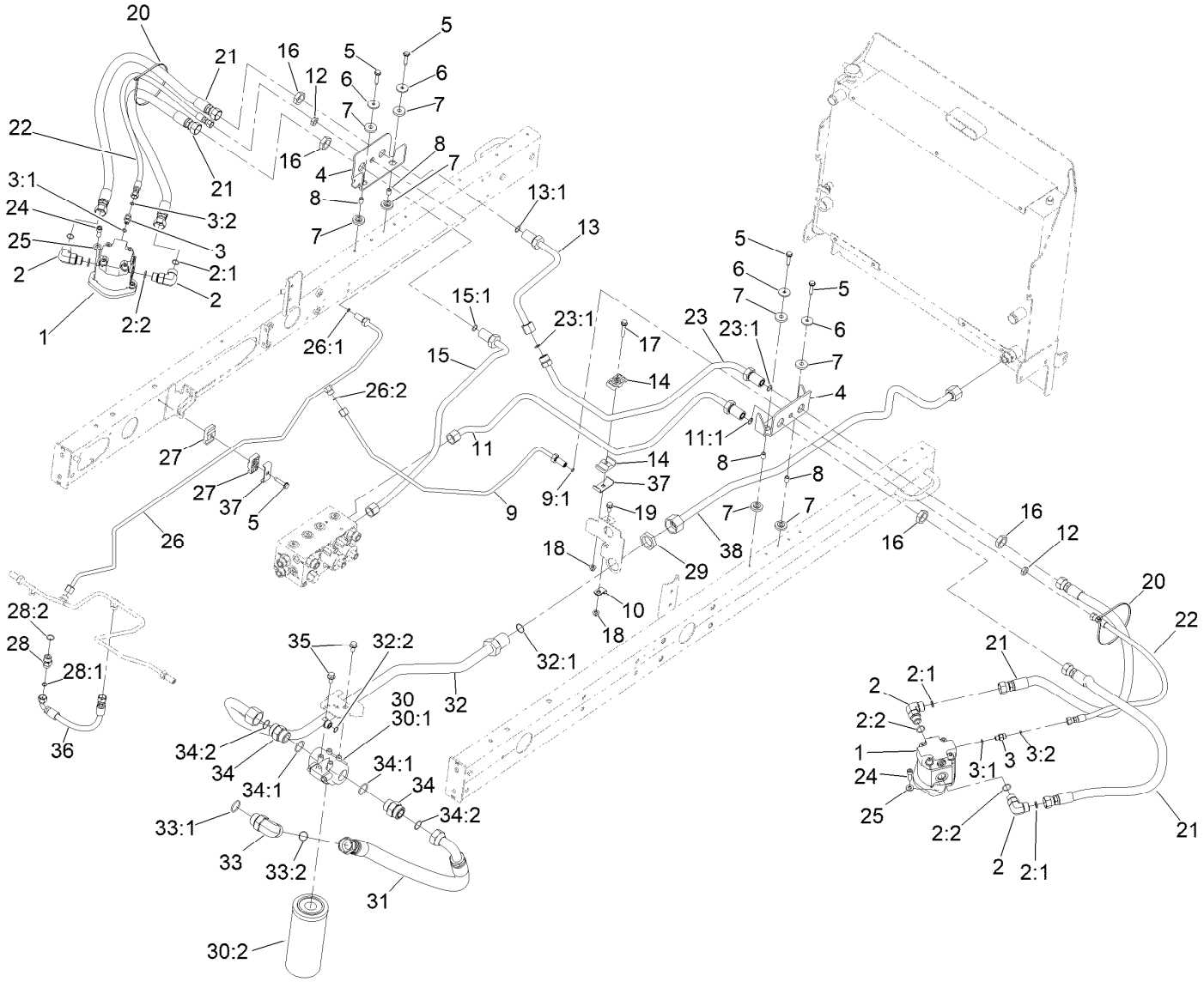


# Deck No. 2 and 3 Hydraulic Circuit Assembly

| Ref. | Part Number | Qty. | Description |
|---|---|---|---|
| 1 | 108-4004 | 2 | Gear Motor ASM |
| 2 | 340-17 | 4 | Fitting-Elbow, 90 DEG |
| 2:1 | 237-65 | 1 | O-Ring |
| 2:2 | 237-80 | 1 | O-Ring |
| 3 | 340-92 | 2 | Fitting-Straight |
| 3:1 | 237-78 | 1 | O-Ring |
| 3:2 | 237-21 | 1 | O-Ring |
| 4 | 117-0174-03 | 2 | Bracket-Bulkhead |
| 5 | 32144-57 | 5 | Screw |
| 6 | 105-3048 | 4 | Washer-Flat |
| 7 | 240-11 | 8 | Bushing-Flange |
| 8 | 99-8611 | 4 | Spacer |
| 9 | 120-3772 | 1 | HYD Tube ASM |
| 9:1 | 237-21 | 1 | O-Ring |
| 10 | 2412-113 | 1 | Clamp-R |
| 11 | 120-3774 | 1 | HYD Tube ASM |
| 11:1 | 237-65 | 1 | O-Ring |
| 12 | 340-78 | 2 | Nut-Lock |
| 13 | 117-0140 | 1 | Tube ASM |
| 13:1 | 237-65 | 1 | O-Ring |
| 14 | 56-7971 | 2 | Clamp-Tube |

| Ref. | Part Number | Qty. | Description |
|---|---|---|---|
| 15 | 120-3773 | 1 | Tube ASM HYD |
| 15:1 | 237-65 | 1 | O-Ring |
| 16 | 340-74 | 4 | Nut-Lock, Bulkhead |
| 17 | 94-5780 | 1 | Screw-HWH |
| 18 | 104-8300 | 2 | Nut-HF, NI |
| 19 | 3234-5 | 1 | Screw-HHF |
| 20 | 3334-945 | 6 | Tie-Cable |
| 21 | 105-1215 | 4 | Hose-HYD |
| 22 | 108-6507 | 2 | Hose-HYD |
| 23 | 120-3775 | 1 | HYD Tube ASM |
| 23:1 | 237-65 | 2 | O-Ring |
| 24 | 3274-7 | 4 | Screw-HSH |
| 25 | 3256-24 | 4 | Washer-Flat |
| 26 | 120-3811 | 1 | HYD Tube ASM |
| 26:1 | 237-21 | 1 | O-Ring |
| 26:2 | 237-22 | 1 | O-Ring |
| 27 | 56-7972 | 2 | Clamp-Tube |
| 28 | 340-3 | 1 | Fitting-Straight |
| 28:1 | 237-22 | 1 | O-Ring |
| 28:2 | 237-79 | 1 | O-Ring |
| 29 | 340-128 | 1 | Nut-Bulkhead |

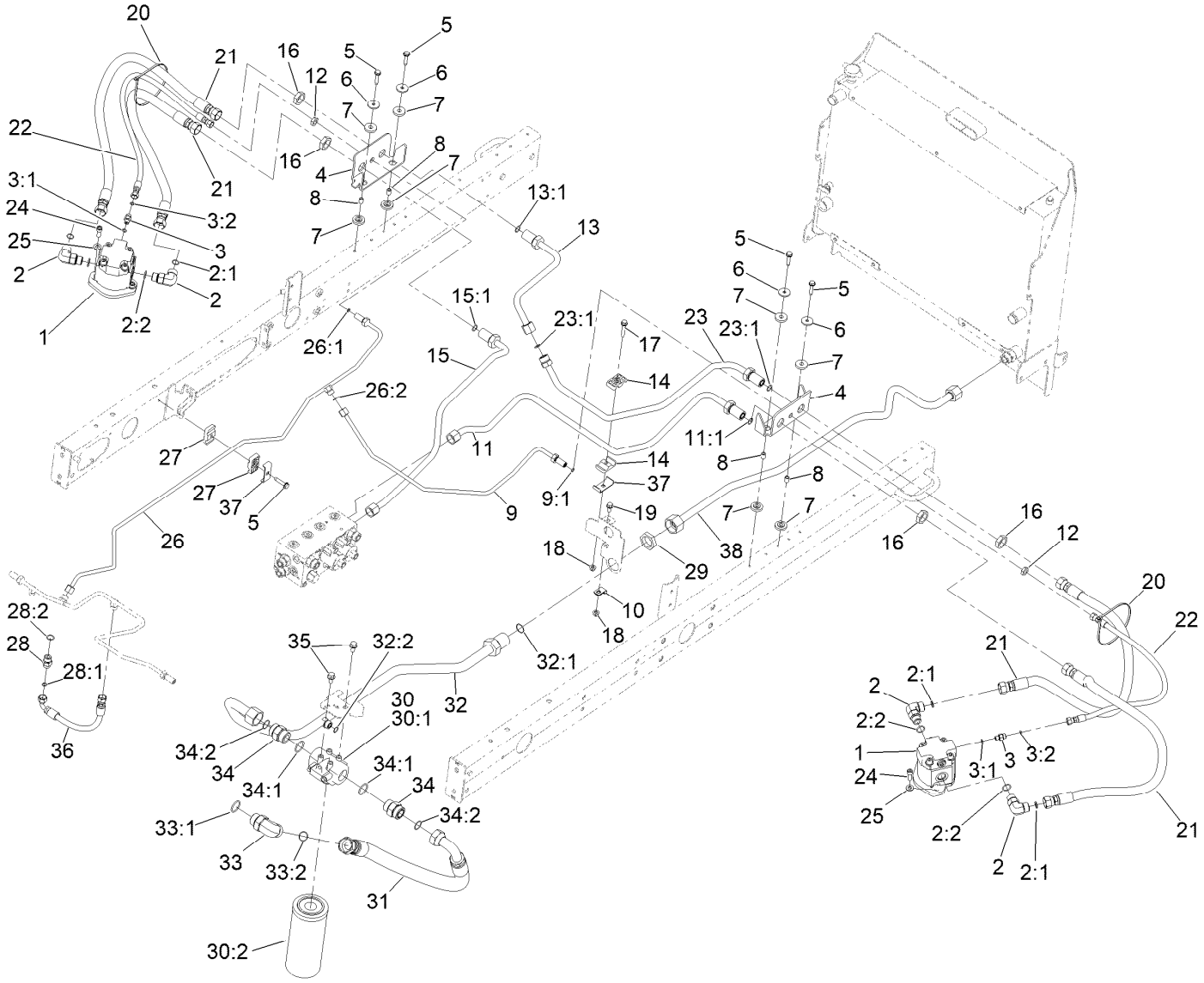


# Deck No. 2 and 3 Hydraulic Circuit Assembly (continued)

| Ref. | Part Number | Qty. | Description |
|---|---|---|---|
| 30 | 98-3923 | 1 | Oil Filter ASM |
| 30:1 | 104-0080 | 1 | Filter Head ASM |
| 30:2 | 94-2621 | 1 | Element-Filter |
| 31 | 108-1689 | 1 | Hose-HYD |
| 32 | 108-1699 | 1 | Tube ASM |
| 32:1 | 340-65 | 1 | O-Ring |
| 32:2 | 237-30 | 1 | O-Ring |
| 33 | 340-129 | 1 | Fitting-Elbow, 90 DEG |

| Ref. | Part Number | Qty. | Description |
|---|---|---|---|
| 33:1 | 237-146 | 1 | O-Ring |
| 33:2 | 340-65 | 1 | O-Ring |
| 34 | 104-3797 | 2 | Fitting-Straight |
| 34:1 | 237-146 | 1 | O-Ring |
| 34:2 | 340-65 | 1 | O-Ring |
| 35 | 3234-1 | 2 | Screw-HHF |
| 36 | 66-8490 | 1 | Hose-HYD |
| 38 | 120-3768 | 1 | Tube-Hydraulic |

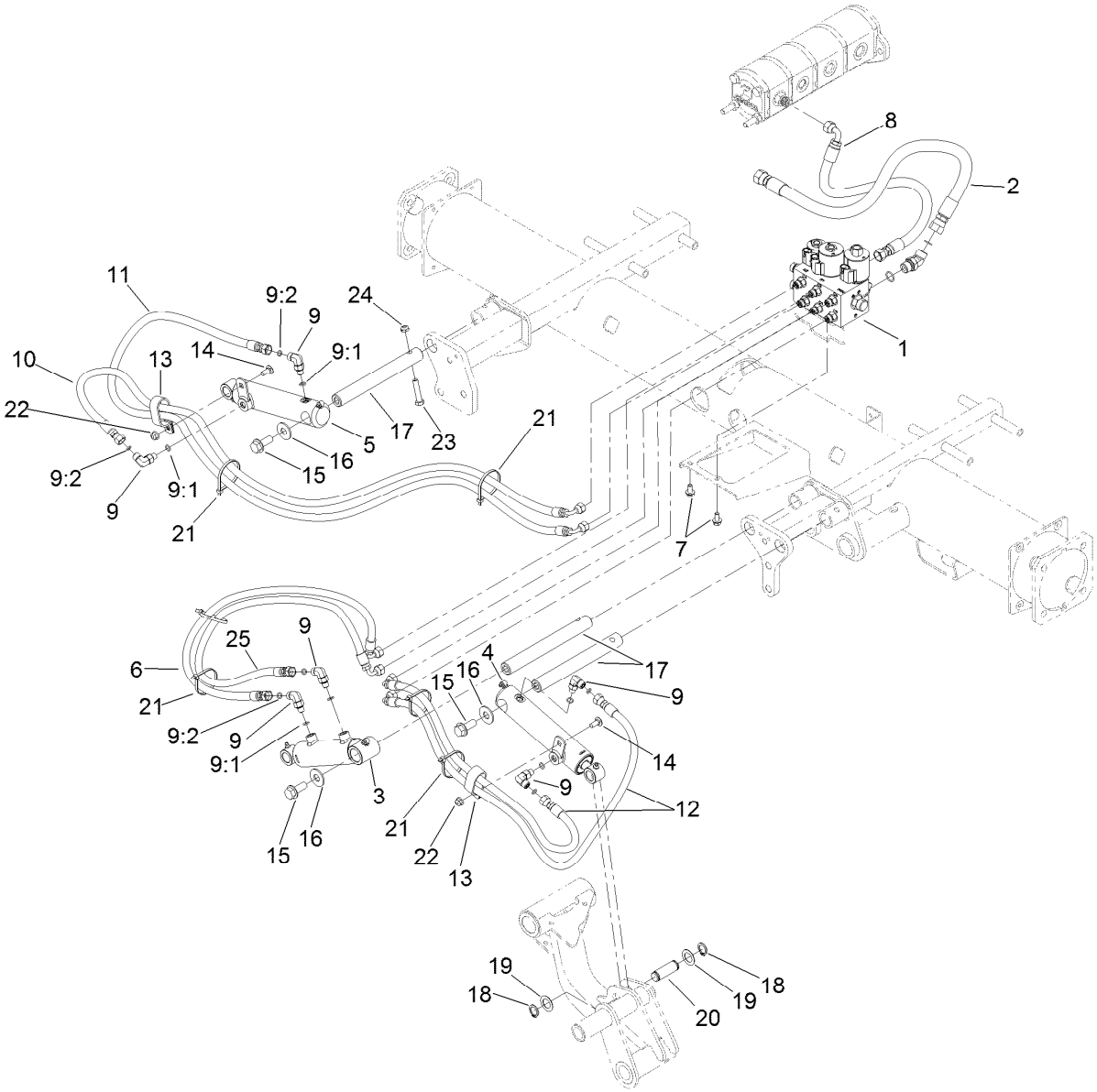


# Deck No. 1, 4 and 5 Lift Circuit Hydraulic Assembly

| Ref. | Part Number | Qty. | Description |
|---|---|---|---|
| 1 | 117-0158 | 1 | Lift Control Manifold ASM |
| 2 | 117-0180 | 1 | Hose-HYD |
| 3 | 119-6989 | 1 | HYD Cylinder ASM |
| 4 | 119-6990 | 1 | HYD Cylinder ASM |
| 5 | 119-6991 | 1 | HYD Cylinder ASM |
| 6 | 117-0253 | 1 | Hose-HYD |
| 7 | 3234-14 | 2 | Screw-HHF |
| 8 | 92-5694 | 1 | Hose-Hydraulic |
| 9 | 340-132 | 6 | Fitting-Elbow, 90 DEG |
| 9:1 | 237-78 | 1 | O-Ring |
| 9:2 | 237-21 | 1 | O-Ring |
| 10 | 117-0262 | 1 | Hose-HYD |
| 11 | 117-0261 | 1 | Hose-HYD |
| 12 | 85-4940 | 2 | Hose-HYD |

| Ref. | Part Number | Qty. | Description |
|---|---|---|---|
| 13 | 2412-137 | 2 | Clamp-R, Double |
| 14 | 3230-23 | 2 | Bolt-CARR |
| 15 | 3234-38 | 3 | Screw-HHF |
| 16 | 3256-6 | 3 | Washer-Flat |
| 17 | 117-0148 | 3 | Pin-Cylinder |
| 18 | 32120-93 | 6 | Ring-Retaining |
| 19 | 3-6498 | 6 | Washer-Thrust |
| 20 | 104-0046 | 3 | Pin-Slide, Cylinder |
| 21 | 3290-379 | 6 | Tie-Cable |
| 22 | 104-8300 | 2 | Nut-HF, NI |
| 23 | 323-9 | 3 | Screw-HH |
| 24 | 3296-59 | 3 | Nut-Lock, NI |
| 25 | 117-0254 | 1 | HP HYD Hose ASM |

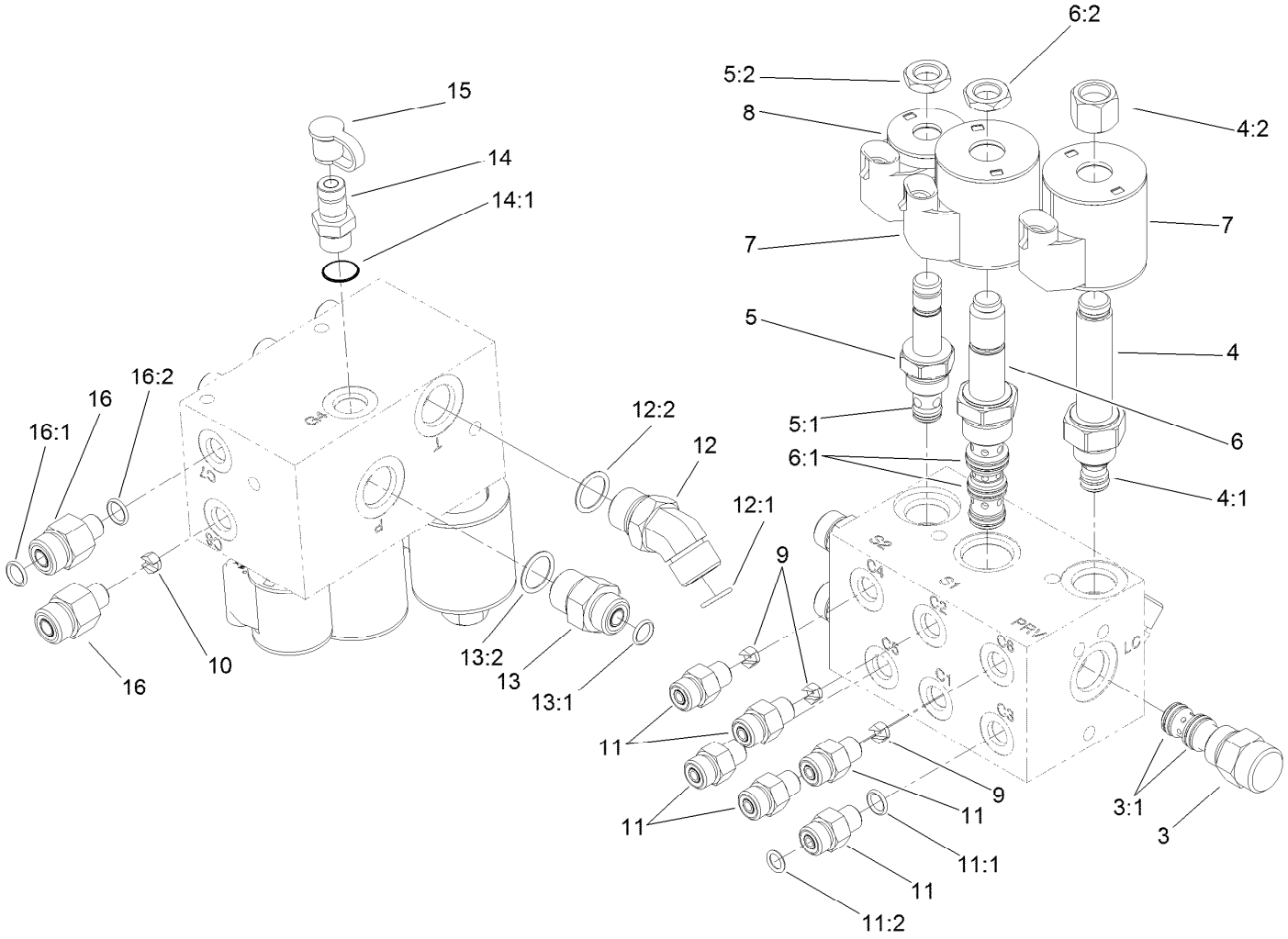


# Lift Control Manifold Assembly No. 117-0158

| Ref. | Part Number | Qty. | Description |
|---|---|---|---|
| 3 | 117-0228 | 1 | Element-Directional, Pilot |
| 3:1 | 115-5413 | 1 | Seal Kit |
| 4 | 117-0227 | 1 | Valve-Relief, Proportional |
| 4:1 | 105-9156 | 1 | Seal Kit |
| 4:2 | 119-2160 | 1 | Nut-Coil |
| 5 | 107-7516 | 1 | Solenoid Valve ASM |
| 5:1 | 105-9156 | 1 | Seal Kit |
| 5:2 | 110-2634 | 1 | Nut-Coil |
| 6 | 110-8906 | 1 | Valve-Solenoid |
| 6:1 | 110-8908 | 1 | Spool Valve Seal Kit |
| 6:2 | 110-2634 | 1 | Nut-Coil |
| 7 | 110-6344 | 2 | Coil-12V, DC |
| 8 | 110-0497 | 1 | Coil-Solenoid |
| 9 | 110-8902 | 3 | Orifice-Control, Flow (0.046) |
| 10 | 114-4682 | 1 | Orifice-Flow Control (.030) |
| 11 | 340-92 | 6 | Fitting-Straight |

| Ref. | Part Number | Qty. | Description |
|---|---|---|---|
| 11:1 | 237-78 | 1 | O-Ring |
| 11:2 | 237-21 | 1 | O-Ring |
| 12 | 340-101 | 1 | Fitting-HYD, 45 DEG |
| 12:1 | 237-30 | 1 | O-Ring |
| 12:2 | 237-79 | 1 | O-Ring |
| 13 | 340-3 | 1 | Fitting-Straight |
| 13:1 | 237-22 | 1 | O-Ring |
| 13:2 | 237-79 | 1 | O-Ring |
| 14 | 59-7410 | 1 | Fitting-Diagnostic |
| 14:1 | 237-42 | 1 | O-Ring |
| 15 | 354-79 | 1 | Cap-Dust |
| 16 | 340-88 | 2 | Fitting-Straight |
| 16:1 | 237-22 | 1 | O-Ring |
| 16:2 | 237-78 | 1 | O-Ring |

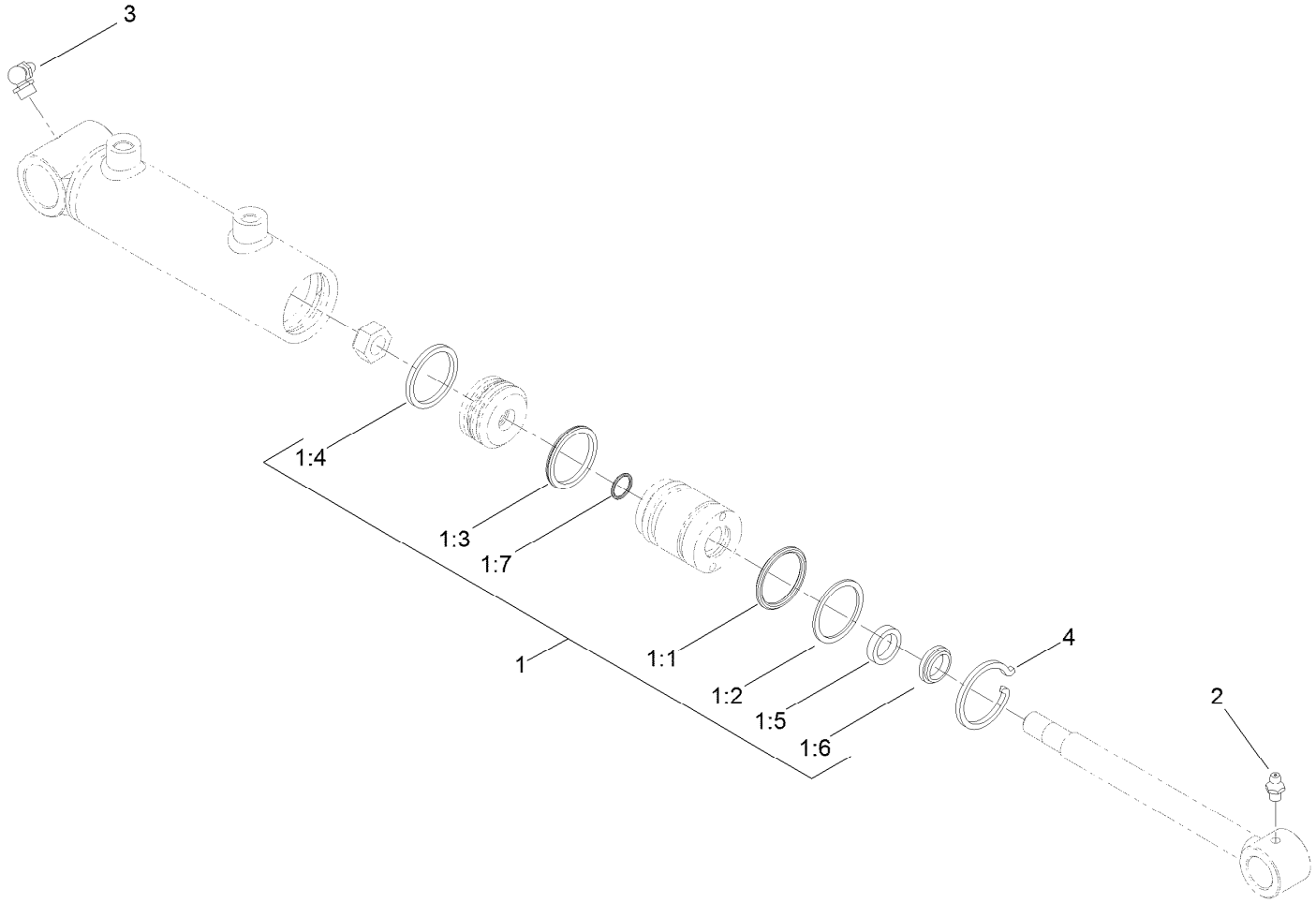


# Hydraulic Cylinder Assembly No. 119-6989

| *Ref.* | *Part Number* | *Qty.* | *Description* |
|---|---|---|---|
| 1 | 119-6992 | 1 | Seal Kit |
| 1:1 | | 1 | O-Ring ● |
| 1:2 | | 1 | Backup ● |
| 1:3 | | 1 | Bp Seal ● |
| 1:4 | | 1 | Wear Ring-Ht ● |
| 1:5 | | 1 | Bs Seal ● |
| 1:6 | | 1 | Dust Seal-Dt ● |
| 1:7 | | 1 | O-Ring ● |
| 2 | 302-5 | 1 | Fitting-Grease |
| 3 | 302-33 | 1 | Fitting-Grease |
| 4 | 84-1680 | 1 | Ring-Retaining |

● Not serviced separately

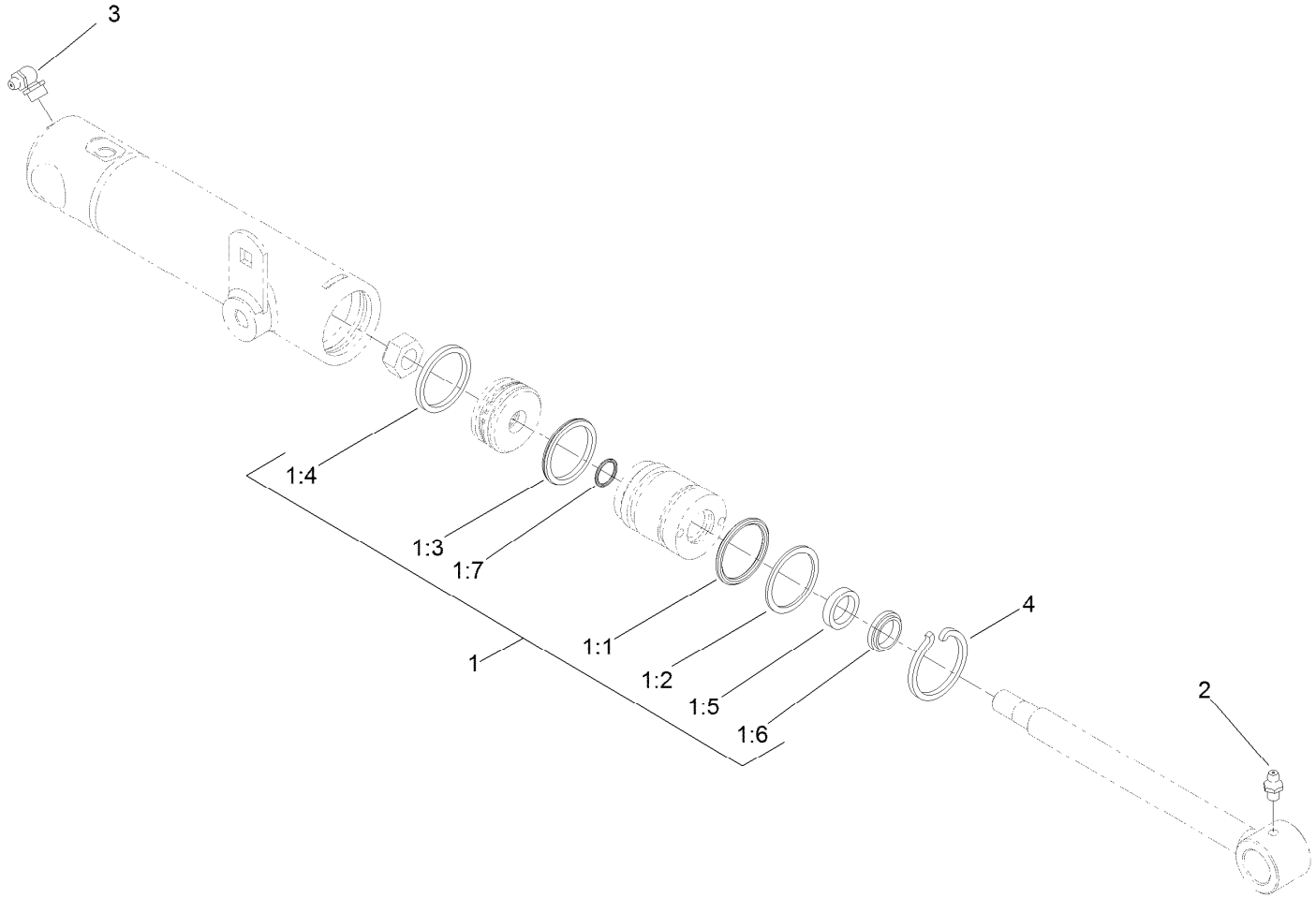


# Hydraulic Cylinder Assembly No. 119-6990

| *Ref.* | *Part Number* | *Qty.* | *Description* |
|---|---|---|---|
| 1 | 119-6992 | 1 | Seal Kit |
| 1:1 | | 1 | O-Ring ● |
| 1:2 | | 1 | Backup ● |
| 1:3 | | 1 | Bp Seal ● |
| 1:4 | | 1 | Wear Ring-Ht ● |
| 1:5 | | 1 | Bs Seal ● |
| 1:6 | | 1 | Dust Seal-Dt ● |
| 1:7 | | 1 | O-Ring ● |
| 2 | 302-5 | 1 | Fitting-Grease |
| 3 | 302-33 | 1 | Fitting-Grease |
| 4 | 84-1680 | 1 | Ring-Retaining |

● Not serviced separately

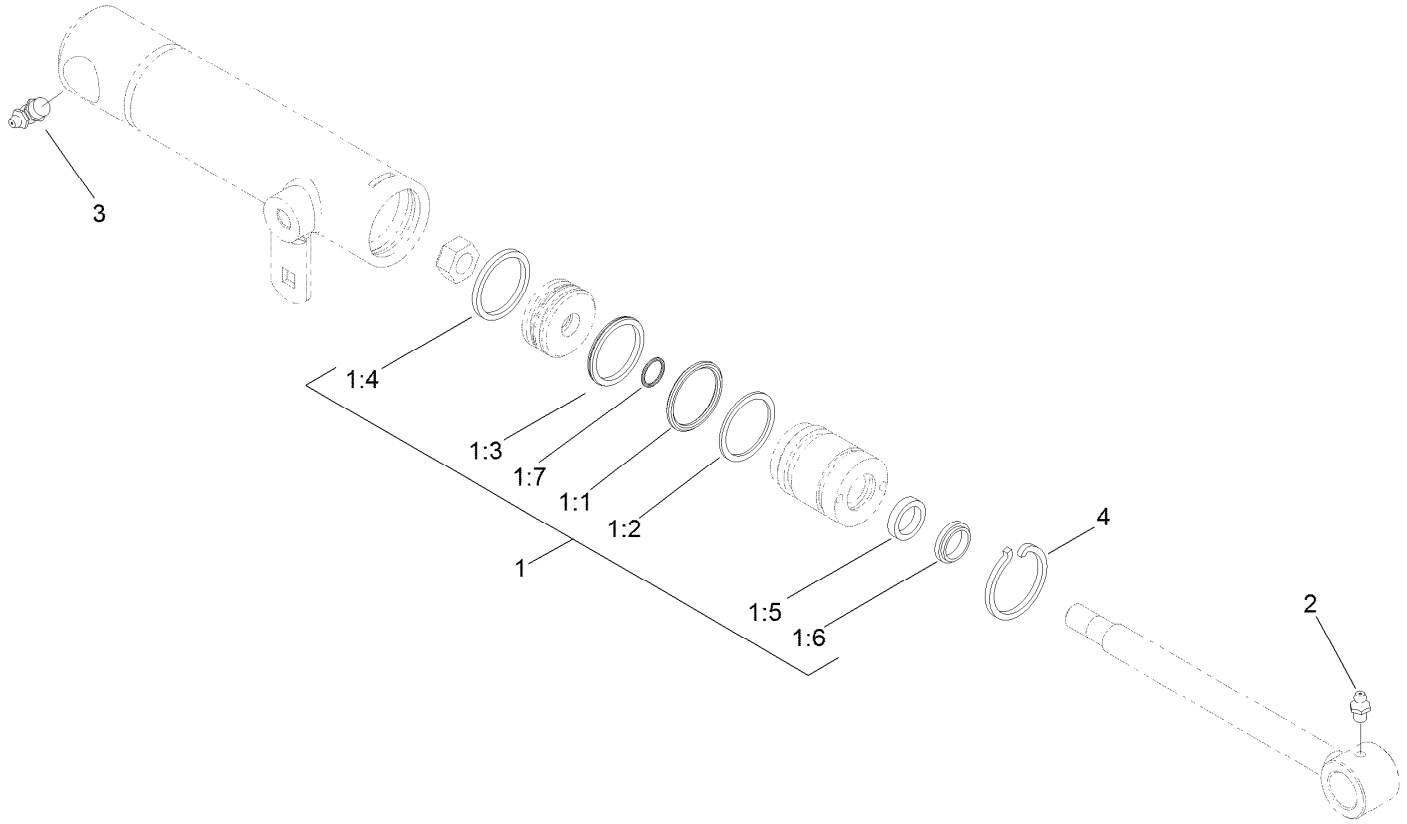


# Hydraulic Cylinder Assembly No. 119-6991

| *Ref.* | *Part Number* | *Qty.* | *Description* |
|---|---|---|---|
| 1 | 119-6992 | 1 | Seal Kit |
| 1:1 | | 1 | O-Ring ● |
| 1:2 | | 1 | Backup ● |
| 1:3 | | 1 | Bp Seal ● |
| 1:4 | | 1 | Wear Ring-Ht ● |
| 1:5 | | 1 | Bs Seal ● |
| 1:6 | | 1 | Dust Seal-Dt ● |
| 1:7 | | 1 | O-Ring ● |
| 2 | 302-5 | 1 | Fitting-Grease |
| 3 | 302-33 | 1 | Fitting-Grease |
| 4 | 84-1680 | 1 | Ring-Retaining |

● Not serviced separately

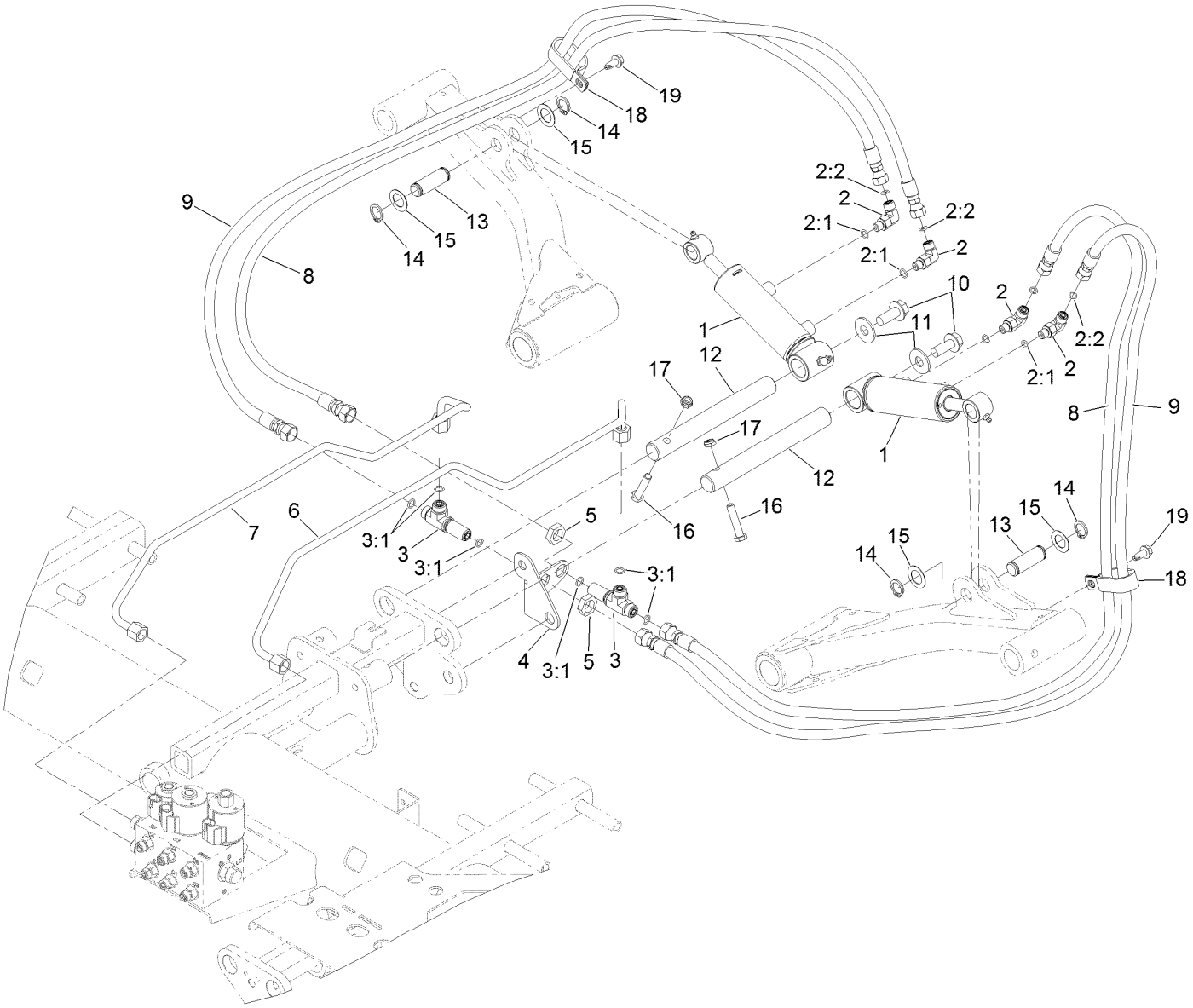


# Deck No. 2 and 3 Lift Circuit Hydraulic Assembly

| Ref. | Part Number | Qty. | Description |
|---|---|---|---|
| 1 | 119-6988 | 2 | HYD Cylinder ASM |
| 2 | 340-132 | 4 | Fitting-Elbow, 90 DEG |
| 2:1 | 237-78 | 1 | O-Ring |
| 2:2 | 237-21 | 1 | O-Ring |
| 3 | 340-68 | 2 | Fitting-Tee, Bulkhead |
| 3:1 | 237-22 | 3 | O-Ring |
| 4 | 117-0179 | 1 | Bracket-Bulkhead |
| 5 | 340-70 | 2 | Nut-Lock |
| 6 | 117-0175 | 1 | Tube-HYD |
| 7 | 117-0176 | 1 | Tube-HYD |
| 8 | 105-5402 | 2 | Hose-HYD |

| Ref. | Part Number | Qty. | Description |
|---|---|---|---|
| 9 | 105-5405 | 2 | Hose-HYD |
| 10 | 3234-38 | 2 | Screw-HHF |
| 11 | 3256-6 | 2 | Washer-Flat |
| 12 | 117-0148 | 2 | Pin-Cylinder |
| 13 | 104-0046 | 2 | Pin-Slide, Cylinder |
| 14 | 32120-93 | 4 | Ring-Retaining |
| 15 | 3-6498 | 4 | Washer-Thrust |
| 16 | 323-9 | 2 | Screw-HH |
| 17 | 3296-59 | 2 | Nut-Lock, NI |
| 18 | 2412-137 | 2 | Clamp-R, Double |
| 19 | 32104-32 | 2 | Screw-HWH |

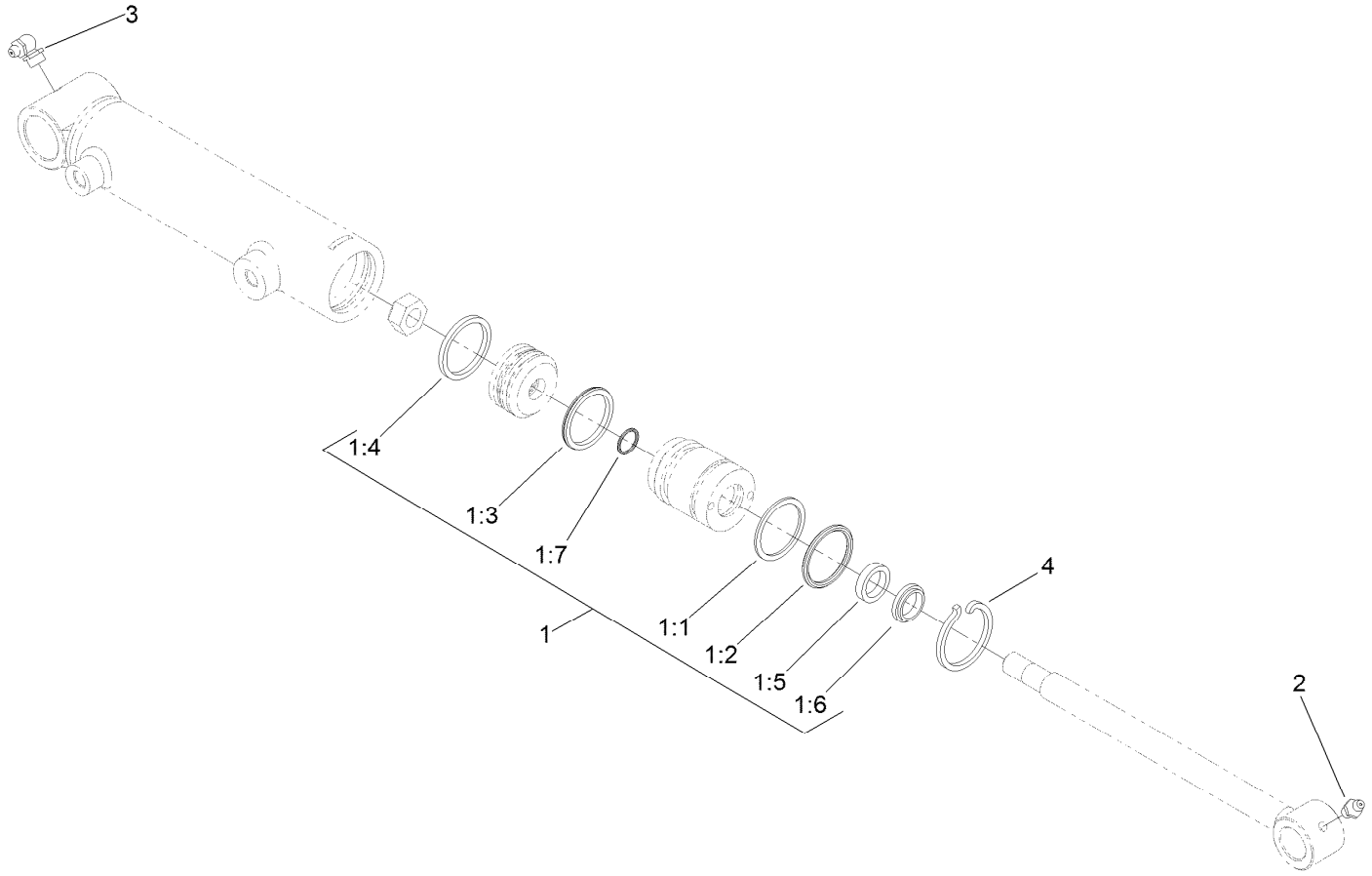


# Hydraulic Cylinder Assembly No. 119-6988

| *Ref.* | *Part Number* | *Qty.* | *Description* |
|---|---|---|---|
| 1 | 119-6992 | 1 | Seal Kit |
| 1:1 | | 1 | O-Ring ● |
| 1:2 | | 1 | Backup ● |
| 1:3 | | 1 | Bp Seal ● |
| 1:4 | | 1 | Wear Ring-Ht ● |
| 1:5 | | 1 | Bs Seal ● |
| 1:6 | | 1 | Dust Seal-Dt ● |
| 1:7 | | 1 | O-Ring ● |
| 2 | 302-5 | 1 | Fitting-Grease |
| 3 | 302-33 | 1 | Fitting-Grease |
| 4 | 84-1680 | 1 | Ring-Retaining |

● Not serviced separately

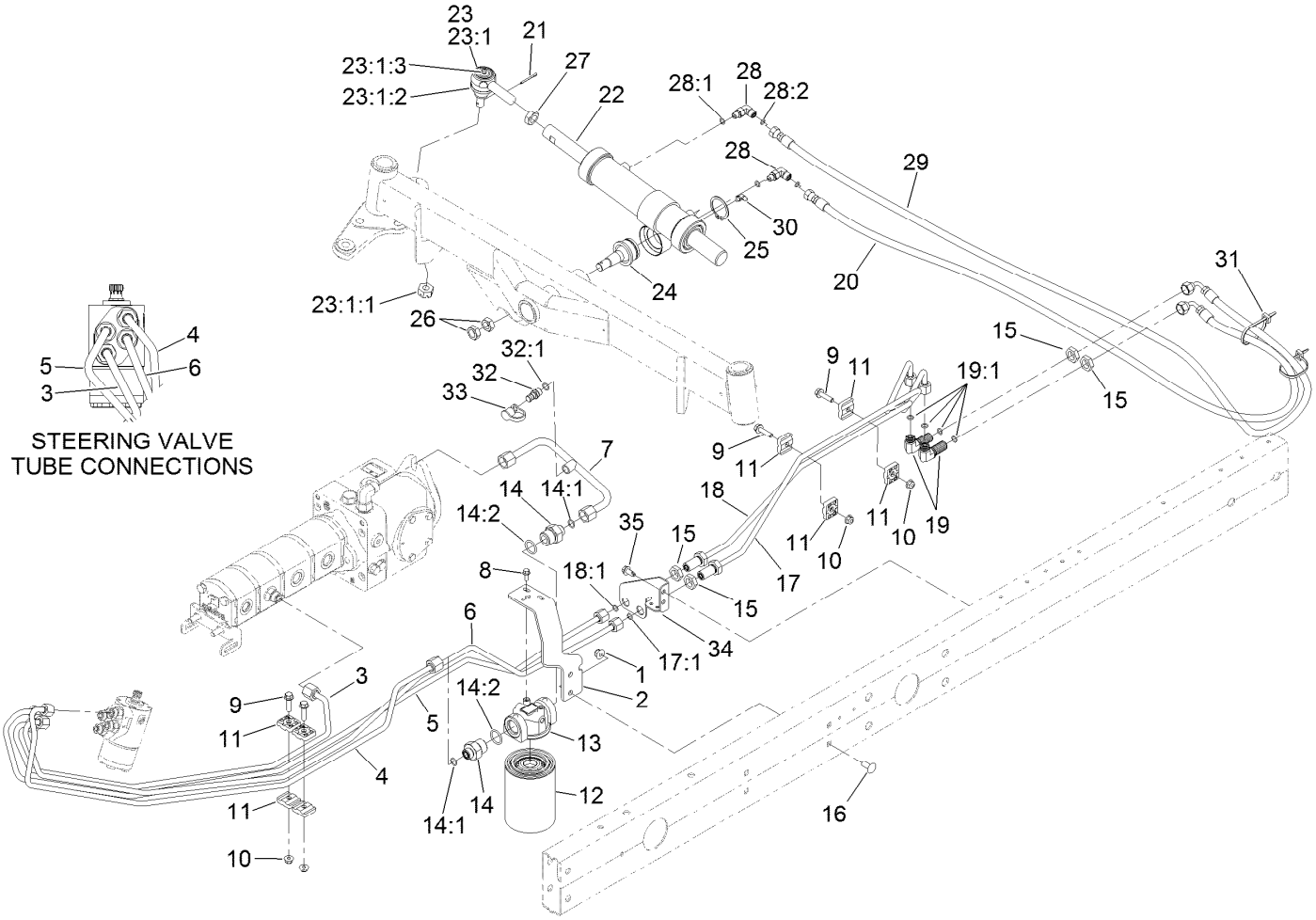


# Steering Hydraulic Assembly

| Ref. | Part Number | Qty. | Description |
|---|---|---|---|
| 1 | 104-8301 | 2 | Nut-HF, NI |
| 2 | 110-0906-01 | 1 | Support-Filter, Oil |
| 3 | 117-0167 | 1 | Tube-HYD |
| 4 | 108-1711 | 1 | Tube-HYD |
| 5 | 120-3764 | 1 | Tube-HYD |
| 6 | 120-3765 | 1 | Tube-HYD |
| 7 | 121-5601 | 1 | Tube-HYD |
| 8 | 3234-33 | 2 | Screw-HHF |
| 9 | 3234-36 | 4 | Screw-HHF |
| 10 | 104-8300 | 4 | Nut-HF, NI |
| 11 | 56-7973 | 8 | Clamp-Tube |
| 12 | 86-3010 | 1 | Filter-Oil |
| 13 | 117-5820 | 1 | Head-Filter |
| 14 | 100-4240 | 2 | Fitting-STR |
| 14:1 | 237-30 | 1 | O-Ring |
| 14:2 | 237-81 | 1 | O-Ring |
| 15 | 340-70 | 4 | Nut-Lock |
| 16 | 3231-27 | 2 | Screw-CARR |

| Ref. | Part Number | Qty. | Description |
|---|---|---|---|
| 17 | 120-3763 | 1 | HYD Tube ASM |
| 17:1 | 237-22 | 1 | O-Ring |
| 18 | 121-5586 | 1 | HYD Tube ASM |
| 18:1 | 237-22 | 1 | O-Ring |
| 19 | 340-154 | 2 | Union-Bulkhead |
| 19:1 | 237-22 | 2 | O-Ring |
| 20 | 110-0928 | 1 | Hose-HYD |
| 21 | 3272-12 | 1 | Pin-Cotter |
| 22 | 114-0403 | 1 | HYD Steering Cylinder ASM |
| 23 | 71-4740-03 | 1 | RH Tie Rod End ASM |
| 23:1 | | 1 | End-Rod, Tie (RH) ● |
| 23:1:1 | 105-7941 | 1 | Nut-Hex, Slotted |
| 23:1:2 | 105-7835 | 1 | Seal |
| 23:1:3 | 302-5 | 1 | Fitting-Grease |
| 24 | 106-6774 | 1 | Joint-Ball |
| 25 | 32151-104 | 1 | Ring-Retaining, External |
| 26 | 3220-6 | 2 | Nut-Jam |
| 27 | 84-5300 | 1 | Nut-Jam |

● Not serviced separately

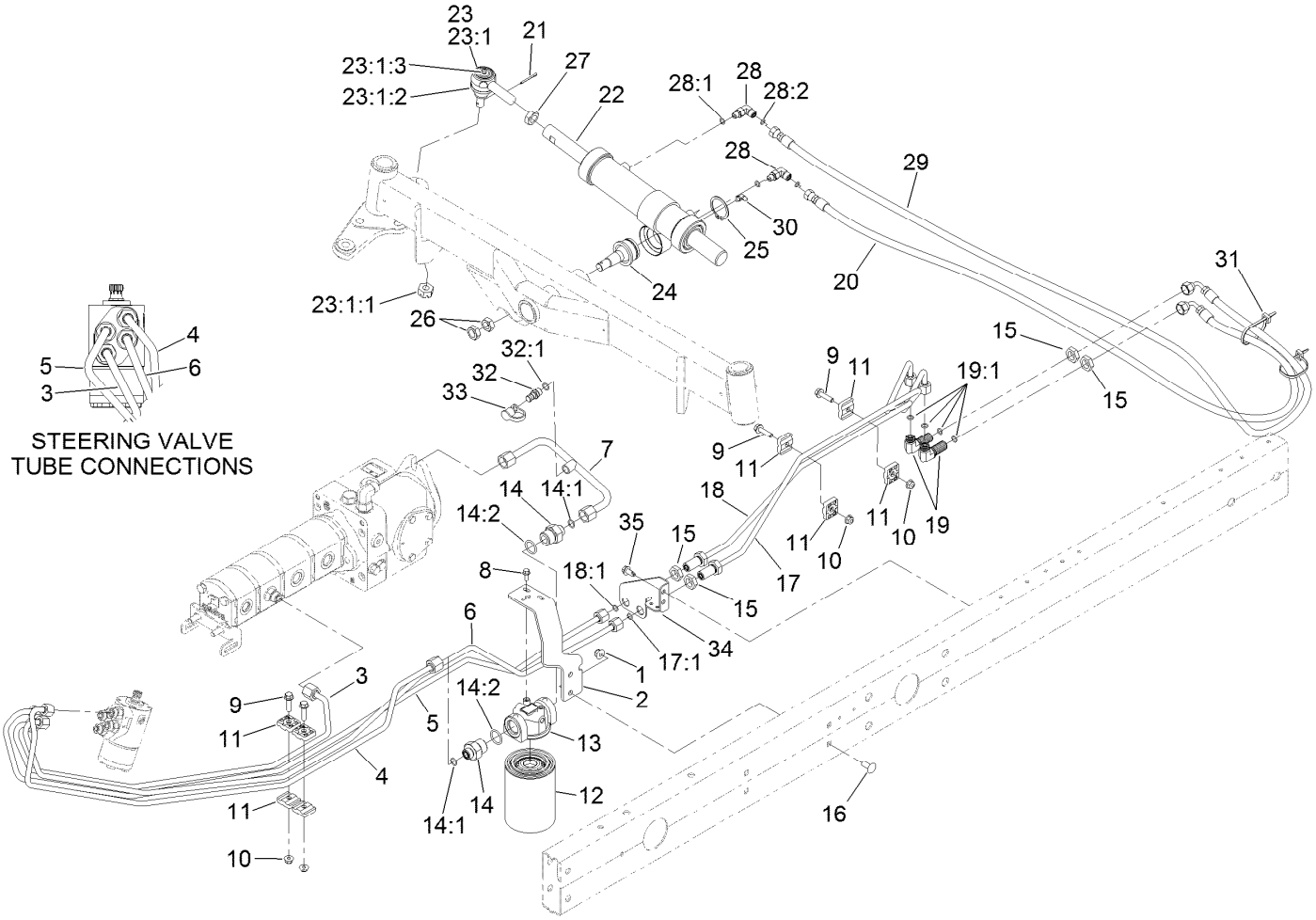


# Steering Hydraulic Assembly (continued)

| Ref. | Part Number | Qty. | Description |
|---|---|---|---|
| 28 | 340-132 | 2 | Fitting-Elbow, 90 DEG |
| 28:1 | 237-78 | 1 | O-Ring |
| 28:2 | 237-21 | 1 | O-Ring |
| 29 | 110-0973 | 1 | Hose-HYD |
| 30 | 302-40 | 1 | Fitting-Grease, 90 DEG |
| 31 | 3290-378 | 2 | Tie-Cable |

| Ref. | Part Number | Qty. | Description |
|---|---|---|---|
| 32 | 59-7410 | 1 | Fitting-Diagnostic |
| 32:1 | 237-42 | 1 | O-Ring |
| 33 | 354-79 | 1 | Cap-Dust |
| 34 | 120-3781-01 | 1 | Bracket-Bulhead, Steer |
| 35 | 32104-32 | 2 | Screw-HWH |

● Not serviced separately

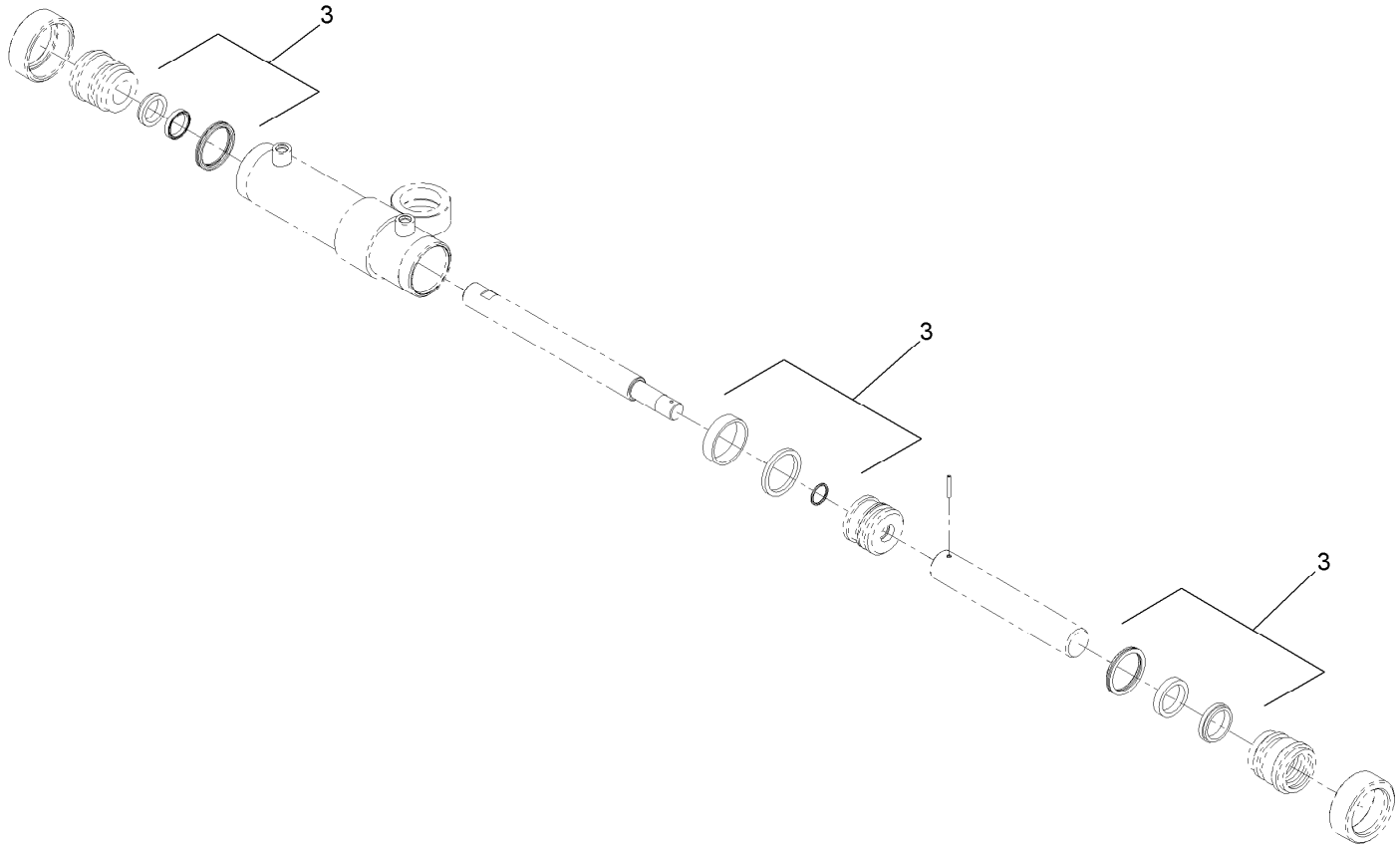


# Hydraulic Cylinder Assembly No. 114-0403

| *Ref.* | *Part Number* | *Qty.* | *Description* |
|---|---|---|---|
| 3 | 114-0404 | 1 | Cylinder Repair Kit |

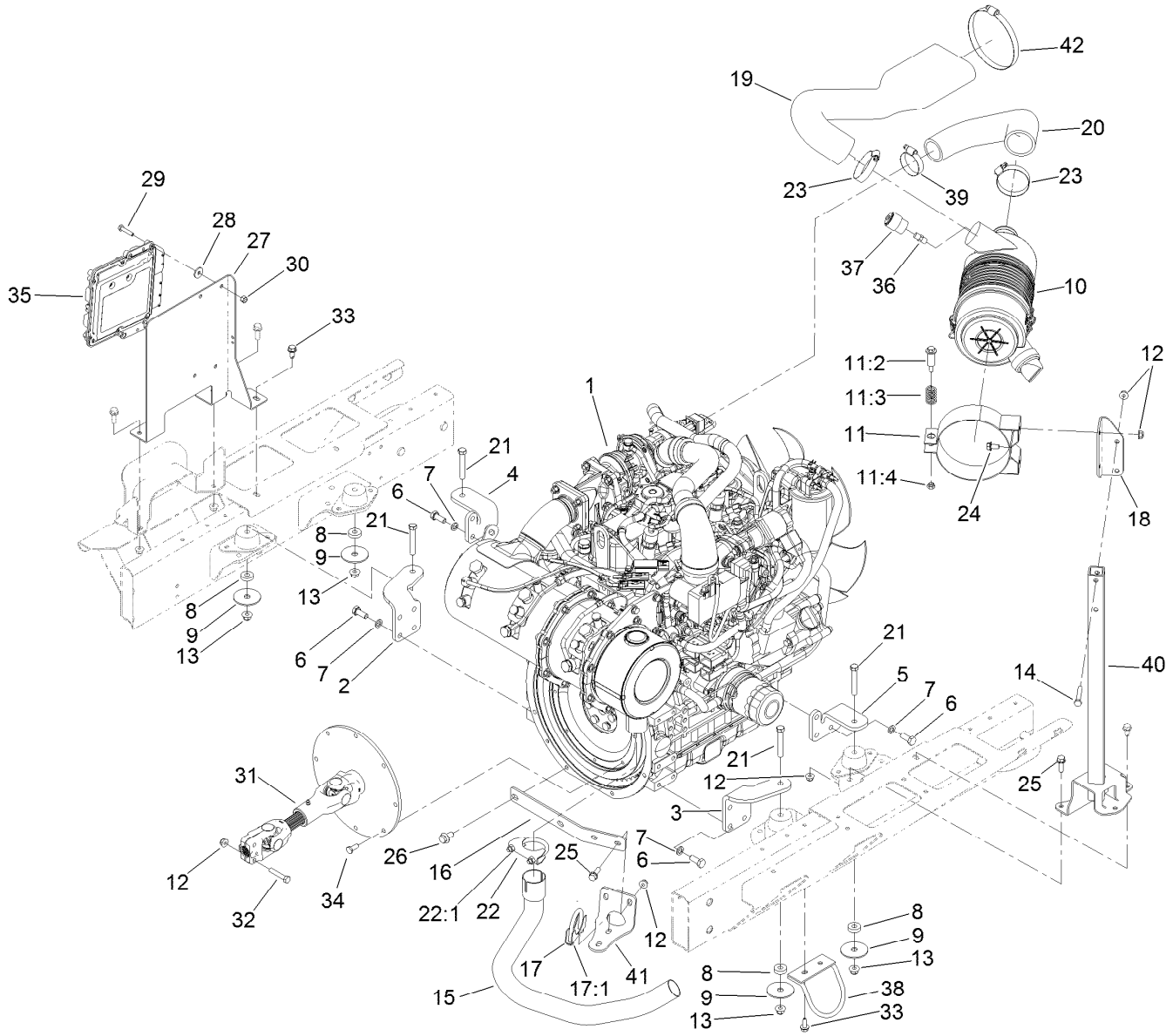


# Engine, Driveshaft and Air Cleaner Assembly

| Ref. | Part Number | Qty. | Description |
|---|---|---|---|
| 1 | 120-3797 | 1 | Engine-Yanmar, 3Tnv86Ct-Dtr |
| 2 | 120-3777-03 | 1 | Mount-Engine, Right Front |
| 3 | 120-3778-03 | 1 | Mount-Engine, Left Front |
| 4 | 120-3779-03 | 1 | Mount-Engine, Right Rear |
| 5 | 120-3780-03 | 1 | Mount-Engine, Left Rear |
| 6 | 33115-025 | 14 | Screw-HH |
| 7 | 48-9590 | 14 | Washer-Lock |
| 8 | 62-6660 | 4 | Spacer |
| 9 | 87-5100 | 4 | Washer-Snubbing |
| 10 | 98-4517 | 1 | Air Cleaner ASM |
| 11 | 100-4825 | 1 | Band-Mounting, Air Cleaner |
| 11:2 | 94-3653 | 1 | Bolt |
| 11:3 | 94-3654 | 1 | Spring |
| 11:4 | 48-9510 | 1 | Nut |
| 12 | 104-8300 | 10 | Nut-HF, NI |
| 13 | 104-8301 | 4 | Nut-HF, NI |
| 14 | 322-10 | 2 | Screw-HH |
| 15 | 120-3790 | 1 | Tube-Exhaust |
| 16 | 121-5594-03 | 1 | Bracket-Tailpipe |
| 17 | 2112-9 | 1 | Clamp |

| Ref. | Part Number | Qty. | Description |
|---|---|---|---|
| 17:1 | 32128-20 | 2 | Nut-HF |
| 18 | 120-6298-03 | 1 | Bracket-Aircleaner |
| 19 | 121-5559 | 1 | Hose-Air Cleaner |
| 20 | 121-5560 | 1 | Hose-Air Cleaner |
| 21 | 323-12 | 4 | Screw-HH |
| 22 | 2112-6 | 1 | Clamp-Muffler |
| 22:1 | 3218-2 | 2 | Nut-Hex Jam |
| 23 | 2412-125 | 2 | Clamp-Hose |
| 24 | 3234-14 | 2 | Screw-HHF |
| 25 | 3234-29 | 4 | Screw-HHF |
| 26 | 33105-020 | 2 | Screw-HHF |
| 27 | 120-3791-03 | 1 | Bracket-Ecu |
| 28 | 66-2921 | 4 | Washer-Friction |
| 29 | 321-8 | 4 | Screw-HH |
| 30 | 3296-42 | 4 | Nut-Lock, NI |
| 31 | 120-3756 | 1 | Driveshaft ASM |
| 32 | 322-9 | 2 | Screw-HH |
| 33 | 32104-32 | 3 | Screw-HWH |
| 34 | 33114-020 | 8 | Screw-HH |
| 35 | 121-5592 | 1 | Electronic Control Unit |
| 36 | 94-1416 | 1 | Adapter-Indicator |

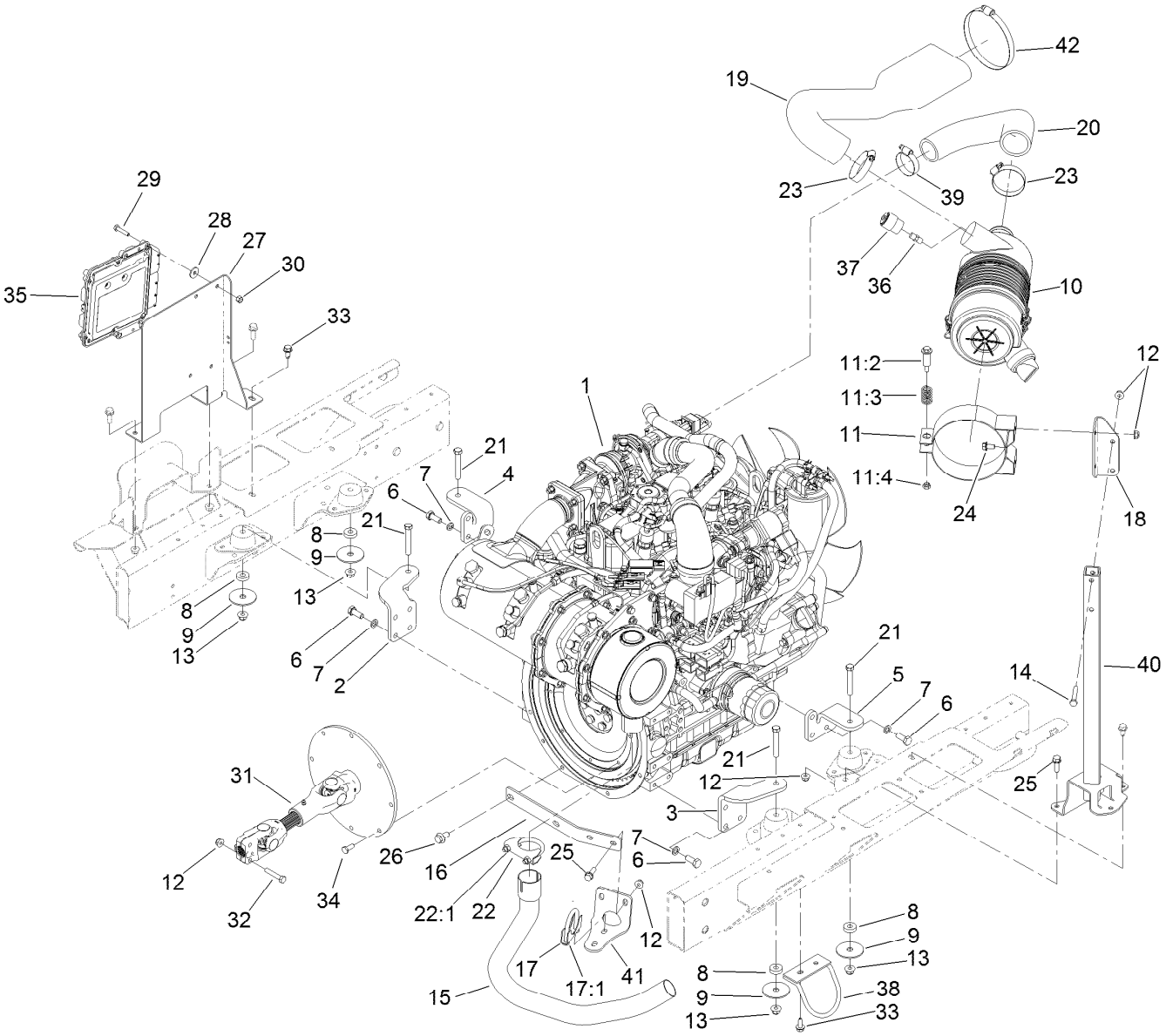


# Engine, Driveshaft and Air Cleaner Assembly (continued)

| Ref. | Part Number | Qty. | Description |
|---|---|---|---|
| 37 | 93-9164 | 1 | Indicator-Mini |
| 38 | 110-8999 | 1 | Guard-Muffler |
| 39 | 2412-3 | 1 | Clamp-Hose |

| Ref. | Part Number | Qty. | Description |
|---|---|---|---|
| 40 | 120-2949-03 | 1 | Stand |
| 41 | 121-5595-03 | 1 | Bracket-Tailpipe |
| 42 | 2412-140 | 1 | Clamp-Hose |

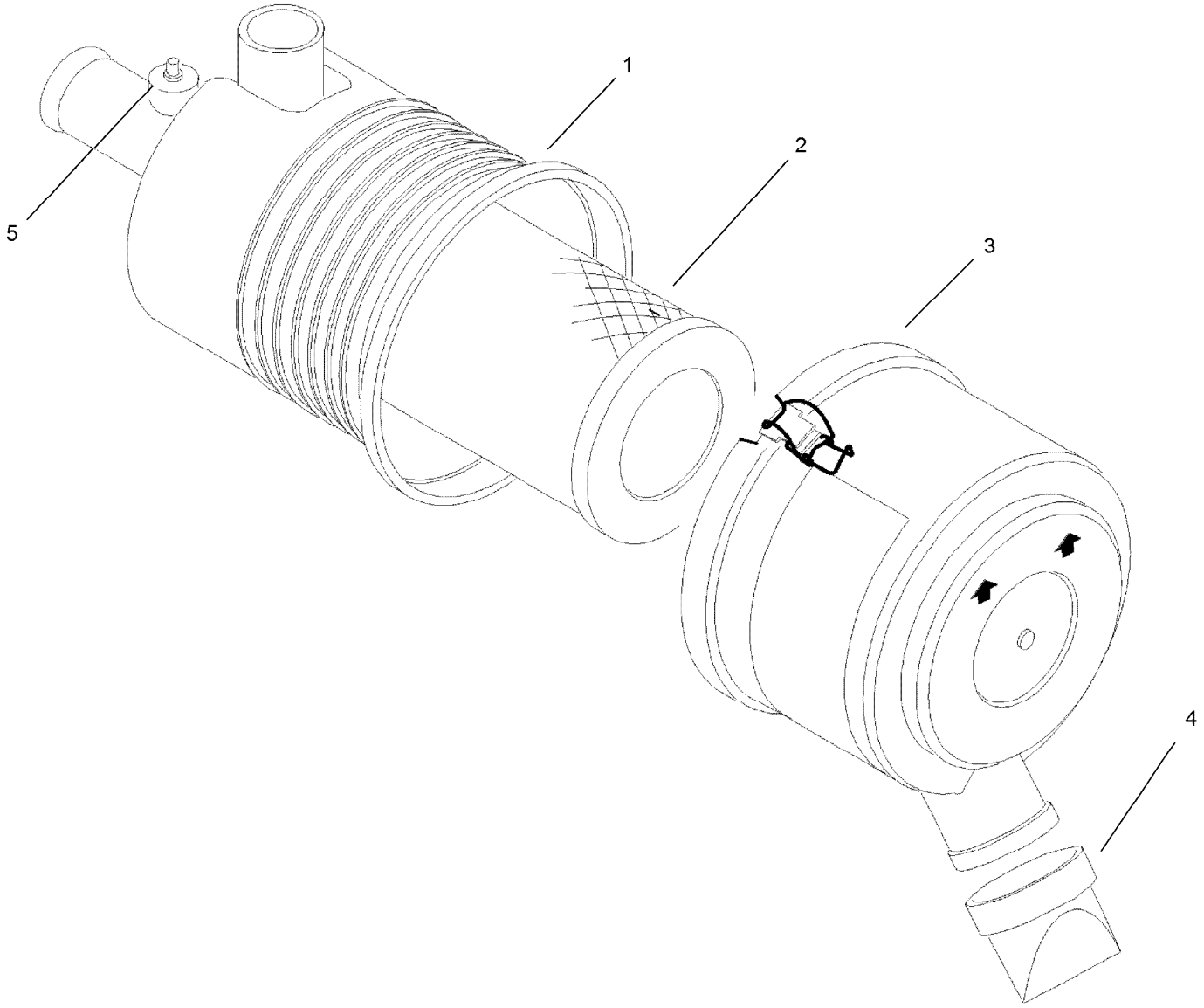


# Air Cleaner Assembly No. 98-4517

| Ref. | Part Number | Qty. | Description |
|---|---|---|---|
| 1 | | 1 | Body ASM ● |
| 2 | 108-3810 | 1 | Filter-Air |
| 3 | 98-9771 | 1 | Cover ASM |
| 4 | 87-9400 | 1 | Valve-Vacuator |
| 5 | | 1 | Plug ● |

● Not serviced separately

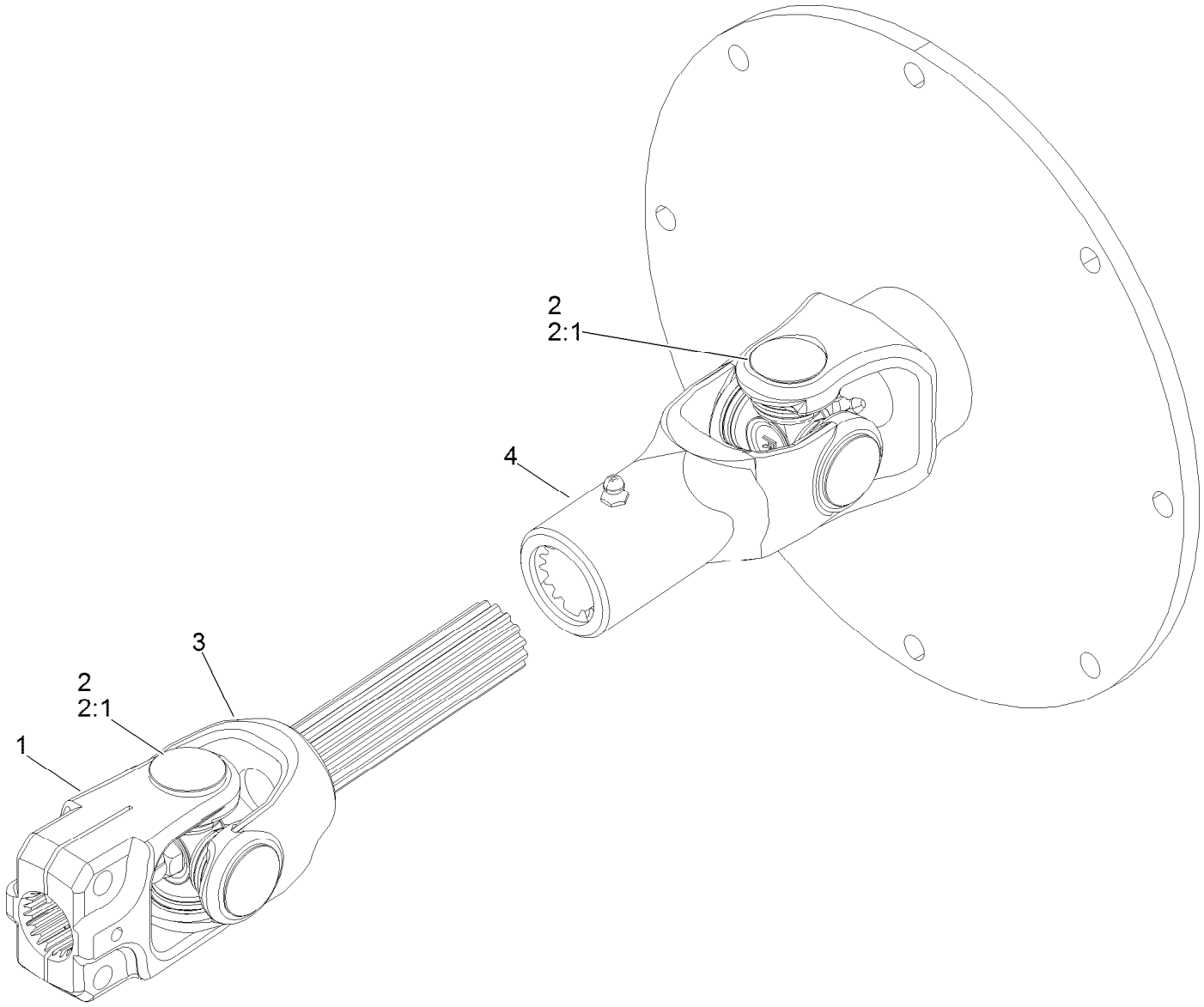


# Drive Shaft Assembly No. 120-3756

| *Ref.* | *Part Number* | *Qty.* | *Description* |
|---|---|---|---|
| 1 | 54-9040 | 1 | Yoke-End |
| 2 | 54-9180 | 2 | U-Joint Kit |
| 2:1 | 62-3820 | 1 | Fitting-Grease |
| 3 | 125-8768 | 1 | Joint And Shaft ASM |
| 4 | 125-8769 | 1 | Joint And Yoke ASM |

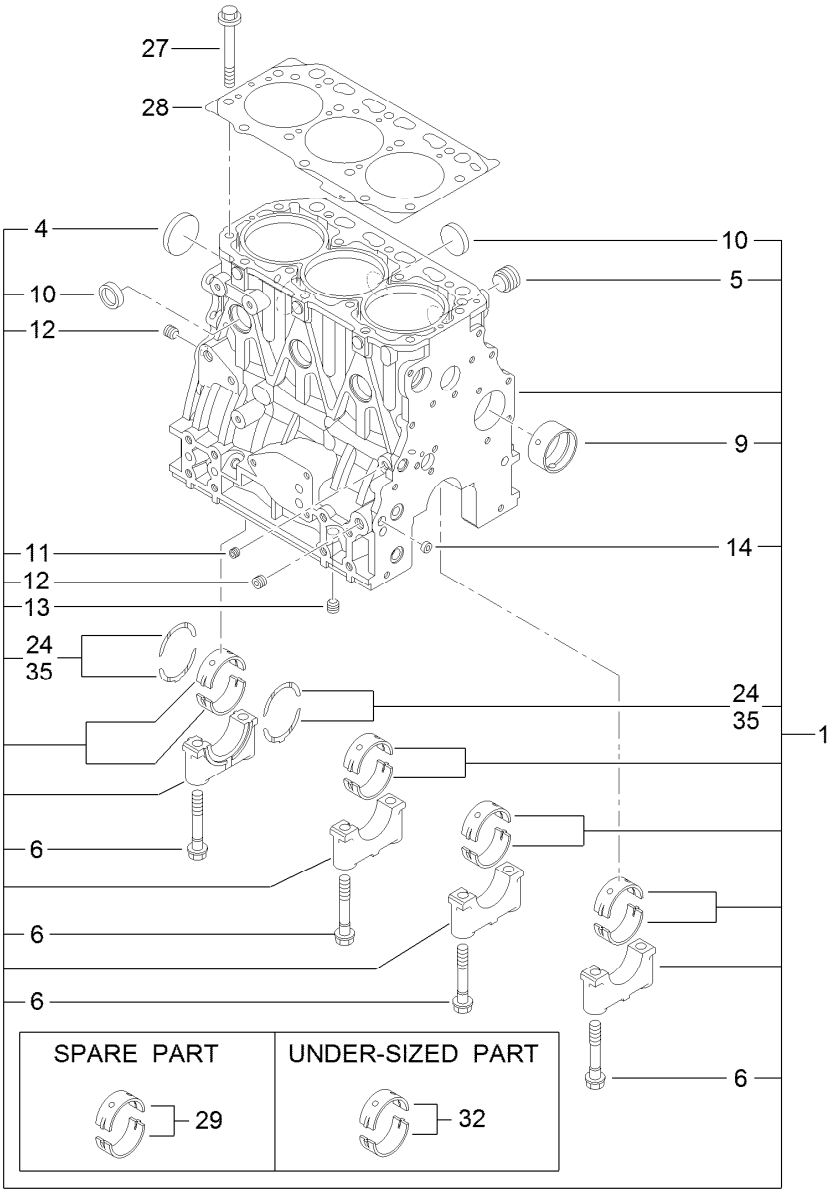


# Cylinder Block Assembly

| Ref. | Part Number | Qty. | Description |
|---|---|---|---|
| 1 | 127-3750 | 1 | Cylinder Block ASM |
| 4 | 125-6980 | 1 | Plug |
| 5 | 125-7170 | 1 | Plug |
| 6 | 125-7007 | 8 | Bolt |
| 9 | 125-7108 | 1 | Bushing |
| 10 | 125-7239 | 6 | Plug |
| 11 | 125-6969 | 1 | Plug |
| 12 | 125-6973 | 2 | Plug |

| Ref. | Part Number | Qty. | Description |
|---|---|---|---|
| 13 | 125-6973 | 1 | Plug |
| 14 | 125-7237 | 1 | Plug |
| 24 | 125-7010 | 2 | Metal-Thrust |
| 27 | 125-7006 | 14 | Bolt |
| 28 | 127-3751 | 1 | Head Gasket ASM |
| 29 | 125-6981 | 4 | Metal-Main |
| 32 | 125-7009 | 4 | Metal-Main (0.25) |
| 35 | 125-7011 | 1 | Metal-Thrust (0.25) |

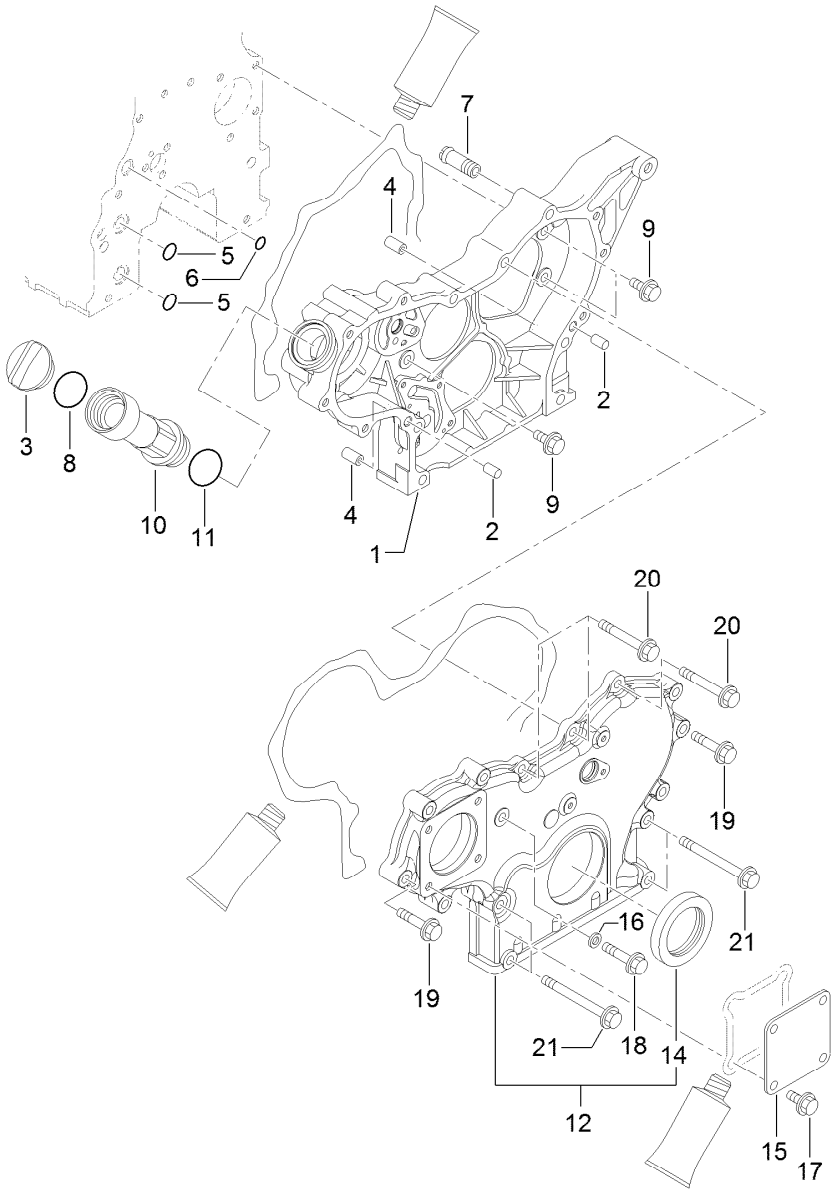


# Gear Housing Assembly

| Ref. | Part Number | Qty. | Description |
|---|---|---|---|
| 1 | 127-3752 | 1 | Case-Gear |
| 2 | 125-6995 | 2 | Pin |
| 3 | 125-6972 | 1 | Cover-Filler |
| 4 | 125-7107 | 2 | Pipe |
| 5 | 125-6909 | 2 | O-Ring |
| 6 | 127-2973 | 1 | O-Ring |
| 7 | 127-3753 | 1 | Joint |
| 8 | 125-7197 | 1 | O-Ring |
| 9 | 125-7214 | 3 | Bolt |
| 10 | 127-3754 | 1 | Pipe |

| Ref. | Part Number | Qty. | Description |
|---|---|---|---|
| 11 | 125-7197 | 1 | O-Ring |
| 12 | 127-3024 | 1 | Gearcase Cover ASM |
| 14 | 125-6944 | 1 | Seal-Oil |
| 15 | 125-6977 | 1 | Cover |
| 16 | 125-7174 | 1 | Washer-Seal |
| 17 | 125-7214 | 4 | Bolt |
| 18 | 125-7217 | 1 | Bolt |
| 19 | 125-7218 | 7 | Bolt |
| 20 | 125-7222 | 3 | Bolt |
| 21 | 125-7224 | 4 | Bolt |

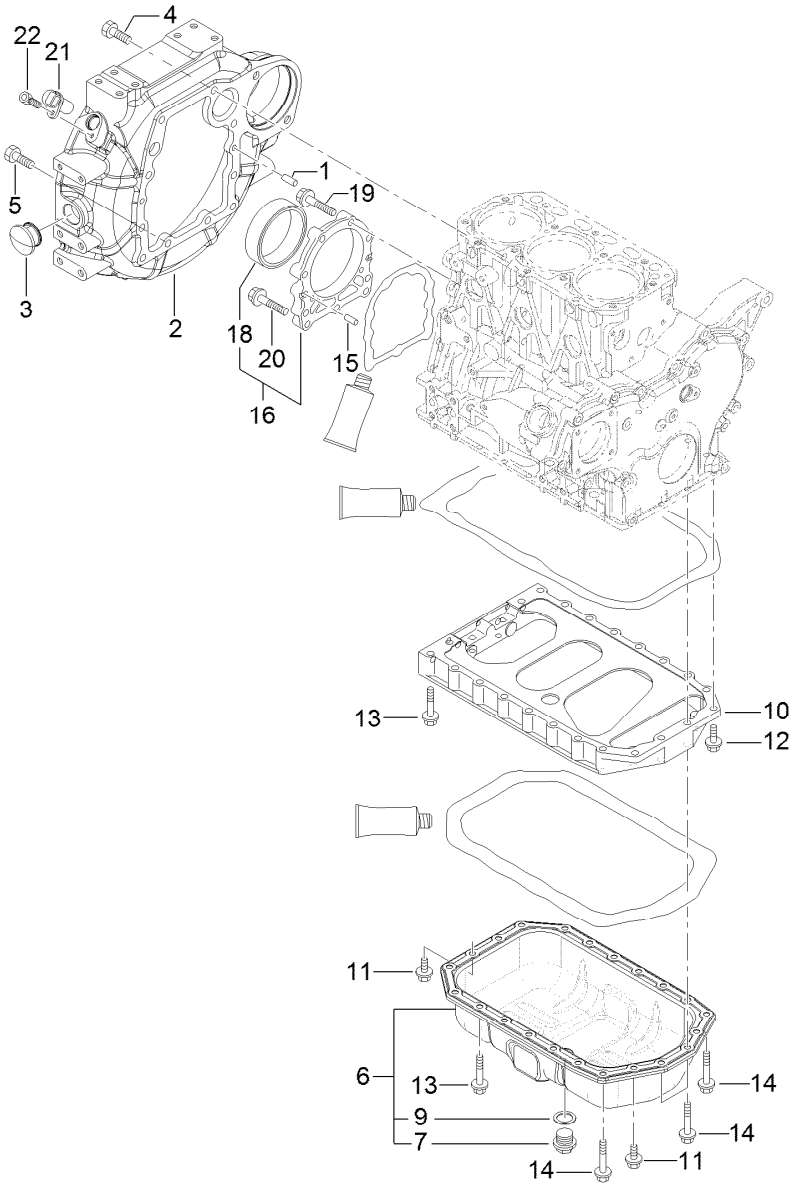


# Flywheel Housing and Oil Sump Assembly

| Ref. | Part Number | Qty. | Description |
|---|---|---|---|
| 1 | 125-6995 | 1 | Pin |
| 2 | 127-3025 | 1 | Housing-Flywheel |
| 3 | 125-6910 | 1 | Cap |
| 4 | 125-7226 | 6 | Bolt |
| 5 | 125-7227 | 4 | Bolt |
| 6 | 127-3755 | 1 | Oil Pan ASM |
| 7 | 125-6912 | 1 | Plug-Drain |
| 9 | 125-7177 | 1 | Washer-Seal |
| 10 | 127-3756 | 1 | Spacer |
| 11 | 125-7214 | 4 | Bolt |

| Ref. | Part Number | Qty. | Description |
|---|---|---|---|
| 12 | 125-7215 | 2 | Bolt |
| 13 | 125-7219 | 16 | Bolt |
| 14 | 125-7220 | 4 | Bolt |
| 15 | 125-6995 | 2 | Pin |
| 16 | 125-6996 | 1 | Case ASM |
| 18 | 125-7106 | 1 | Seal-Oil |
| 19 | 125-7045 | 6 | Bolt |
| 20 | 125-7217 | 3 | Bolt |
| 21 | 127-3062 | 1 | Sensor-Rev, Flywheel |
| 22 | 127-3184 | 1 | Bolt |

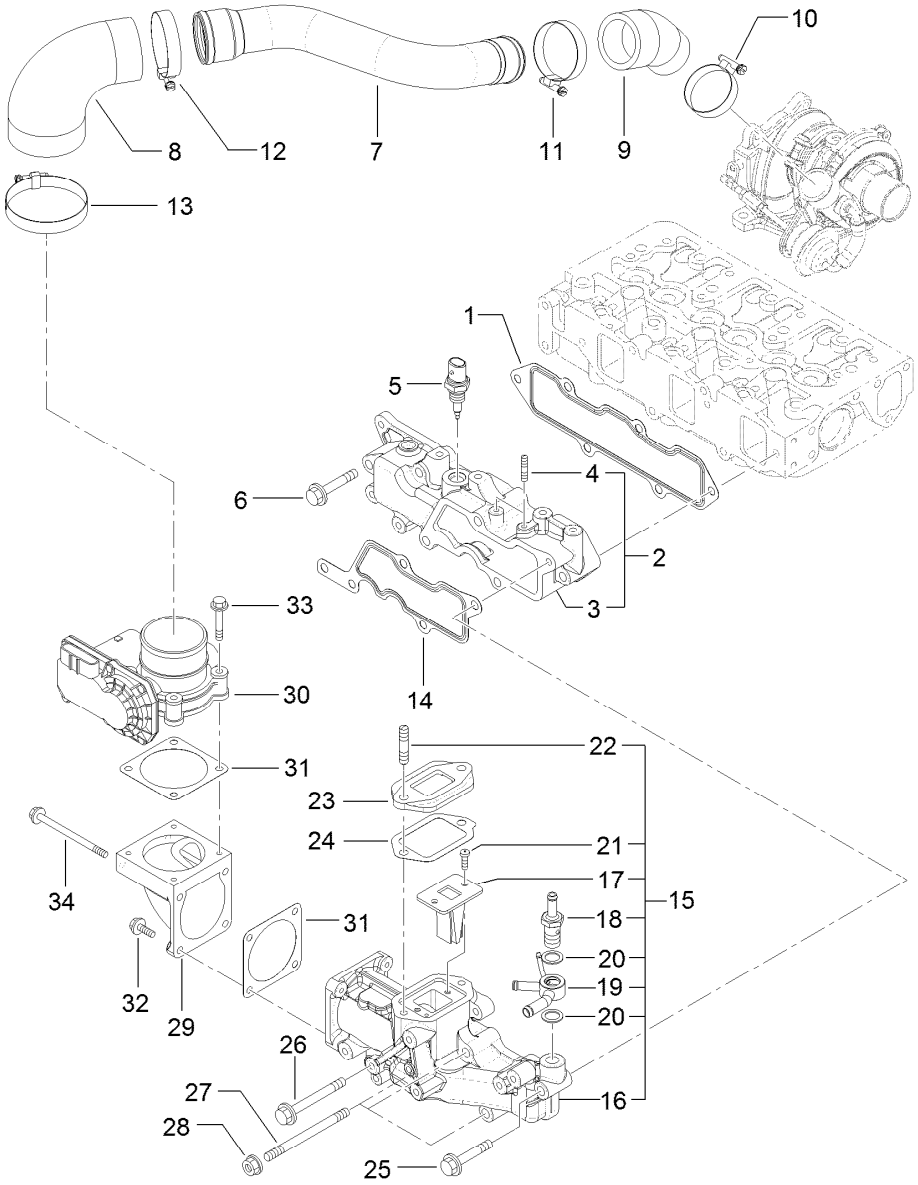


# Suction Manifold Assembly

| Ref. | Part Number | Qty. | Description |
|---|---|---|---|
| 1 | 127-3769 | 1 | Gasket-Manifold, Intake |
| 2 | 127-3770 | 1 | Intake Manifold ASM |
| 3 | 127-3771 | 1 | Manifold-Intake, Air |
| 4 | 127-3180 | 2 | Stud |
| 5 | 127-3031 | 1 | Sensor-Temp, Air |
| 6 | 125-7220 | 3 | Bolt |
| 7 | 127-3772 | 1 | Duct Suction |
| 8 | 127-3096 | 1 | Joint-Rubber |
| 9 | 127-3773 | 1 | Joint, Rubber |
| 10 | 125-7189 | 1 | Clamp-Hose |
| 11 | 127-3170 | 1 | Clamp-Hose |
| 12 | 125-7190 | 1 | Clamp-Hose |
| 13 | 127-3171 | 1 | Clamp-Hose |
| 14 | 127-3034 | 1 | Gasket-Collector |
| 15 | 127-3093 | 1 | Intake Collector ASM |
| 16 | 127-3092 | 1 | Collector-Intake |
| 17 | 127-3139 | 1 | Valve-Reed |

| Ref. | Part Number | Qty. | Description |
|---|---|---|---|
| 18 | 127-3080 | 1 | Joint-Hose |
| 19 | 127-3081 | 1 | Joint-Hose |
| 20 | 127-3166 | 1 | Washer-Seal |
| 21 | 127-3168 | 11 | Screw |
| 22 | 127-3181 | 1 | Stud |
| 23 | 127-3045 | 1 | Spacer-Valve, E G R |
| 24 | 127-3046 | 1 | Gasket-E G R |
| 25 | 125-7220 | 1 | Bolt |
| 26 | 127-3178 | 1 | Bolt |
| 27 | 127-3182 | 3 | Stud |
| 28 | 125-7229 | 3 | Nut |
| 29 | 127-3035 | 1 | Bend-Inlet |
| 30 | 127-3036 | 1 | Body-Throttle |
| 31 | 127-3037 | 2 | Gasket-Throttle |
| 32 | 125-7209 | 2 | Bolt |
| 33 | 125-7211 | 4 | Bolt |
| 34 | 127-3177 | 2 | Bolt |

# Cylinder Head and Cover Assembly

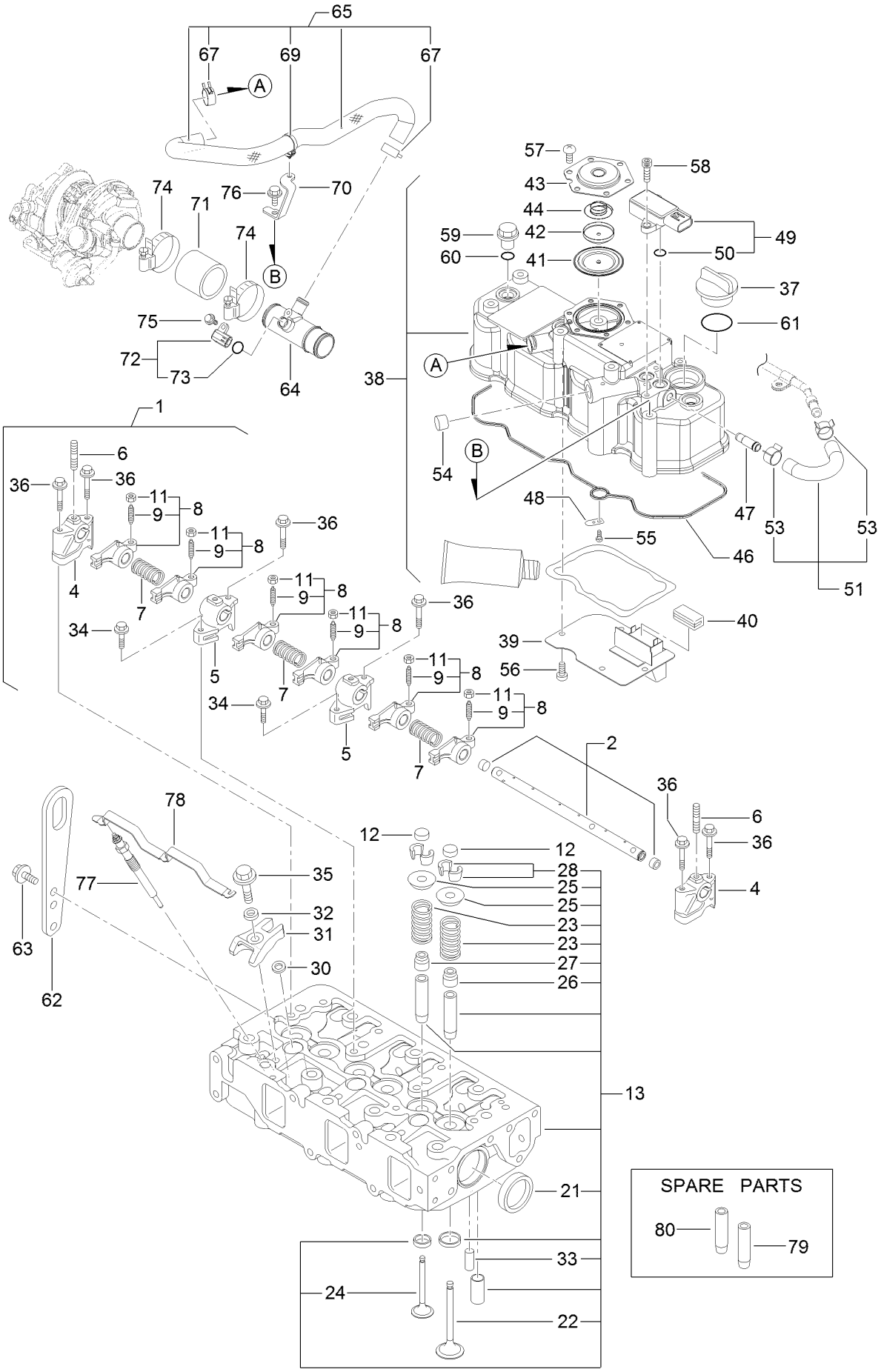

# Cylinder Head and Cover Assembly (continued)

| Ref. | Part Number | Qty. | Description |
|---|---|---|---|
| 1 | 127-3757 | 1 | Shaft ASM |
| 2 | 127-3758 | 1 | Shaft |
| 4 | 127-2974 | 2 | Support |
| 5 | 127-2975 | 2 | Support |
| 6 | 127-3759 | 3 | Stud |
| 7 | 127-2995 | 3 | Spring |
| 8 | 127-2989 | 6 | Arm-Rocker |
| 9 | 125-7013 | 6 | Screw-Adjust, Valve |
| 11 | 125-7014 | 6 | Nut |
| 12 | 127-2996 | 6 | Cap-Valve |
| 13 | 127-3760 | 1 | Cylinder Head ASM |
| 21 | 125-7240 | 2 | Plug |
| 22 | 127-2990 | 3 | Valve |
| 23 | 127-3012 | 6 | Spring |
| 24 | 127-2994 | 3 | Valve |
| 25 | 127-3013 | 6 | Retainer-Spring |
| 26 | 127-2986 | 3 | Seal-Stem, Valve |
| 27 | 127-3027 | 3 | Seal-Stem, Valve |
| 28 | 127-3186 | 6 | Pin-Cotter |
| 30 | 127-3021 | 3 | Gasket-Injector |
| 31 | 127-3028 | 3 | Retainer-Injector |
| 32 | 127-2980 | 3 | Washer-Injector |
| 33 | 125-7184 | 2 | Pin-Spring |
| 34 | 125-7215 | 2 | Bolt |
| 35 | 125-7217 | 3 | Bolt |
| 36 | 125-7220 | 6 | Bolt |
| 37 | 125-6972 | 1 | Cover-Filler |
| 38 | 127-3761 | 1 | Cylinder Head Cover ASM |
| 39 | 127-2988 | 1 | Plate |
| 40 | 125-7012 | 1 | Baffle |
| 41 | 125-6959 | 1 | Diaphragm |
| 42 | 125-6960 | 1 | Plate |
| 43 | 125-6961 | 1 | Plate-Breather |
| 44 | 125-6962 | 1 | Spring-Diaphragm |
| 46 | 127-3762 | 1 | Gasket-Cover, Cylinder Head |
| 47 | 127-3026 | 1 | Joint |
| 48 | 125-6994 | 1 | Spring |
| 49 | 127-3029 | 1 | Sensor-Pressure |
| 50 | 127-3032 | 2 | O Ring-Sensor, Pressure |
| 51 | 127-3040 | 1 | Hose ASM |
| 53 | 127-3041 | 2 | Clip-Hose |
| 54 | 125-6913 | 1 | Plug |
| 55 | 125-7186 | 1 | Screw |
| 56 | 125-7186 | 4 | Screw |
| 57 | 125-7186 | 6 | Screw |
| 58 | 127-3184 | 2 | Bolt |
| 59 | 125-6974 | 3 | Knob |
| 60 | 93-0418 | 3 | O-Ring |
| 61 | 125-7197 | 1 | O-Ring |
| 62 | 125-7111 | 1 | Lifter |
| 63 | 125-7214 | 2 | Bolt |
| 64 | 127-3763 | 1 | Joint-Breather |
| 65 | 127-3764 | 1 | Hose Breather ASM |
| 67 | 125-7040 | 2 | Clip-Hose |
| 69 | 127-3087 | 1 | Band-Clip |
| 70 | 127-3765 | 1 | Stay-Hose, Breather |
| 71 | 127-3766 | 1 | Hose, Air |
| 72 | 127-3030 | 1 | Sensor-Temp, Air |
| 73 | 127-3033 | 1 | O-Ring |
| 74 | 127-3767 | 2 | Clamp 50 |
| 75 | 125-7208 | 1 | Bolt |
| 76 | 92-0803 | 1 | Bolt |
| 77 | 127-2991 | 3 | Plug-Glow |
| 78 | 127-3768 | 1 | Connector-Plug, Glow |
| 79 | 127-2979 | 3 | Guide |
| 80 | 127-2997 | 3 | Guide-Valve |

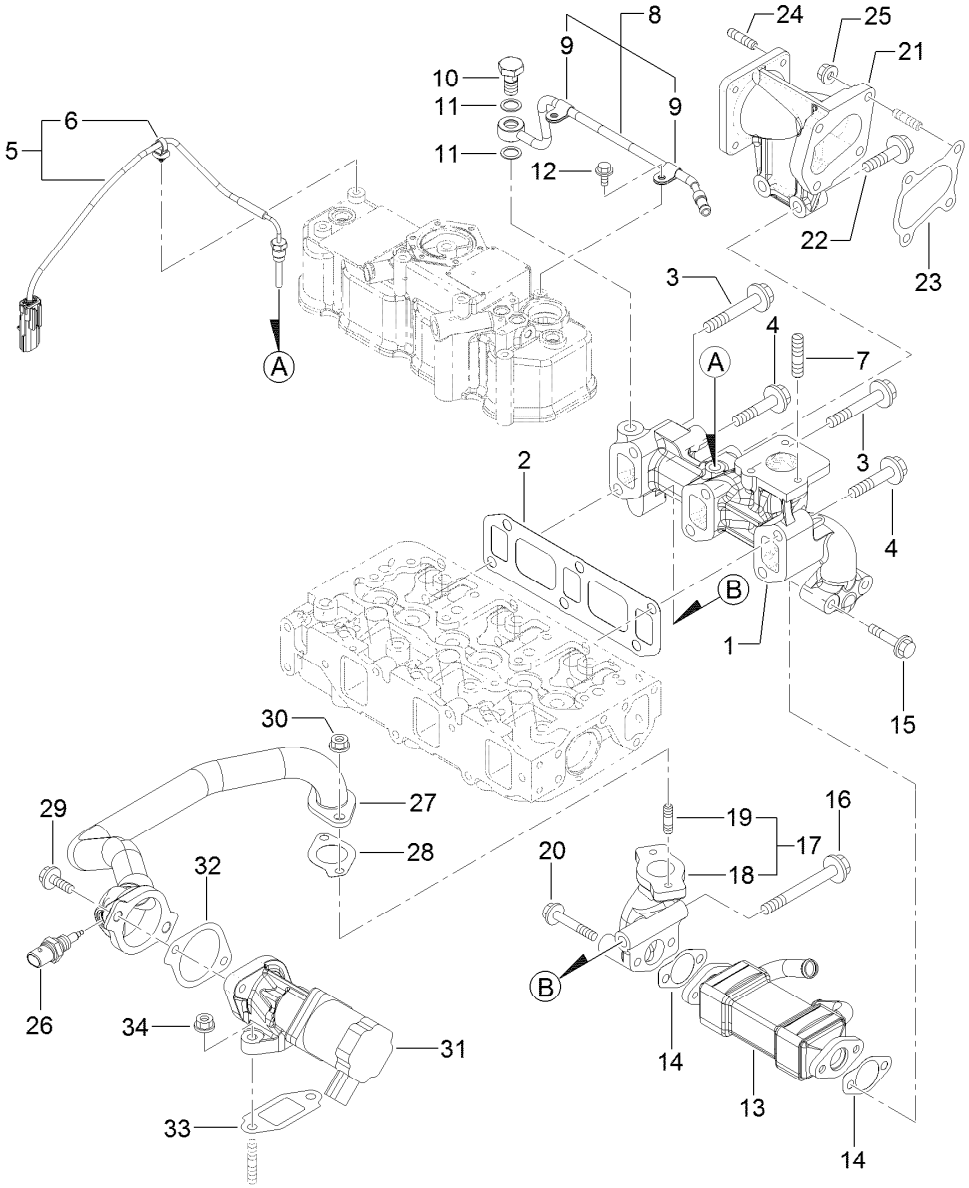


# Exhaust Manifold Assembly

| Ref. | Part Number | Qty. | Description |
|---|---|---|---|
| 1 | 127-3774 | 1 | Manifold-Exhaust |
| 2 | 127-3775 | 1 | Gasket-Manifold, Exhaust |
| 3 | 127-3776 | 4 | Bolt-Flange |
| 4 | 127-3094 | 2 | Bolt |
| 5 | 127-3777 | 1 | Sensor-Temp, Exhaust |
| 6 | 127-3087 | 1 | Band-Clip |
| 7 | 125-7043 | 3 | Stud |
| 8 | 127-3038 | 1 | Exhaust Pipe ASM |
| 9 | 127-3173 | 2 | Clamp |
| 10 | 127-3039 | 1 | Bolt-Joint, Pipe |
| 11 | 127-3174 | 2 | Gasket |
| 12 | 125-7206 | 2 | Bolt |
| 13 | 127-3042 | 1 | Cooler-E G R |
| 14 | 127-3043 | 2 | Gasket-Cooler, E G R |
| 15 | 127-2976 | 2 | Bolt |
| 16 | 127-3022 | 1 | Bolt-Flange |
| 17 | 127-3048 | 1 | E G R Pipe ASM |

| Ref. | Part Number | Qty. | Description |
|---|---|---|---|
| 18 | 127-3049 | 1 | Pipe-Out, E G R |
| 19 | 125-7043 | 2 | Stud |
| 20 | 125-7220 | 2 | Bolt |
| 21 | 127-3778 | 1 | Pipe Extension ASM |
| 22 | 127-3138 | 2 | Bolt-Flange |
| 23 | 127-3779 | 1 | Gasket-Out, T C |
| 24 | 125-6906 | 4 | Stud |
| 25 | 125-7229 | 4 | Nut |
| 26 | 127-3047 | 1 | Sensor-Gas Temp, E G R |
| 27 | 127-3780 | 1 | E G R Pipe ASM |
| 28 | 127-3016 | 1 | Gasket |
| 29 | 125-7215 | 2 | Bolt |
| 30 | 125-7229 | 2 | Nut |
| 31 | 127-3781 | 1 | Valve-E G R |
| 32 | 127-3050 | 1 | Gasket-Intake Valve, E G R |
| 33 | 127-3051 | 1 | Gasket-Out Valve, E G R |
| 34 | 125-7229 | 2 | Nut |

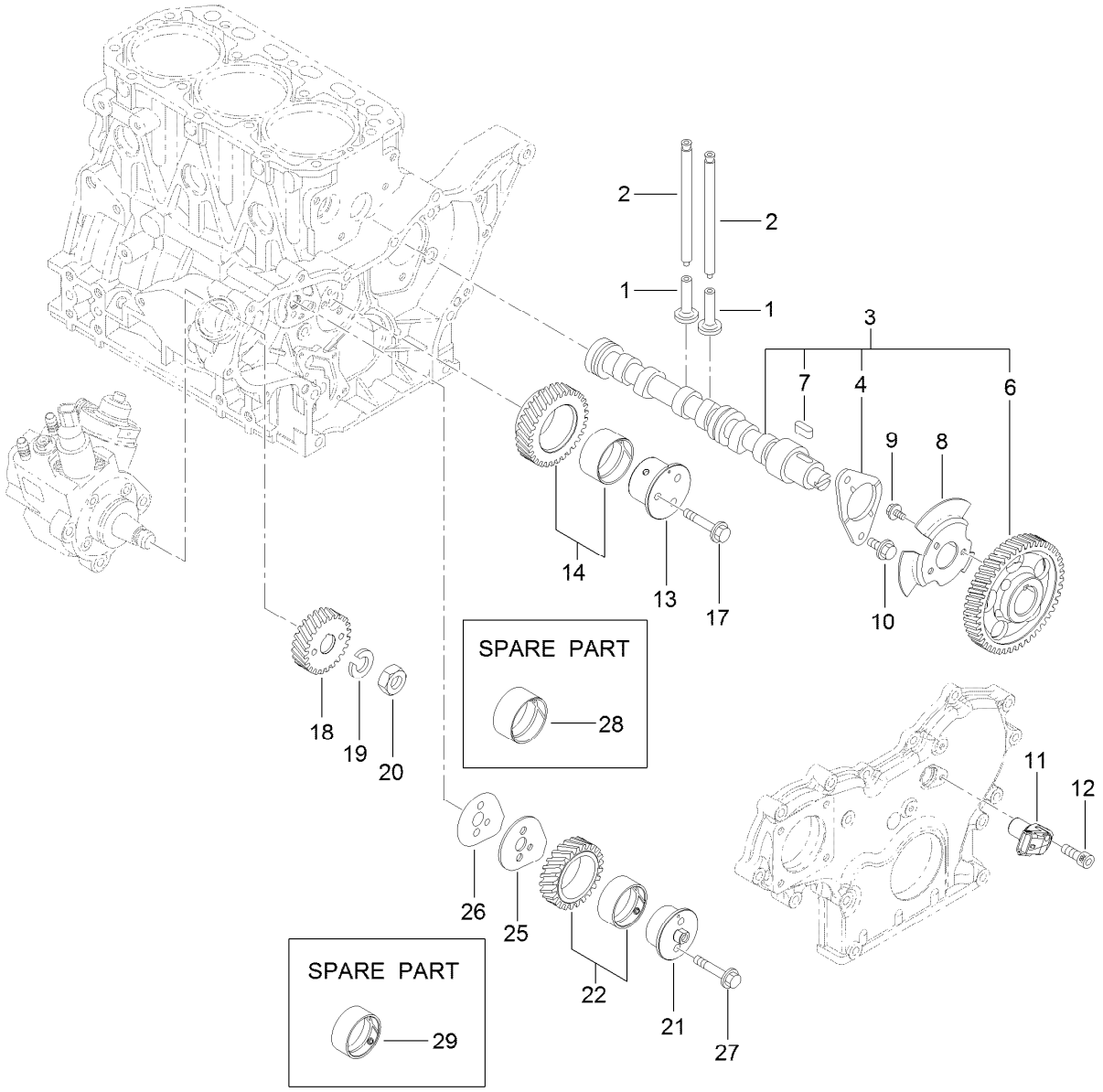


# Camshaft and Driving Gear Assembly

| Ref. | Part Number | Qty. | Description |
|---|---|---|---|
| 1 | 125-7016 | 6 | Tappet |
| 2 | 125-7017 | 6 | Rod-Push |
| 3 | 127-3797 | 1 | Camshaft ASM |
| 4 | 125-7008 | 1 | Metal-Thrust |
| 6 | 127-3052 | 1 | Gear-Camshaft |
| 7 | 125-7185 | 1 | Key |
| 8 | 127-3053 | 1 | Pulser-Camshaft |
| 9 | 125-7205 | 3 | Bolt |
| 10 | 125-7213 | 2 | Bolt |
| 11 | 127-3054 | 1 | Sensor-Rev, Gear |
| 12 | 127-3184 | 1 | Bolt |
| 13 | 127-3063 | 1 | Shaft-Idle, Gear A |

| Ref. | Part Number | Qty. | Description |
|---|---|---|---|
| 14 | 127-3066 | 1 | Idle Gear A ASM |
| 17 | 125-7219 | 3 | Bolt |
| 18 | 127-3070 | 1 | Gear-Pump, Supply |
| 19 | 127-3167 | 1 | Washer-Spring |
| 20 | 127-3185 | 1 | Nut-Lock |
| 21 | 127-3064 | 1 | Shaft-Idle, Gear B |
| 22 | 127-3067 | 1 | Idle Gear B ASM |
| 25 | 127-3068 | 1 | Plate-Idle, Shaft |
| 26 | 127-3069 | 1 | Gasket-Idle, Shaft B |
| 27 | 125-7218 | 2 | Bolt |
| 28 | 125-6927 | 1 | Bushing |
| 29 | 127-3065 | 1 | Bushing |

# Diesel Particulate Filter Assembly

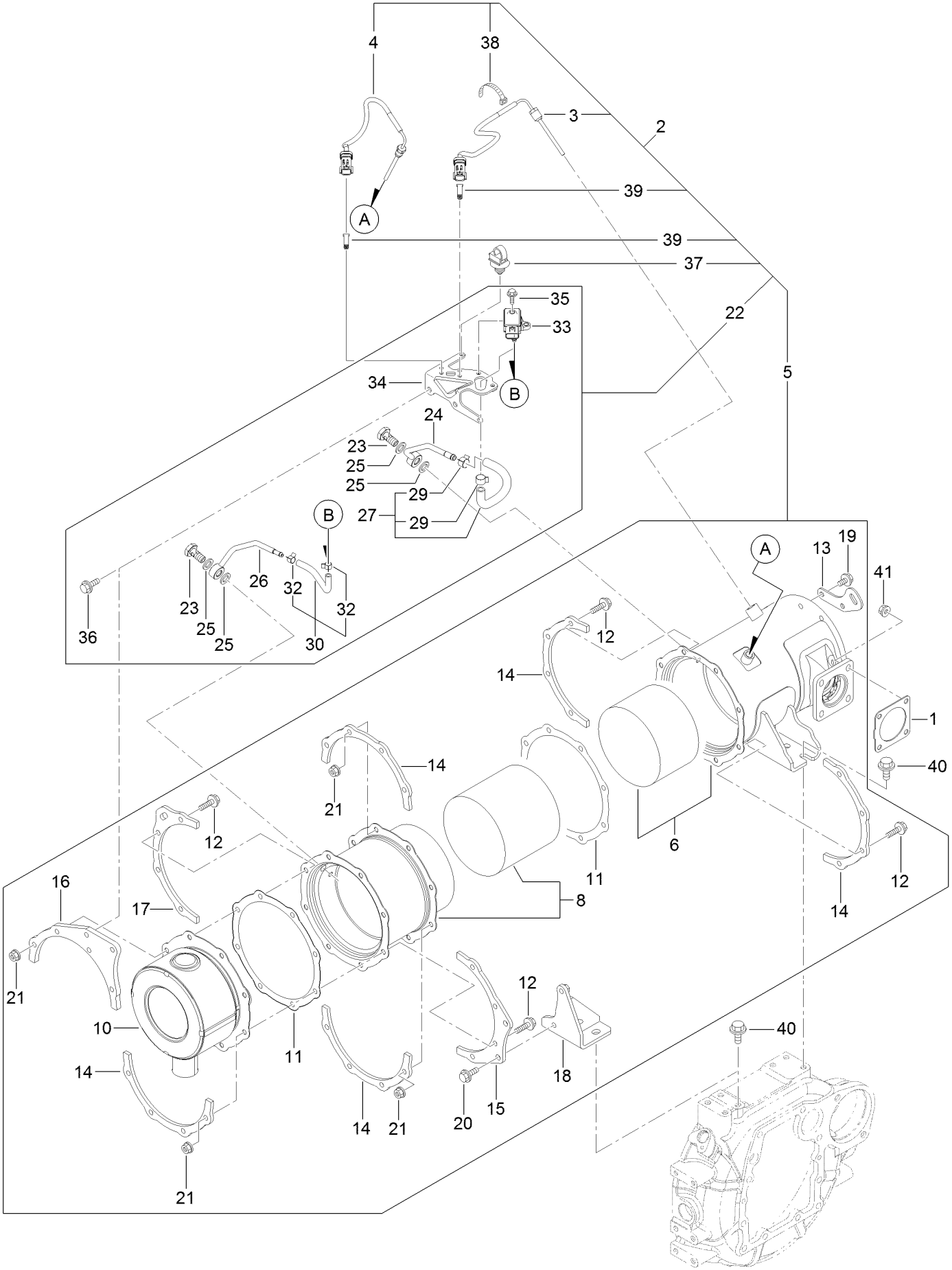

# Diesel Particulate Filter Assembly (continued)

| Ref. | Part Number | Qty. | Description |
|---|---|---|---|
| 1 | 127-3019 | 1 | Gasket |
| 2 | 127-3782 | 1 | *obs* D P F Unit |
| 3 | 127-3111 | 1 | Sensor-Temp, Exhaust |
| 4 | 127-3112 | 1 | Sensor-Temp, Exhaust |
| 5 | 127-3783 | 1 | D P F ASM |
| 6 | 127-3784 | 1 | Case-D O C |
| 8 | 127-3785 | 1 | Case-Filter, Soot |
| 10 | 127-3786 | 1 | Silencer-D P F |
| 11 | 127-3787 | 2 | Gasket-D P F |
| 12 | 127-3055 | 16 | Bolt |
| 13 | 127-3788 | 1 | Lifter-D P F |
| 14 | 127-3789 | 5 | Stiffener-D P F, A |
| 15 | 127-3790 | 1 | Stiffener-D P F, B |
| 16 | 127-3791 | 1 | Stiffener-D P F, C |
| 17 | 127-3792 | 1 | Stiffener-D P F, C |
| 18 | 127-3793 | 1 | Stay-D P F |
| 19 | 125-7213 | 2 | Bolt |
| 20 | 125-7594 | 2 | Bolt |
| 21 | 125-7229 | 16 | Nut |

| Ref. | Part Number | Qty. | Description |
|---|---|---|---|
| 22 | 127-3794 | 1 | Pressure Sensor Unit |
| 23 | 127-3039 | 2 | Bolt-Joint, Pipe |
| 24 | 127-3795 | 1 | Pipe-Sensor |
| 25 | 127-3056 | 4 | Gasket-Sensor |
| 26 | 127-3796 | 1 | Pipe-Sensor |
| 27 | 127-3114 | 1 | Exhaust Hose ASM |
| 29 | 127-3057 | 2 | Clip-Hose |
| 30 | 127-3059 | 1 | Exhaust Pressure Hose ASM |
| 32 | 127-3058 | 2 | Clip-Hose |
| 33 | 127-3060 | 1 | Sensor-Pressure |
| 34 | 127-3061 | 1 | Bracket-Sensor, Pressure |
| 35 | 125-7208 | 2 | Bolt |
| 36 | 125-7595 | 2 | Bolt |
| 37 | 127-3087 | 1 | Band-Clip |
| 38 | 127-3124 | 1 | Band |
| 39 | 127-3088 | 2 | Clip-Connnector |
| 40 | 127-3179 | 4 | Bolt |
| 41 | 125-7229 | 4 | Nut |

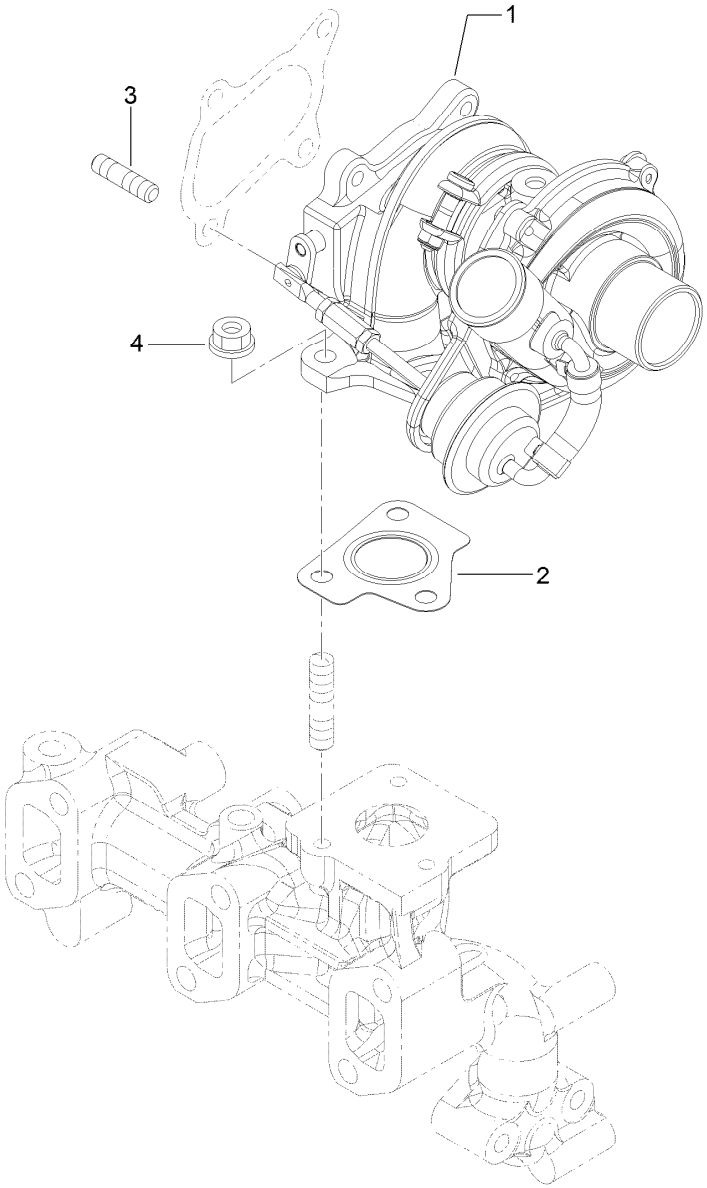


# Turbine Assembly

| Ref. | Part Number | Qty. | Description |
|---|---|---|---|
| 1 | 127-3798 | 1 | R H F 3 Turbine ASM |
| 2 | 127-3799 | 1 | Gasket-In, T C |
| 3 | 125-6906 | 4 | Stud |
| 4 | 125-7229 | 3 | Nut |

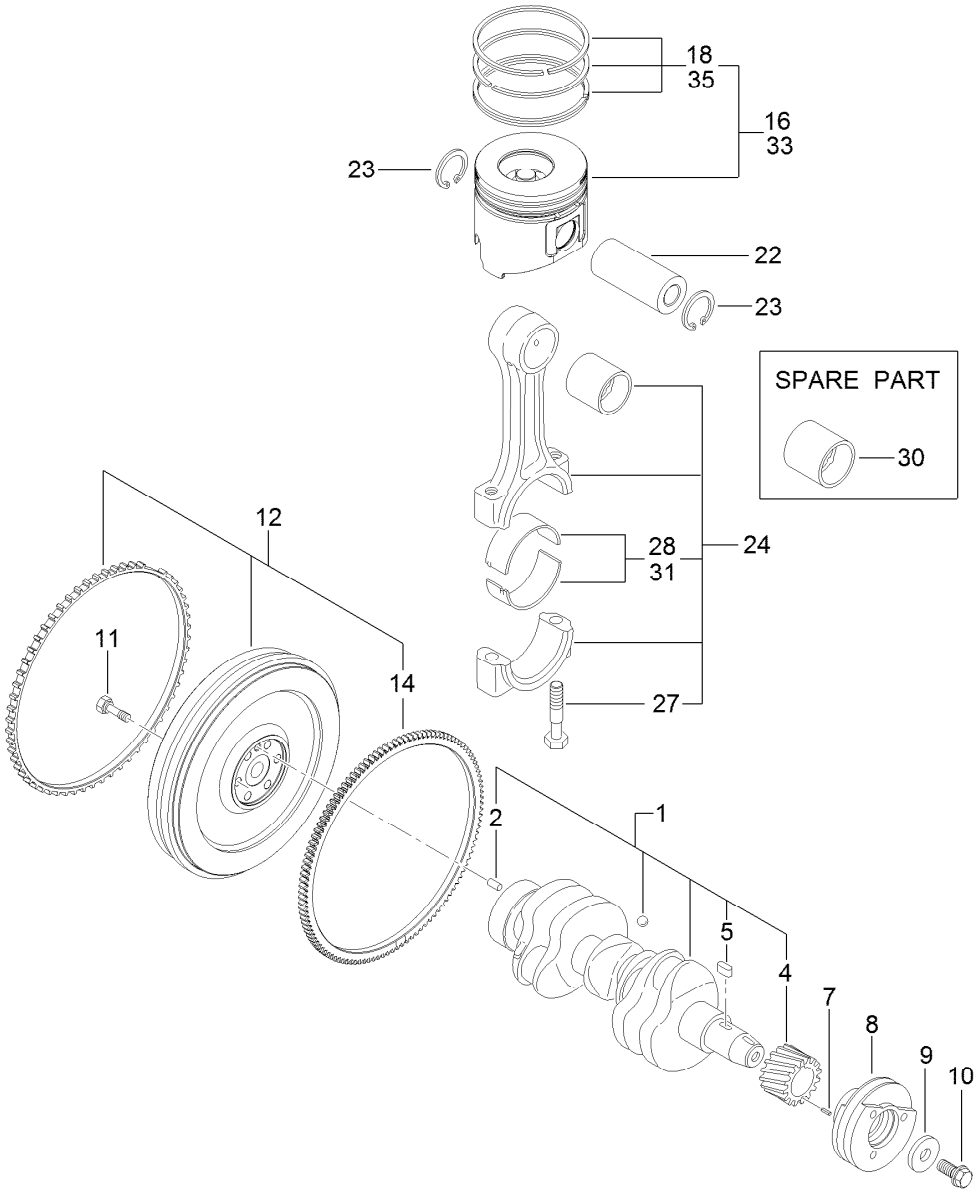


# Crankshaft and Piston Assembly

| Ref. | Part Number | Qty. | Description |
|---|---|---|---|
| 1 | 127-3800 | 1 | Crankshaft ASM |
| 2 | 125-6995 | 1 | Pin |
| 4 | 125-6937 | 1 | Gear |
| 5 | 125-7185 | 1 | Key |
| 7 | 125-7182 | 1 | Pin-Spring |
| 8 | 127-3801 | 1 | Pulley-V |
| 9 | 125-7109 | 1 | Washer |
| 10 | 125-6956 | 1 | Bolt |
| 11 | 125-6951 | 6 | Bolt |
| 12 | 127-3802 | 1 | Flywheel ASM |
| 14 | 125-6943 | 1 | Gear |

| Ref. | Part Number | Qty. | Description |
|---|---|---|---|
| 16 | 127-3097 | 3 | Piston ASM |
| 18 | 127-3098 | 3 | Piston Ring ASM |
| 22 | 125-7030 | 3 | Pin |
| 23 | 125-7180 | 6 | Ring |
| 24 | 125-7242 | 3 | Connecting Rod ASM |
| 27 | 125-6955 | 6 | Bolt |
| 28 | 125-7018 | 3 | Pin-Crank |
| 30 | 125-6997 | 3 | Pin-Piston |
| 31 | 125-7019 | 3 | Pin-Crank (.25) |
| 33 | 127-3099 | 3 | Piston ASM (0.25 O.S.) |
| 35 | 127-3100 | 3 | Piston Ring ASM (0.25 O.S.) |

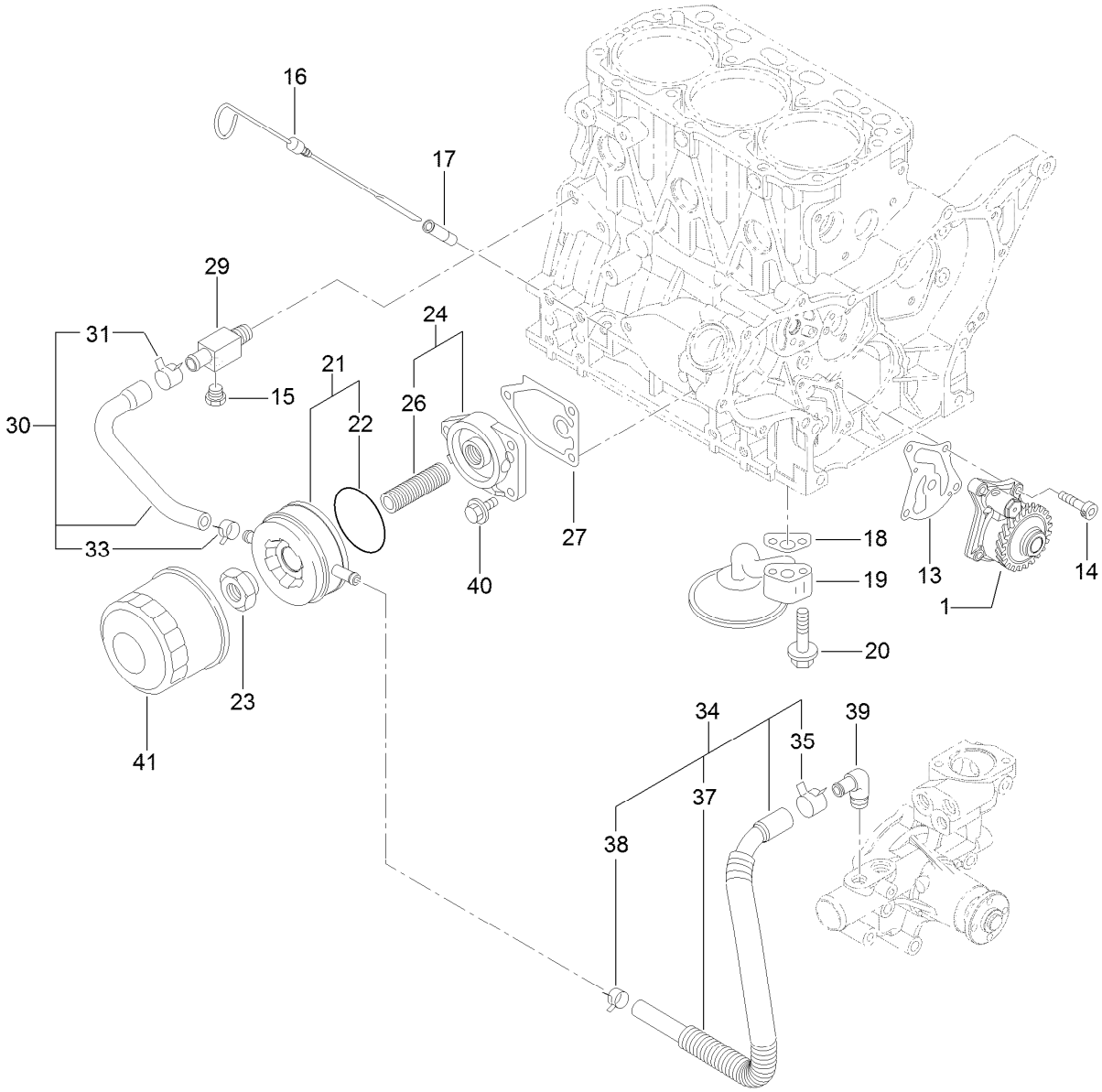


# Lubrication and Oil System Assembly

| Ref. | Part Number | Qty. | Description |
|---|---|---|---|
| 1 | 127-3101 | 1 | Oil Lube Pump ASM |
| 13 | 127-3004 | 1 | Gasket |
| 14 | 125-7232 | 4 | Bolt |
| 15 | 125-7171 | 1 | Plug-Drain |
| 16 | 125-6987 | 1 | Dipstick |
| 17 | 125-6954 | 1 | Guide-Dipstick |
| 18 | 125-7022 | 1 | Gasket |
| 19 | 127-3803 | 1 | Pipe ASM |
| 20 | 125-7217 | 2 | Bolt |
| 21 | 125-7074 | 1 | Cooler ASM |
| 22 | 125-7075 | 1 | O-Ring |
| 23 | 125-7041 | 1 | Nut-Cooler, Oil |
| 24 | 125-6989 | 1 | Bracket ASM |

| Ref. | Part Number | Qty. | Description |
|---|---|---|---|
| 26 | 125-7042 | 1 | Stud |
| 27 | 125-7024 | 1 | Gasket |
| 29 | 125-6990 | 1 | Joint |
| 30 | 125-7078 | 1 | Pipe ASM |
| 31 | 125-7162 | 1 | Clip |
| 33 | 125-7191 | 1 | Clamp-Hose |
| 34 | 127-3804 | 1 | Pipe ASM |
| 35 | 125-7162 | 1 | Clip |
| 37 | 127-3805 | 1 | Tube |
| 38 | 125-7191 | 1 | Clamp-Hose |
| 39 | 125-7001 | 1 | Elbow |
| 40 | 125-7595 | 3 | Bolt |
| 41 | 125-7025 | 1 | Filter-Engine, Oil |

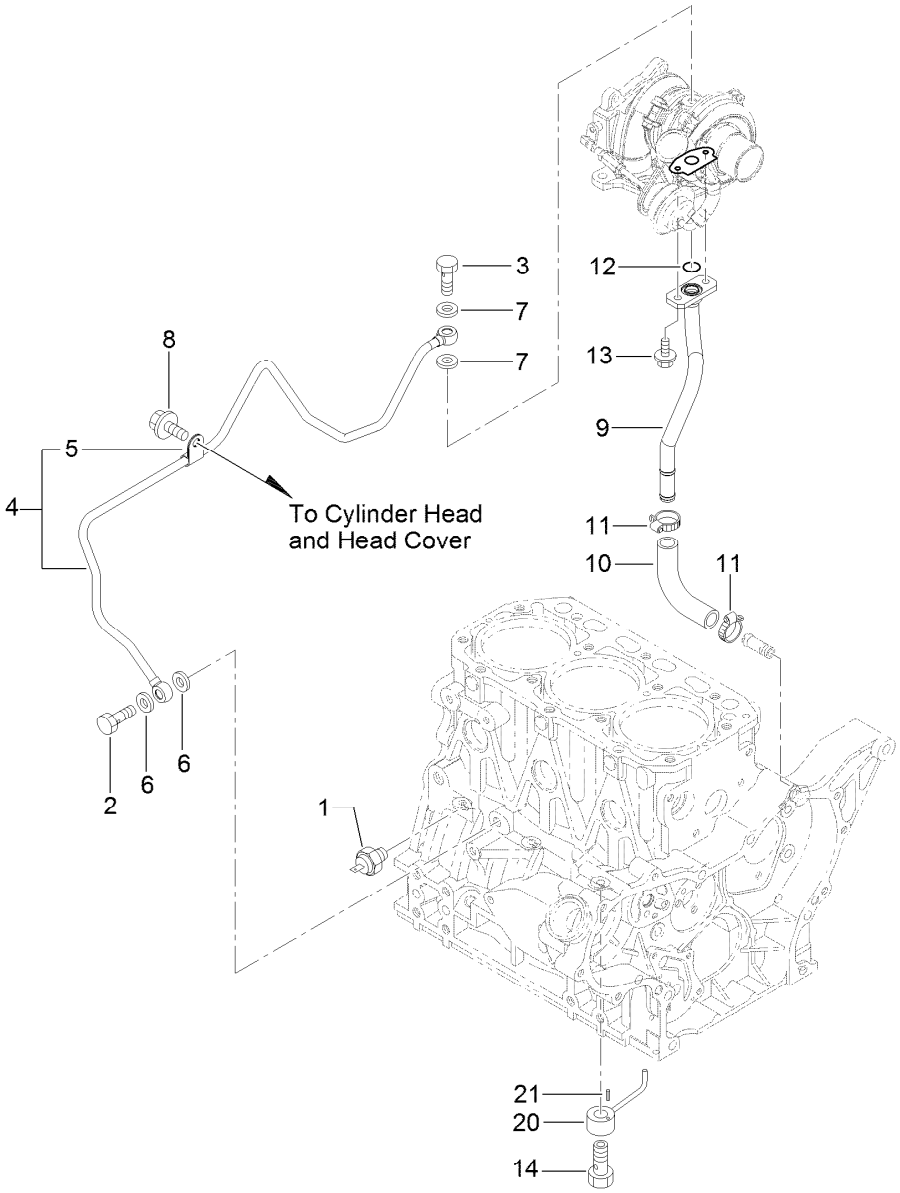


# Lubrication Oil Line Assembly

| Ref. | Part Number | Qty. | Description |
|---|---|---|---|
| 1 | 125-6918 | 1 | Switch-Oil |
| 2 | 125-6975 | 1 | Bolt-Joint, Pipe |
| 3 | 125-6952 | 1 | Bolt-Joint, Pipe |
| 4 | 127-3806 | 1 | Lube Oil Pipe ASM |
| 5 | 125-6976 | 1 | Retainer |
| 6 | 125-7175 | 2 | Washer-Seal |
| 7 | 125-7193 | 2 | Gasket |
| 8 | 93-0362 | 1 | Bolt |

| Ref. | Part Number | Qty. | Description |
|---|---|---|---|
| 9 | 127-3807 | 1 | Pipe-Return, Lube Oil |
| 10 | 127-3808 | 1 | Joint |
| 11 | 127-3169 | 2 | Clamp-Hose |
| 12 | 125-7198 | 1 | O-Ring |
| 13 | 125-7208 | 2 | Bolt |
| 14 | 125-7105 | 3 | Check Valve ASM |
| 20 | 125-7098 | 3 | Nozzle |
| 21 | 125-7182 | 3 | Pin-Spring |

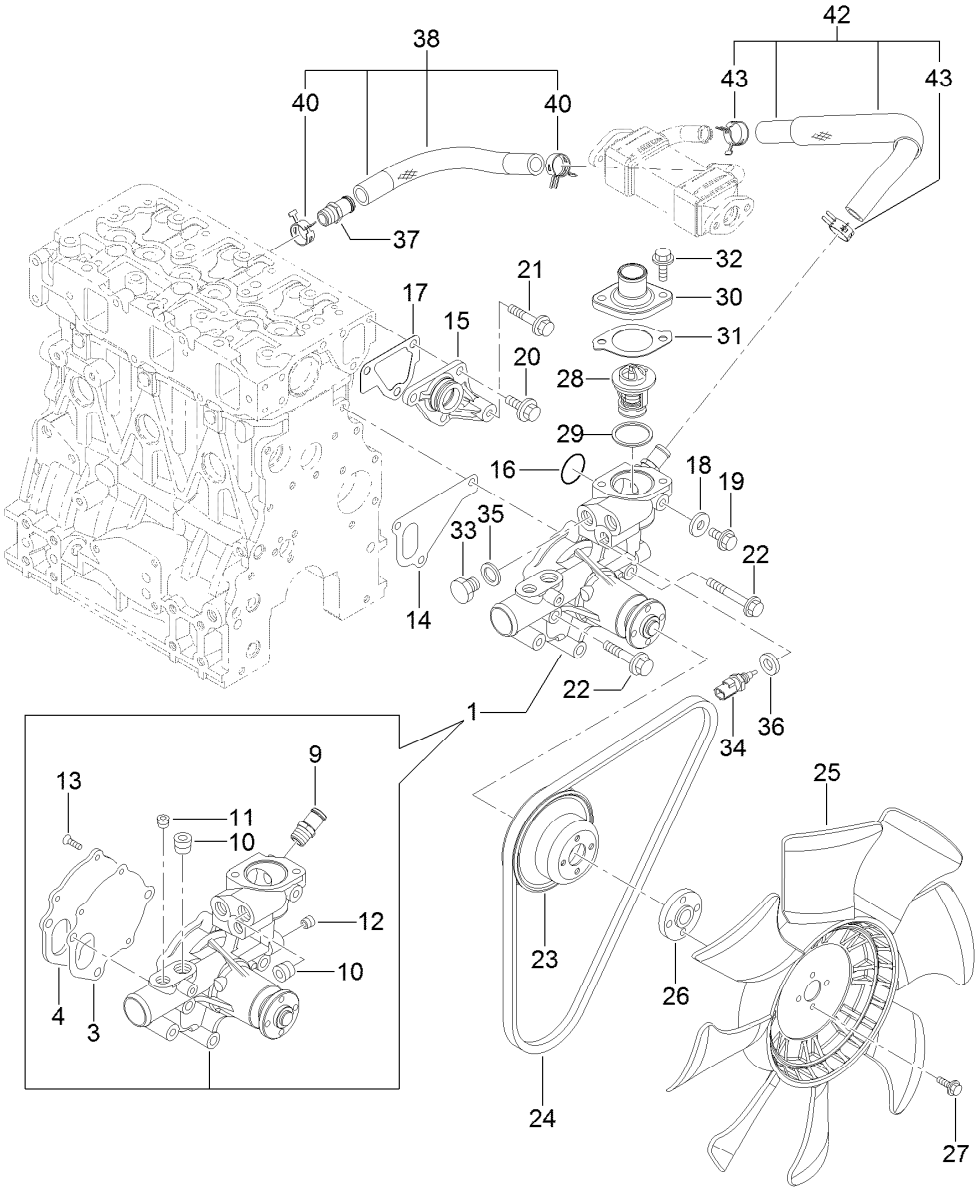


# Cooling Water System Assembly

| Ref. | Part Number | Qty. | Description |
|---|---|---|---|
| 1 | 127-3071 | 1 | Water Pump ASM |
| 3 | 125-6998 | 1 | Gasket |
| 4 | 125-6999 | 1 | Plate |
| 9 | 127-3017 | 1 | Joint |
| 10 | 125-7123 | 2 | Plug |
| 11 | 127-3175 | 1 | Plug |
| 12 | 125-7195 | 1 | Plug |
| 13 | 125-7234 | 3 | Screw |
| 14 | 125-7047 | 1 | Gasket |
| 15 | 125-6986 | 1 | Joint |
| 16 | 125-7048 | 1 | O-Ring |
| 17 | 125-6978 | 1 | Gasket |
| 18 | 125-7192 | 1 | Gasket |
| 19 | 93-0362 | 1 | Bolt |
| 20 | 125-7214 | 3 | Bolt |
| 21 | 125-7219 | 1 | Bolt |
| 22 | 125-7222 | 3 | Bolt |
| 23 | 125-7039 | 1 | V-Pulley |

| Ref. | Part Number | Qty. | Description |
|---|---|---|---|
| 24 | 127-2998 | 1 | V-Belt |
| 25 | 127-3809 | 1 | Fan |
| 26 | 127-3810 | 1 | Spacer |
| 27 | 125-7209 | 4 | Bolt |
| 28 | 125-7029 | 1 | Thermostat |
| 29 | 125-7026 | 1 | Gasket |
| 30 | 125-7034 | 1 | Cover |
| 31 | 125-7110 | 1 | Gasket |
| 32 | 125-7594 | 2 | Bolt |
| 33 | 125-6953 | 1 | Plug |
| 34 | 125-7124 | 1 | Sensor-Thermostat, CW |
| 35 | 125-6979 | 1 | Gasket |
| 36 | 125-7176 | 1 | Washer-Seal |
| 37 | 127-3017 | 1 | Joint |
| 38 | 127-3072 | 1 | Water In Pipe ASM |
| 40 | 127-3020 | 2 | Clip-Hose |
| 42 | 127-3811 | 1 | CW Pipe ASM |
| 43 | 127-3020 | 2 | Clip-Hose |

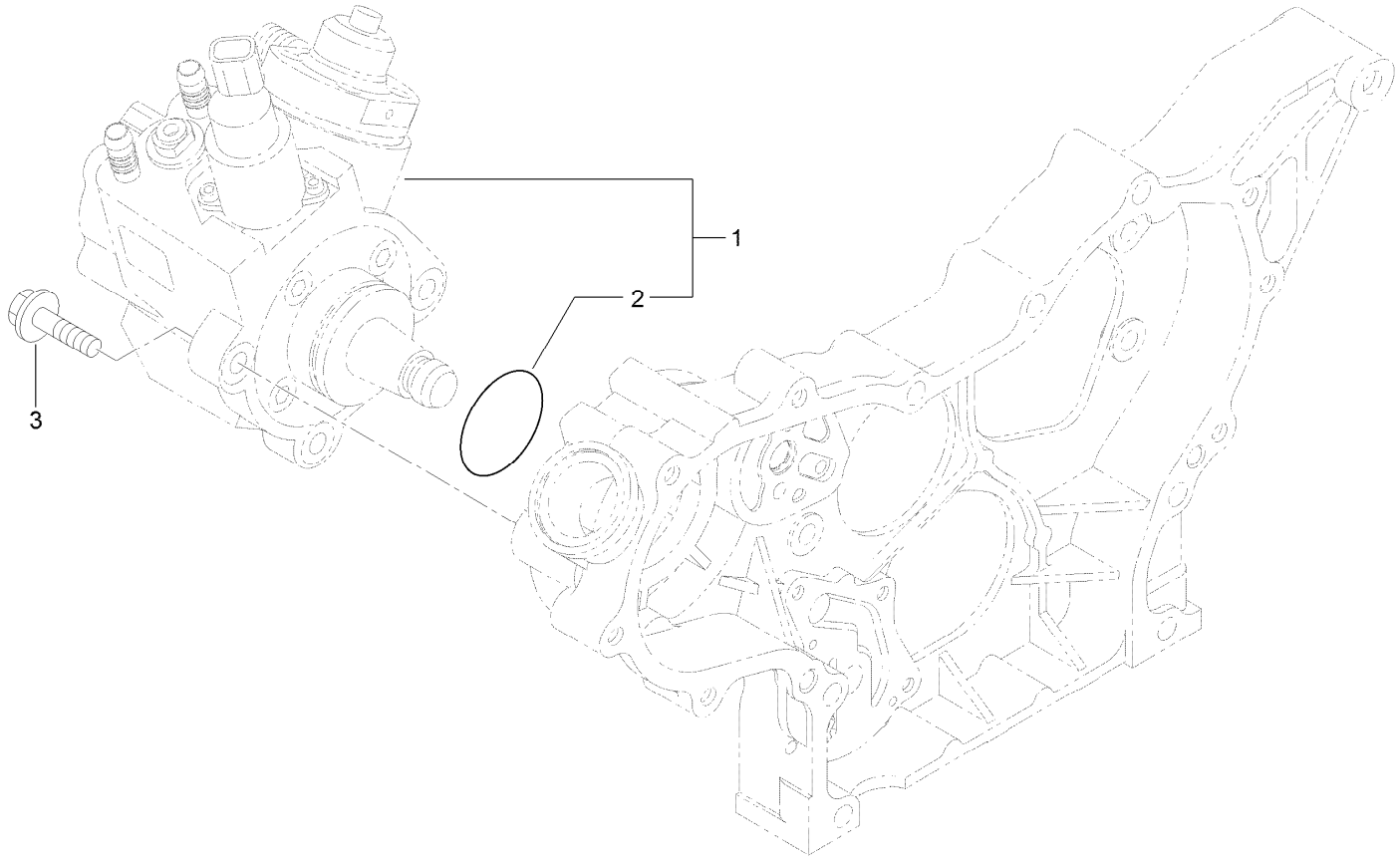


# Fuel System Assembly

| *Ref.* | *Part Number* | *Qty.* | *Description* |
|---|---|---|---|
| 1 | 127-3073 | 1 | Fuel Pump ASM |
| 2 | 127-3074 | 1 | O-Ring |
| 3 | 125-7216 | 3 | Bolt |

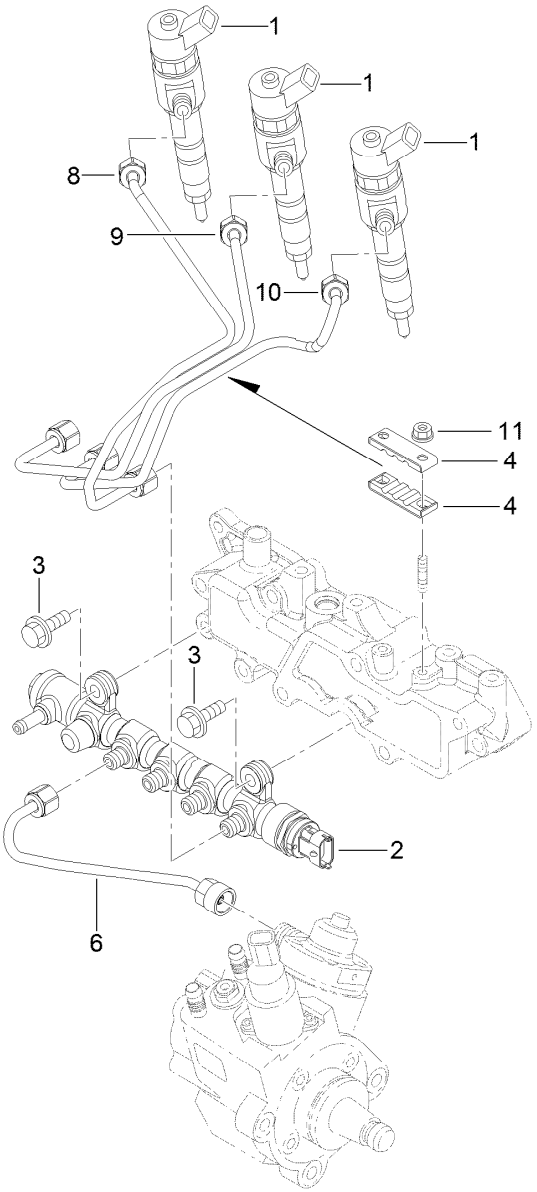


# Fuel Injection Valve Assembly

| *Ref.* | *Part Number* | *Qty.* | *Description* |
|---|---|---|---|
| 1 | 127-3104 | 3 | Injector ASM |
| 2 | 127-3812 | 1 | Rail ASM |
| 3 | 125-7215 | 2 | Bolt |
| 4 | 127-3813 | 2 | Retainer |
| 6 | 127-3082 | 1 | Rail In Pipe ASM |
| 8 | 127-3814 | 1 | Injection Pipe ASM |
| 9 | 127-3083 | 1 | Injection Pipe ASM |
| 10 | 127-3084 | 1 | Injection Pipe ASM |
| 11 | 125-7231 | 2 | Nut |

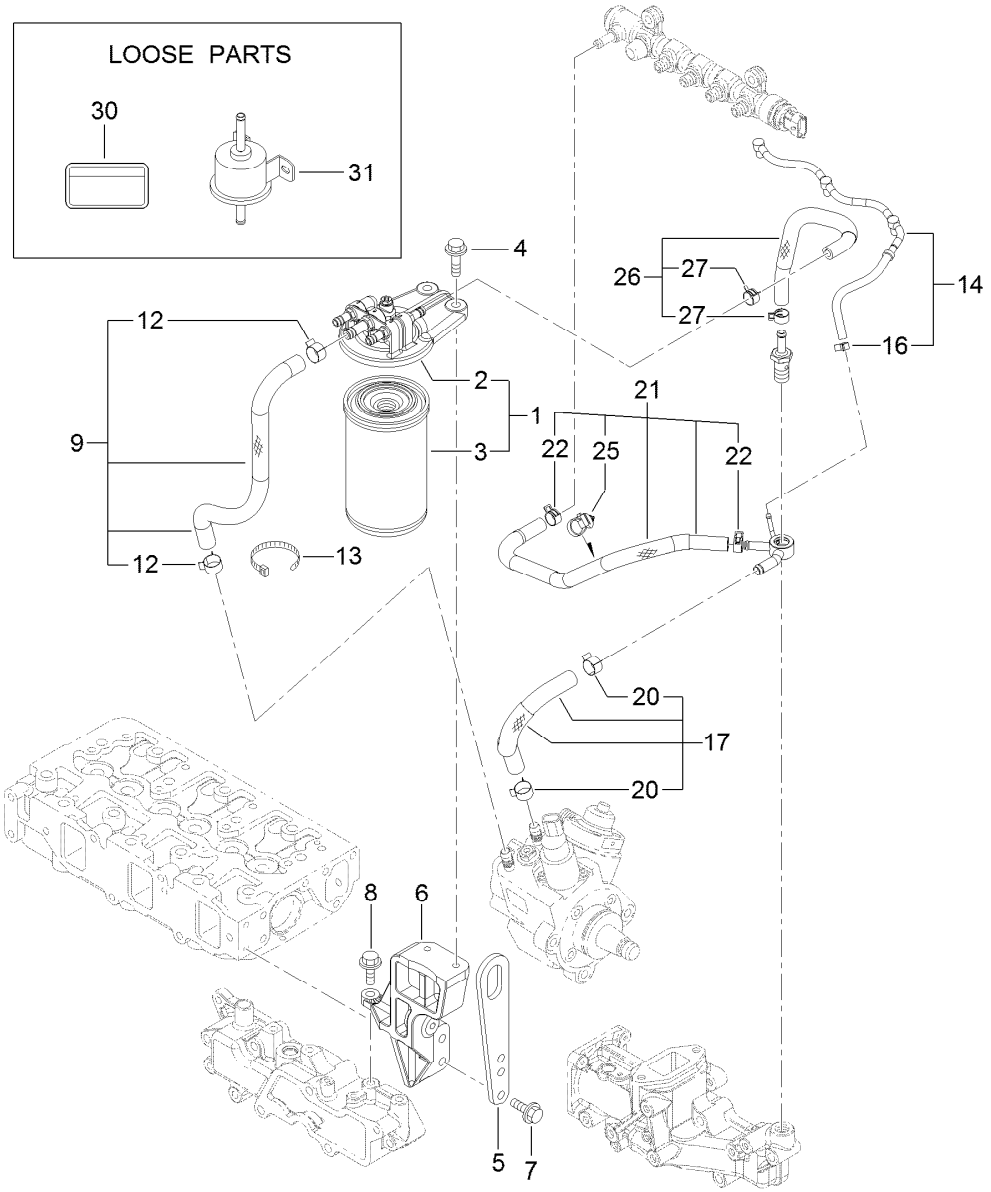


# Fuel Line Assembly

| Ref. | Part Number | Qty. | Description |
|---|---|---|---|
| 1 | 127-3075 | 1 | Fuel/Oil Filter ASM |
| 2 | 127-3076 | 1 | Fuel/Oil Filter Bracket ASM |
| 3 | 125-8752 | 1 | Filter-Fuel/Oil |
| 4 | 125-7216 | 2 | Bolt |
| 5 | 125-7111 | 1 | Lifter |
| 6 | 127-3815 | 1 | Filter Bracket ASM |
| 7 | 125-7215 | 2 | Bolt |
| 8 | 125-7215 | 1 | Bolt |
| 9 | 127-3077 | 1 | Fuel Pipe ASM |
| 12 | 125-7191 | 2 | Clamp-Hose |
| 13 | 127-2981 | 1 | Band |

| Ref. | Part Number | Qty. | Description |
|---|---|---|---|
| 14 | 127-3816 | 1 | Fuel/Oil Return Pipe ASM |
| 16 | 127-3172 | 1 | Clamp-Hose |
| 17 | 127-3078 | 1 | Fuel Pipe ASM |
| 20 | 125-7191 | 2 | Clamp-Hose |
| 21 | 127-3817 | 1 | Fuel Pipe ASM |
| 22 | 127-2950 | 2 | Clip-Hose |
| 25 | 127-3087 | 1 | Band-Clip |
| 26 | 127-3079 | 1 | Fuel Pipe ASM |
| 27 | 127-2950 | 2 | Clip-Hose |
| 30 | 125-6900 | 1 | Label-Caution, Fuel Oil |
| 31 | 127-3008 | 1 | Fuel Feed Pump ASM |

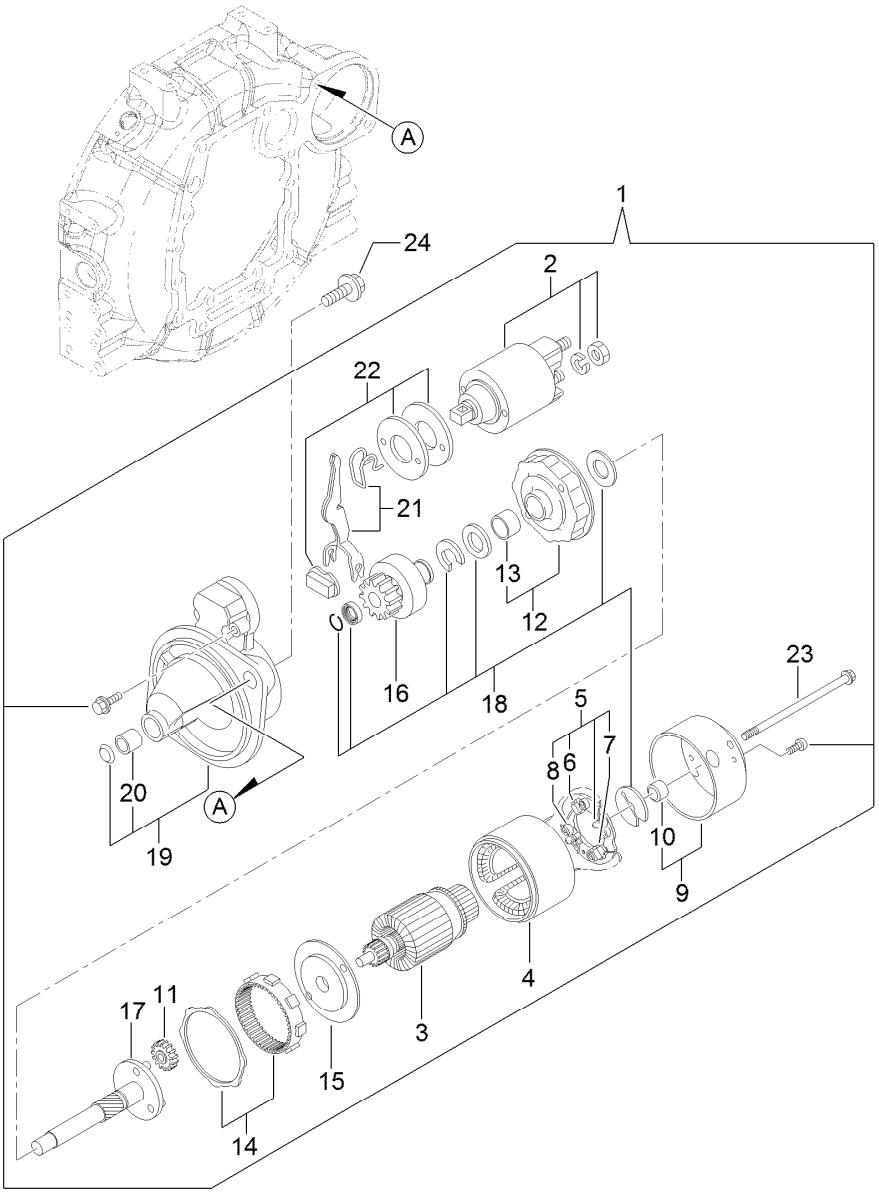


# Starting Motor Assembly

| Ref. | Part Number | Qty. | Description |
|---|---|---|---|
| 1 | 127-3818 | 1 | Starter ASM |
| 2 | 127-3819 | 1 | Switch ASM |
| 3 | 127-3820 | 1 | Armature ASM |
| 4 | 127-3821 | 1 | Yoke ASM |
| 5 | 127-3822 | 1 | Brush Holder ASM |
| 6 | 127-3823 | 2 | Brush |
| 7 | 127-3824 | 1 | Brush Set |
| 8 | 127-3825 | 4 | Spring |
| 9 | 127-3826 | 1 | Cover ASM |
| 10 | 127-3827 | 1 | Metal |
| 11 | 127-3828 | 3 | Gear |
| 12 | 127-3829 | 1 | Bracket |
| 13 | 127-3830 | 1 | Bracket |
| 14 | 127-3831 | 1 | Gear |
| 15 | 127-3832 | 1 | Bracket |
| 16 | 127-3833 | 1 | Pinion ASM |
| 17 | 127-3834 | 1 | Shaft |
| 18 | 127-3835 | 1 | Washer Set |
| 19 | 127-3836 | 1 | Case ASM |
| 20 | 127-3837 | 1 | Metal-Starter |
| 21 | 127-3838 | 1 | Lever Set |
| 22 | 127-3839 | 1 | Dust Cover ASM |
| 23 | 127-3840 | 2 | Bolt-Through |
| 24 | 125-7225 | 2 | Bolt |

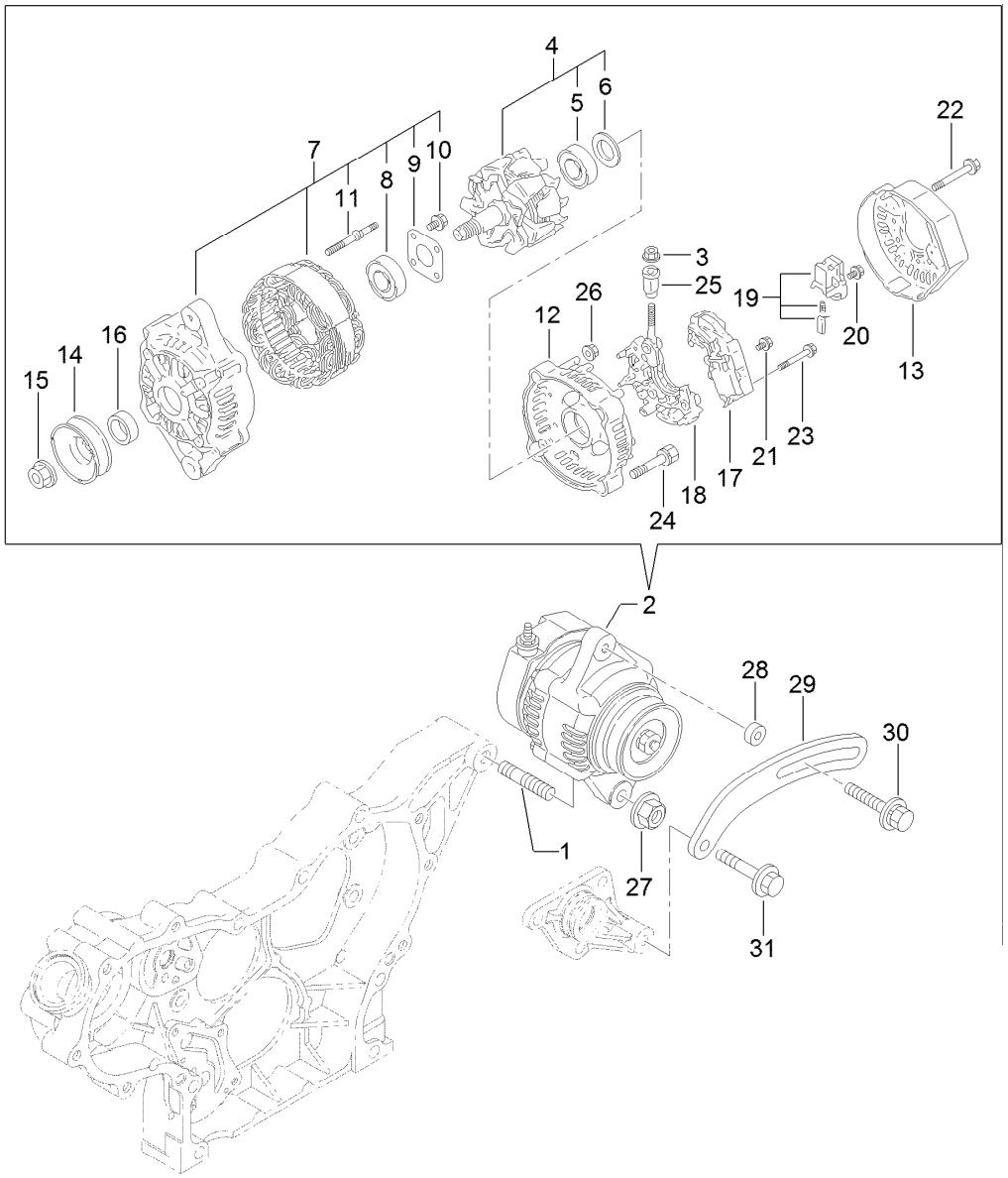


# Generator Assembly

| Ref. | Part Number | Qty. | Description |
|---|---|---|---|
| 1 | 127-3011 | 1 | Stud |
| 2 | 127-3841 | 1 | Generator |
| 3 | 127-3842 | 1 | Nut |
| 4 | 127-3843 | 1 | Rotor ASM |
| 5 | 127-2983 | 1 | Bearing-Ball |
| 6 | 127-2962 | 1 | Cover |
| 7 | 127-3844 | 1 | Frame ASM |
| 8 | 127-2958 | 1 | Bearing-Ball |
| 9 | 127-2959 | 1 | Plate-Retainer |
| 10 | 127-2960 | 4 | Screw |
| 11 | 127-2961 | 2 | Stud |
| 12 | 127-3845 | 1 | Frame |
| 13 | 127-3846 | 1 | Cover |
| 14 | 127-2954 | 1 | Pulley |
| 15 | 127-2955 | 1 | Nut |
| 16 | 127-2957 | 1 | Collar |

| Ref. | Part Number | Qty. | Description |
|---|---|---|---|
| 17 | 127-3847 | 1 | Regulator ASM |
| 18 | 127-3848 | 1 | Holder |
| 19 | 127-2993 | 1 | Holder |
| 20 | 127-2965 | 6 | Screw |
| 21 | 127-2966 | 1 | Screw |
| 22 | 127-2967 | 3 | Bolt |
| 23 | 127-2968 | 2 | Screw |
| 24 | 127-2969 | 2 | Bolt |
| 25 | 127-2970 | 1 | Bushing-Insulation |
| 26 | 127-2971 | 2 | Nut |
| 27 | 125-7230 | 1 | Nut |
| 28 | 125-6947 | 1 | Spacer |
| 29 | 127-2977 | 1 | Adjuster |
| 30 | 125-7134 | 1 | Bolt |
| 31 | 125-7219 | 1 | Bolt |

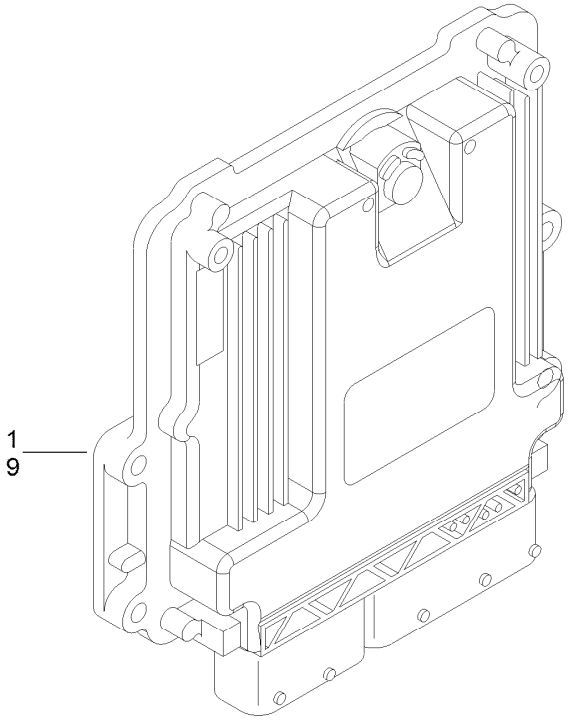


# Electronic Control Unit Assembly

| *Ref.* | *Part Number* | *Qty.* | *Description* |
|---|---|---|---|
| 1 | 127-3849 | 1 | E C U ASM |
| 9 | 127-3085 | 1 | E C U ASM |

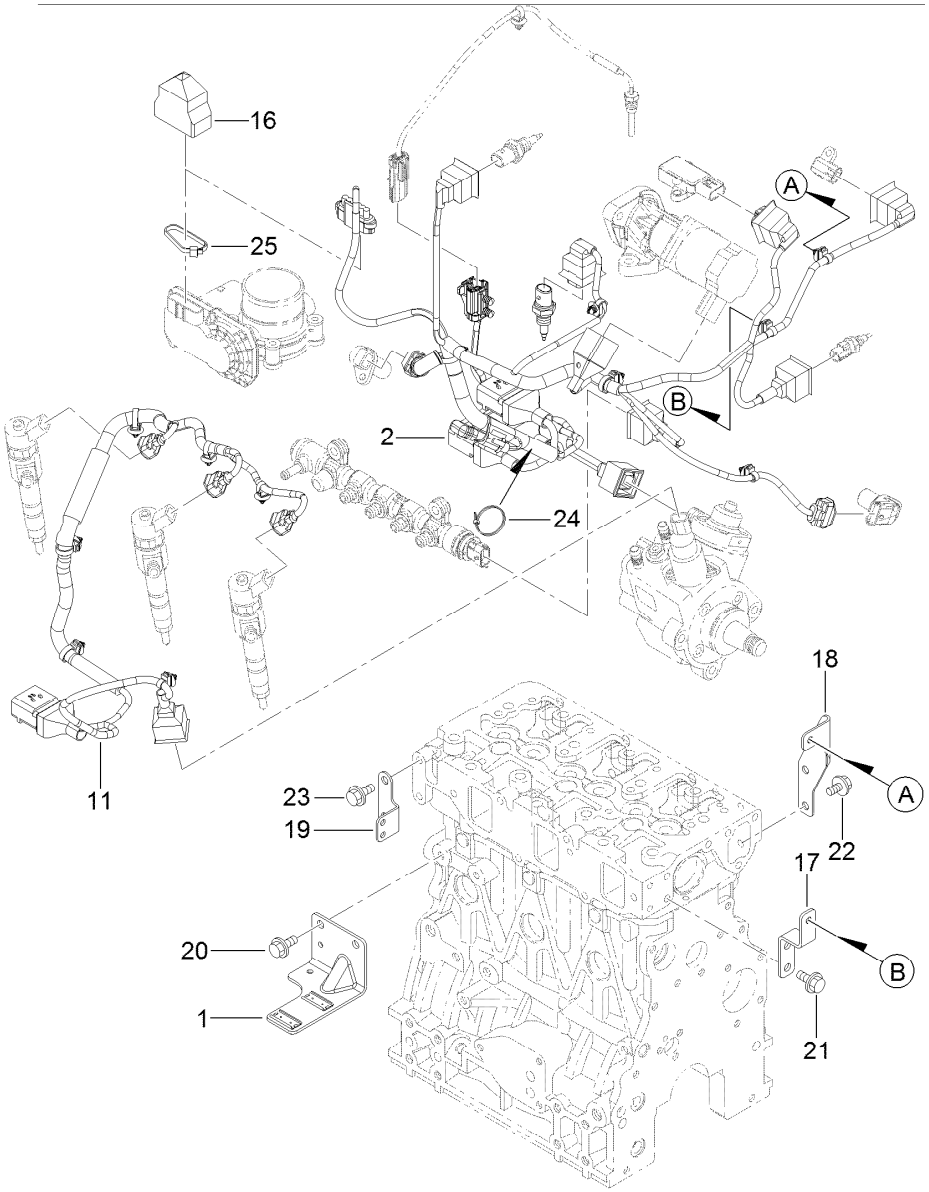


# Electric Parts Assembly

| Ref. | Part Number | Qty. | Description |
|---|---|---|---|
| 1 | 127-3086 | 1 | Bracket-Connector |
| 2 | 127-3850 | 1 | Harness B-Engine, E C O |
| 11 | 127-3851 | 1 | Harness |
| 16 | 127-3089 | 1 | Boot-Type, Cap |
| 17 | 127-3852 | 1 | Bracket-Harness |
| 18 | 127-3853 | 1 | Bracket-Harness |
| 19 | 127-3090 | 1 | Bracket-Harness |
| 20 | 93-0362 | 2 | Bolt |
| 21 | 93-0362 | 2 | Bolt |
| 22 | 93-0362 | 2 | Bolt |
| 23 | 93-0362 | 2 | Bolt |
| 24 | 127-3187 | 1 | Band |
| 25 | 127-3188 | 1 | Band |

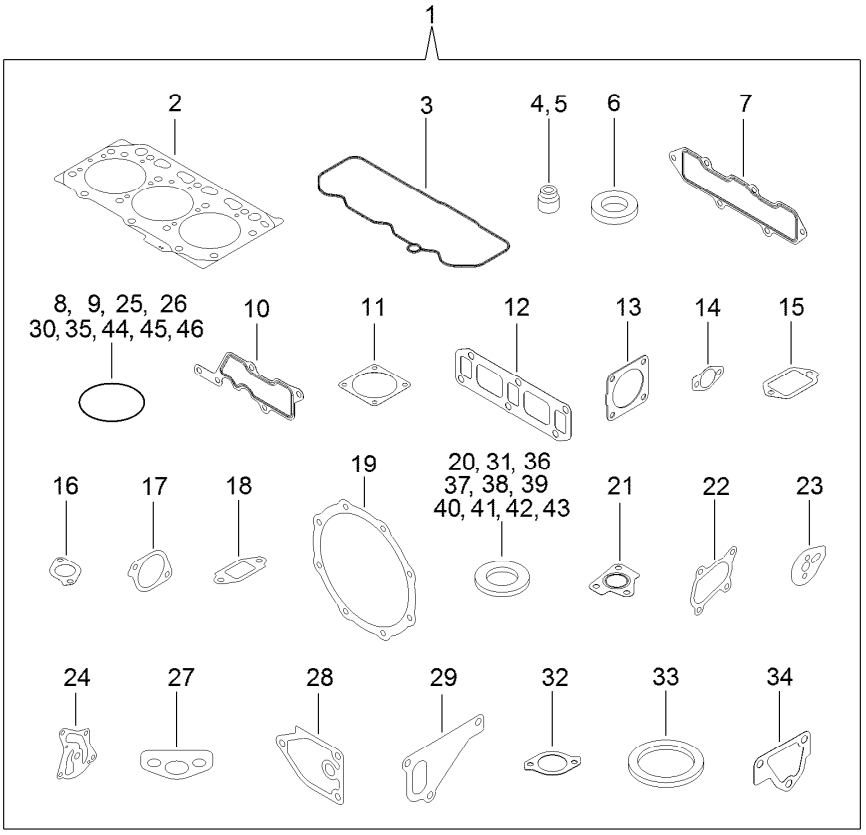


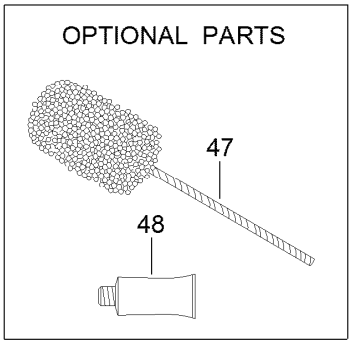


# Gasket Set

| Ref. | Part Number | Qty. | Description |
|---|---|---|---|
| 1 | 127-3854 | 1 | Gasket Kit |
| 2 | 127-3751 | 1 | Head Gasket ASM |
| 3 | 127-3762 | 1 | Gasket-Cover, Cylinder Head |
| 4 | 127-2986 | 3 | Seal-Stem, Valve |
| 5 | 127-3027 | 3 | Seal-Stem, Valve |
| 6 | 127-3021 | 3 | Gasket-Injector |
| 7 | 127-3769 | 1 | Gasket-Manifold, Intake |
| 8 | 127-3032 | 2 | O Ring-Sensor, Pressure |
| 9 | 127-3033 | 1 | O-Ring |
| 10 | 127-3034 | 1 | Gasket-Collector |
| 11 | 127-3037 | 2 | Gasket-Throttle |
| 12 | 127-3775 | 1 | Gasket-Manifold, Exhaust |
| 13 | 127-3019 | 1 | Gasket |
| 14 | 127-3043 | 2 | Gasket-Cooler, E G R |
| 15 | 127-3046 | 1 | Gasket-E G R |
| 16 | 127-3016 | 1 | Gasket |
| 17 | 127-3050 | 1 | Gasket-Intake Valve, E G R |
| 18 | 127-3051 | 1 | Gasket-Out Valve, E G R |
| 19 | 127-3787 | 2 | Gasket-D P F |
| 20 | 127-3056 | 4 | Gasket-Sensor |

| Ref. | Part Number | Qty. | Description |
|---|---|---|---|
| 21 | 127-3799 | 1 | Gasket-In, T C |
| 22 | 127-3779 | 1 | Gasket-Out, T C |
| 23 | 127-3069 | 1 | Gasket-Idle, Shaft B |
| 24 | 127-3004 | 1 | Gasket |
| 25 | 125-6909 | 2 | O-Ring |
| 26 | 127-2973 | 1 | O-Ring |
| 27 | 125-7022 | 1 | Gasket |
| 28 | 125-7024 | 1 | Gasket |
| 29 | 125-7047 | 1 | Gasket |
| 30 | 125-7048 | 1 | O-Ring |
| 31 | 125-6979 | 1 | Gasket |
| 32 | 125-7110 | 1 | Gasket |
| 33 | 125-7026 | 1 | Gasket |
| 34 | 125-6978 | 1 | Gasket |
| 35 | 127-3074 | 1 | O-Ring |
| 36 | 125-7174 | 1 | Washer-Seal |
| 37 | 125-7175 | 2 | Washer-Seal |
| 38 | 125-7176 | 1 | Washer-Seal |
| 39 | 127-3166 | 2 | Washer-Seal |
| 40 | 125-7177 | 1 | Washer-Seal |
| 41 | 125-7192 | 1 | Gasket |

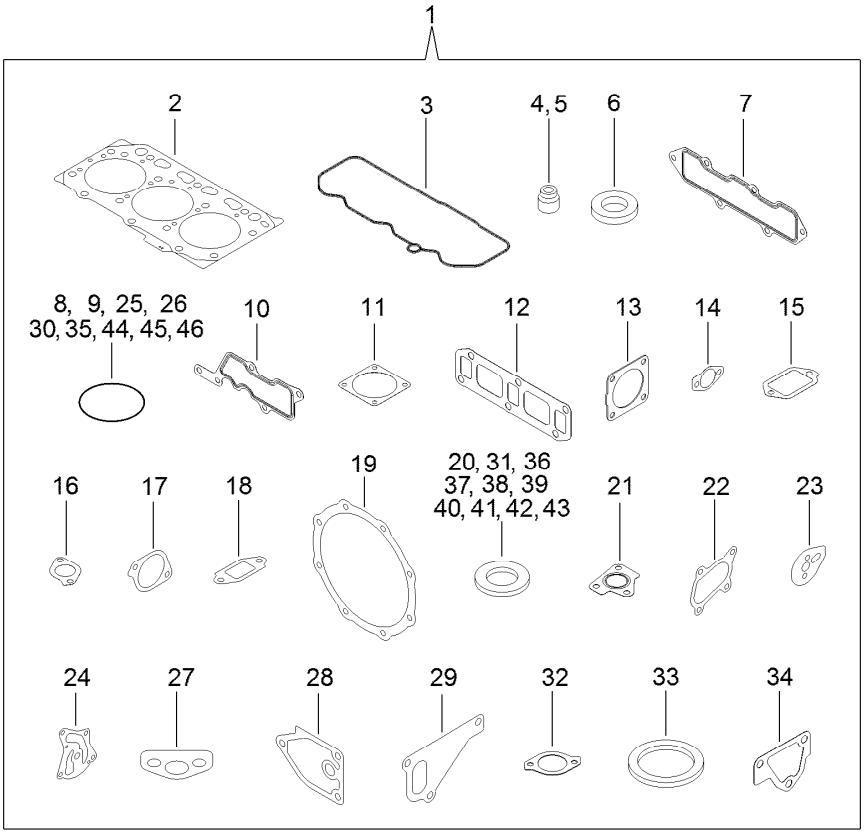


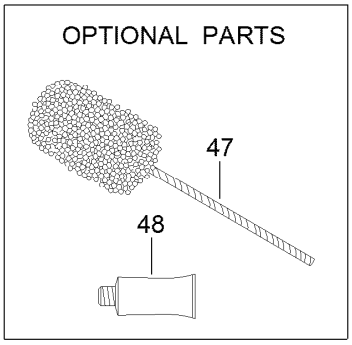


# Gasket Set (continued)

| Ref. | Part Number | Qty. | Description |
|---|---|---|---|
| 42 | 125-7193 | 2 | Gasket |
| 43 | 127-3174 | 2 | Gasket |
| 44 | 93-0418 | 3 | O-Ring |
| 45 | 125-7197 | 3 | O-Ring |
| 46 | 125-7198 | 1 | O-Ring |
| 47 | 125-7038 | 1 | Hone |
| 48 | 125-7248 | 1 | Gasket-Liquid |

# Attachments and Accessories

## For 30864 Groundsmaster 4300-D T4 Traction Unit

| Product Name | Model/Part |
|---|---|
| 22in Combo Blade | 108-7395-03 |
| 22in High Lift Blade | 114-0434-03 |
| 22in Atomic Blade | 114-0435-03 |
| Roller Scraper Kit | 117-0149 |
| Mulching Kit | 117-0185 |
| 22in Angle Sail Blade | 117-0209-03 |
| 22in Rotary Cutting Unit Sectional Roller ASM | 117-0297 |

**Notes:**

TORO®

Count on it.