Form No. 3411-116 Rev E

TORO®

Count on it.

Parts Catalog

Groundsmaster® 4300-D

Traction Unit

Model No. 30864—Serial No. 400000000 and Up

Register at www.Toro.com.
Original Instructions (EN)

CE

3411-116 E

Ordering Replacement Parts

To order replacement parts, please supply the part number, the quantity, and the description of each part desired.

Understanding Reference Numbers

Each identified part in an illustration has a reference number. The reference number for a part also appears in the parts list, along with other information about the part.

This catalog uses two special reference number formats, one to indicate parts in a service assembly and another to indicate the quantity of a given part in an illustration.

Service Assembly Reference Numbers

Parts in service assemblies have reference numbers in the form a:b. The a represents the reference number of the entire service assembly and the b represents a sequential number unique to each part within the service assembly.

For example, a wheel assembly might be identified by reference number 6, the tire by 6:1, the valve by 6:2, and the wheel by 6:3. When you order the assembly identified by reference number 6, you receive all parts identified by reference numbers 6:1,6:2, and 6:3. However, you may also order any part individually. Reference numbers of this type appear in illustration and in parts lists.

Reference Numbers Indicating Quantity

In an illustration, if a reference number indicates more than one part, the reference number has the form nX y. The n represents the quantity of the part, the X is the multiplication symbol, and the y represents the reference number.

For example, in an illustration, the reference number 2X 37 means that two of the parts identified by reference number 37 are indicated.

Contents

Frame Assembly . . . 5
Operator Platform Assembly . . . 6
Pedal Assembly . . . 7
Steering Assembly . . . 9
Steering Tilt Column Assembly No. 106-3622 . . . 10
Steering Valve Assembly No. 106-3621 . . . 11
Control Arm Assembly . . . 12
Joystick Bracket Assembly No. 120-5280 . . . 14
Front Axle Assembly . . . 15
LH Brake Assembly No. 120-6261 . . . 16
RH Brake Assembly No. 120-6260 . . . 17
Rear Axle Assembly . . . 18
Tie Rod Assembly No. 110-5334-03 . . . 19
No. 1, 4 and 5 Lift Arm and Deck Assembly . . . 20
No. 2 and 3 Lift Arm and Deck Assembly . . . 22
Roller and Carrier Frame Assembly . . . 24
Roller Assembly No. 108-7387 . . . 25
Height-of-Cut Assembly . . . 26
Spindle, Blade and Chamber Assembly . . . 27
Spindle Assembly No. 115-3435 . . . 28
Seat and Control Arm Wiring Harness Assembly . . . 29
Main Wiring Harness Assembly . . . 30
Electrical Assembly . . . 31
Gear Pump Mounting Assembly . . . 32
Gear Pump Assembly No. 121-5645 . . . 33
Seat Base Assembly . . . 34
Hood Assembly . . . 35
Radiator and Shroud Assembly . . . 36
Hydraulic Tank Assembly . . . 37
Fuel System Assembly . . . 38
Seat Mount Assembly . . . 39
Mechanical Seat Suspension Assembly No. 110-8851 . . . 40
Traction Pump Assembly . . . 41
Hydraulic Pump Assembly No. 119-6972 . . . 42
Traction Hydraulic Circuit . . . 44
Hydraulic Motor Assembly No. 133-2935 (CCW) . . . 45
Hydraulic Motor Assembly No. 133-2934 (CW) . . . 46
Rear Traction Hydraulic Circuit . . . 47
Hydraulic Motor Asembly No. 107-4544 . . . 48
Hydraulic Motor Assembly No. 110-0901 . . . 49
Four Wheel Drive Manifold Assembly No. 108-1825 . . . 50
Deck No. 1, 4 and 5 Hydraulic Circuit Assembly . . . 51
Gear Motor Assembly No. 108-4004 . . . 53
Deck Control Manifold Assembly No. 114-0359 . . . 54
Deck No. 2 and 3 Hydraulic Circuit Assembly . . . 55
Deck No. 1, 4 and 5 Lift Circuit Hydraulic Assembly . . . 57
Lift Control Manifold Assembly No. 117-0158 . . . 58
Hydraulic Cylinder Assembly No. 119-6989 . . . 59
Hydraulic Cylinder Assembly No. 119-6990 . . . 60
Hydraulic Cylinder Assembly No. 119-6991 . . . 61
Deck No. 2 and 3 Lift Circuit Hydraulic Assembly . . . 62
Hydraulic Cylinder Assembly No. 119-6988 . . . 63
Steering Hydraulic Assembly . . . 64
Hydraulic Cylinder Assembly No. 114-0403 . . . 66

© 2021—The Toro® Company

8111 Lyndale Avenue South
Bloomington, MN 55420

Contact us at www.Toro.com.
Printed in the USA.

All Rights Reserved

Contents (continued)

Engine, Driveshaft and Air Cleaner Assembly . . . 67
Air Cleaner Assembly No. 98-4517 . . . 69
Driveshaft Kit Assembly No. 133-2996 . . . 70
Cylinder Block Assembly . . . 71
Gear Housing Assembly . . . 72
Flywheel Housing and Oil Sump Assembly . . . 73
Cylinder Head and Cover Assembly . . . 74
Suction Manifold Assembly . . . 76
Exhaust Manifold Assembly . . . 77
Diesel Particulate Filter Assembly . . . 78
Camshaft and Driving Gear Assembly . . . 80
Turbine Assembly . . . 81
Crankshaft and Piston Assembly . . . 82
Lubrication and Oil System Assembly . . . 83
Lubrication Oil Line Assembly . . . 84
Cooling Water System Assembly . . . 85
Fuel System Assembly . . . 86
Fuel Injection Valve Assembly . . . 87
Fuel Line Assembly . . . 88
Generator Assembly . . . 89
Starting Motor Assembly . . . 90
Electric Parts Assembly . . . 92
Gasket Set . . . 93
Attachments and Accessories . . . 95

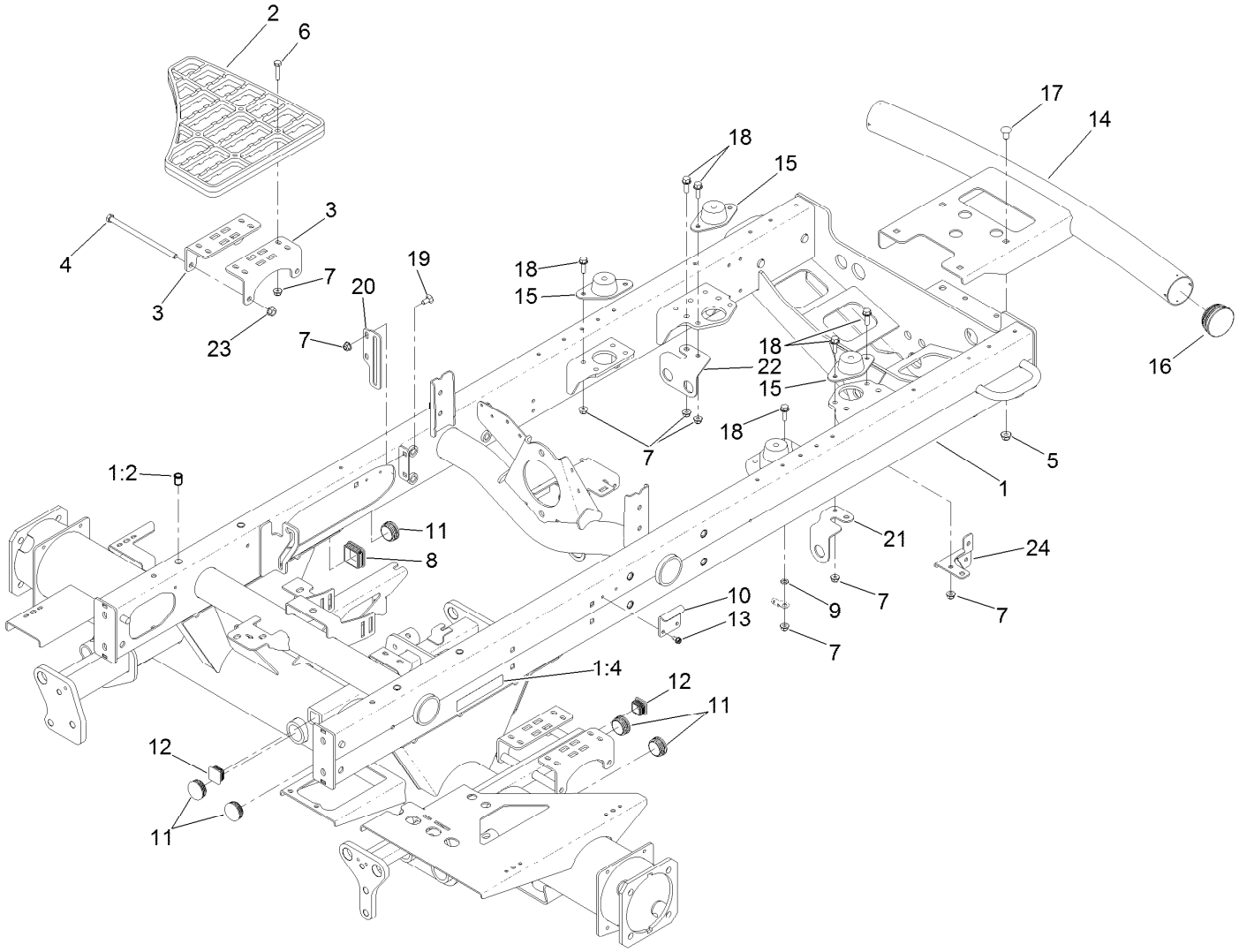

Frame Assembly

Ref.	Part Number	Qty.	Description
1	120-3809	1	Frame ASM
1:2	32148-7	4	Nut-Clinch
1:4	93-6689	2	Decal-No Riders
2	110-9041	2	Step-Aluminum
3	127-2697-01	4	Bracket-Step
4	323-36	4	Screw-HH
5	104-8301	4	Nut-HF, NI
6	322-17	8	Screw-HH
7	104-8300	20	Nut-HF, NI
8	95-9495	1	Cap
9	3255-8	1	Washer-Lock
10	110-8972	1	Hook-Latch
11	110-9012	5	Caplug

Ref.	Part Number	Qty.	Description
12	110-9013	2	Caplug
13	32104-17	2	Screw-HWH
14	110-8951-03	1	Bumper
15	120-6274	4	Mount-Engine
16	2410-42	2	Cap-End
17	3231-21	4	Screw-CARR
18	3234-29	10	Screw-HHF
19	3230-1	2	Bolt-CARR
20	108-7584-01	1	Plate-Guide, Rod
21	117-0155	1	Bracket-4Wd, LH
22	117-0154	1	Bracket-4Wd, RH
23	32128-21	4	Nut-HF Lock
24	133-2985-01	1	Bracket-Clamp, Tube

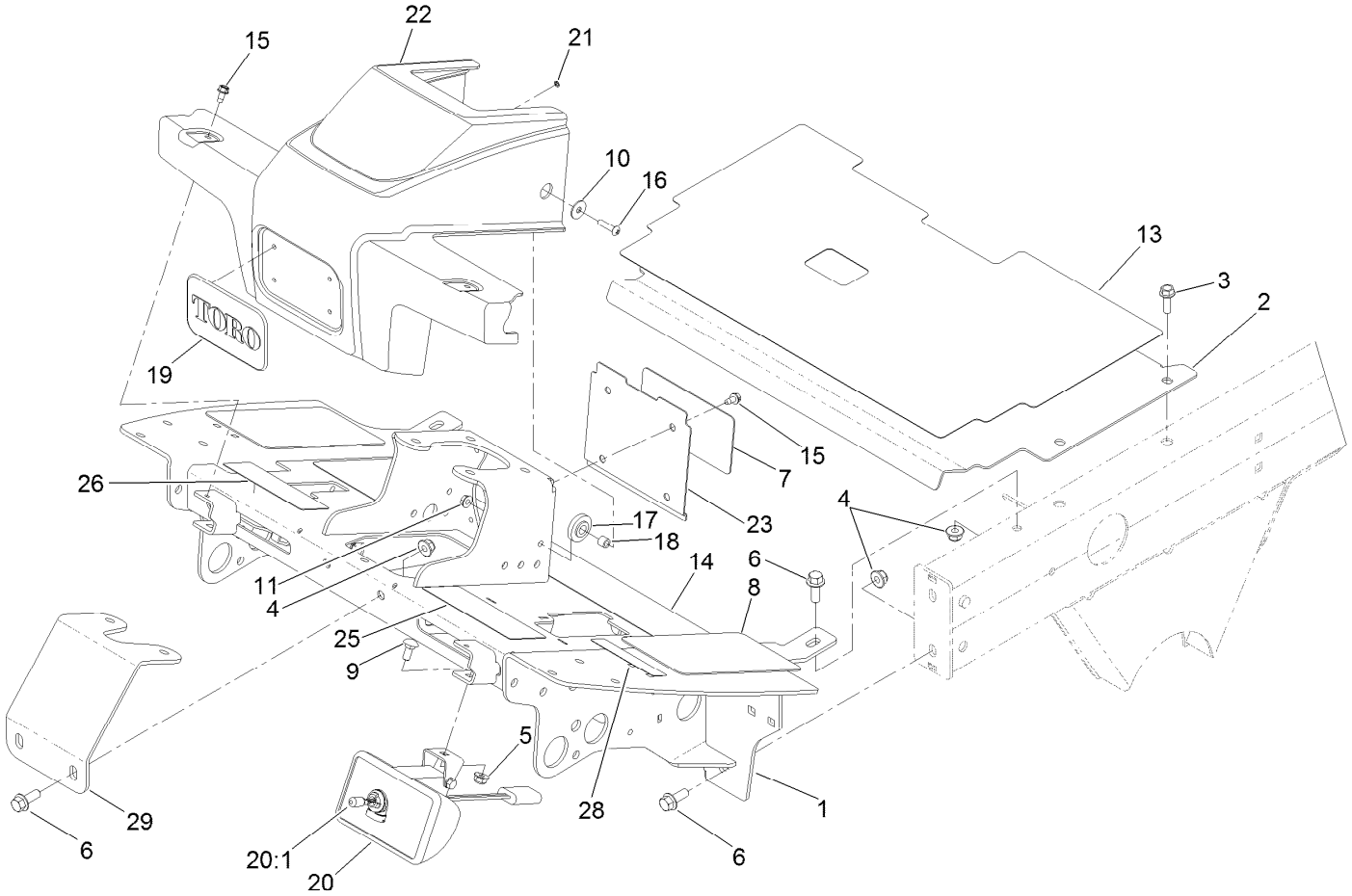

Items 20:2, 20:3 and 20:4
not used on this model

Operator Platform Assembly

Ref.	Part Number	Qty.	Description
1	127-2310-01	1	Platform ASM
2	115-8064-01	1	Plate-Floor
3	3234-17	4	Screw-HHF
4	104-8301	6	Nut-HF, NI
5	104-8300	2	Nut-HF, NI
6	3234-11	6	Screw-HHF
7	110-0986	1	Decal-Plate, Cover
8	125-2910	2	Tread-Floor, Side
9	3230-1	2	Bolt-CARR
10	87-6630	2	Washer-Plain
11	32128-33	2	Nut-HF
13	125-2911	1	Tread-Panel, Service
14	125-2909	1	Tread-Floorboard
15	32104-17	6	Screw-HWH
16	106-9518	2	Screw-PRH

Ref.	Part Number	Qty.	Description
17	240-11	2	Bushing-Flange
18	66-8010	2	Spacer
19	93-6028	1	Plate-Logo
20	94-9024	2	Lamp ASM
20:1	95-0909	1	Lamp-12 Volt
20:2	3230-28	1	Screw-CARR
20:3	3253-33	1	Washer-Lock
20:4	3217-6	1	Nut-Hex
21	3254-9	4	Washer-Lock, Internal
22	110-0944	1	Shroud-Platform
23	110-0947-03	1	Plate-Cover
25	133-2930	1	Decal-Danger
26	110-8921	1	Decal-Speed, Mow
28	117-2718	1	Decal-Arrester, Spark
29	110-8876-01	1	Brace-Column

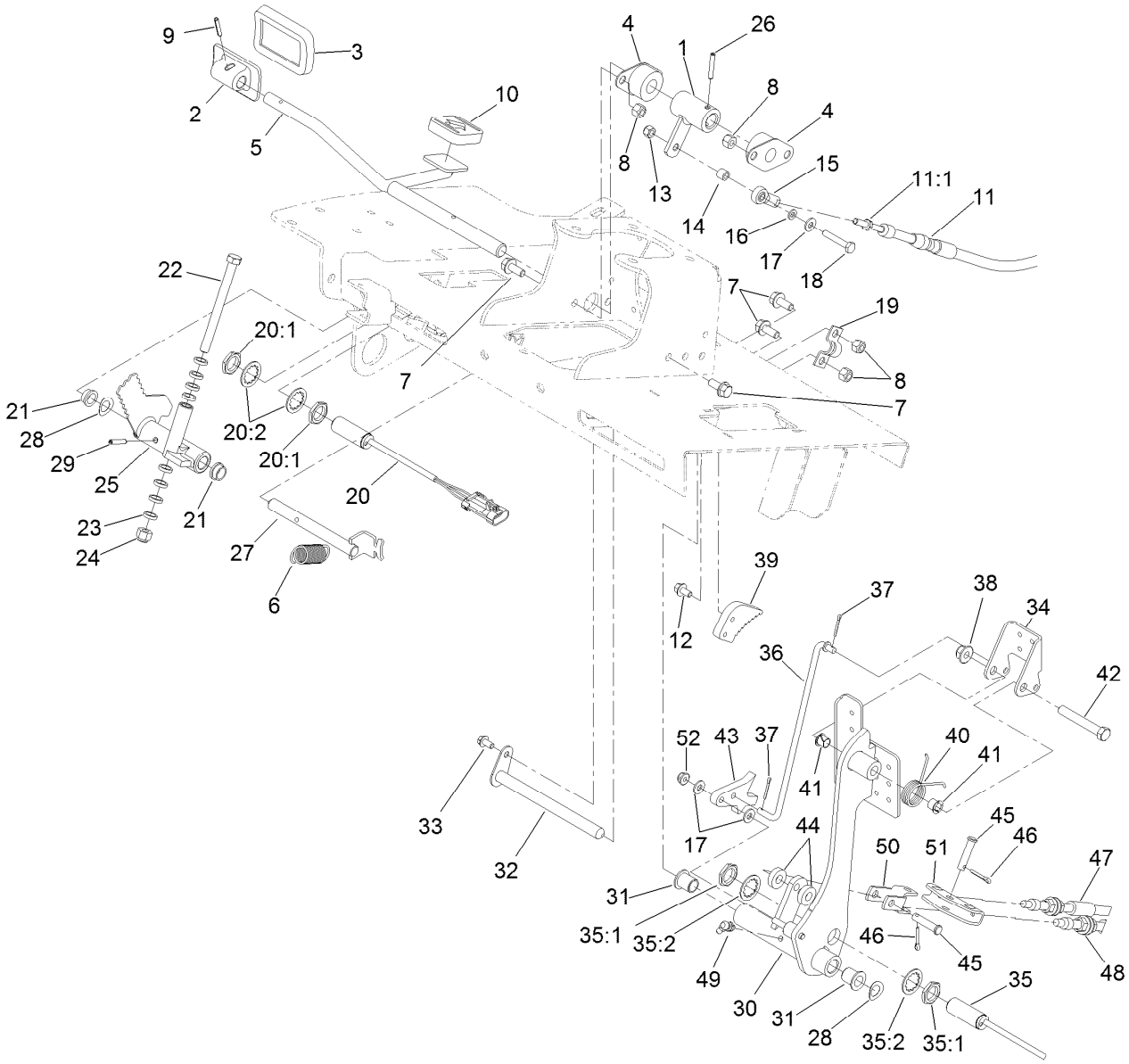

Pedal Assembly

Ref.	Part Number	Qty.	Description
1	117-5199	1	Hub-Pedal, Traction
2	117-9507	1	Pedal-Accelerator
3	74-9100	1	Pad-Pedal, Forward
4	256-236	2	Bearing-Mount, Flange
5	106-3840	1	Pedal-Traction
6	92-7305	1	Spring-Extension
7	3234-5	6	Screw-HHF
8	3296-29	6	Nut-Lock, NI
9	32121-45	1	Pin-Spring
10	74-9110	1	Pad-Pedal, Reverse
11	127-2721	1	Cable-Traction
11:1	3220-1	2	Nut-Jam
12	3234-13	2	Screw-HHF
13	3296-42	1	Nut-Lock, NI
14	66-8010	1	Spacer
15	2411-41	1	Rod End-Ball Joint
16	33093-00	1	Washer-Flat
17	3256-22	3	Washer-Flat
18	321-9	1	Screw-HH
19	93-2092	1	Clamp-Cable
20	115-0282	1	Proximity Sensor ASM

Ref.	Part Number	Qty.	Description
20:1	117-3207	2	Nut-Hex
20:2	117-3208	2	Washer-Lock, Internal Tooth
21	256-156	2	Bushing-Flange
22	323-17	1	Screw-HH
23	62-4420	8	Washer
24	3296-39	1	Nut-Lock, NI
25	117-8066	1	Mow-Stop
26	32121-6	1	Pin-Roll, Slotted
27	106-3731	1	Rod-Pivot
28	110-8982	2	Washer-Spring
29	32121-16	1	Pin-Spring
30	115-0120-03	1	Pedal-Brake
31	125-8775	2	Bushing-Flange
32	104-7179	1	Pivot-Pedal
33	32144-4	1	Screw-HWH
34	99-7963-03	1	Pedal-Park
35	115-5300	1	Proximity Switch ASM
35:1	117-3207	2	Nut-Hex
35:2	117-3208	2	Washer-Lock, Internal Tooth
36	115-0129	1	Rod-Pawl, Brake
37	3272-6	2	Pin-Cotter

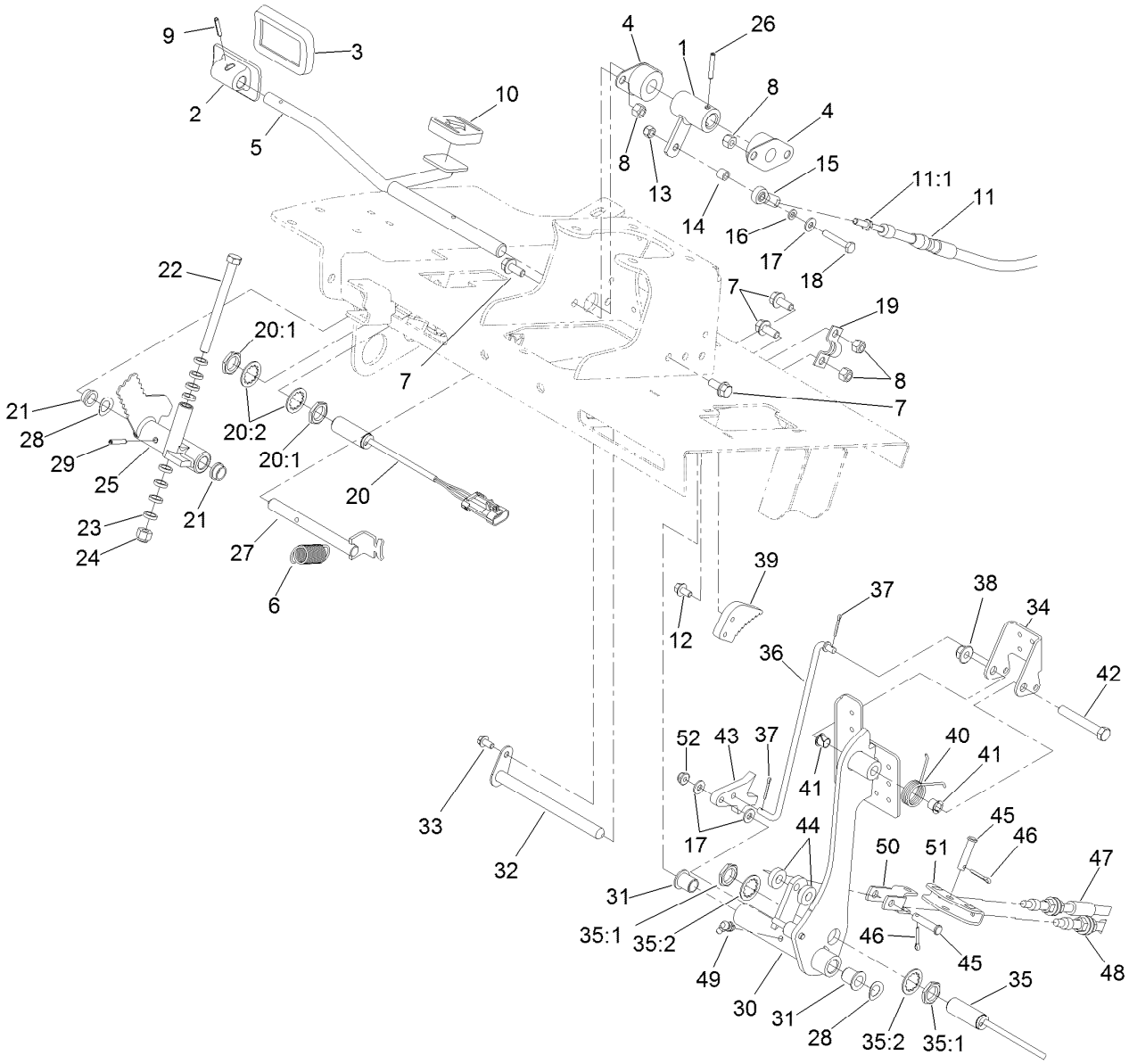

Pedal Assembly (continued)

Ref.	Part Number	Qty.	Description
38	104-8301	1	Nut-HF, NI
39	99-7214	1	Pawl-Brake
40	99-7140	1	Spring-Torsion
41	52-2891	2	Bushing-Flanged, Nylon
42	323-12	1	Screw-HH
43	117-0238	1	Detent
44	5-0652	2	Spacer
45	283-14	2	Pin-Clevis

Ref.	Part Number	Qty.	Description
46	3272-10	2	Pin-Cotter
47	117-0106	1	Cable-Brake, RH
48	117-0107	1	Cable-Brake, LH
49	302-60	1	Fitting-Grease
50	115-8060	1	Clevis-Double
51	115-8059	1	Yoke-Cable
52	104-7201	1	Nut-HF, NI

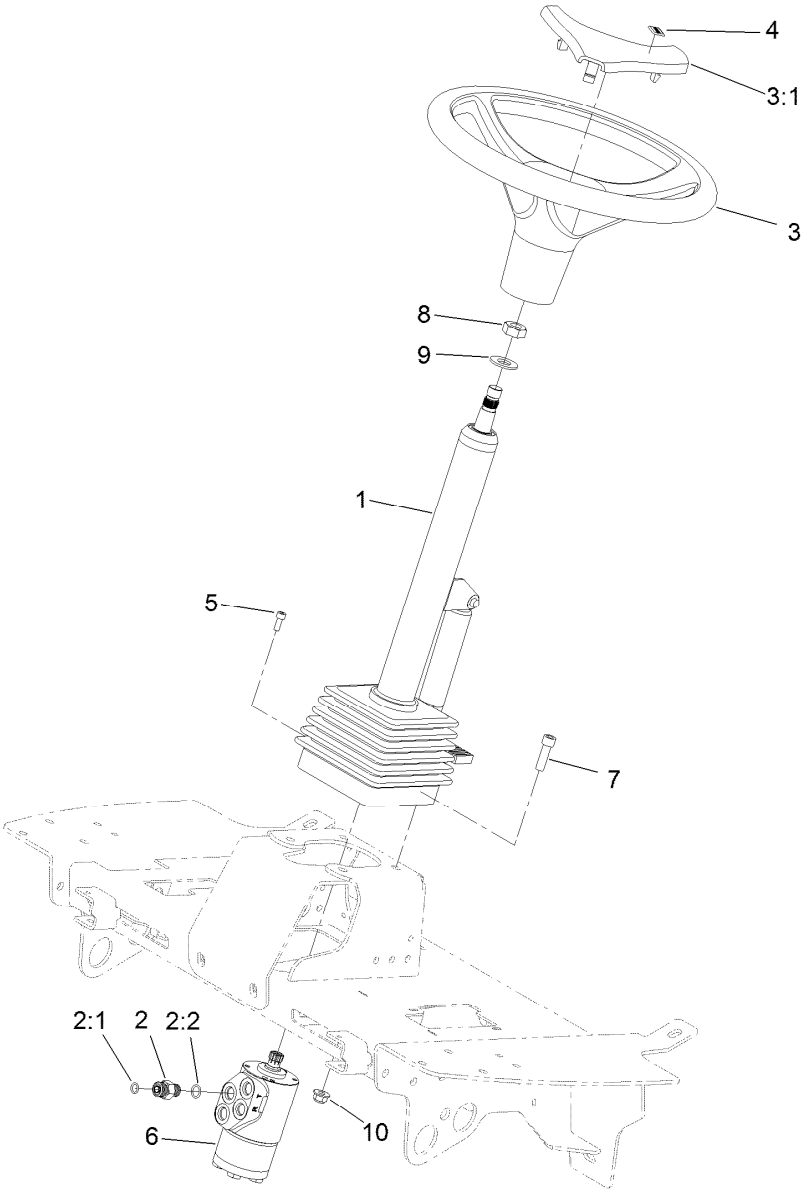

Steering Assembly

Ref.	Part Number	Qty.	Description
1	106-3622	1	Steering Tilt Column ASM
2	340-2	4	Fitting-Straight
2:1	237-22	1	O-Ring
2:2	237-42	1	O-Ring
3	98-1471	1	Wheel-Steering
3:1	98-1468	1	Cover-Wheel, Steering
4	98-1459	1	Decal
5	105-2409	4	Screw-HSH
6	106-3621	1	Steering Valve ASM
7	3274-1	4	Screw-HSH
8	3296-33	1	Nut-Lock, NI
9	3256-27	1	Washer-Flat
10	104-8301	4	Nut-HF, NI

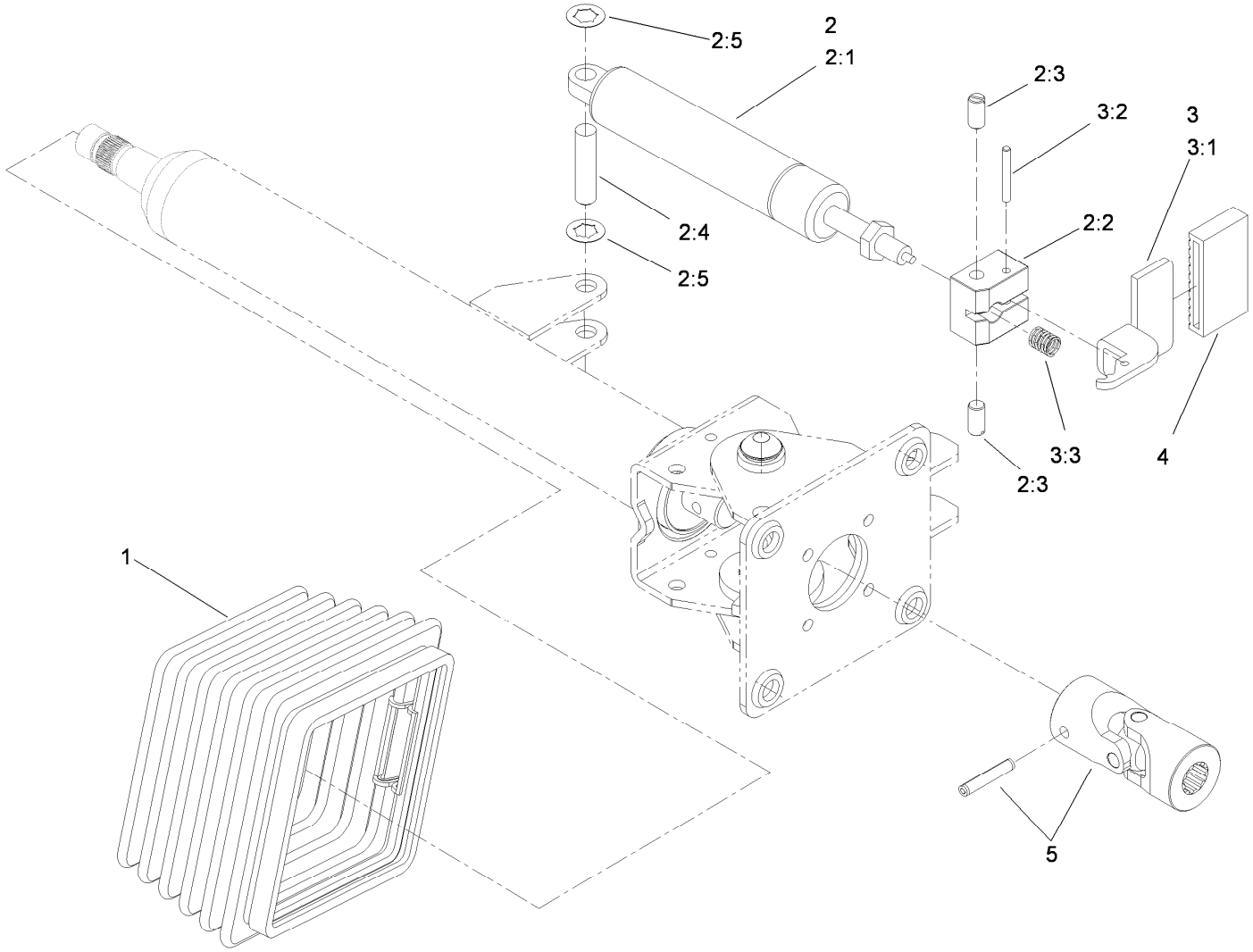

Steering Tilt Column Assembly No. 106-3622

Ref.	*Part Number*	*Qty.*	*Description*
1	110-6462	1	Bellows-Rubber
2	110-6463	1	Cylinder Service Kit
2:1		1	Cylinder-Gas ●
2:2		1	Block-Pedal ●
2:3		2	Bolt ●
2:4		1	Pin ●
2:5		2	Washer-Lock ●
3	110-6464	1	Pedal Service Kit
3:1		1	Pedal ●
3:2		1	Pin ●
3:3		1	Spring ●
4	110-6465	1	Cover-Pedal
5	120-6256	1	Universal Joint Kit

● Not serviced separately

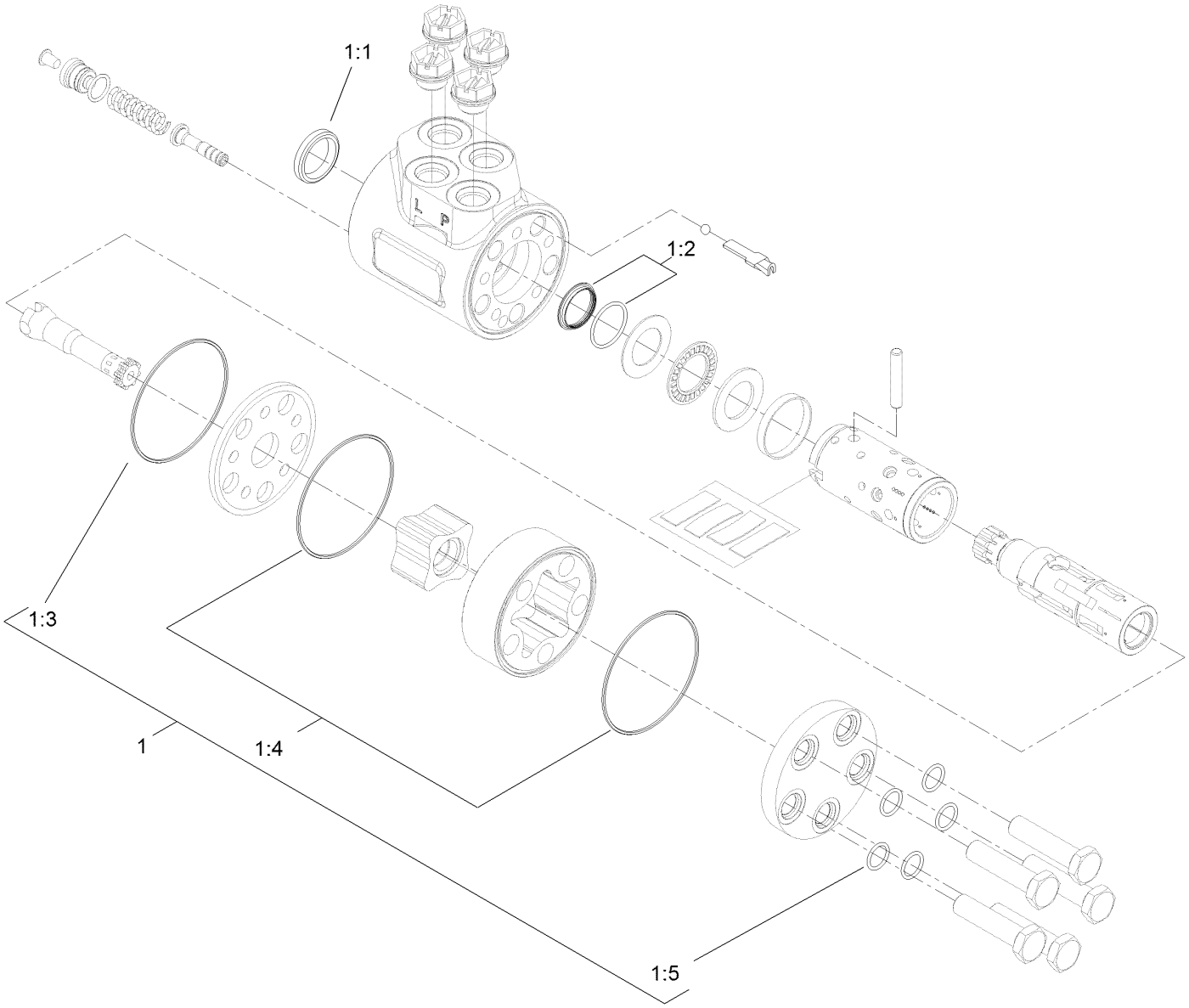

Steering Valve Assembly No. 106-3621

Ref.	*Part Number*	*Qty.*	*Description*
1	106-6716	1	Seal Kit
1:1		1	Ring-Seal, Dust ●
1:2		1	Seal-Shaft ●
1:3		1	O-Ring ●
1:4		2	O-Ring ●
1:5		5	O-Ring ●

● Not serviced separately

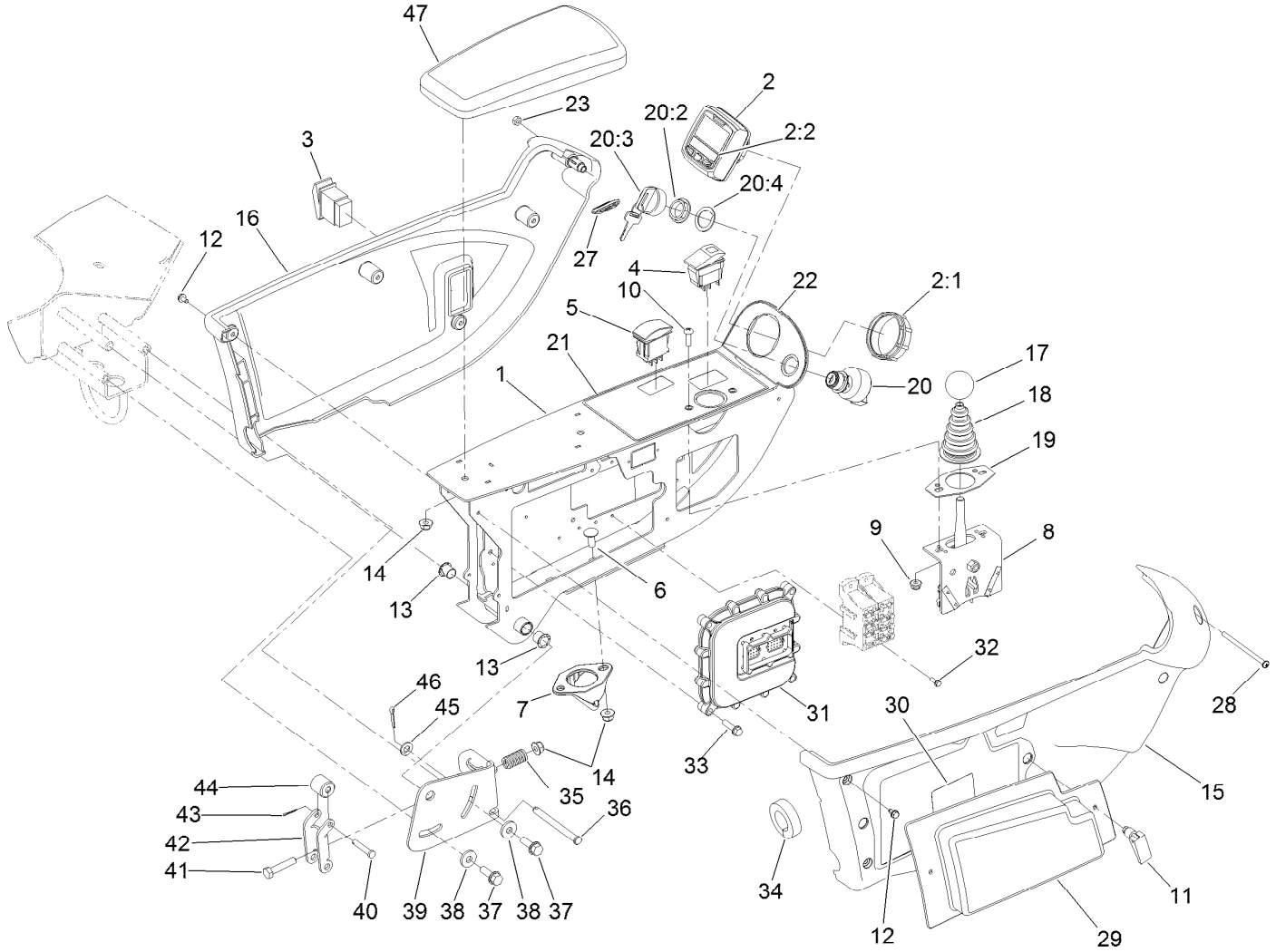

Control Arm Assembly

Ref.	Part Number	Qty.	Description
1	120-3801-03	1	Frame-Arm, Control
2	120-6310	1	LCD Display ASM
2:1	120-4630	1	Nut-Display
2:2	120-6311	1	Decal-Display
3	95-8999	1	Switch
4	105-4232	1	Switch
5	100-1535	1	Switch-Rocker, (On)-Off-(On)
6	3230-23	2	Bolt-CARR
7	125-1938	1	Latch
8	120-5280	1	Bracket-Joystick
9	104-7201	2	Nut-HF, NI
10	3258-166	2	Screw-PRH
11	74-5950	2	Latch-Swell
12	104-2065	10	Screw-HWH
13	256-257	2	Bushing-Nyliner
14	104-8300	5	Nut-HF, NI
15	108-7605	1	Cover-RH
16	108-7604	1	Cover-LH
17	233-42	1	Knob
18	93-5961	1	Boot-Lever

Ref.	Part Number	Qty.	Description
19	112-9181	1	Plate-Boot
20	106-5269	1	Ignition Switch ASM
20:2	108-8660	1	Nut-Mounting
20:3	106-5270	1	Ignition Key Set
20:4	108-8659	1	Washer-Backup
21	125-8754	1	Decal-Panel, Control
22	120-4158	1	Decal-Console, Upper
23	3296-2	1	Nut-Lock, NI
27	99-8970	1	Key-Latch, Hood
28	3250-22	1	Screw-PPH
29	114-0446	1	Panel-Access
30	117-0169	1	Decal-Fuses
31	114-3321	1	Controller-Tec
32	32144-87	4	Screw-HWHTF
33	32144-86	4	Screw-HWHTF
34	110-8912	1	Seal-Foam
35	110-5331	1	Spring-Compression
36	283-88	1	Pin-Clevis
37	3234-29	2	Screw-HHF
38	4-2390	2	Washer-Flat
39	110-5313-03	1	Bracket-Retainer

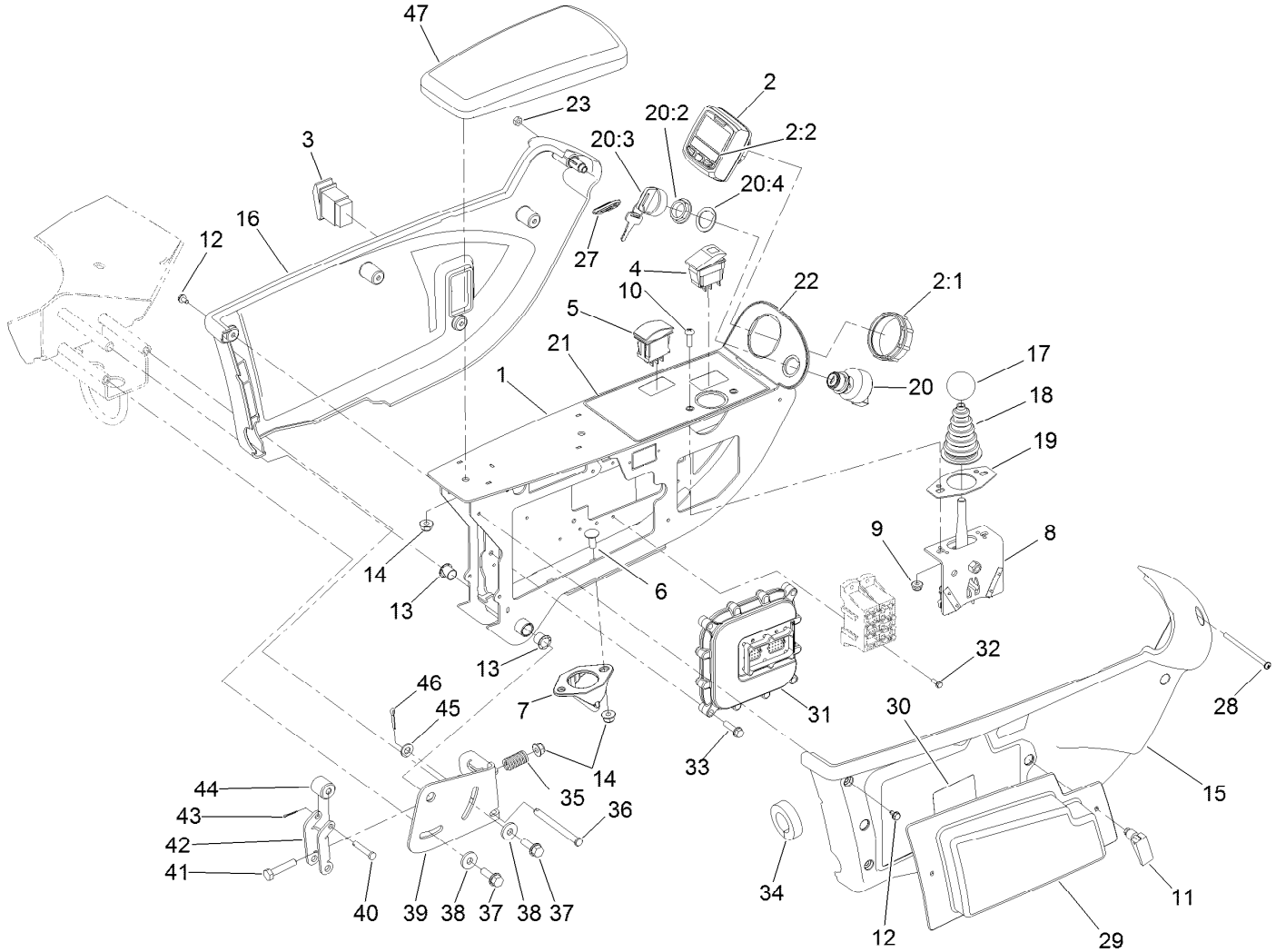

Control Arm Assembly (continued)

Ref.	Part Number	Qty.	Description
40	283-73	1	Pin-Clevis
41	322-7	1	Screw-HH
42	110-5314	1	Latch
43	3272-1	1	Pin-Cotter
44	110-8856	1	Spacer
45	3256-23	1	Washer-Plain
46	3272-10	1	Pin-Cotter
47	108-7602	1	Rest-Arm

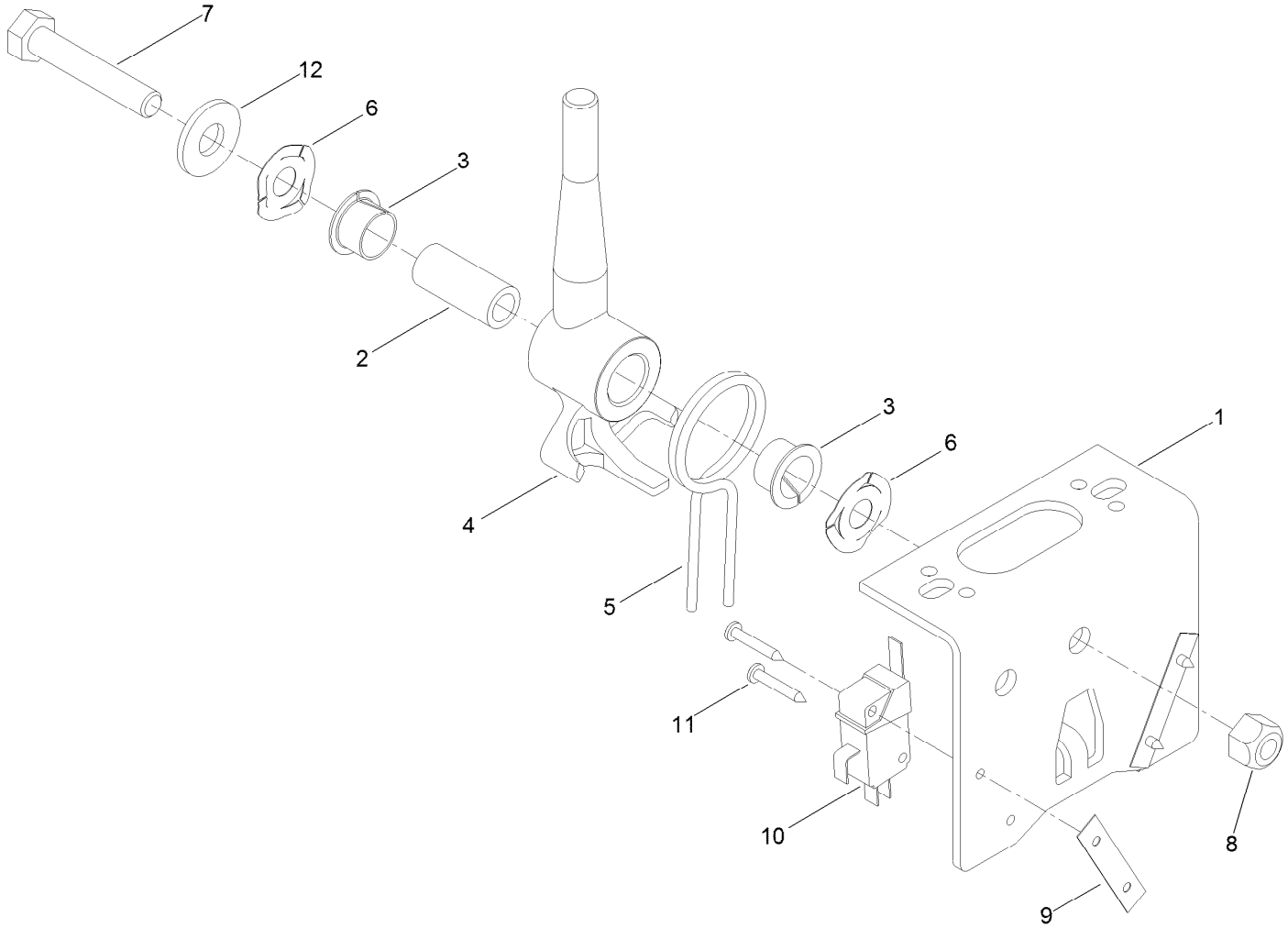

Joystick Bracket Assembly No. 120-5280

Ref.	*Part Number*	*Qty.*	*Description*
1	115-5357-03	1	Bracket-Joystick
2	106-4192	1	Spacer
3	93-5547	2	Bushing-Nylon
4	119-3540	1	Hub-Pivot, Joystick
5	105-8289	1	Spring-Torsion
6	106-4193	2	Washer-Finger, Spring
7	322-9	1	Screw-HH
8	3296-29	1	Nut-Lock, NI
9	3290-354	2	Nut-Speed
10	108-6496	2	Switch (W/Boot)
11	95-3003	4	Screw-PPHTF
12	3256-3	1	Washer-Flat

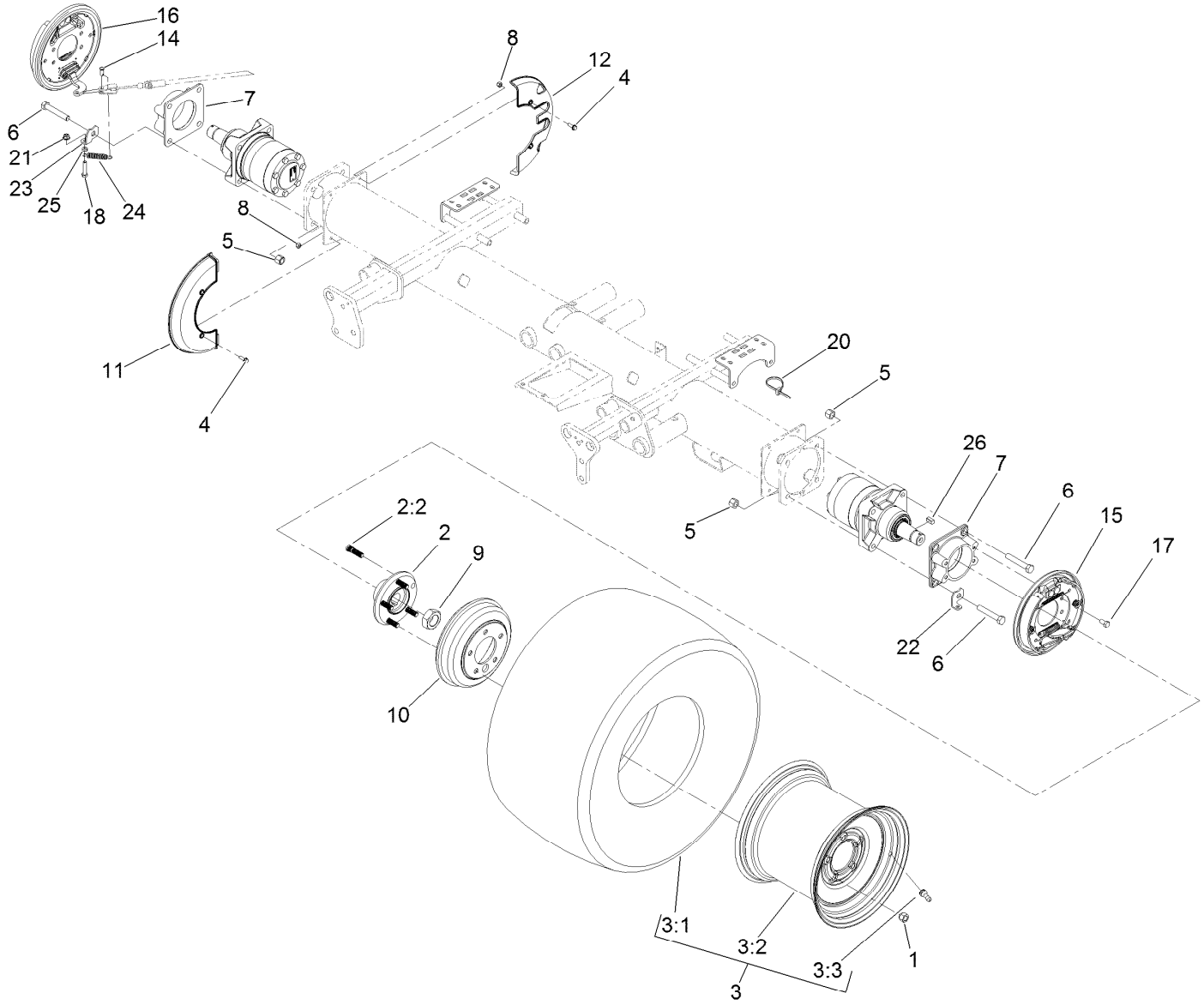

Front Axle Assembly

Ref.	Part Number	Qty.	Description
1	242-50	10	Nut-Lug
2	121-5631	2	Hub ASM
2:2	114-3918	5	Stud-Wheel
3	117-5194	2	Tire ASM
3:1	117-5196	1	Tire
3:2	117-5197	1	Wheel
3:3	232-27	1	Stem-Valve
4	115-5103	8	Screw-HHF
5	3296-23	8	Nut-Lock, NI
6	325-12	8	Screw-HH
7	120-6253-03	2	Adapter-Brake
8	3296-42	8	Nut-Lock, NI
9	117-3290	2	Nut-Hex
10	114-8864	2	Drum-Brake

Ref.	Part Number	Qty.	Description
11	127-2741	2	Shield-Wheel, Front
12	127-2742	2	Shield-Wheel, Rear
14	283-62	2	Pin-Clevis
15	120-6261	1	LH Brake ASM
16	120-6260	1	RH Brake ASM
17	323-4	8	Screw-HH
18	322-7	2	Screw-HH
20	3290-378	2	Tie-Cable
21	104-8300	2	Nut-HF, NI
22	120-6267	1	Clip-Spring, LH
23	120-6266	1	Clip-Spring, RH
24	87-4020	2	Spring-Extension
25	3218-2	2	Nut-Hex Jam
26	117-5198	2	Key-Square

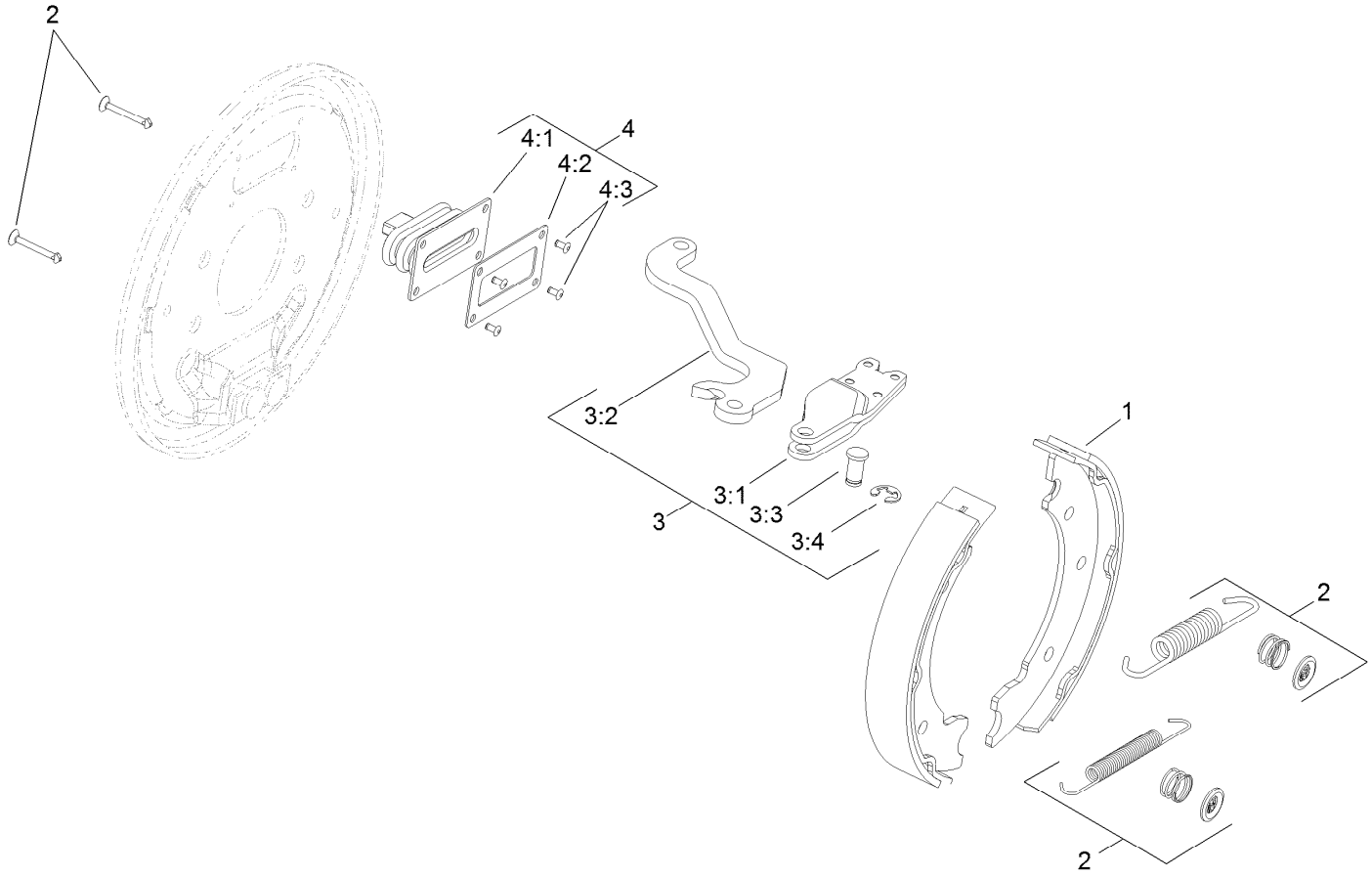

LH Brake Assembly No. 120-6261

Ref.	*Part Number*	*Qty.*	*Description*
1	108-6981	1	Brake Shoe Kit
2	108-6983	1	Brake Hardware Kit
3	110-8910	1	LH Actuator Kit
3:1		1	Housing ●
3:2		1	Lever-LH ●
3:3		1	Pin-Pivot ●
3:4		1	E-Ring ●
4	110-8885	1	Dust Boot Kit
4:1		1	Boot ●
4:2		1	Plate-Back Up ●
4:3		2	Rivet ●

● Not serviced separately

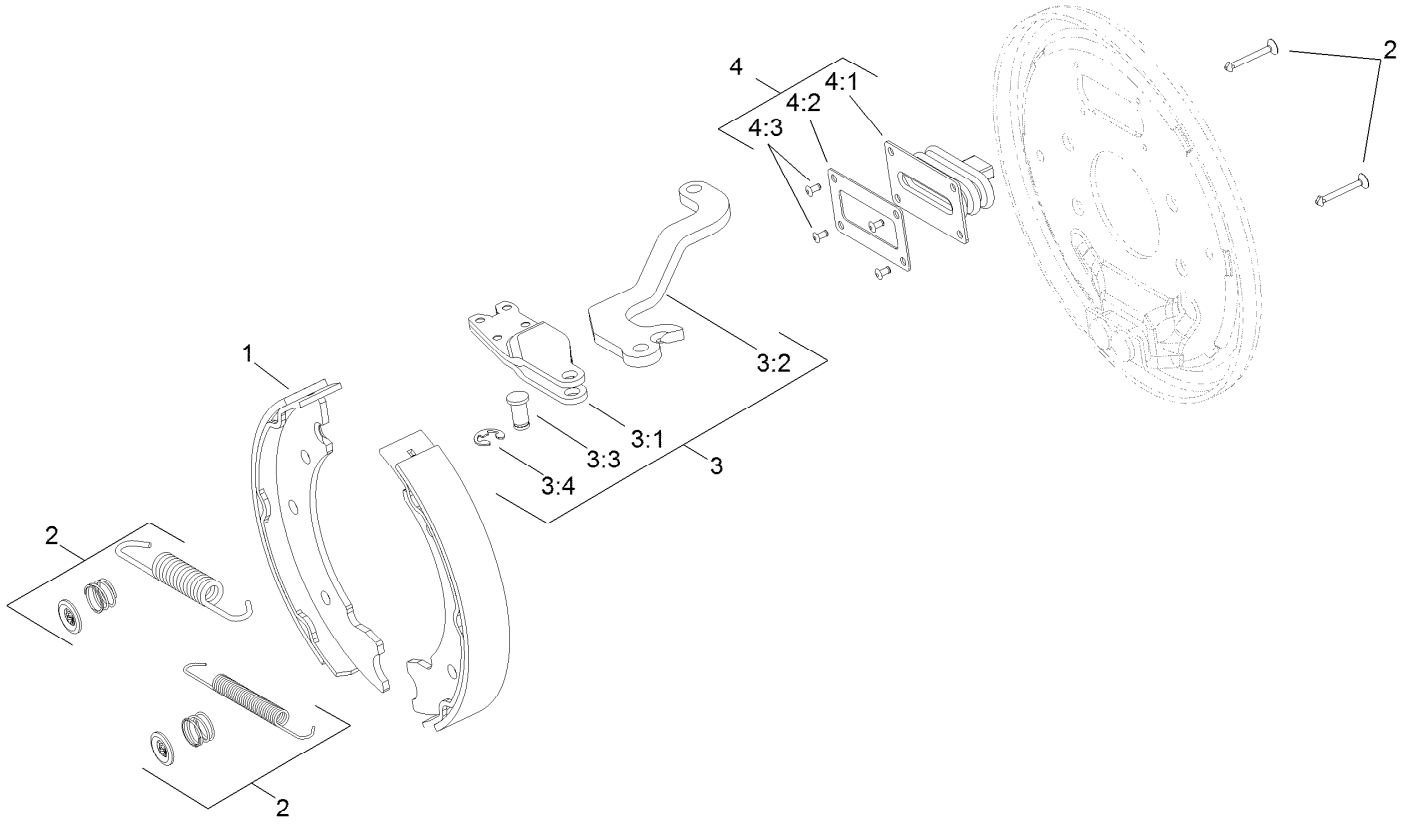

RH Brake Assembly No. 120-6260

Ref.	*Part Number*	*Qty.*	*Description*
1	108-6981	1	Brake Shoe Kit
2	108-6983	1	Brake Hardware Kit
3	110-8884	1	RH Actuator Kit
3:1		1	Housing ●
3:2		1	Lever-RH ●
3:3		1	Pin-Pivot ●
3:4		1	E-Ring ●
4	110-8885	1	Dust Boot Kit
4:1		1	Boot ●
4:2		1	Plate-Back Up ●
4:3		2	Rivet ●

● Not serviced separately

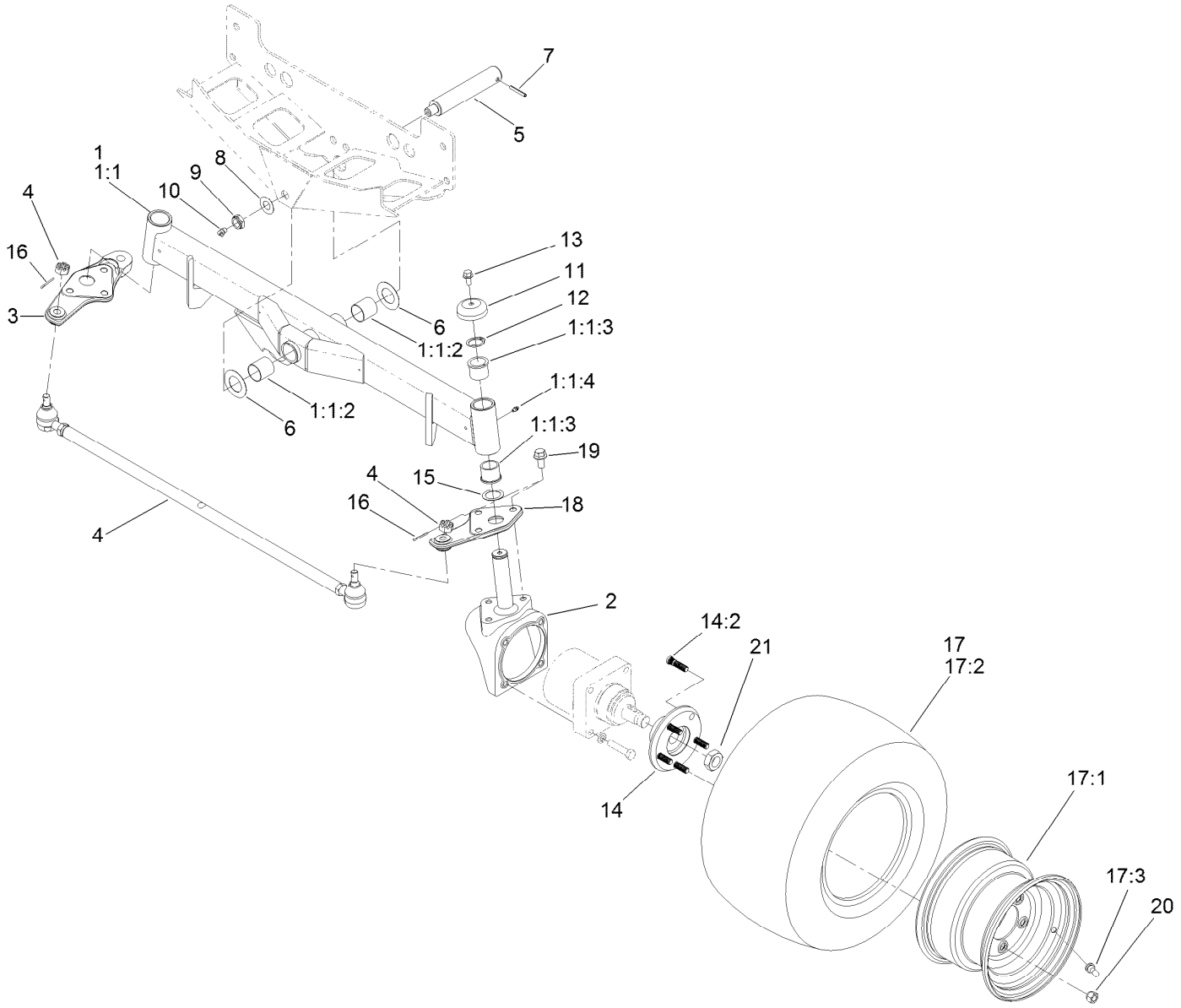

Rear Axle Assembly

Ref.	Part Number	Qty.	Description
1	117-0256-03	1	Axle ASM
1:1		1	Axle ●
1:1:2	99-6964	2	Bushing-Axle
1:1:3	104-0015	4	Bushing-Flange
1:1:4	302-5	2	Fitting-Grease
2	107-4517-03	2	Housing-Motor
3	110-5295-03	1	Link-Drag, RH
4	110-5334-03	1	Tie Rod ASM
5	98-8173	1	Pin-Pivot, Axle
6	99-8432	2	Washer-Thrust
7	32121-32	1	Pin-Roll
8	71-4540	1	Washer-Thrust
9	3296-15	1	Nut-Lock, NI
10	302-33	1	Fitting-Grease
11	69-8890	2	Cap-Spindle

Ref.	Part Number	Qty.	Description
12	32151-77	2	Ring-Retaining, External
13	3234-1	2	Screw-HHF
14	121-5633	2	Hub ASM
14:2	114-3918	5	Stud-Wheel
15	76-2980	2	Washer-Thrust
16	3272-12	2	Pin-Cotter
17	117-0281	2	Rim And Tire ASM
17:1	117-0280	1	Rim
17:2	117-5125	1	Tire
17:3	232-27	1	Stem-Valve
18	110-5297-03	1	Link-Drag, LH
19	3234-6	6	Screw-HHF
20	242-50	10	Nut-Lug
21	26-3790	2	Nut-Lock

● Not serviced separately

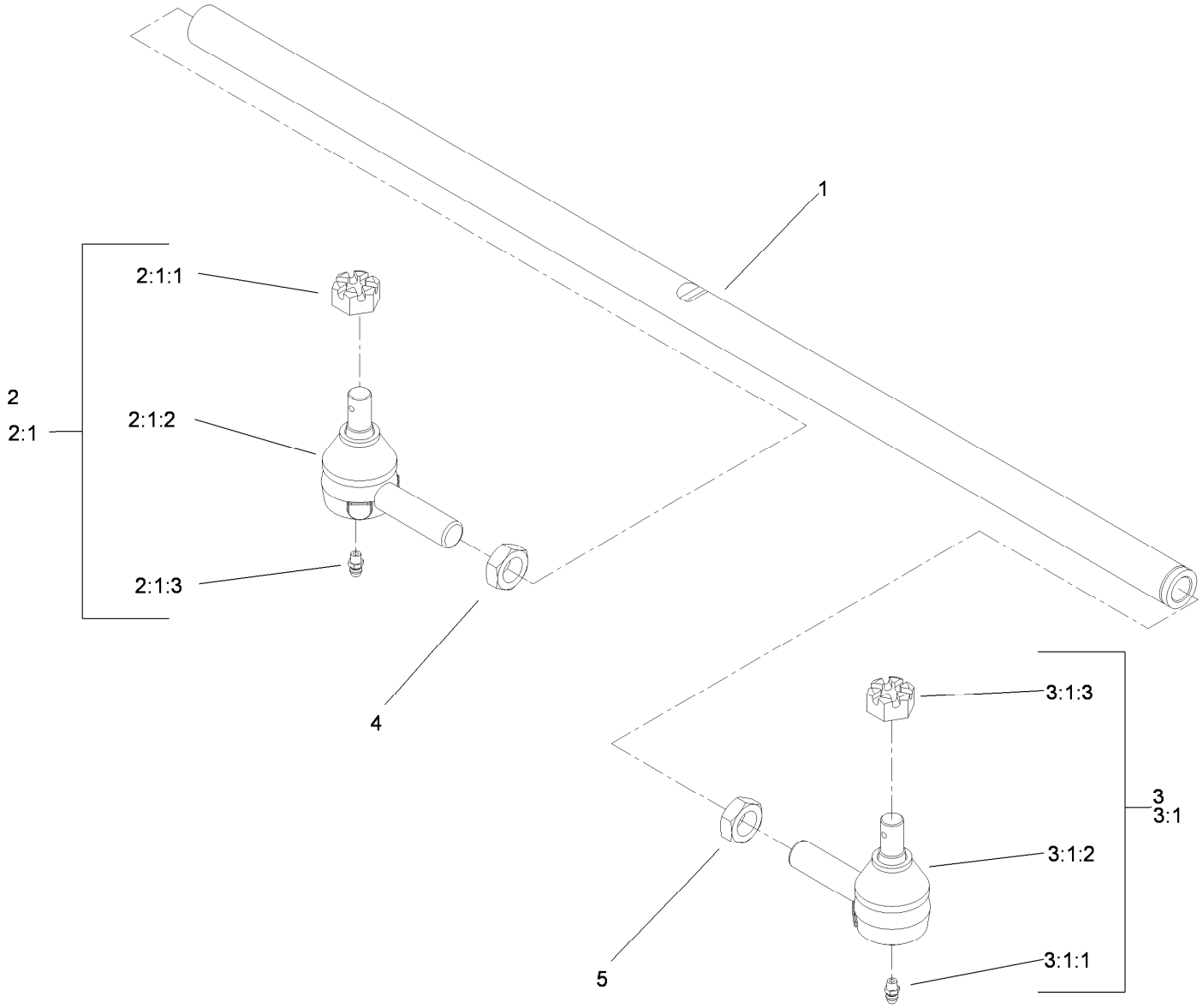

Tie Rod Assembly No. 110-5334-03

Ref.	Part Number	Qty.	Description
1	110-5335	1	Rod-Tie
2	71-4740-03	1	RH Tie Rod End ASM
2:1		1	End-Rod, Tie (RH) ●■
2:1:1	105-7941	1	Nut-Hex, Slotted ●
2:1:2	105-7835	1	Seal ●
2:1:3	302-5	1	Fitting-Grease
3	2411-46-03	1	LH Tie Rod ASM
3:1		1	End-Rod, Tie (LH) ●■
3:1:1	302-5	1	Fitting-Grease ●
3:1:2	105-7835	1	Seal ●
3:1:3	105-7941	1	Nut-Hex, Slotted ●
4	84-5300	1	Nut-Jam
5	110-5337	1	Nut-Jam

● Not illustrated

■ Not serviced separately

No. 1, 4 and 5 Lift Arm and Deck Assembly

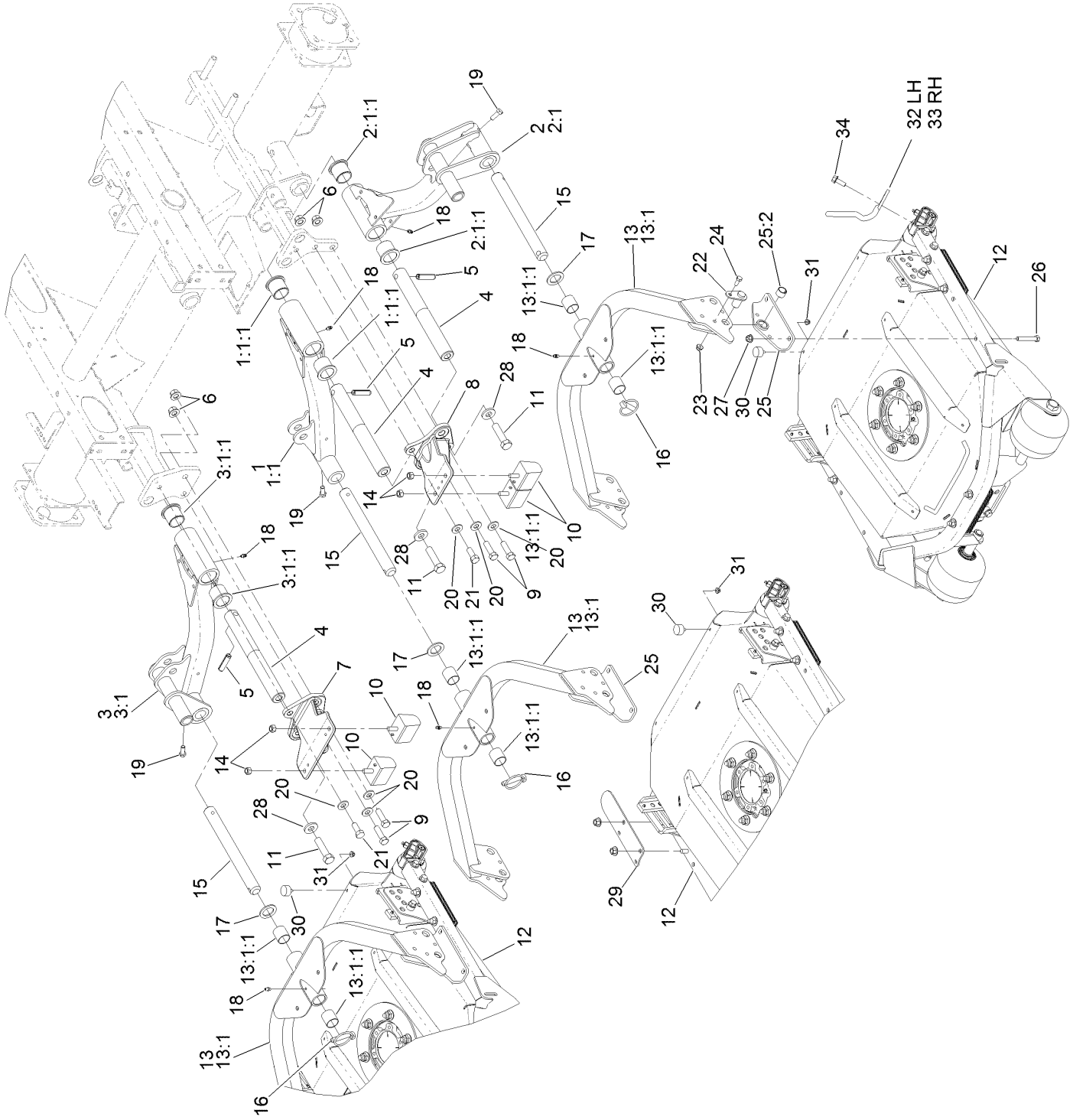

No. 1, 4 and 5 Lift Arm and Deck Assembly (continued)

Ref.	Part Number	Qty.	Description
1	114-0381-03	1	Arm No. 1 ASM
1:1		1	Arm ●
1:1:1	69-6470	2	Bushing-Caster
2	114-0384-03	1	Arm No. 4 ASM
2:1		1	Arm ●
2:1:1	69-6470	2	Bushing-Caster
3	114-0385-03	1	Arm No. 5 ASM
3:1		1	Arm ●
3:1:1	69-6470	2	Bushing-Caster
4	117-0208	3	Shaft-Pivot, Liftarm
5	32121-122	3	Pin-Roll
6	99-5107	4	Nut-Lock
7	117-0250-03	1	Tippe-RH
8	117-0252-03	1	Tipper-LH
9	325-7	4	Screw-HH
10	87-3470	4	Bumper
11	327-7	3	Screw-HH
12	30845	3	22 Inch Contour Plus Deck ASM
13	108-7384-03	3	Carrier Frame ASM
13:1		1	Frame-Carrier ●
13:1:1	108-4000	2	Bushing

Ref.	Part Number	Qty.	Description
14	33025-00	4	Nut-Lock, NI
15	105-7560	3	Shaft-Cu Pivot
16	283-71	3	Pin-Lynch
17	3-6781	3	Washer-Thrust
18	302-5	6	Fitting-Grease
19	323-6	3	Screw-HH
20	87-7270	6	Washer-Thrust
21	325-5	2	Screw-HH
22	117-0132	6	Pin
23	104-8300	6	Nut-HF, NI
24	322-3	6	Screw-HH
25	117-0118	6	Pivot ASM
25:2	108-8482	1	Bushing-Sleeve
26	323-11	12	Screw-HH
27	104-8301	12	Nut-HF, NI
28	99-7667	3	Washer-Flat
29	105-9831-03	1	Bracket-Bumper, No. 1
30	240-14	3	Bumper-Rubber
31	104-7201	3	Nut-HF, NI
32	127-2613-03	1	Guard-Foot, LH
33	127-2614-03	1	Guard-Foot, RH
34	3234-11	2	Screw-HHF

● Not serviced separately

No. 2 and 3 Lift Arm and Deck Assembly

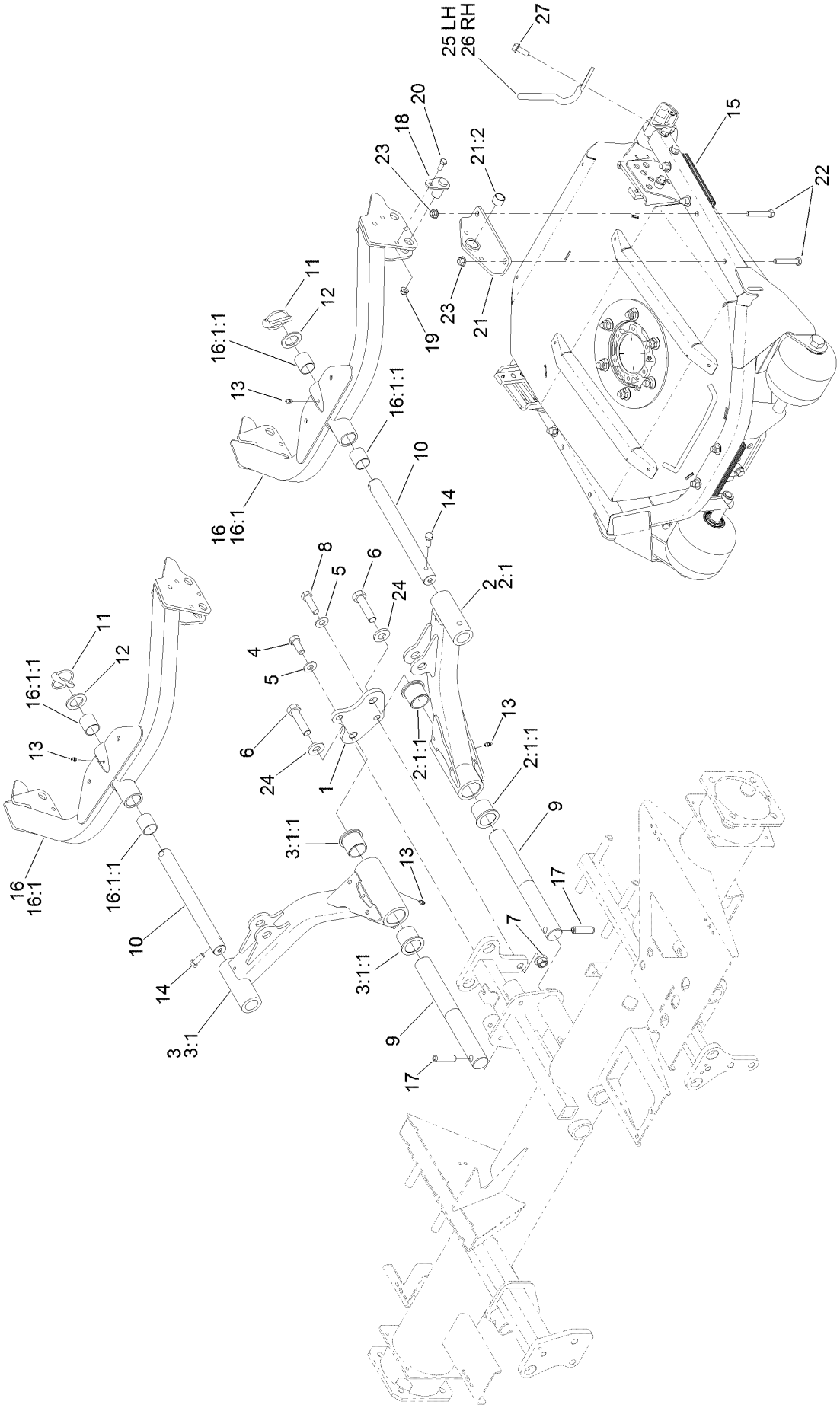

No. 2 and 3 Lift Arm and Deck Assembly (continued)

Ref.	Part Number	Qty.	Description
1	114-0352-01	1	Plate-Bridge, No. 2 And 3
2	114-0382-03	1	Arm No. 2 ASM
2:1		1	Arm ●
2:1:1	69-6470	2	Bushing-Caster
3	114-0383-03	1	Arm No. 3 ASM
3:1		1	Arm ●
3:1:1	69-6470	2	Bushing-Caster
4	325-5	1	Screw-HH
5	87-7270	2	Washer-Thrust
6	327-7	2	Screw-HH
7	99-5107	1	Nut-Lock
8	325-7	1	Screw-HH
9	117-0208	2	Shaft-Pivot, Liftarm
10	105-7560	2	Shaft-Cu Pivot
11	283-71	2	Pin-Lynch
12	3-6781	2	Washer-Thrust
13	302-5	4	Fitting-Grease
14	323-6	2	Screw-HH
15	30845	2	22 Inch Contour Plus Deck ASM
16	108-7384-03	2	Carrier Frame ASM
16:1		1	Frame-Carrier ●
16:1:1	108-4000	2	Bushing
17	32121-122	2	Pin-Roll
18	117-0132	4	Pin
19	104-8300	4	Nut-HF, NI
20	322-3	4	Screw-HH
21	117-0118	4	Pivot ASM
21:2	108-8482	1	Bushing-Sleeve
22	323-11	8	Screw-HH
23	104-8301	8	Nut-HF, NI
24	99-7667	2	Washer-Flat
25	127-2613-03	1	Guard-Foot, LH
26	127-2614-03	1	Guard-Foot, RH
27	3234-11	2	Screw-HHF

● Not serviced separately

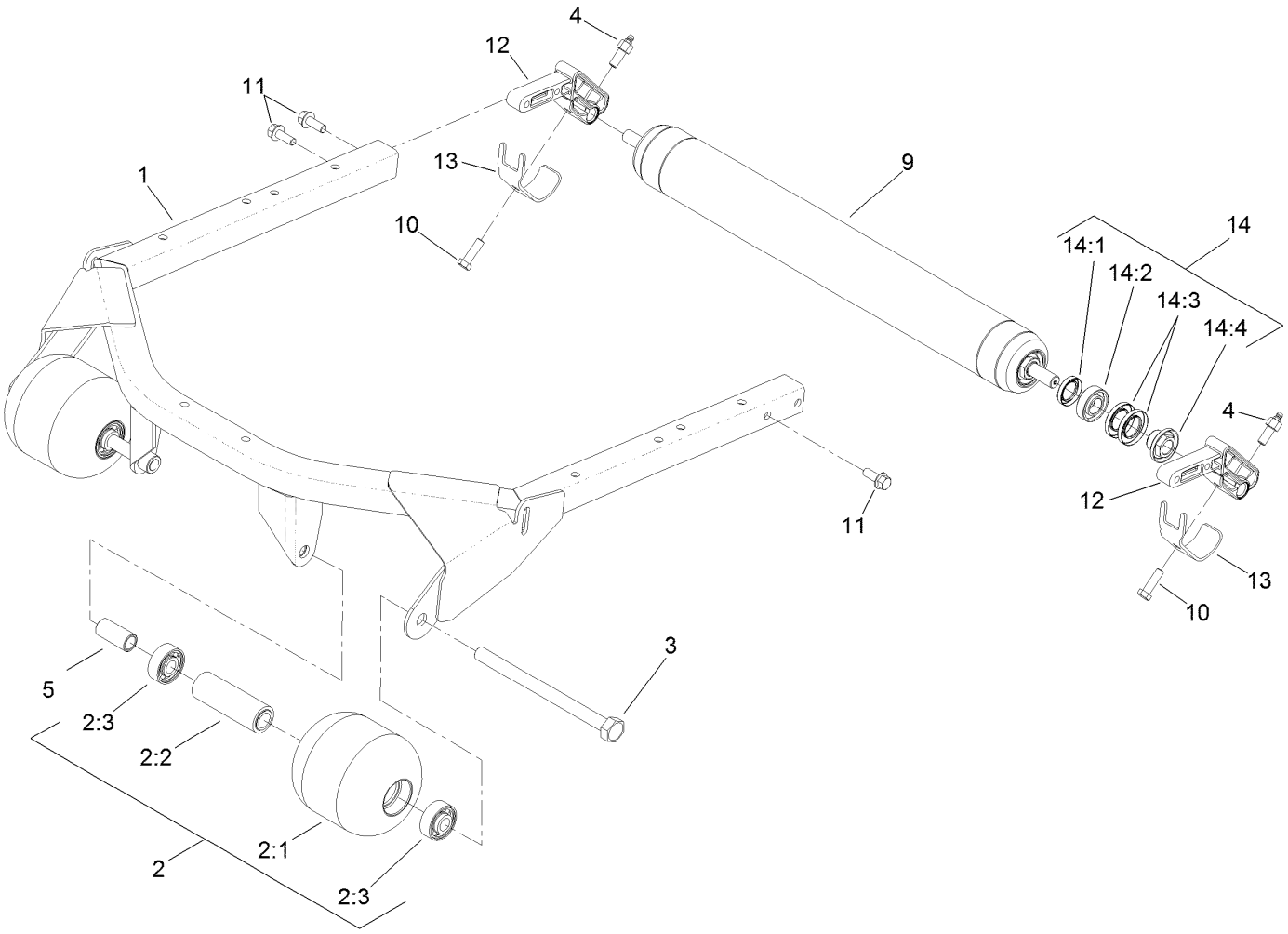

Roller and Carrier Frame Assembly

Ref.	Part Number	Qty.	Description
1	114-0440-03	1	Support-Deck
2	115-3418	2	Roller ASM
2:1	104-1093	1	Roller
2:2	100-5762	1	Spacer-Bearing
2:3	120-3366	2	Bearing
3	117-0172	2	Screw-HH
4	127-6422	2	Screw-Grease, Roller
5	114-0430	2	Tube-Seg, Roller
9	108-7387	1	Roller ASM

Ref.	Part Number	Qty.	Description
10	323-7	2	Screw-HH
11	3234-11	4	Screw-HHF
12	112-5268	2	Mount-Roller
13	107-7816	2	Bracket-Skid
14	114-5430	1	Roller Rebuild Kit
14:1	114-3717	2	Seal-Oil
14:2	112-5290	2	Bearing-Steel, Stainless
14:3	112-7494	4	Seal
14:4	114-5411	2	Nut-Lock, Bearing

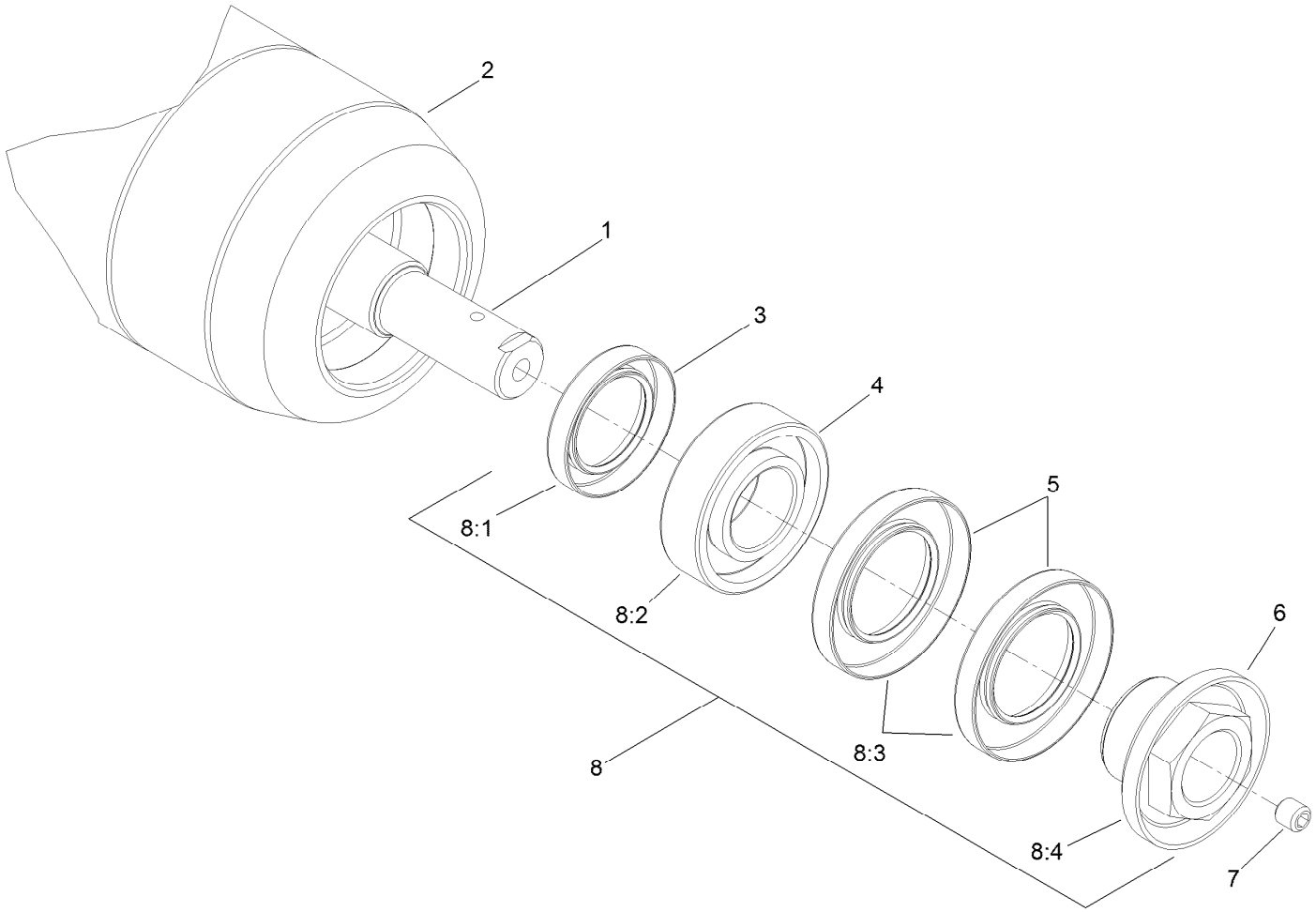

Roller Assembly No. 108-7387

Ref.	*Part Number*	*Qty.*	*Description*
1	108-7388	1	Shaft-Roller
2	108-7389-03	1	Roller Tube ASM
3	114-3717	2	Seal-Oil
4	112-5290	2	Bearing-Steel, Stainless
5	112-7494	4	Seal
6	114-3745	2	Nut-Lock, Bearing
7	108-0989	2	Screw-Set
8	114-5430	1	Roller Rebuild Kit
8:1	114-3717	2	Seal-Oil
8:2	112-5290	2	Bearing-Steel, Stainless
8:3	112-7494	4	Seal
8:4	114-5411	2	Nut-Lock, Bearing

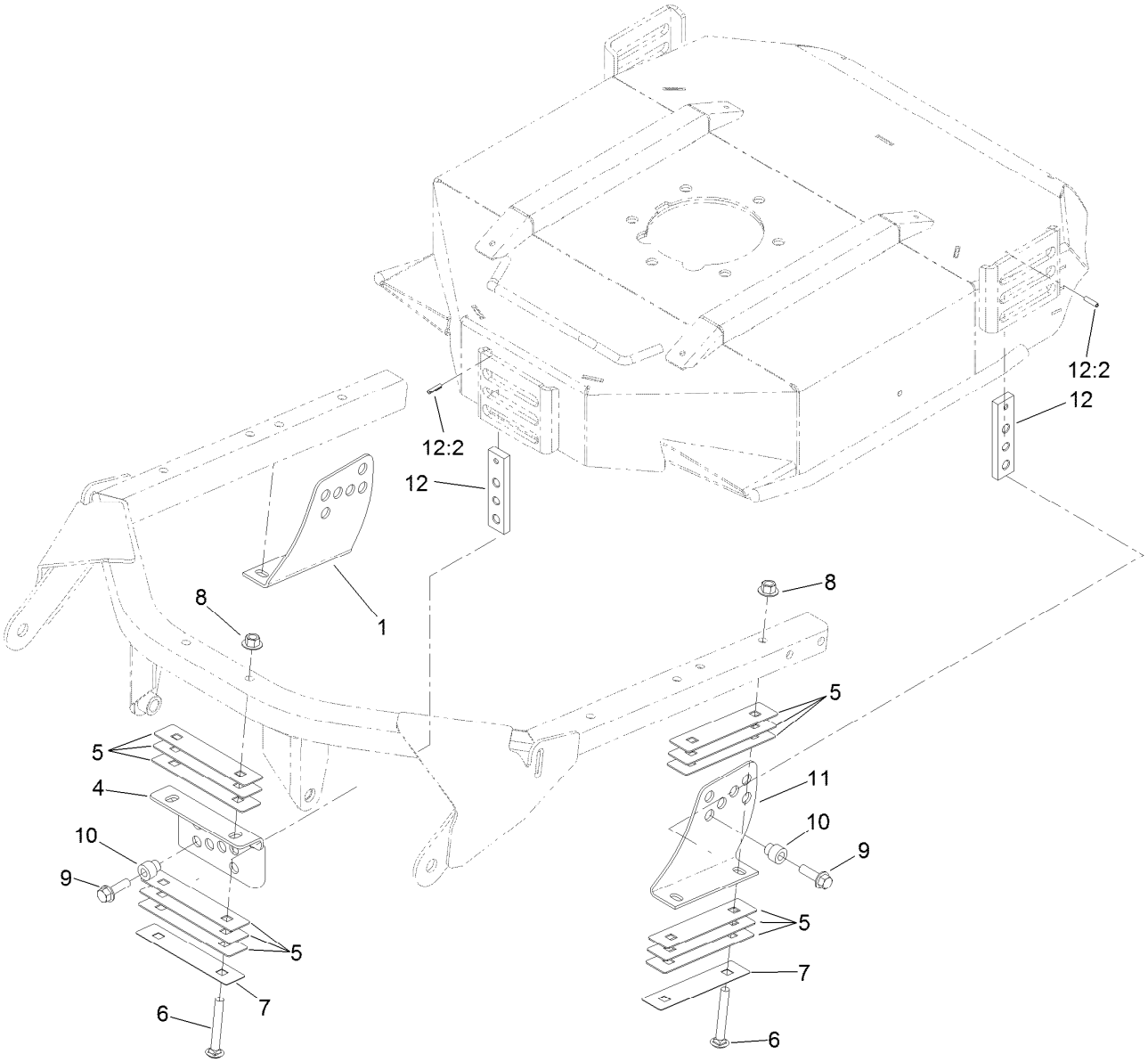

Height-of-Cut Assembly

Ref.	*Part Number*	*Qty.*	*Description*
1	108-7391-03	1	Bracket-HOC, RH
4	104-1052-03	1	Bracket-HOC, Front
5	100-5799	18	Shim-HOC, .060 Inch
6	3231-9	6	Screw-CARR
7	104-4641	3	Shim-HOC, .030 Inch
8	32128-43	6	Nut-Flange
9	3234-24	3	Screw-HHF
10	121-3575	3	Spacer-HOC
11	108-7392-03	1	Bracket-HOC,LH
12	105-9225	3	HOC Plate ASM
12:2	32121-3	1	Pin-Spring

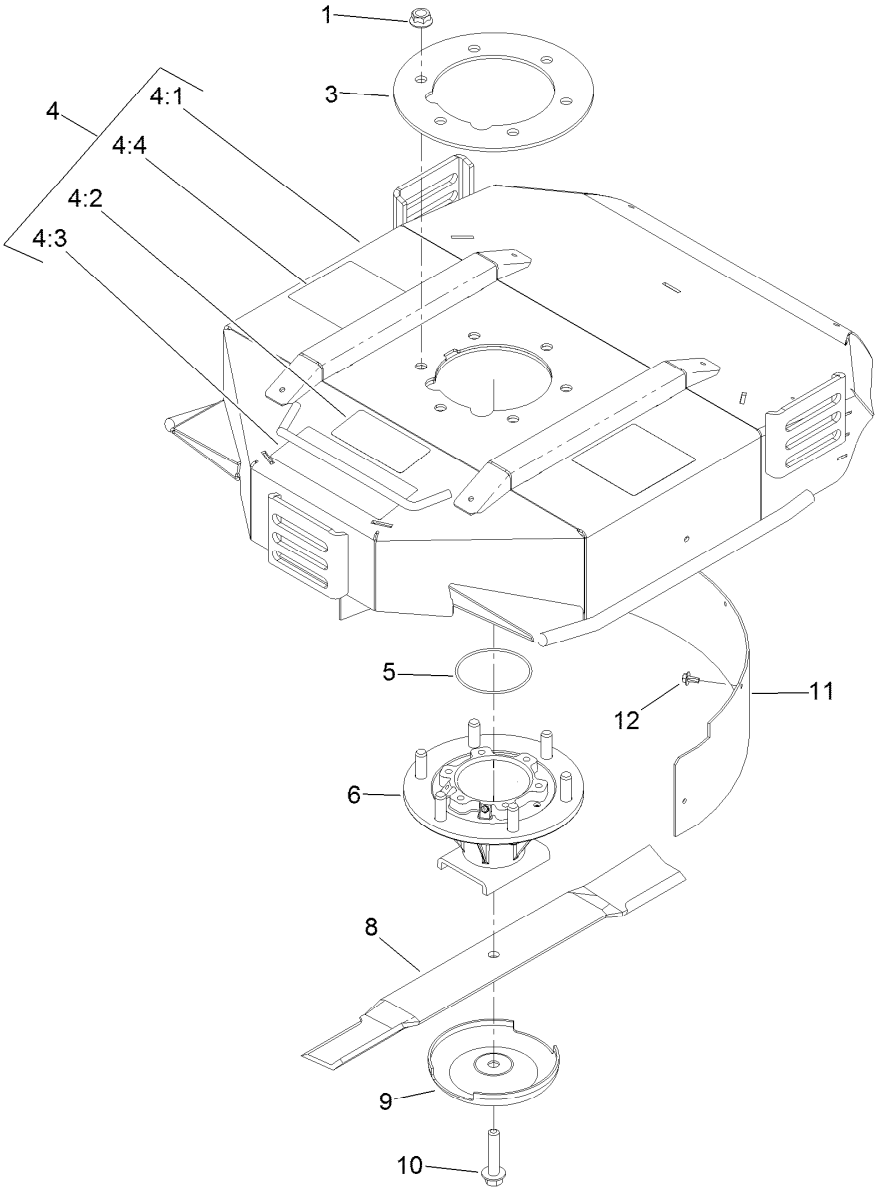

Spindle, Blade and Chamber Assembly

Ref.	Part Number	Qty.	Description
1	32128-39	6	Nut-HHF
3	104-1051-03	1	Plate-Spindle
4	108-7373	1	Chamber ASM
4:1		1	Chamber ●
4:2	93-7818	1	Decal-Torque, Blade Bolt
4:3	121-3627	1	Decal-Height Of Cut
4:4	117-4764	2	Decal-Danger
5	237-161	1	O-Ring
6	115-3435	1	Spindle ASM

Ref.	Part Number	Qty.	Description
8	108-7395-03	1	Blade-Combo, 22In
8	114-0434-03	1	Blade-High Lift, 22In
8	114-0435-03	1	Blade-Atomic, 22In
8	117-0209-03	1	Blade-Angle Sail, 22In
9	72-9361	1	Cup-Scalp, Anti
10	92-5816	1	Bolt-Blade
11	108-7409-01	1	Baffle-Mulching
12	46-8560	5	Screw-HHFTF

● Not serviced separately

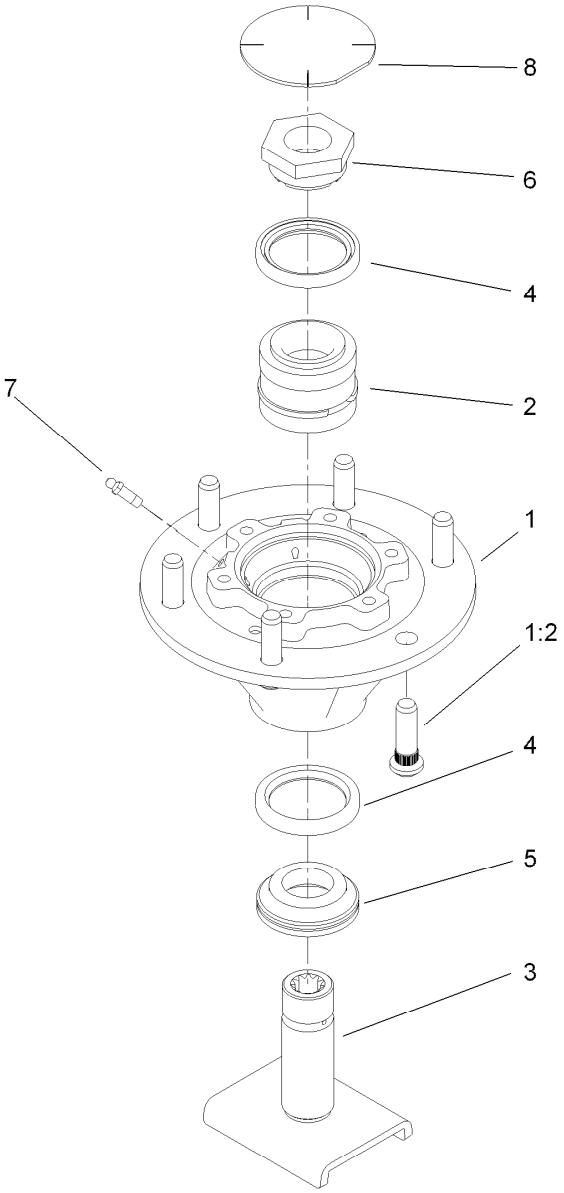

Spindle Assembly No. 115-3435

Ref.	Part Number	Qty.	Description
1	115-3434	1	Spindle
1:2	10-6830	6	Stud-Type, Drive
2	100-5703	1	Spacer And Bearing ASM
3	100-5705	1	Spindle Shaft ASM
4	253-154	2	Seal-Oil
5	69-6950	1	Spacer-Shaft, Spindle
6	100-5709	1	Nut-Spindle, Spcl
7	302-62	2	Fitting-Grease
8	94-2703	1	Plug

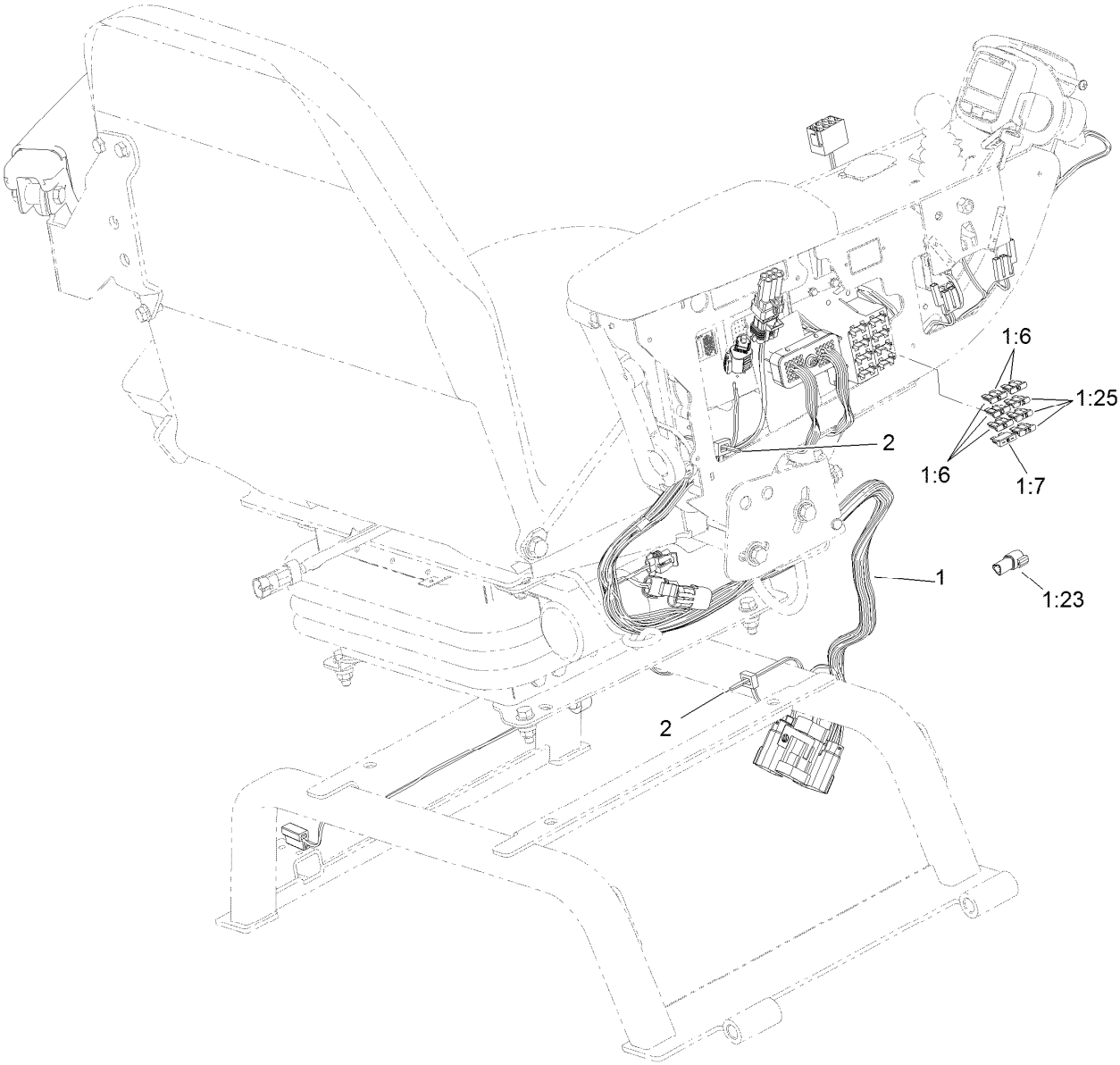

Seat and Control Arm Wiring Harness Assembly

Ref.	*Part Number*	*Qty.*	*Description*
1	115-8081	1	Harness-Wire, Seat
1:6	218-578	3	Fuse-Blade, 10 Amp
1:7	109355	1	Fuse-Blade, 15 Amp
1:23	32180-043	1	Resistor-120 Ohm
1:25	114241	3	Fuse-Blade, 7.5 Amp
2	3290-378	3	Tie-Cable

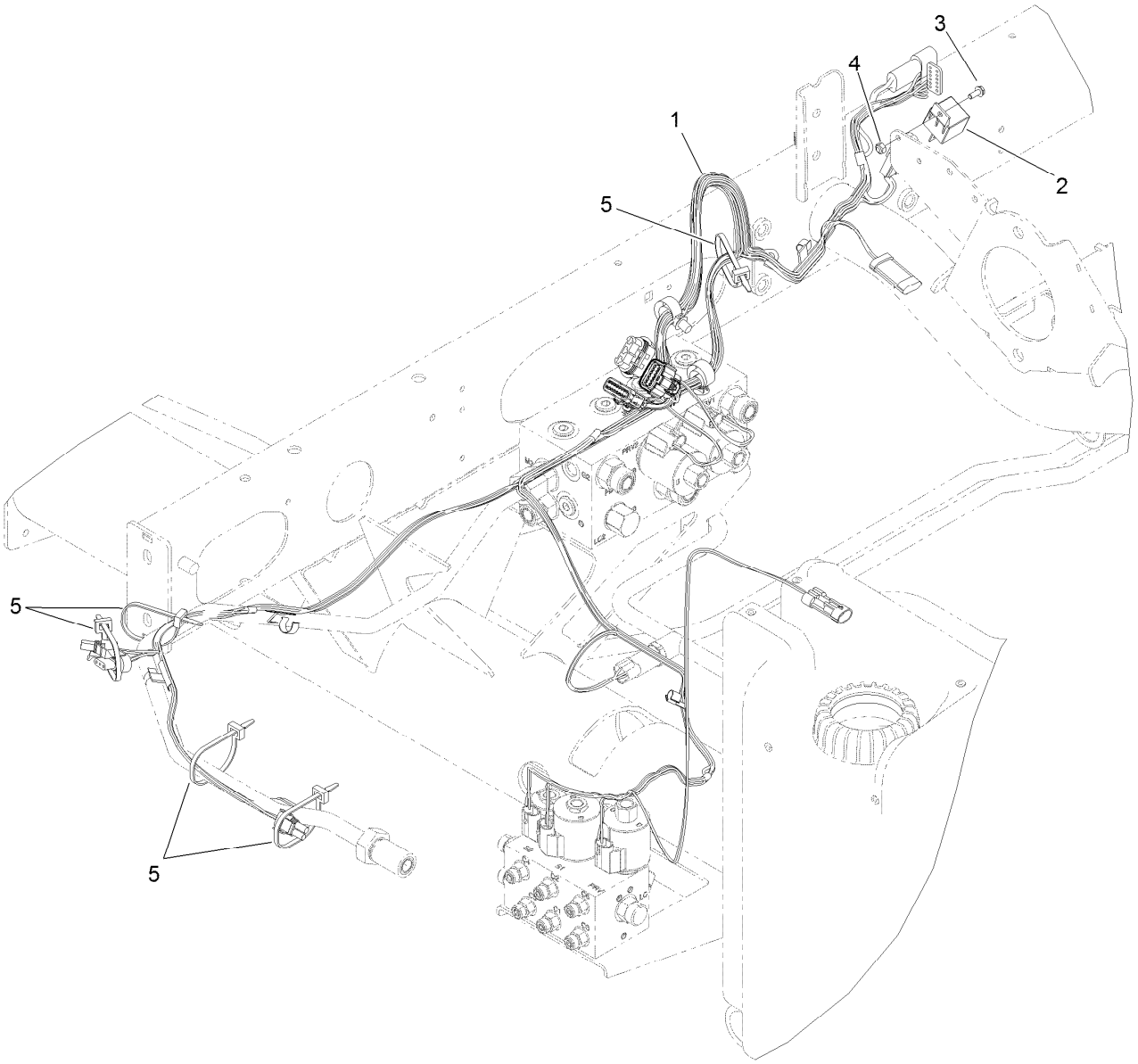

Main Wiring Harness Assembly

Ref.	*Part Number*	*Qty.*	*Description*
1	120-6384	1	Harness-Wire, Main
2	99-7435	1	Relay
3	3290-321	1	Screw-HWH
4	3296-2	1	Nut-Lock, NI
5	3290-378	10	Tie-Cable

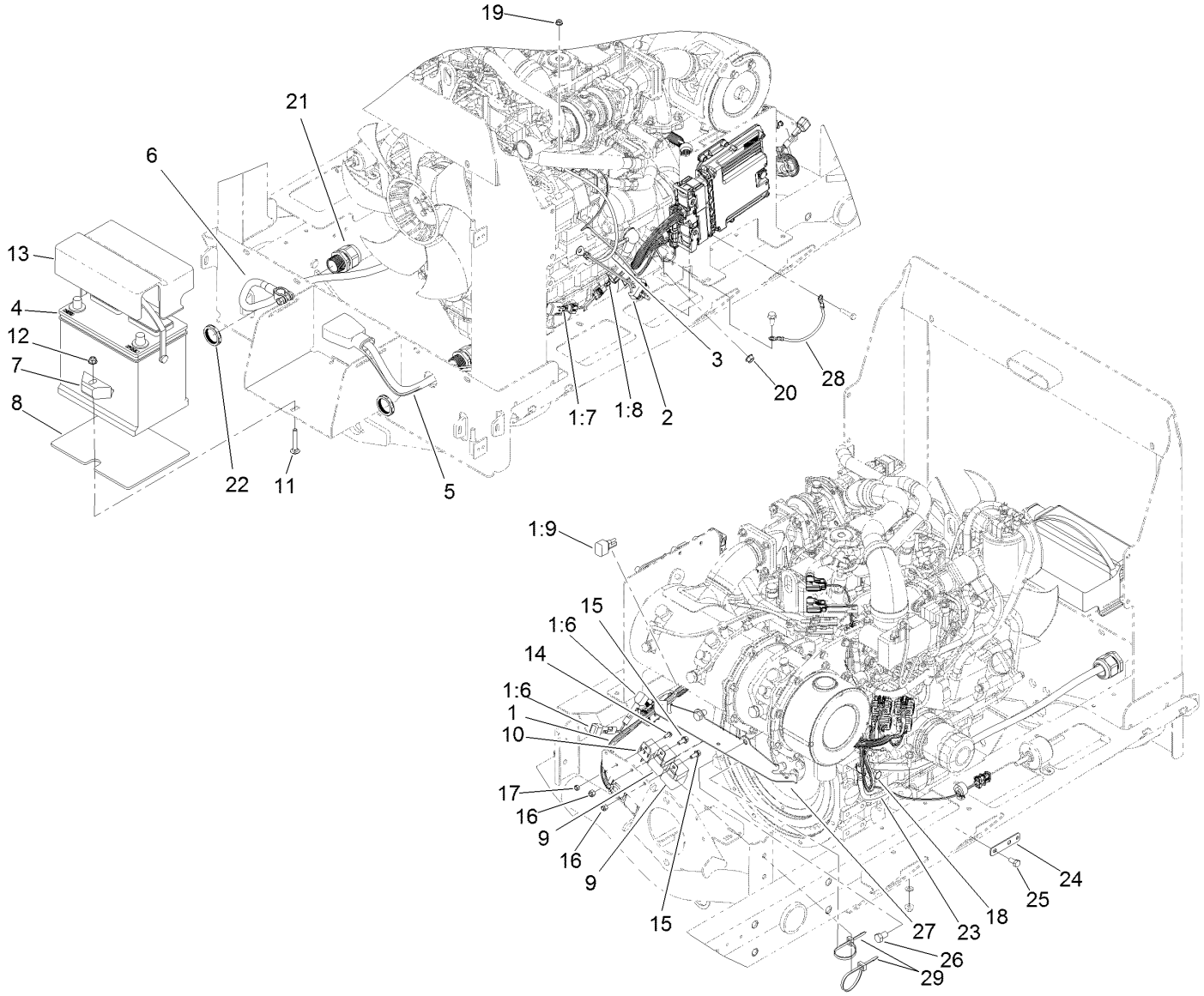

Electrical Assembly

Ref.	Part Number	Qty.	Description
1	122-0893	1	Harness-Wire, Engine
1:6	100-4918	2	Diode
1:7	121-8861	1	Fuse-Mini Blade, 2 Amp
1:8	121-8866	1	Fuse-Mini Blade, 10 Amp
1:9	104-4022	1	Resistor-75 Ohm
2	99-3441	1	Harness-Wire, Fusible Link
3	100-5552	1	Harness-Wire
4	104-9979	1	Battery
5	121-8850	1	Cable-Battery, Positive
6	121-8851	1	Cable-Battery, Negative
7	66-2490	1	Retainer-Battery
8	127-2781	1	Mat-Battery
9	99-7430	2	Relay-Mini
10	99-7435	1	Relay
11	3230-6	1	Bolt-CARR
12	104-8300	1	Nut-HF, NI
13	121-5615	1	Cover-Battery

Ref.	Part Number	Qty.	Description
14	3290-321	1	Screw-HWH
15	3234-33	2	Screw-HHF
16	3296-42	2	Nut-Lock, NI
17	3296-2	1	Nut-Lock, NI
18	33115-020	1	Screw-HH
19	33003-00	1	Nut-HF
20	33004-00	1	Nut-HF
21	121-8854	2	Grip-Cord
22	121-8855	2	Locknut-Grip, Cord
23	121-8856	1	Cable-Ground, Engine
24	121-5636	1	Tab-Harness
25	33114-016	2	Screw-HH
26	33115-016	2	Screw-HH
27	132-9706-03	1	Bracket-Harness
28	122-0058	1	Harness-Wire, Ground
29	3290-378	4	Tie-Cable

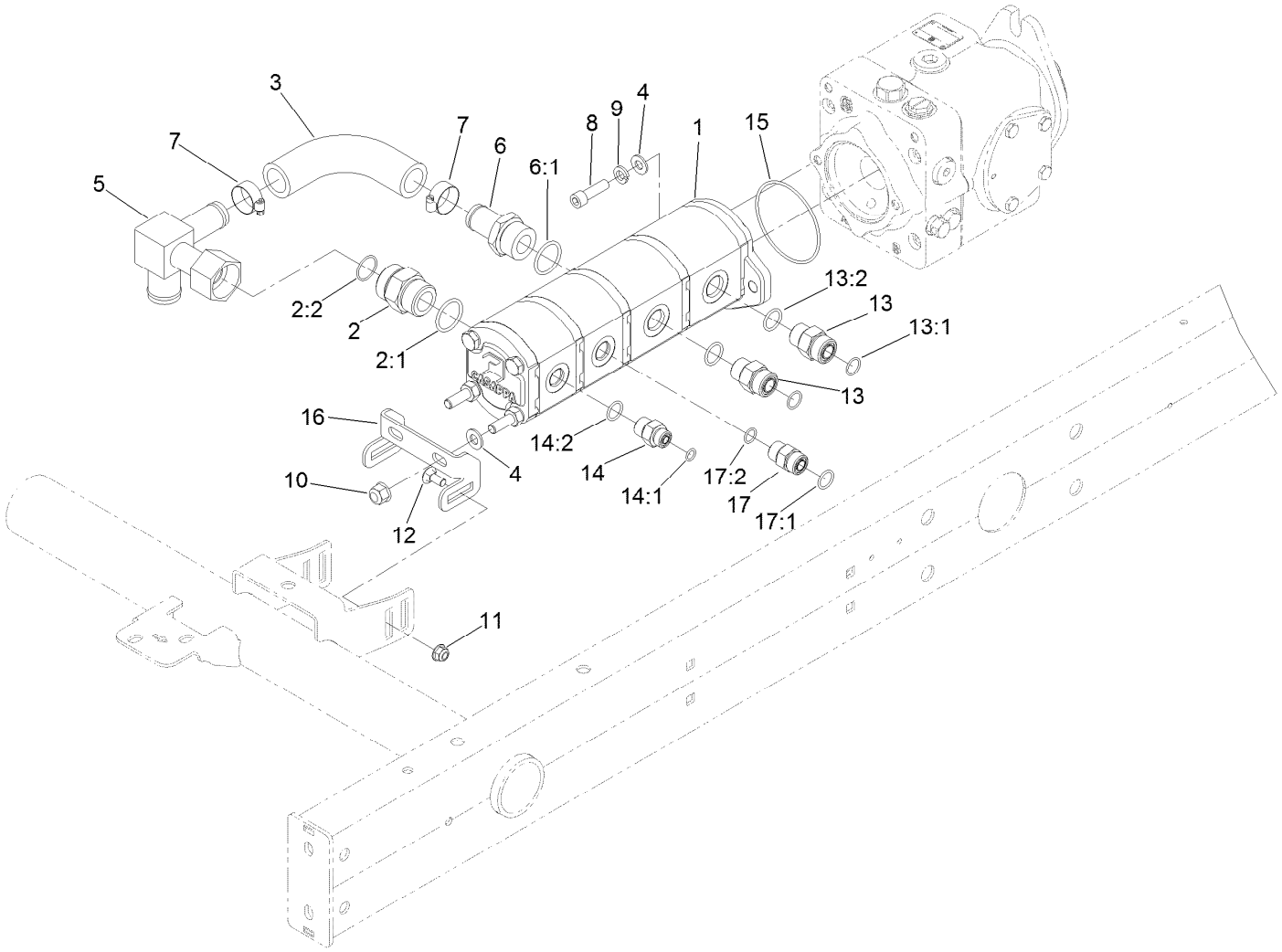

Gear Pump Mounting Assembly

Ref.	Part Number	Qty.	Description
1	121-5645	1	Gear Pump ASM
2	104-3797	1	Fitting-Straight
2:1	237-146	1	O-Ring
2:2	340-65	1	O-Ring
3	108-1683	1	Hose-Formed
4	3256-24	4	Washer-Flat
5	108-1672	1	Manifold-Tube
6	354-78	1	Fitting-STR
6:1	237-146	1	O-Ring
7	2412-34	2	Clamp-Hose
8	3274-1	2	Screw-HSH
9	3253-5	2	Washer-Lock
10	103-9511	2	Nut-Lock, NI

Ref.	Part Number	Qty.	Description
11	104-8300	2	Nut-HF, NI
12	3230-1	2	Bolt-CARR
13	340-7	2	Fitting-Straight
13:1	237-65	1	O-Ring
13:2	237-80	1	O-Ring
14	340-3	1	Fitting-Straight
14:1	237-22	1	O-Ring
14:2	237-79	1	O-Ring
15	237-161	1	O-Ring
16	108-1801-01	1	Bracket-Support, Pump
17	340-4	1	Fitting-Straight
17:1	237-30	1	O-Ring
17:2	237-79	1	O-Ring

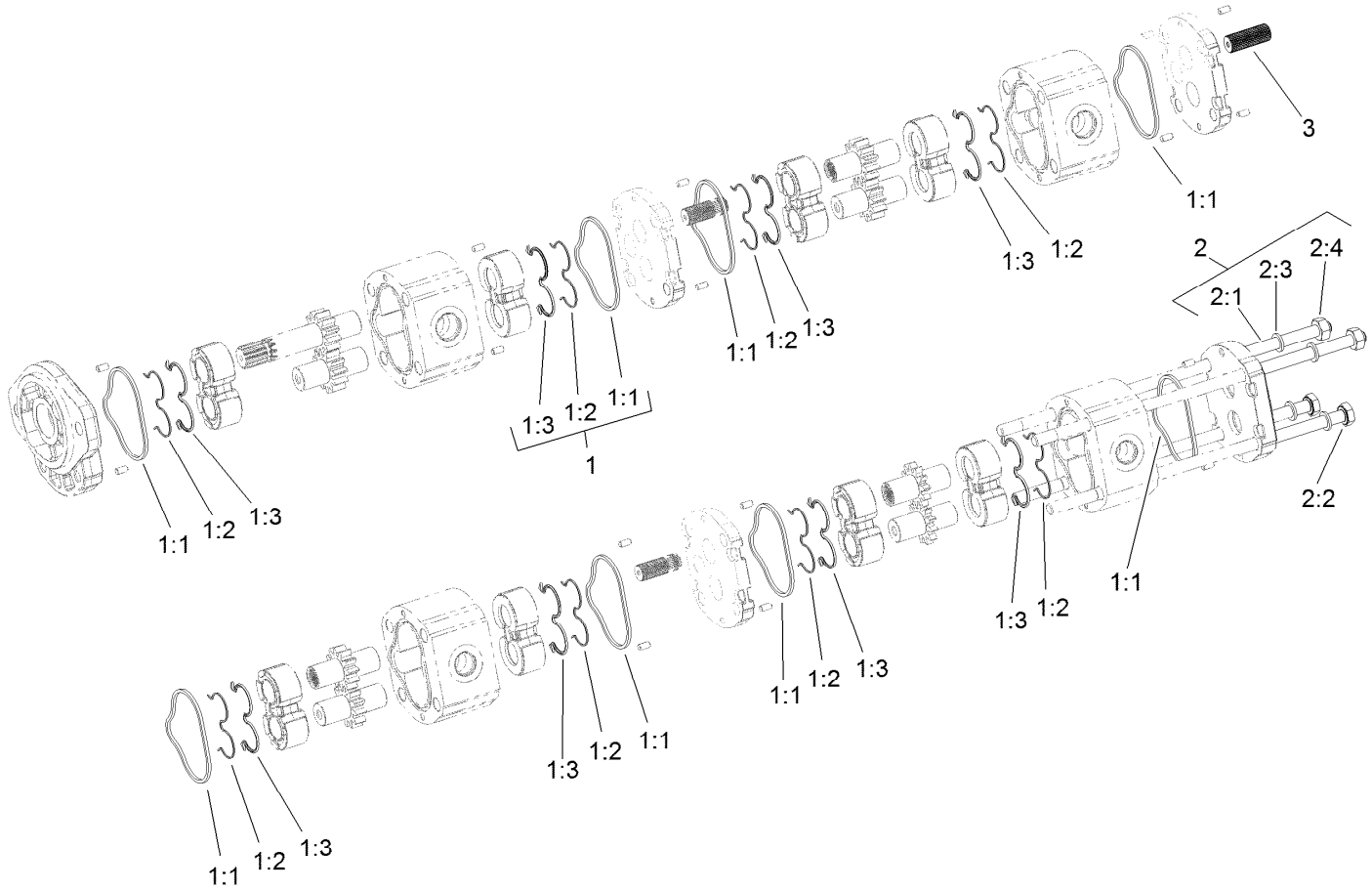

Gear Pump Assembly No. 121-5645

Ref.	*Part Number*	*Qty.*	*Description*
1	108-4595	1	Seal Kit
1:1		8	Seal ●
1:2		8	Seal ●
1:3		8	Ring-Back Up ●
2	120-6273	1	Bolt Kit
2:1		2	Stud Bolt ●
2:2		2	Screw ●
2:3		4	Washer ●
2:4		2	Nut ●
3	120-6284	3	Hub-Connecting

● Not serviced separately

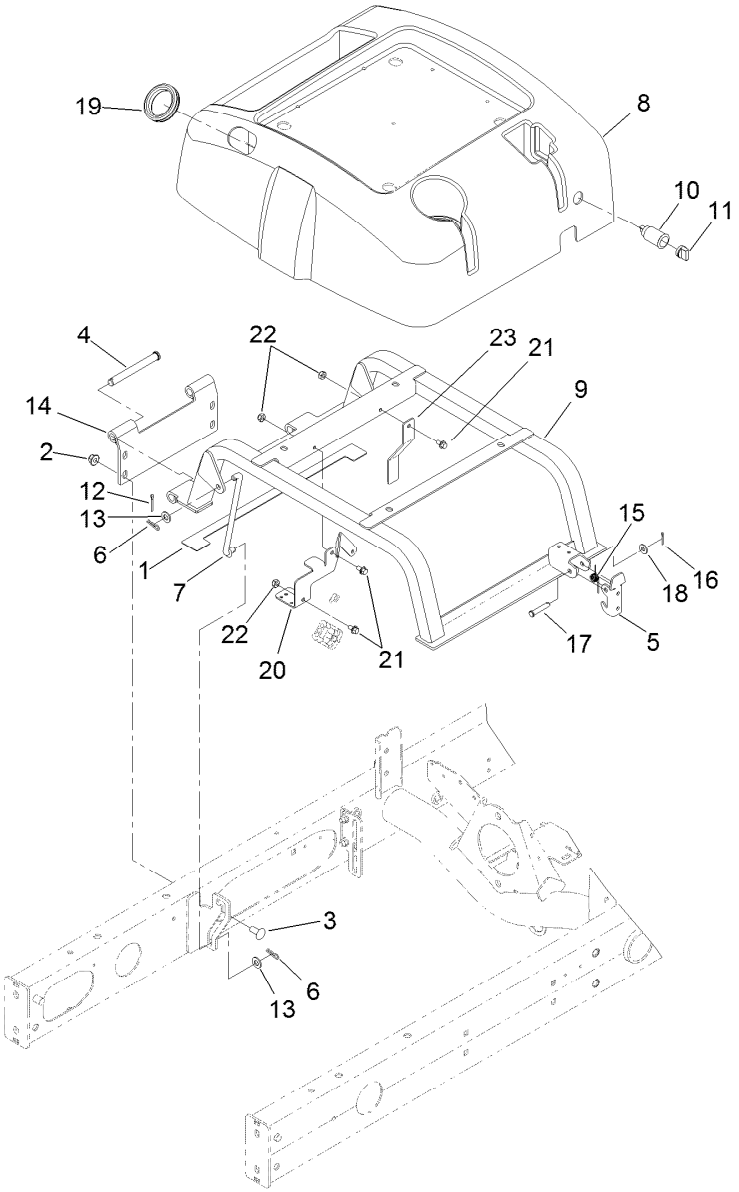

Seat Base Assembly

Ref.	Part Number	Qty.	Description
1	110-5255	2	Bumper-Base, Seat
2	104-8301	4	Nut-HF, NI
3	3231-27	4	Screw-CARR
4	283-83	2	Pin-Clevis
5	110-8971	1	Latch
6	3290-307	4	Pin-Cotter
7	98-0917	2	Rod-Prop
8	108-1757	1	Cover-Seatbase
9	125-2122-03	1	Seat Base ASM
10	99-7411	1	Point-Power
11	99-7416	1	Cap
12	3272-11	2	Pin-Cotter
13	3256-24	4	Washer-Flat
14	125-2121-03	1	Hinge-Seatbase
15	104-4821	1	Spring-Torsion
16	3272-6	1	Pin-Cotter
17	94-3829	1	Pin-Clevis
18	3256-2	1	Washer-Flat
19	240-12	1	Grommet-Rubber
20	127-2711-03	1	Bracket-Harness
21	3234-13	3	Screw-HHF
22	3296-16	3	Nut-Lock, NI
23	127-2615-03	1	Bracket-Harness, Wire

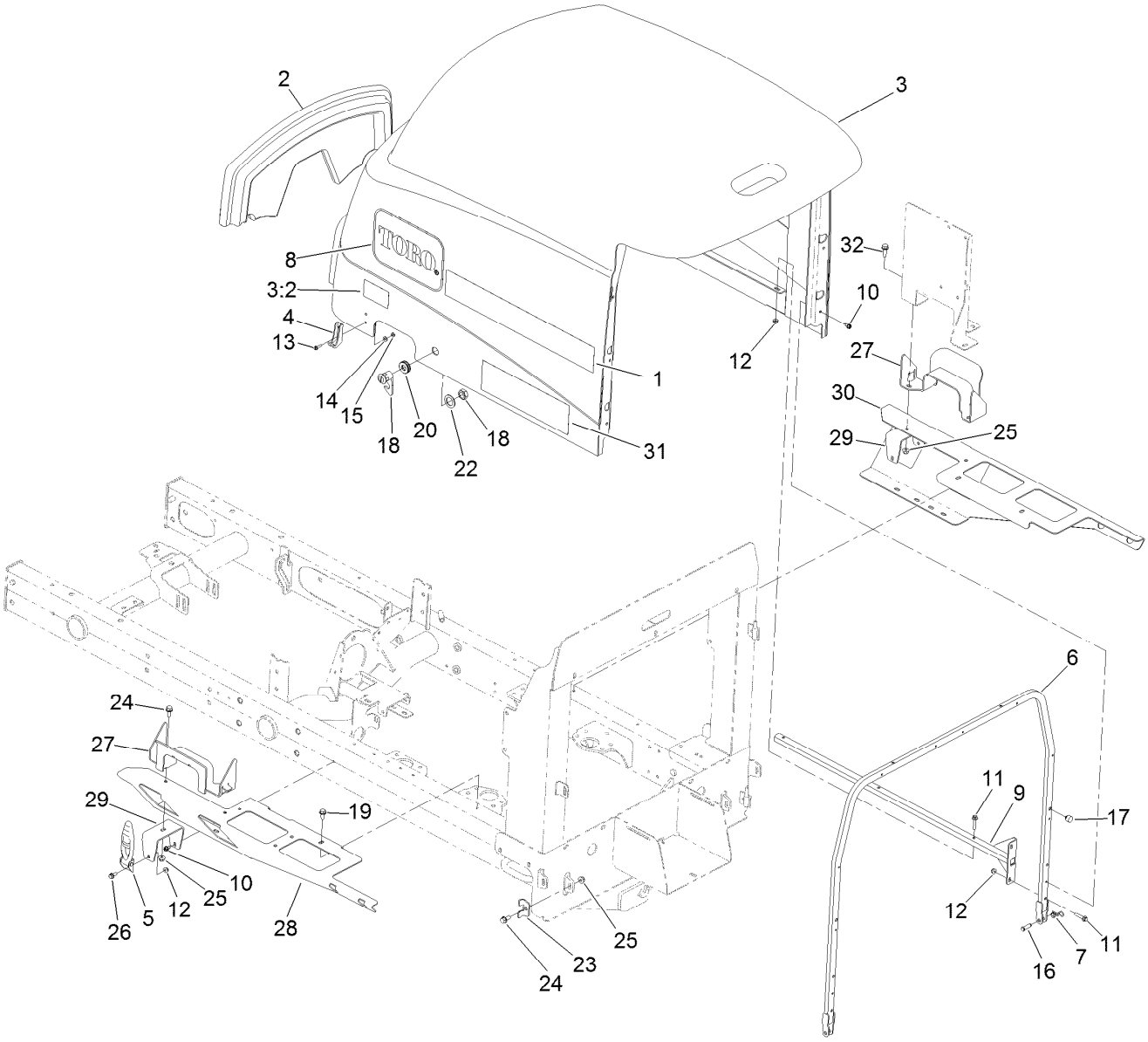

Hood Assembly

Ref.	Part Number	Qty.	Description
1	117-0173	2	Decal
2	108-7587	1	Saddle-Hood
3	121-5616	1	Hood ASM
3:2	106-6754	1	Decal-Danger
4	103-2897	2	Latch-Catch
5	103-2898	2	Latch-Rubber
6	125-8813-03	1	Tube-Frame, Hood
7	105-7512	2	Pin-Tie, Bow
8	66-6140	2	Decal
9	108-1790-03	2	Tube
10	32104-17	12	Screw-HWH
11	3234-21	10	Screw-HHF
12	104-7201	12	Nut-HF, NI
13	32105-13	4	Screw-HWH
14	3256-14	4	Washer-Flat
15	3296-12	4	Nut-Lock, NI

Ref.	Part Number	Qty.	Description
16	283-61	2	Pin-Yoke
17	107-8042	2	Bumper-Rubber
18	98-5398	1	Latch
19	32104-32	5	Screw-HWH
20	104-1453	1	Grommet
22	99-4958	1	Spacer
23	110-8946	2	Clamp-Frame, Radiator
24	3234-5	4	Screw-HHF
25	104-8300	6	Nut-HF, NI
26	3234-33	2	Screw-HHF
27	121-5627-03	2	Guide-Hood
28	110-5253-01	1	Adapter-Hood, LH
29	110-5256-01	2	Bracket-Latch, Hood
30	110-5254-01	1	Adapter-Hood, RH
31	110-8859	2	Decal
32	3234-17	2	Screw-HHF

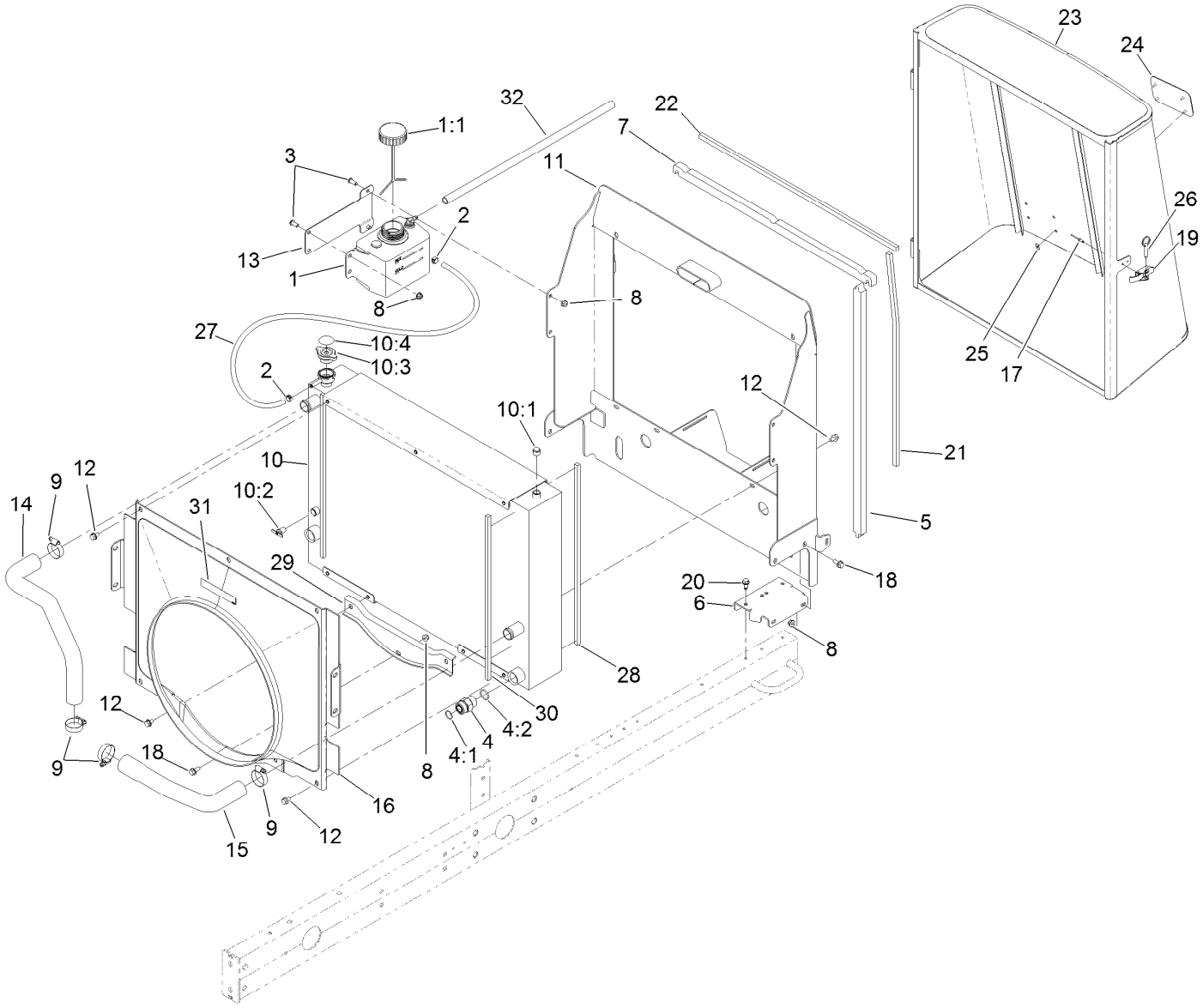

Radiator and Shroud Assembly

Ref.	Part Number	Qty.	Description
1	120-5573	1	Coolant Reservoir ASM
1:1	87-7050	1	Cap-Reservoir
2	92-2379	3	Clamp-Hose
3	3274-55	5	Screw-HSBH
4	340-9	2	Fitting-STR
4:1	237-58	1	O-Ring
4:2	237-81	1	O-Ring
5	121-5554	2	Seal-Foam
6	110-5310-01	2	Bracket-Mounting
7	110-5276	2	Seal-Foam
8	104-8300	10	Nut-HF, NI
9	2412-3	4	Clamp-Hose
10	120-3840	1	Oil Cooler And Radiator ASM
10:1	281-13	1	Plug-Pipe
10:2	304-46	1	Draincock
10:3	93-5957	1	Cap-Radiator
10:4	106-6755	1	Decal-Cap, Radiator
11	120-3815-03	1	Frame-Radiator
12	3234-30	14	Screw-HHF

Ref.	Part Number	Qty.	Description
13	121-5568-03	1	Braket-Resevoir
14	133-2994	1	Hose-Formed
15	121-5558	1	Hose-Radiator, Lower
16	125-2901	1	Shroud-Fan, Turbo Diesel
17	3269-15	2	Rivet-Pop
18	3234-5	5	Screw-HHF
19	115-1554	1	Latch-Draw
20	32104-32	6	Screw-HWH
21	121-5575	2	Seal-Foam
22	121-5576	1	Seal-Foam
23	120-3844-03	1	Screen
24	93-6028	1	Plate-Logo
25	94-2638	4	Nut-Flat
26	115-1556	1	Pin-Ball, Detent
27	110-8752	1	Hose-Fuel
28	110-0969	2	Seal-Foam
29	125-2905	1	Cap-Shroud, Diesel
30	125-8767	2	Seal-Foam
31	93-7272	1	Decal-Warning
32	110-3257	1	Hose-Fuel

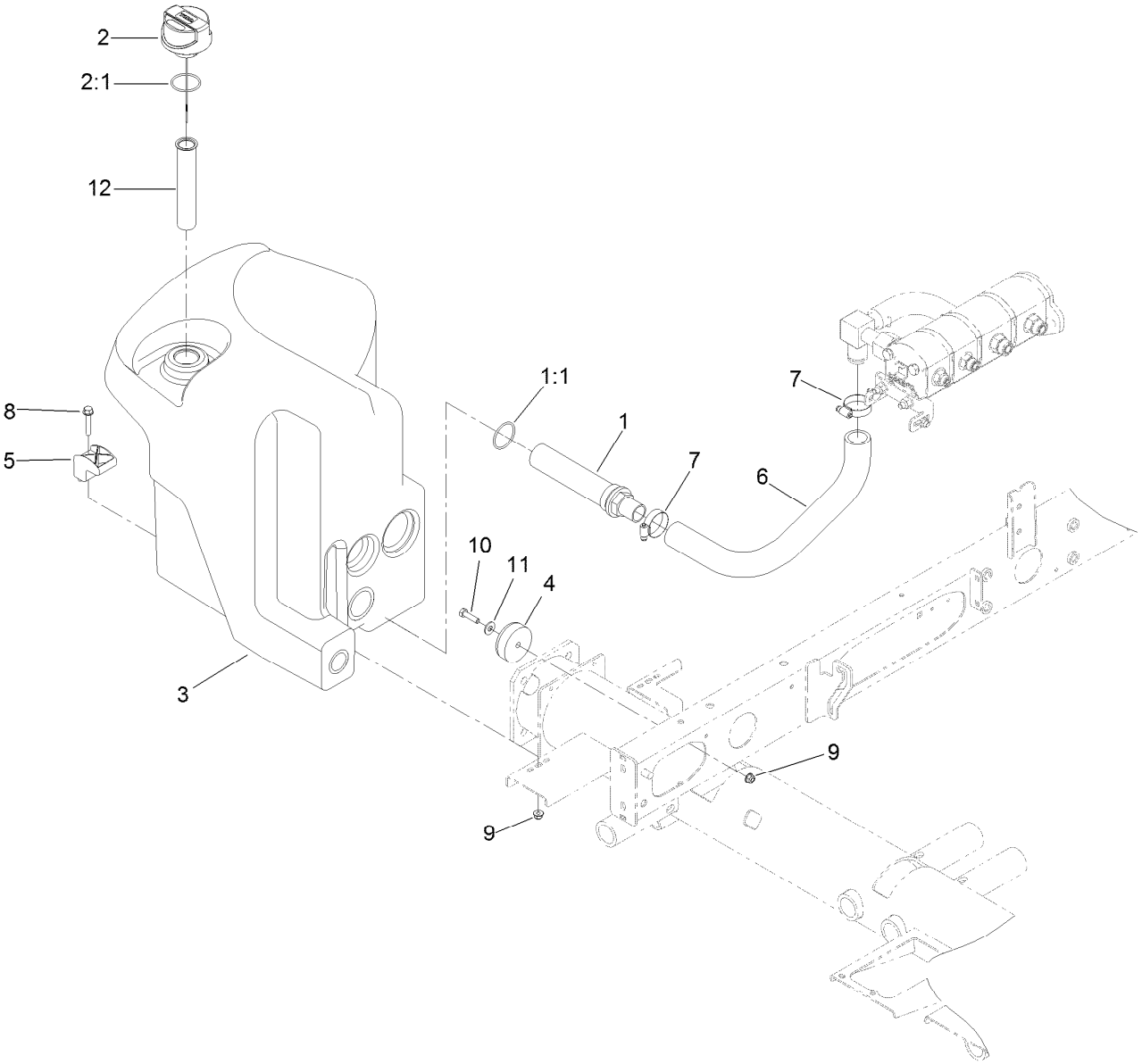

Hydraulic Tank Assembly

Ref.	Part Number	Qty.	Description
1	105-0131	1	Strainer-Tank, Oil
1:1	340-136	1	O-Ring
2	117-0193	1	Cap-Hydraulic, Vented Breather
2:1	237-101	1	O-Ring
3	121-5587	1	Tank-Hydraulic
4	108-1605	1	Bumper-Recess
5	107-4543	2	Clamp
6	108-1685	1	Hose-Formed
7	2412-3	2	Clamp-Hose
8	94-5780	2	Screw-HWH
9	104-8300	3	Nut-HF, NI
10	322-6	1	Screw-HH
11	3256-3	1	Washer-Flat
12	61-2790	1	Filter-Screen

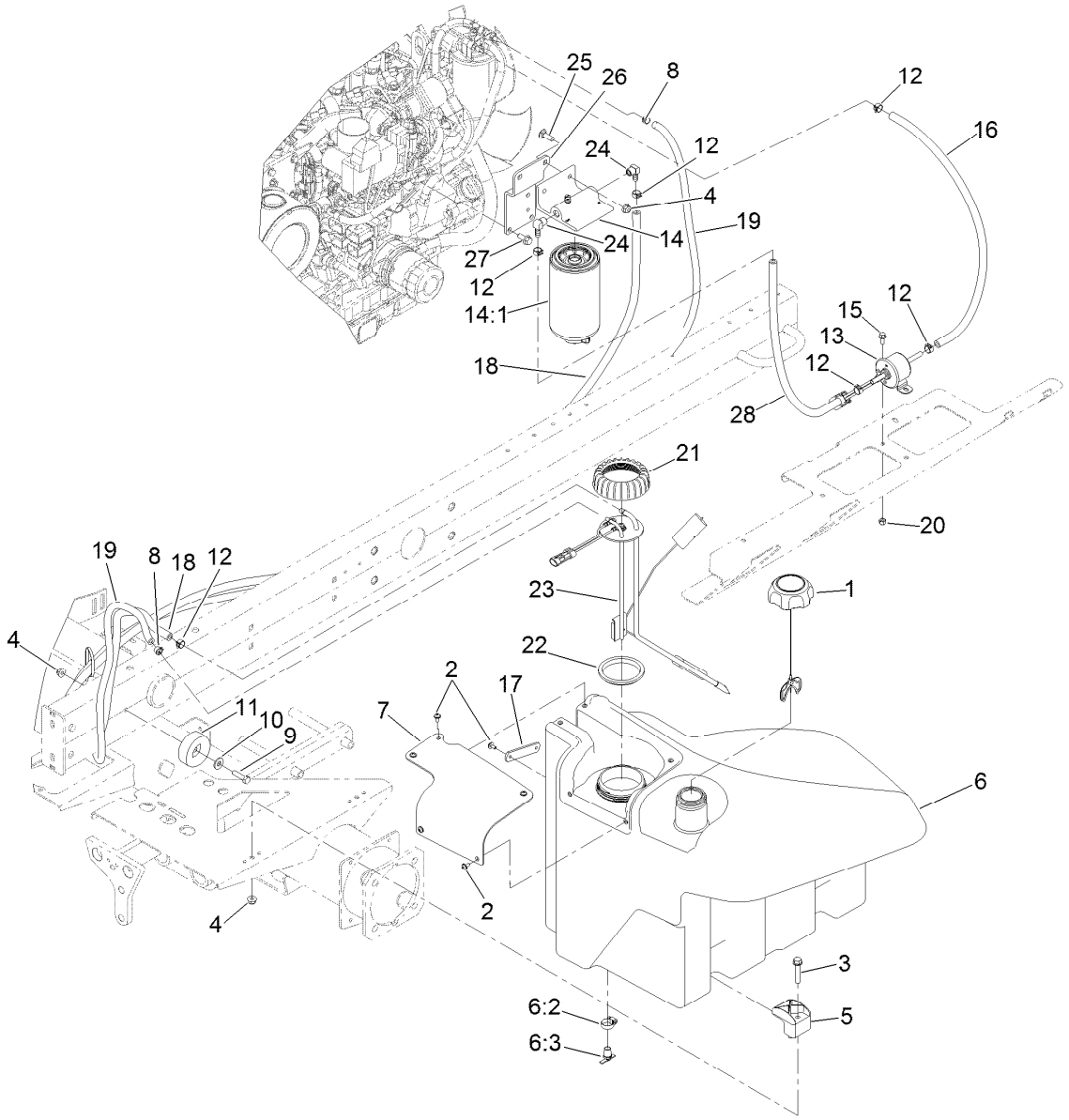

Fuel System Assembly

Ref.	Part Number	Qty.	Description
1	125-9173	1	Cap-Fuel, Diesel, Ultra Low Sulfur
2	109-2661	7	Screw-PPH
3	94-5780	2	Screw-HWH
4	104-8300	5	Nut-HF, NI
5	107-4543	2	Clamp
6	125-2907	1	Fuel Tank ASM
6:2	2412-36	1	Clamp-Hose
6:3	304-46	1	Draincock
7	125-2903	1	Cover-Pump/Sender
8	2412-98	2	Clamp-Hose
9	322-6	1	Screw-HH
10	3256-3	1	Washer-Flat
11	108-1605	1	Bumper-Recess
12	92-2379	6	Clamp-Hose
13	121-5613	1	Pump-Fuel, Electric

Ref.	Part Number	Qty.	Description
14	125-2914	1	Filter-Separator
14:1	125-2915	1	Filter-Fuel/Water Separator
15	3234-33	2	Screw-HHF
16	109-0308	1	Hose-Fuel
17	125-2945	1	Strap-Cable
18	121-5608	1	Hose-Fuel
19	121-5614	1	Hose-Fuel
20	3296-42	2	Nut-Lock, NI
21	115-2162	1	Cap-Pump, Fuel
22	115-2163	1	Gasket-Pump, Fuel
23	121-5642	1	Sender-Fuel
24	353-781	2	Fitting-HYD, 90
25	3230-22	2	Screw-CARR
26	120-6299-03	1	Bracket-Separator
27	33104-020	3	Screw-HHF
28	109-0274	1	Hose-Fuel

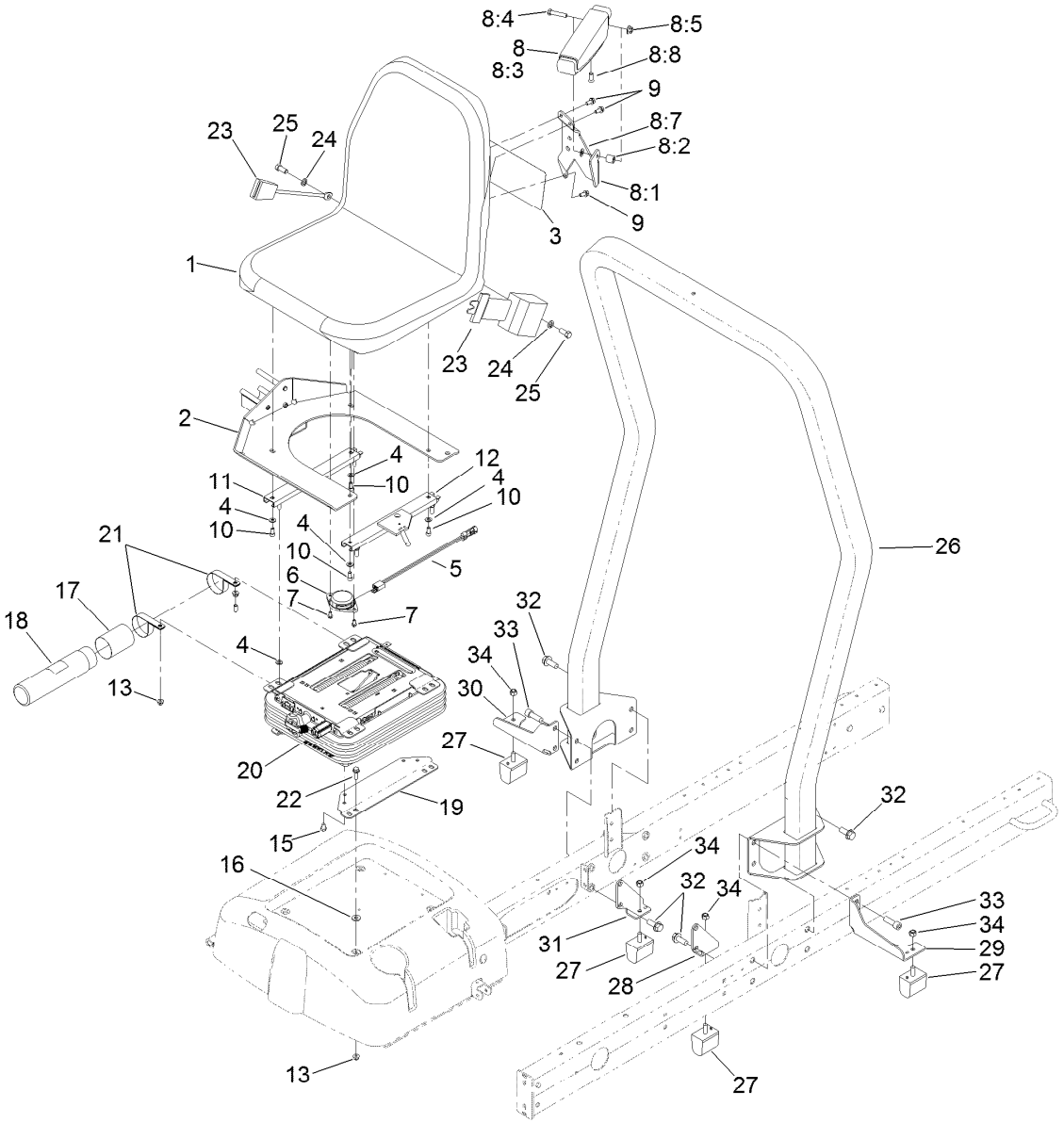

Seat Mount Assembly

Ref.	Part Number	Qty.	Description
1	104-4620	1	Seat
2	125-2900-03	1	Mount-Seat
3	125-2927	1	Decal-Service
3	133-2997	1	Decal-Service, Japanese
4	3256-23	8	Washer-Plain
5	108-8657	1	Harness-Wire, Seat
6	92-6282	1	Switch-Seat
7	9266714	2	Screw-HWH
8	92-7307	1	LH Armrest ASM
8:1	69-0760	1	Bracket-Arm, LH
8:2	92-7301	1	Spacer
8:3	69-1180	1	Armrest
8:4	323-9	1	Screw-HH
8:5	32128-19	1	Nut-HF Lock,Large Flg
8:7	3256-24	1	Washer-Flat
8:8	92-7318	1	Screw
9	3234-14	3	Screw-HHF
10	3274-12	4	Screw-HSH
11	92-8990	1	Adjuster-Seat, Non-Locking
12	92-8991	1	Adjuster (W/Latch)
13	104-8300	8	Nut-HF, NI

Ref.	Part Number	Qty.	Description
15	48-7680	4	Screw-HH
16	71-9310	4	Spacer
17	104-7048	1	Cap-Housing
18	104-7050	1	Tube-Manual
19	108-6590-03	2	Bracket-Seat, Lower
20	110-8851	1	Mechanical Suspension ASM
21	2412-133	2	Clamp-R
22	3234-17	4	Screw-HHF
23	100-4928	1	Belt-Seat
24	3253-6	2	Washer-Lock
25	3212-4	2	Screw-HH
26	136-7954	1	ROPS ASM
27	87-3470	4	Bumper
28	117-0183-03	1	Bracket-Bumper, LH
29	117-0184-03	1	Bracket-Bumper, LH
30	117-0233-03	1	Bracket-Bumper, RH
31	117-0234-03	1	Bracket-Bumper, RH
32	3234-38	8	Screw-HHF
33	3274-4	4	Screw-HSH
34	33025-00	4	Nut-Lock, NI

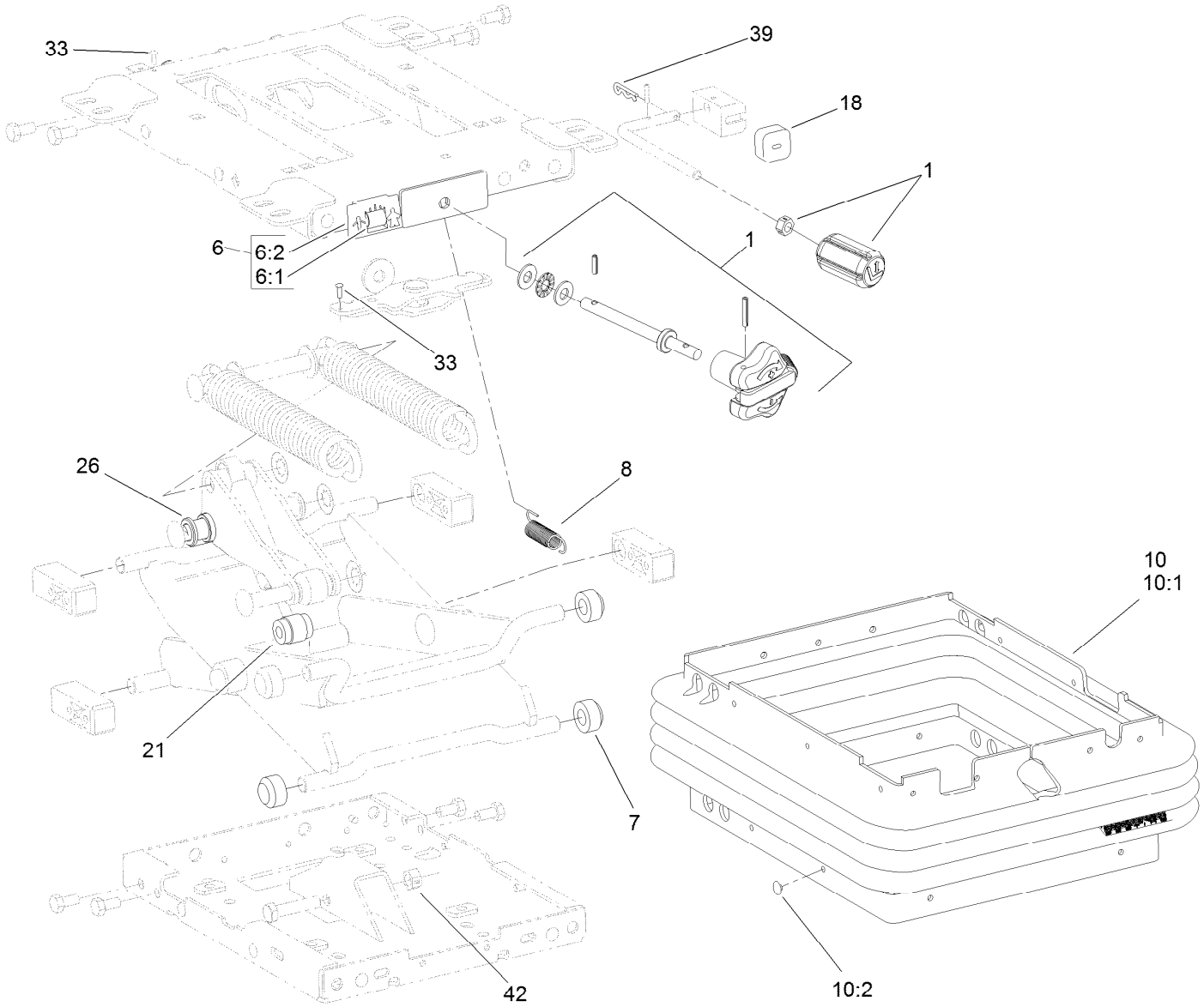

Mechanical Seat Suspension Assembly No. 110-8851

Ref.	*Part Number*	*Qty.*	*Description*
1	119-8040	1	Knobs Service Kit
6	108-4584	1	Weight Indicator Service Kit
6:1		1	Tape-Weight Adjust ●
6:2		1	Guide-Weight Adjust ●
7	108-9632	4	Roller
8	108-9633	1	Spring-Extension
10	112-0164	1	Boot Kit
10:1		1	Boot-Suspension ●
10:2	108-9641	21	Clip-Plug
18	108-9634	1	Bumper
21	108-9614	1	Damper
26	108-9622	2	Tube
33	3290-54	2	Rivet-Blind
39	3272-9	1	Pin-Cotter
42	32152-2	1	Nut-Lock, Cone

● Not serviced separately

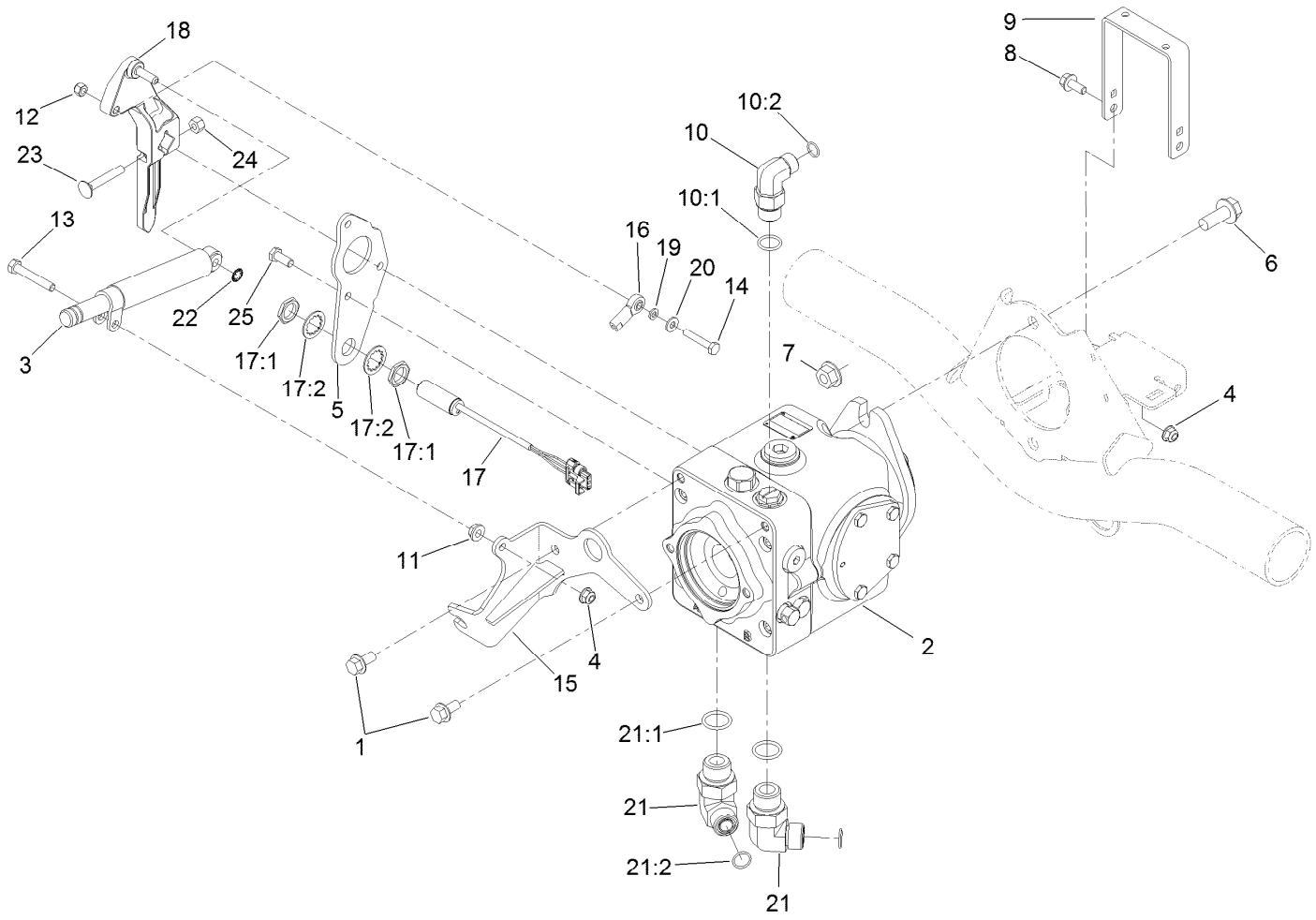

Traction Pump Assembly

Ref.	Part Number	Qty.	Description
1	3234-1	2	Screw-HHF
2	119-6972	1	Variable Hydraulic Pump ASM
3	76-8870	1	Damper-Lever
4	104-8300	3	Nut-HF, NI
5	125-8822-03	1	Plate-Pump
6	3234-38	2	Screw-HHF
7	32128-49	2	Nut-HHF
8	3234-5	2	Screw-HHF
9	108-1799-03	1	Hoop-Guard
10	340-105	1	Fitting-Elbow, 90 DEG
10:1	237-80	1	O-Ring
10:2	237-30	1	O-Ring
11	32128-20	1	Nut-HF
12	3296-42	1	Nut-Lock, NI
13	322-10	1	Screw-HH

Ref.	Part Number	Qty.	Description
14	321-9	1	Screw-HH
15	127-2356-03	1	Bracket-Cable
16	2411-41	1	Rod End-Ball Joint
17	115-5300	1	Proximity Switch ASM
17:1	117-3207	2	Nut-Hex
17:2	117-3208	2	Washer-Lock, Internal Tooth
18	117-0265	1	Lever-Pump
19	33093-00	1	Washer-Flat
20	3256-22	1	Washer-Flat
21	340-139	2	Fitting-Elbow 90
21:1	237-81	1	O-Ring
21:2	237-65	1	O-Ring
22	32151-72	1	Ring-Retaining
23	3230-6	1	Bolt-CARR
24	3296-29	1	Nut-Lock, NI
25	33114-020	3	Screw-HH

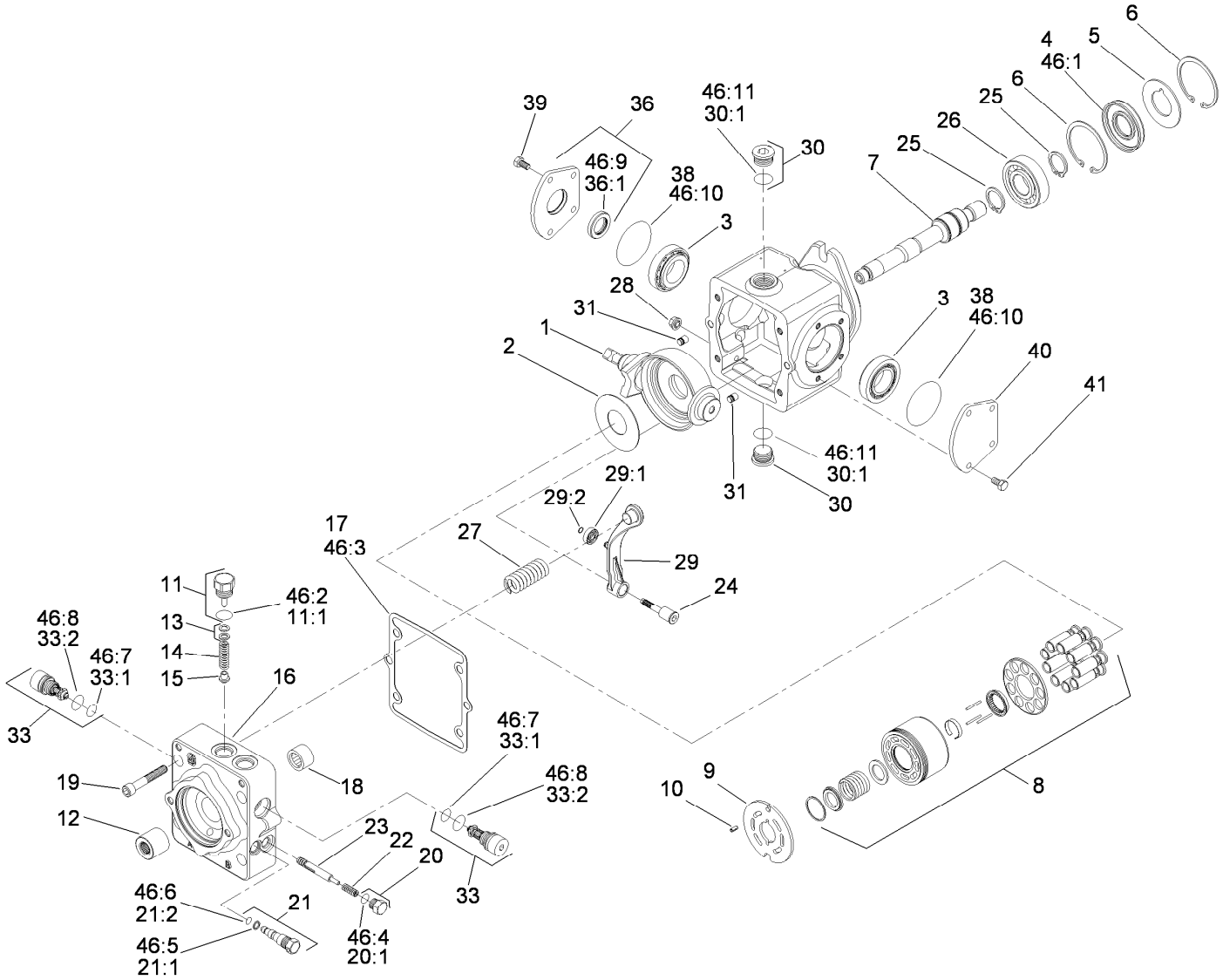

Hydraulic Pump Assembly No. 119-6972

Ref.	Part Number	Qty.	Description
1	115-8092	1	Swashplate
2	75-0400	1	Plate-Thrust
3	110-6483	2	Bearing Kit
4	110-6471	1	Seal-Lip
5	95-4400	1	Washer-Backup
6	69-3200	2	Ring-Retaining
7	110-6484	1	Shaft-Auxiliary
8	110-6472	1	Cylinder Block Kit ASM
9	110-6473	1	Plate-Valve (Clockwise)
10	110-6485	1	Pin-Slotted
11	110-6486	1	Plug-Relief, Charge
11:1	28-3570	1	O-Ring
12	110-6480	1	Coupling
13	92-1353	1	Shim Kit
14	110-6474	1	Spring
15	110-6475	1	Poppet
16	115-8087	1	Cap-End
17	110-6476	1	Gasket-Cap, End

Ref.	Part Number	Qty.	Description
18	75-0500	1	Bearing-Needle
19	110-6489	4	Screw
20	94-9415	2	Plug ASM
20:1		1	O-Ring ■
21	107-4364	1	Bypass Valve ASM
21:1	25-2630	1	Ring-Back Up
21:2	110-6498	1	O-Ring
22	110-6491	2	Spring
23	110-6492	1	Spool-Loop, Flush
24	110-6493	1	Pivot-Return, Neutral
25	69-3170	2	Ring-Retaining
26	75-0460	1	Bearing-Ball
27	115-8085	1	Spring-Neutral Return
28	110-6496	1	Nut-Seal
29	110-6497	1	Neutral Return Arm ASM
29:1	110-6494	1	Bearing-Cam
29:2	110-3056	1	Ring-Retaining
30	69-3130	2	Plug

● Not illustrated

■ Not serviced separately

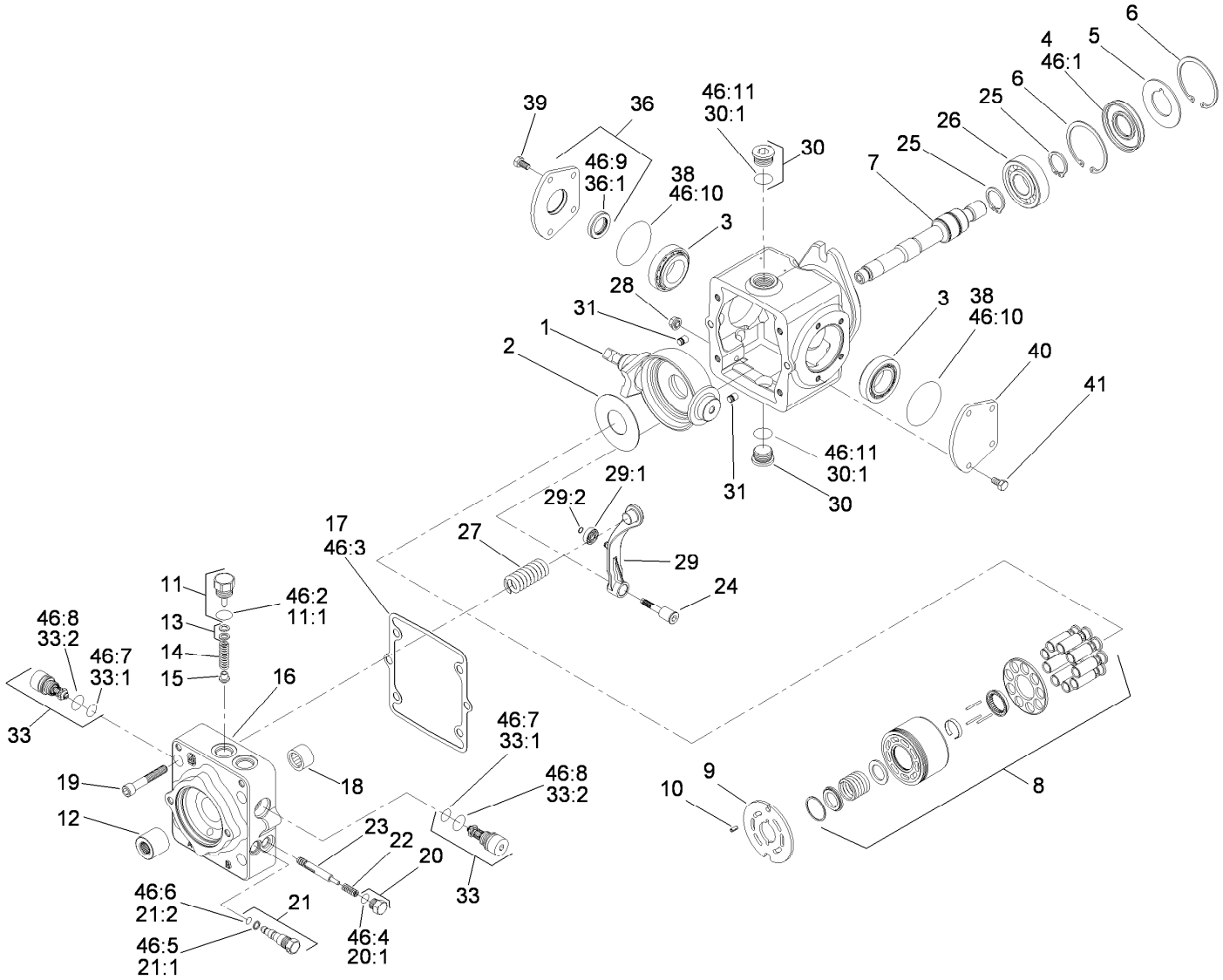

Hydraulic Pump Assembly No. 119-6972 (continued)

Ref.	Part Number	Qty.	Description
30:1		1	O-Ring ■
31	112-0158	2	Pin
33	110-6477	2	Valve-Relief
33:1	75-0240	1	O-Ring
33:2	84-0560	1	O-Ring
36	110-6499	1	Trunnion Cover ASM
36:1	110-6478	1	Seal-Lip
38	84-0430	2	O-Ring
39	112-0150	4	Screw
40	84-0440	1	Cover-Trunnion
41	112-0151	4	Screw
46	110-6481	1	Seal Kit ●

Ref.	Part Number	Qty.	Description
46:1	110-6471	1	Seal-Lip
46:2	28-3570	1	O-Ring
46:3	110-6476	1	Gasket-Cap, End
46:4		1	O-Ring ■
46:5	25-2630	1	Ring-Back Up
46:6	110-6498	1	O-Ring
46:7	75-0240	2	O-Ring
46:8	84-0560	2	O-Ring
46:9	110-6478	1	Seal-Lip
46:10	84-0430	2	O-Ring
46:11		2	O-Ring ■

● Not illustrated

■ Not serviced separately

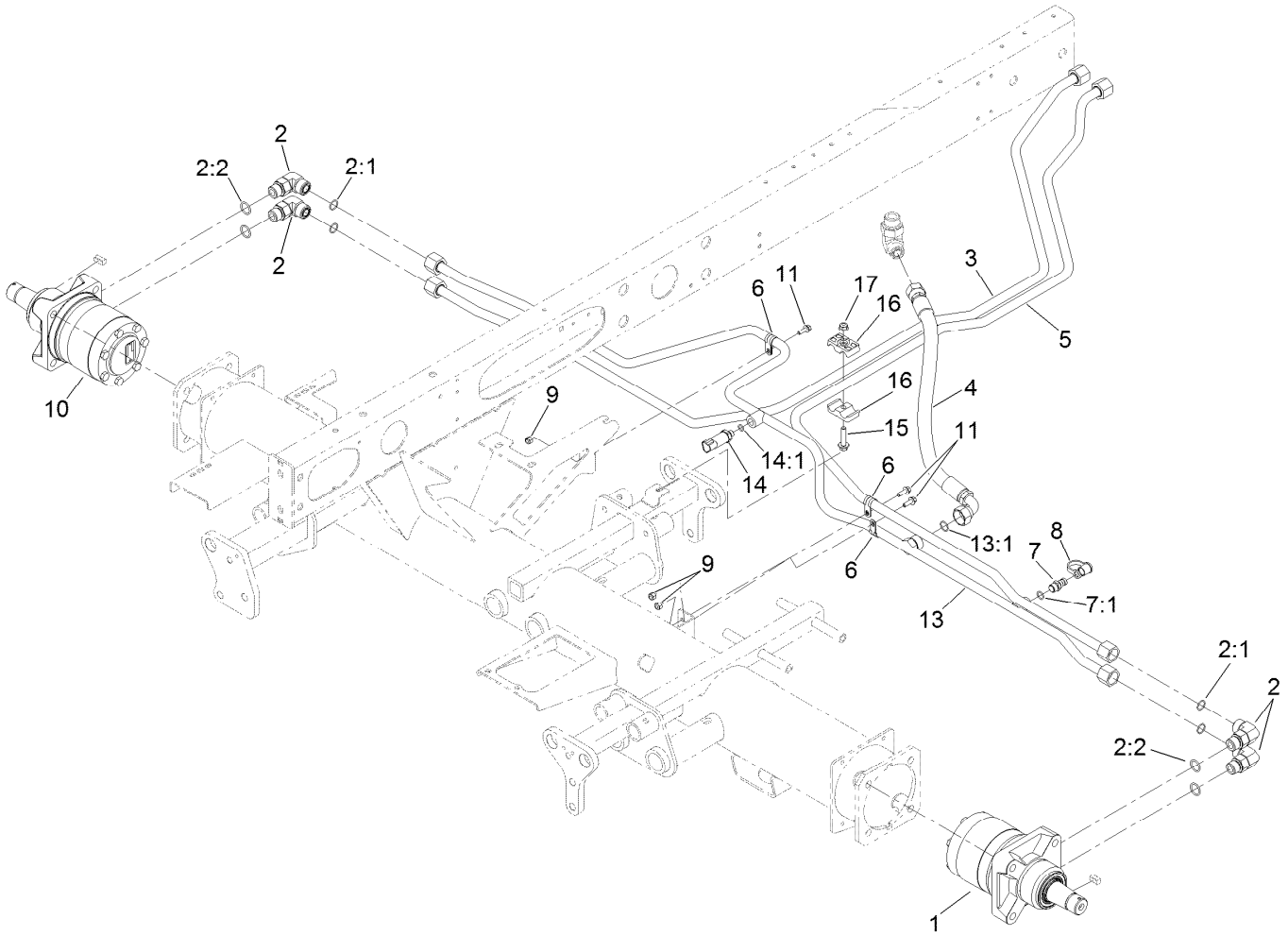

Traction Hydraulic Circuit

Ref.	Part Number	Qty.	Description
1	133-2935	1	Hydraulic Motor ASM
2	340-17	4	Fitting-Elbow, 90 DEG
2:1	237-65	1	O-Ring
2:2	237-80	1	O-Ring
3	114-0425	1	Hydraulic Tube ASM
4	108-1679	1	Hose-HYD
5	114-0424	1	Hydraulic Tube ASM
6	2412-134	3	Clamp-R
7	59-7410	1	Fitting-Diagnostic
7:1	237-42	1	O-Ring
8	354-79	1	Cap-Dust

Ref.	Part Number	Qty.	Description
9	3296-42	3	Nut-Lock, NI
10	133-2934	1	Hydraulic Motor ASM
11	3234-4	3	Screw-HHF
13	114-0389	1	Hydraulic Tube ASM
13:1	237-65	1	O-Ring
14	119-0011	1	Pressure Transducer ASM
14:1	237-78	1	O-Ring
15	115-1794	1	Screw-HHF
16	56-7971	2	Clamp-Tube
17	104-8300	1	Nut-HF, NI

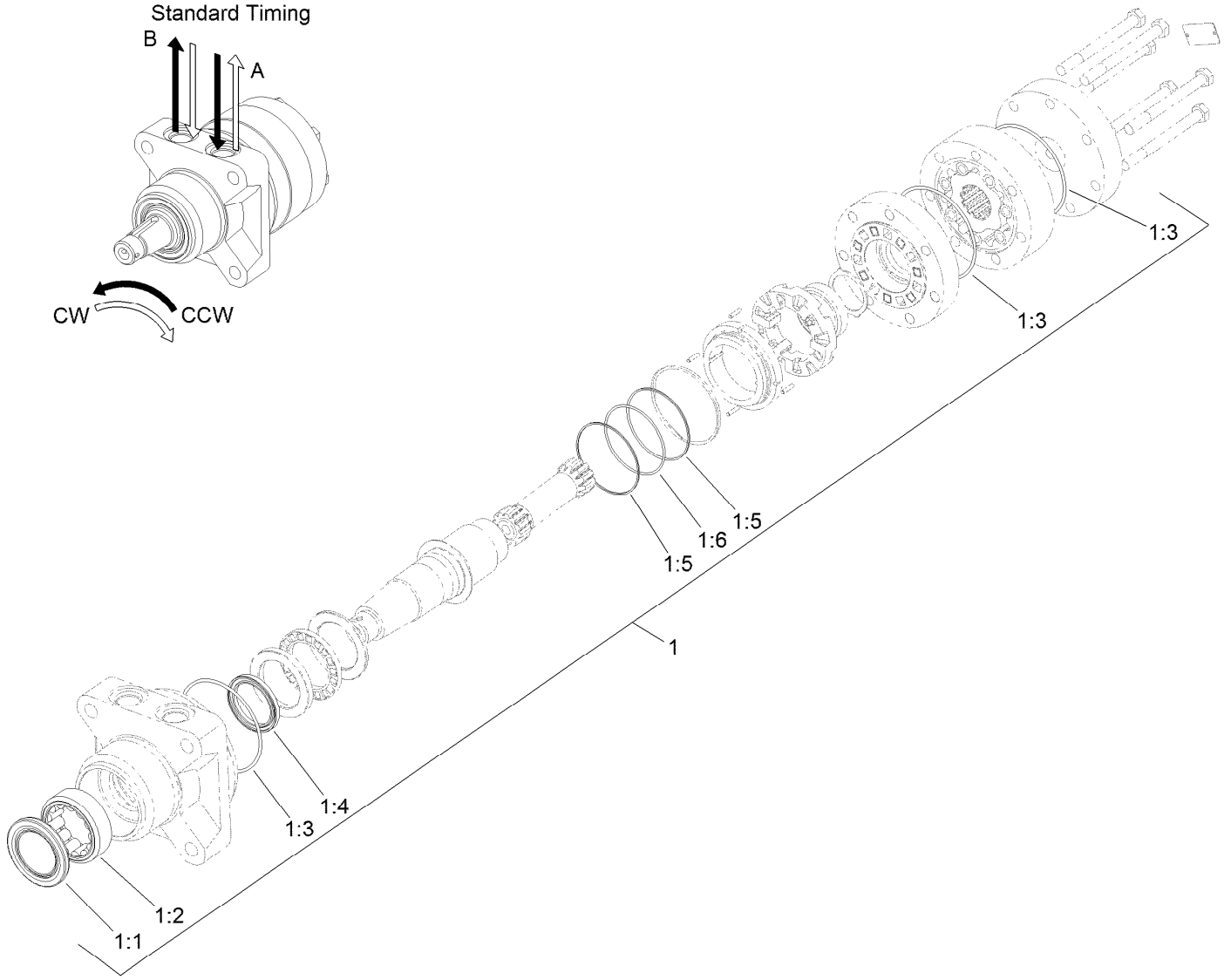

Hydraulic Motor Assembly No. 133-2935 (CCW)

Ref.	*Part Number*	*Qty.*	*Description*
1	120-6268	1	Seal Kit
1:1		1	Seal-Grease ●
1:2		1	Shell-Bearing ●
1:3		3	O-Ring ●
1:4		1	Seal-Shaft ●
1:5		2	Ring-Back Up ●
1:6		1	O-Ring ●

● Not serviced separately

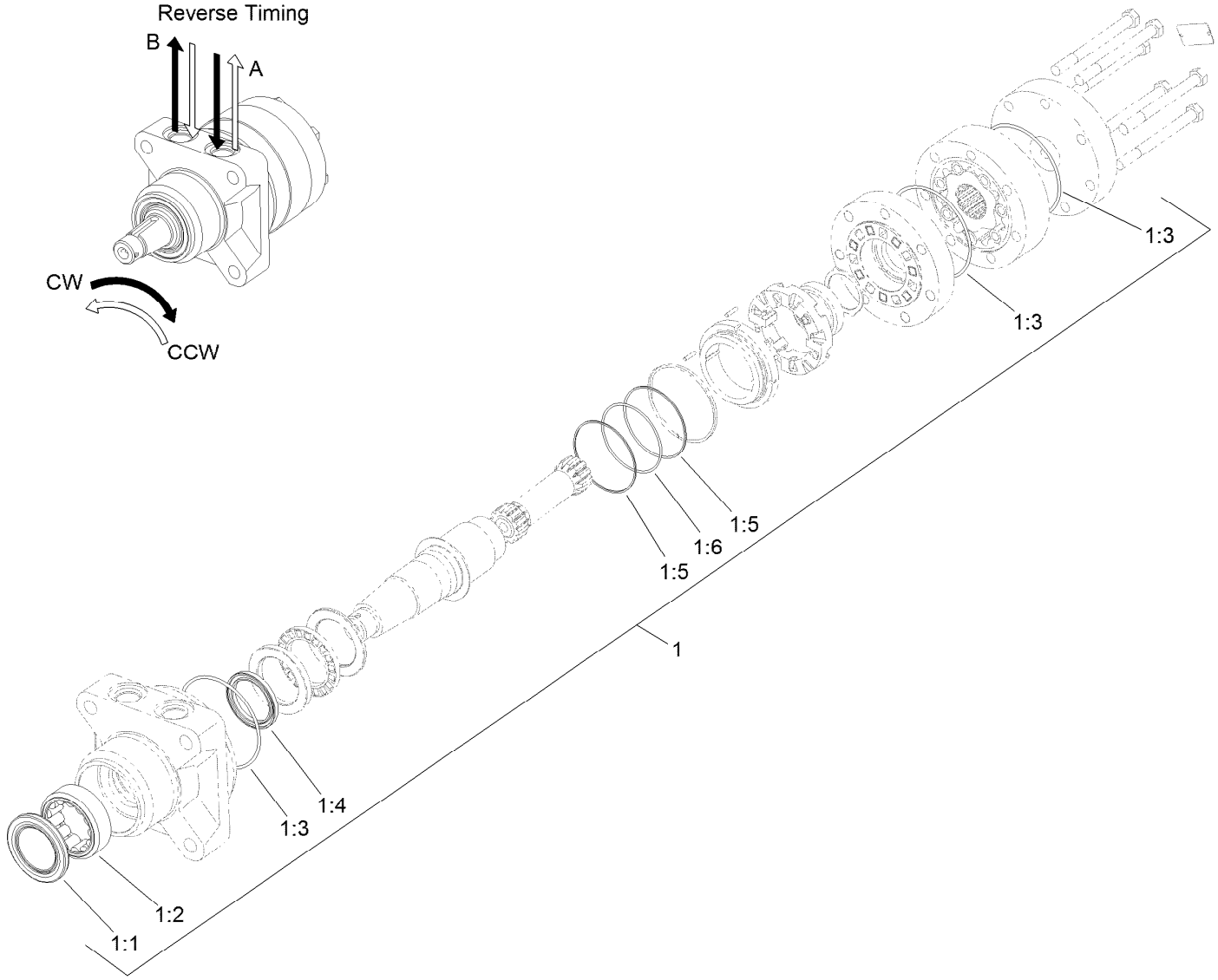

Hydraulic Motor Assembly No. 133-2934 (CW)

Ref.	*Part Number*	*Qty.*	*Description*
1	120-6268	1	Seal Kit
1:1		1	Seal-Grease ●
1:2		1	Shell-Bearing ●
1:3		3	O-Ring ●
1:4		1	Seal-Shaft ●
1:5		2	Ring-Back Up ●
1:6		1	O-Ring ●

● Not serviced separately

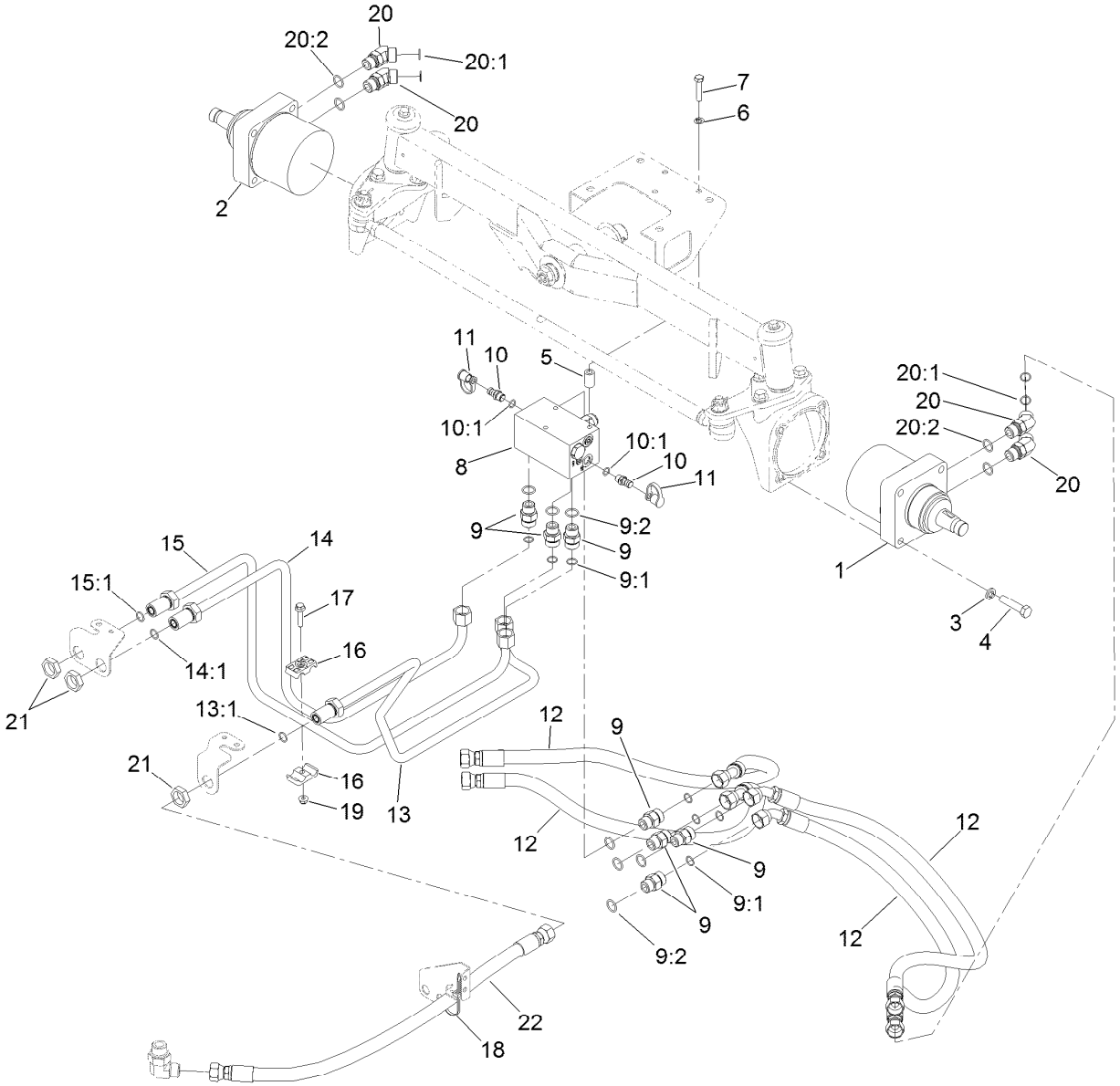

Rear Traction Hydraulic Circuit

Ref.	Part Number	Qty.	Description
1	107-4544	1	HYD Motor ASM
2	110-0901	1	HYD Motor ASM
3	3253-7	8	Washer-Lock
4	325-9	8	Screw-HH
5	93-6981	3	Spacer
6	3253-21	3	Washer-Lock
7	323-9	3	Screw-HH
8	108-1825	1	HYD Manifold ASM
9	340-7	7	Fitting-Straight
9:1	237-65	1	O-Ring
9:2	237-80	1	O-Ring
10	59-7410	2	Fitting-Diagnostic
10:1	237-42	1	O-Ring
11	354-79	2	Cap-Dust
12	106-3662	4	Hose-HYD

Ref.	Part Number	Qty.	Description
13	108-7626	1	Tube ASM
13:1	237-65	1	O-Ring
14	108-7625	1	Tube ASM
14:1	237-65	1	O-Ring
15	108-7624	1	Tube ASM
15:1	237-65	1	O-Ring
16	56-7971	2	Clamp-Tube
17	94-5780	1	Screw-HWH
18	3290-378	1	Tie-Cable
19	104-8300	1	Nut-HF, NI
20	340-14	4	Fitting-HYD, 45 DEG
20:1	237-65	1	O-Ring
20:2	237-80	1	O-Ring
21	340-74	3	Nut-Lock, Bulkhead
22	108-7645	1	Hose-HYD

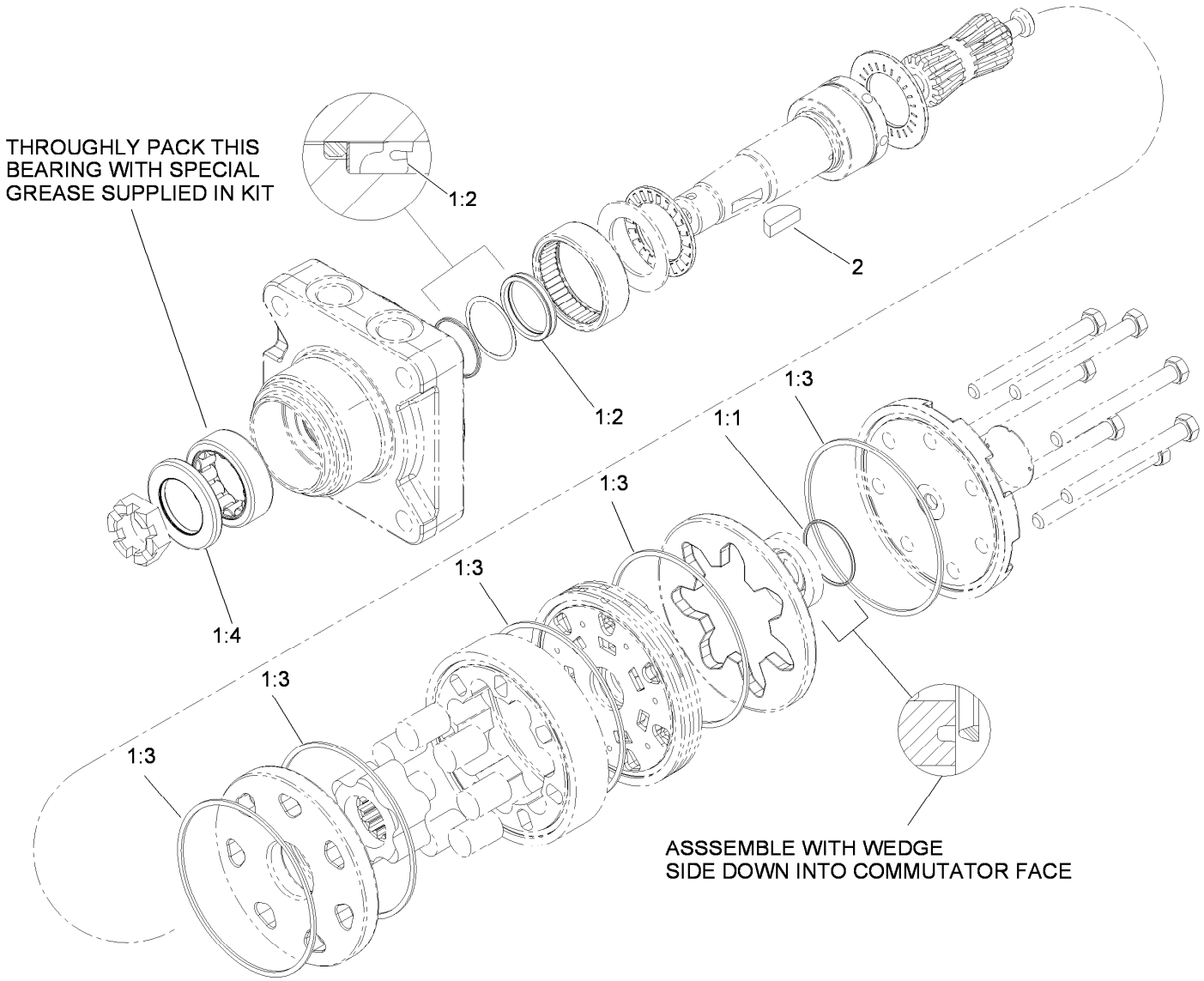

Hydraulic Motor Asembly No. 107-4544

Ref.	*Part Number*	*Qty.*	*Description*
1	110-8897	1	Seal Kit ●
1:1		1	Seal-Commutator, Vespel ■
1:2		1	Seal-Shaft ■
1:3		5	Seal-Body, Buna ■
1:4		1	Seal-Dirt / Water ■
2	3257-42	1	Key-Woodruff

● Not illustrated

■ Not serviced separately

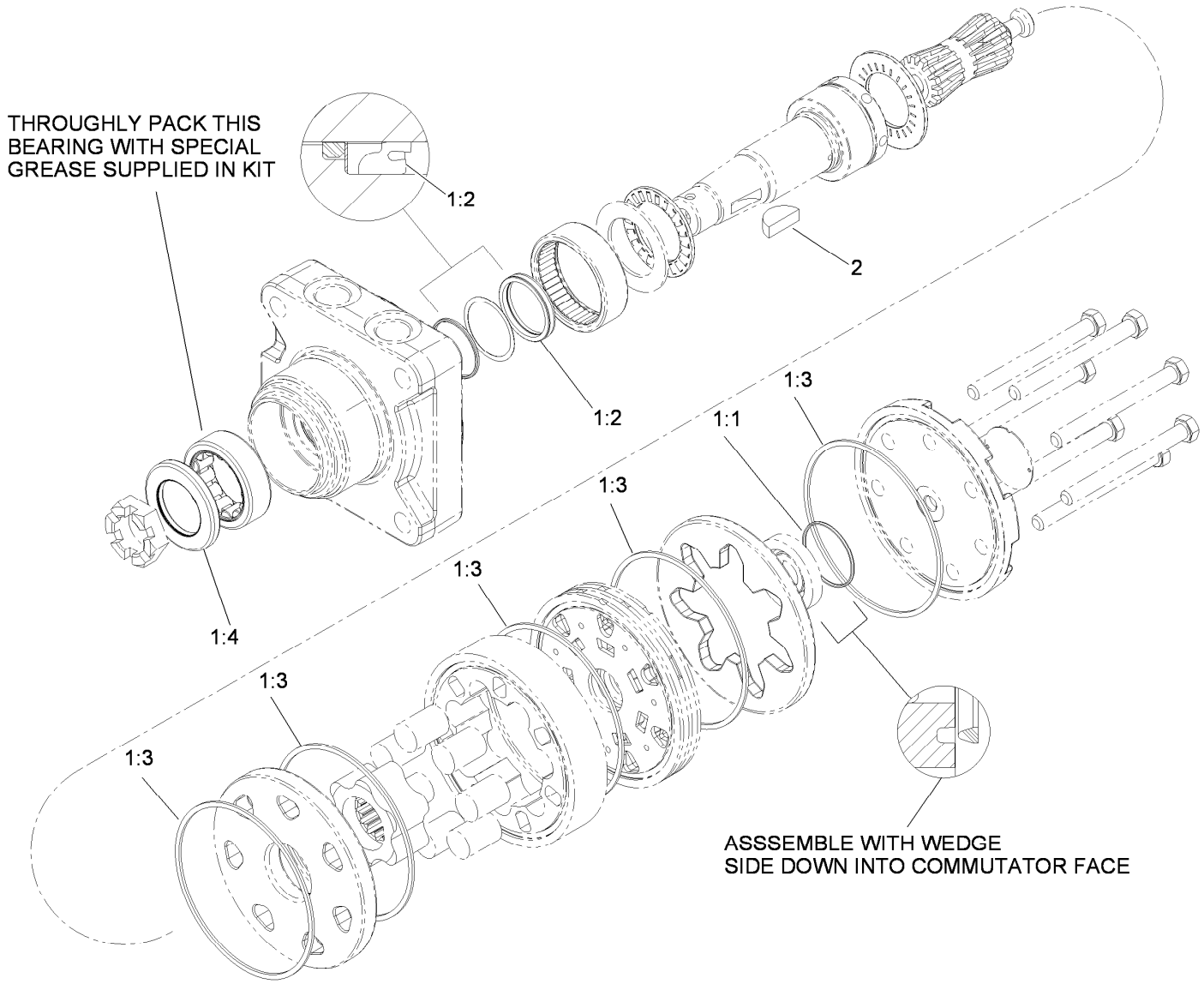

Hydraulic Motor Assembly No. 110-0901

Ref.	*Part Number*	*Qty.*	*Description*
1	110-8897	1	Seal Kit ●
1:1		1	Seal-Commutator, Vespel ■
1:2		1	Seal-Shaft ■
1:3		5	Seal-Body, Buna ■
1:4		1	Seal-Dirt / Water ■
2	3257-42	1	Key-Woodruff

● Not illustrated

■ Not serviced separately

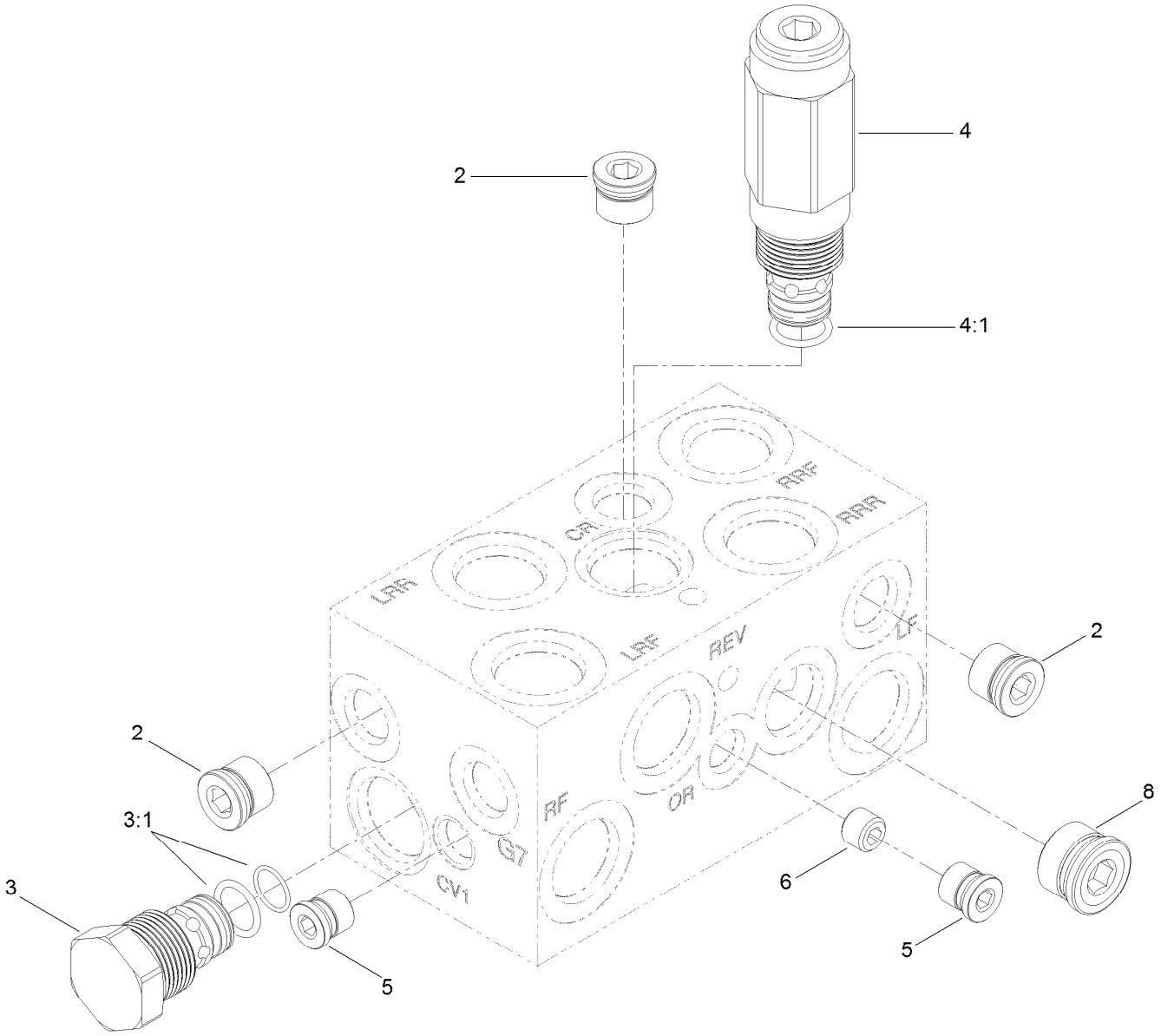

Four Wheel Drive Manifold Assembly No. 108-1825

Ref.	Part Number	Qty.	Description
2	106-1026	3	Plug-HYD
3	110-8881	2	Valve-Check
3:1	105-9159	1	Seal Kit ●
4	110-8882	1	Valve-Relief, Cross Over
4:1	110-6316	1	Seal Kit
5	106-1025	2	Plug-HYD
6	110-8883	1	Plug-Orifice (0.040)
8	106-1027	1	Plug

● Not illustrated

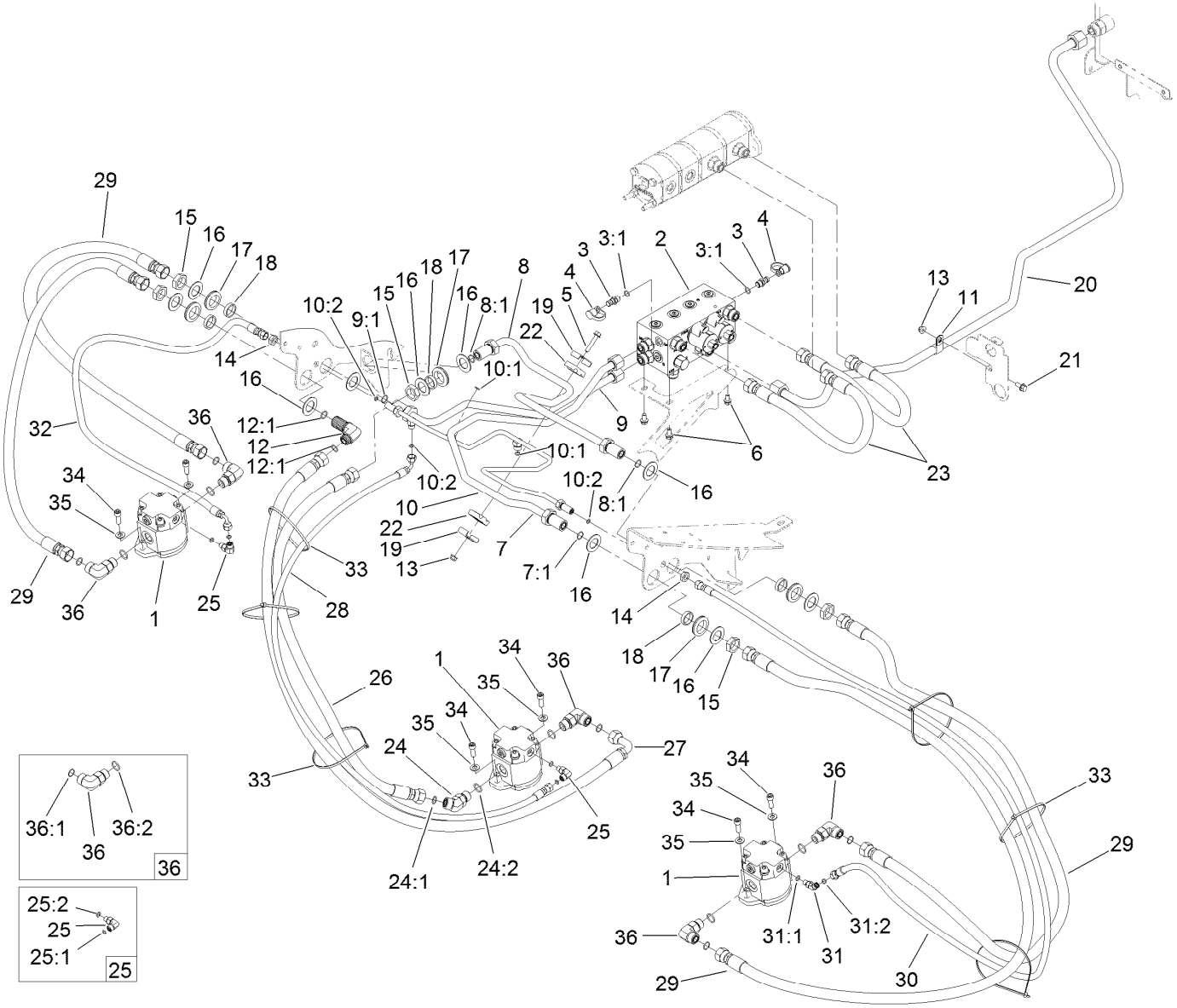

Deck No. 1, 4 and 5 Hydraulic Circuit Assembly

Ref.	Part Number	Qty.	Description
1	108-4004	3	Gear Motor ASM
2	114-0359	1	Deck Control Manifold ASM
3	59-7410	2	Fitting-Diagnostic
3:1	237-42	1	O-Ring
4	354-79	2	Cap-Dust
5	94-5780	1	Screw-HWH
6	3234-14	3	Screw-HHF
7	117-0138	1	Tube ASM
7:1	237-65	1	O-Ring
8	117-0137	1	Tube ASM
8:1	237-65	2	O-Ring
9	117-0139	1	Tube ASM
9:1	237-65	1	O-Ring
10	110-5286	1	Tube ASM
10:1	237-22	2	O-Ring
10:2	237-21	3	O-Ring
11	2412-4	1	Clamp-R
12	340-72	1	Fitting-Bulkhead, 90 DEG
12:1	237-65	2	O-Ring
13	104-8300	2	Nut-HF, NI
14	340-78	2	Nut-Lock

Ref.	Part Number	Qty.	Description
15	340-74	5	Nut-Lock, Bulkhead
16	69-9010	10	Washer
17	240-3	5	Grommet-Rubber
18	125-1984	5	Spacer
19	119-1419	2	Plate-Clamp
20	120-3769	1	Hydraulic Tube ASM
21	3234-5	1	Screw-HHF
22	56-7970	2	Clamp-Tube
23	108-1686	2	Hose-HYD
24	340-14	1	Fitting-HYD, 45 DEG
24:1	237-65	1	O-Ring
24:2	237-80	1	O-Ring
25	340-132	2	Fitting-Elbow, 90 DEG
25:1	237-78	1	O-Ring
25:2	237-21	1	O-Ring
26	117-0213	1	HYD Hose ASM
27	117-0211	1	HYD Hose ASM
28	117-0212	1	HYD Hose ASM
29	117-0299	4	HYD Hose ASM
30	104-9323	1	Hose-HYD
31	340-103	1	Fitting-HYD, 45 DEG

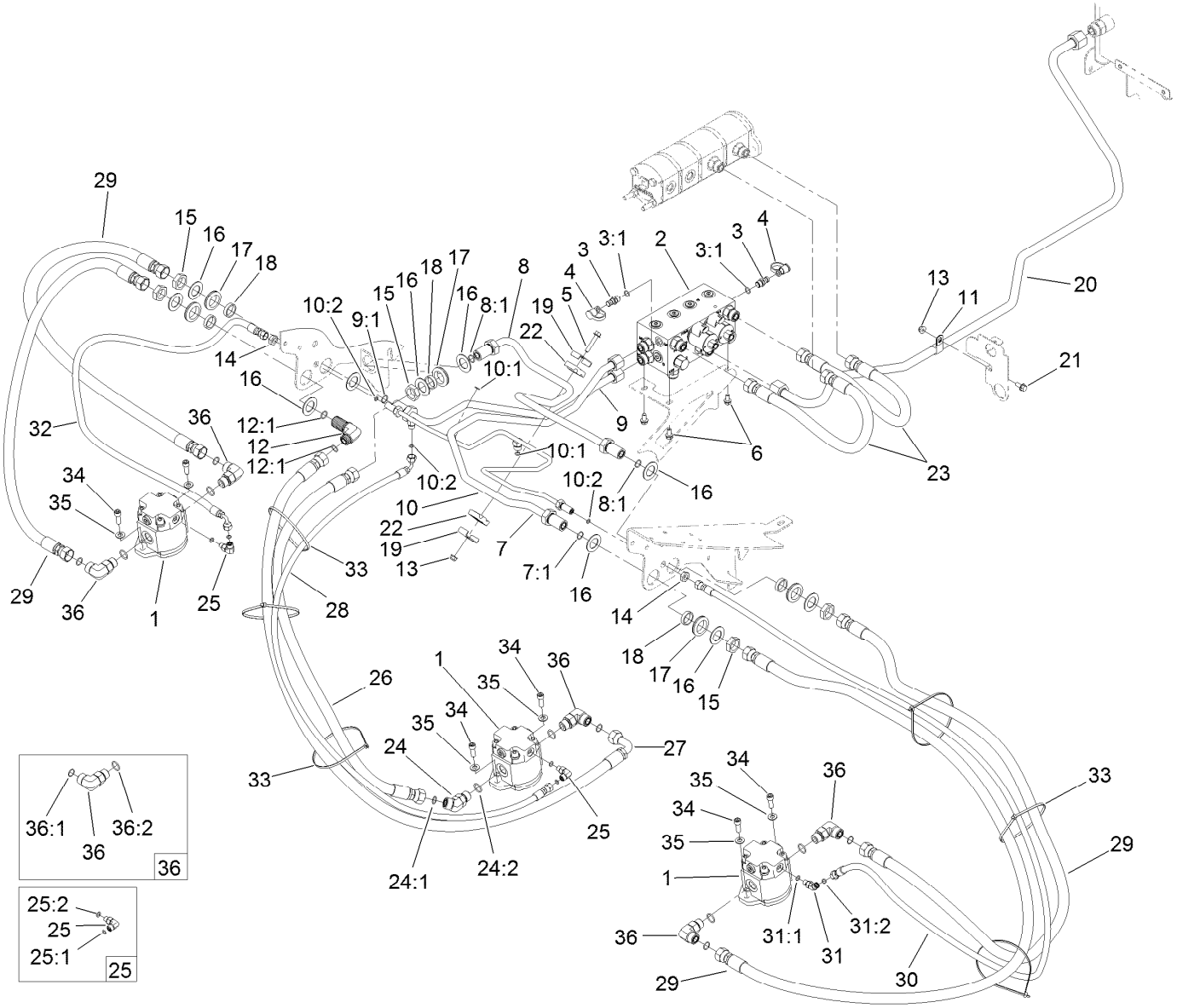

Deck No. 1, 4 and 5 Hydraulic Circuit Assembly (continued)

Ref.	Part Number	Qty.	Description
31:1	237-78	1	O-Ring
31:2	237-21	1	O-Ring
32	92-7638	1	Hose ASM
33	3334-945	9	Tie-Cable
34	3274-7	6	Screw-HSH
35	3256-24	6	Washer-Flat
36	340-17	5	Fitting-Elbow, 90 DEG
36:1	237-65	1	O-Ring
36:2	237-80	1	O-Ring

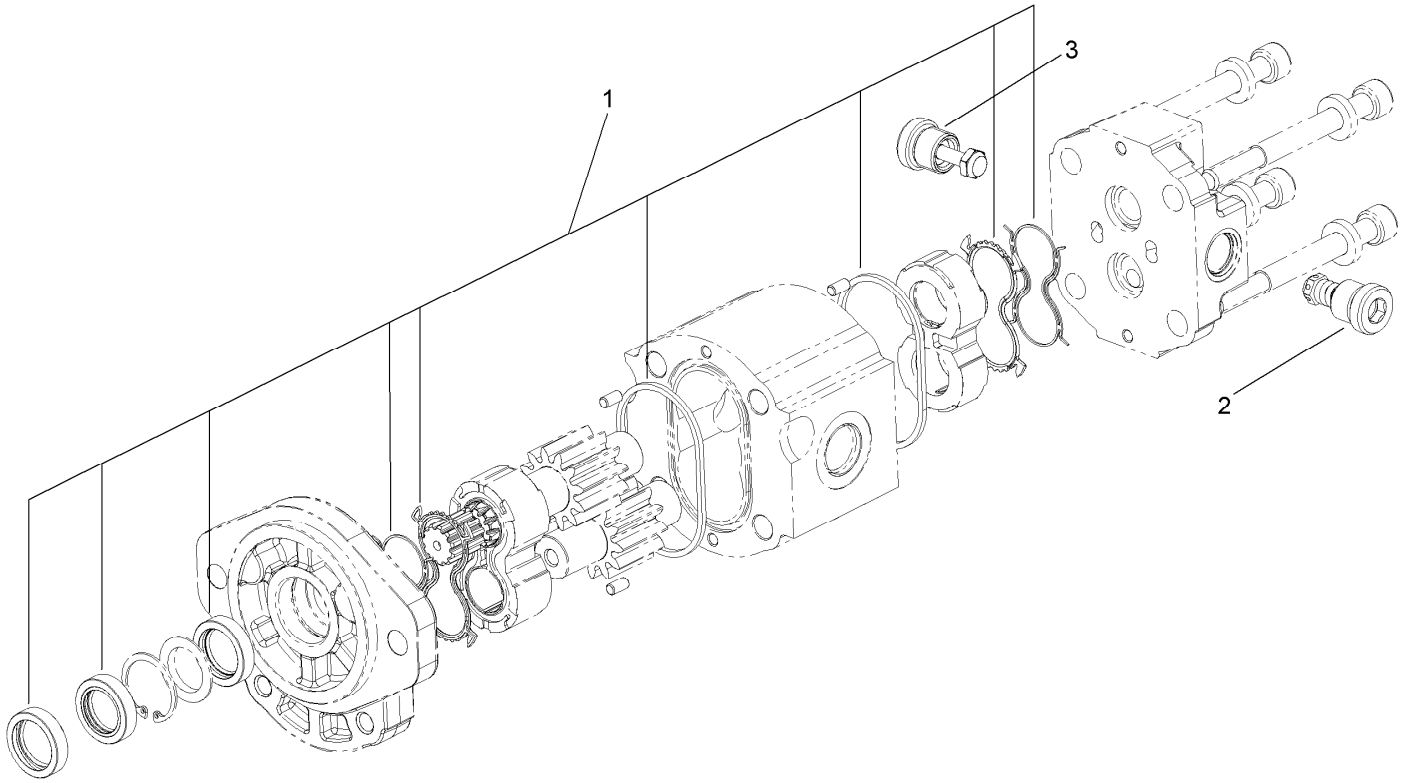

Gear Motor Assembly No. 108-4004

Ref.	*Part Number*	*Qty.*	*Description*
1	117-0235	1	Seal Kit
2	107-7820	1	Valve-Relief
3	107-7821	1	Valve-Anticavitation

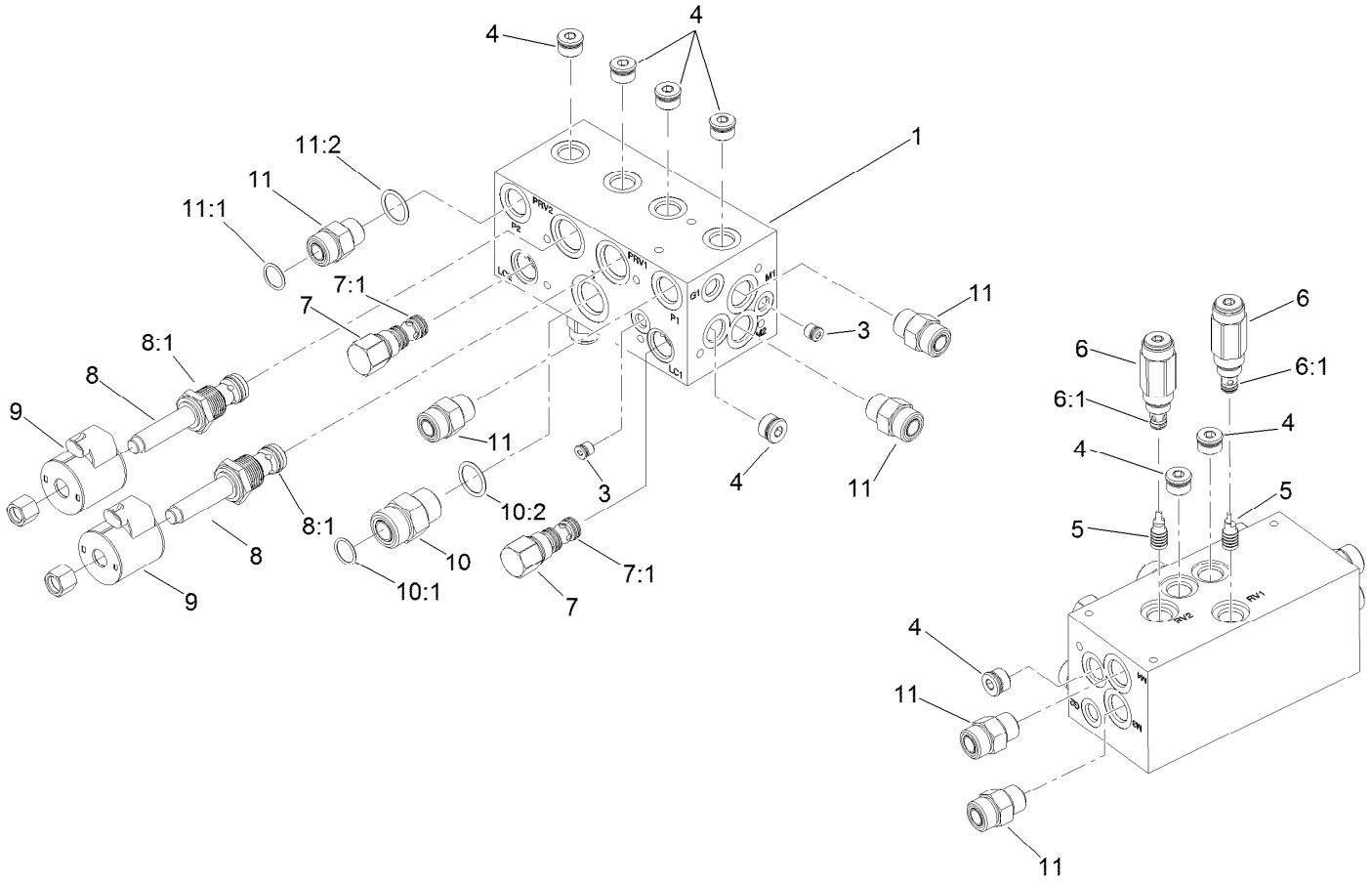

Deck Control Manifold Assembly No. 114-0359

Ref.	Part Number	Qty.	Description
1		1	Hydraulic Manifold ●
3	106-1025	2	Plug-HYD
4	106-1027	8	Plug
5	105-9157	2	Piston-Pilot
6	112-5259	2	Valve-Relief
6:1	105-9156	1	Seal Kit
7	105-9153	2	Element-Logic, Vented
7:1	119-2159	1	Seal Kit
8	117-0229	2	Valve-Relief, Proportional
8:1	117-1114	1	Seal Kit
9	110-6344	2	Coil-12V, DC
10	340-9	1	Fitting-STR
10:1	237-58	1	O-Ring
10:2	237-81	1	O-Ring
11	340-7	2	Fitting-Straight
11:1	237-65	1	O-Ring
11:2	237-80	1	O-Ring

● Not serviced separately

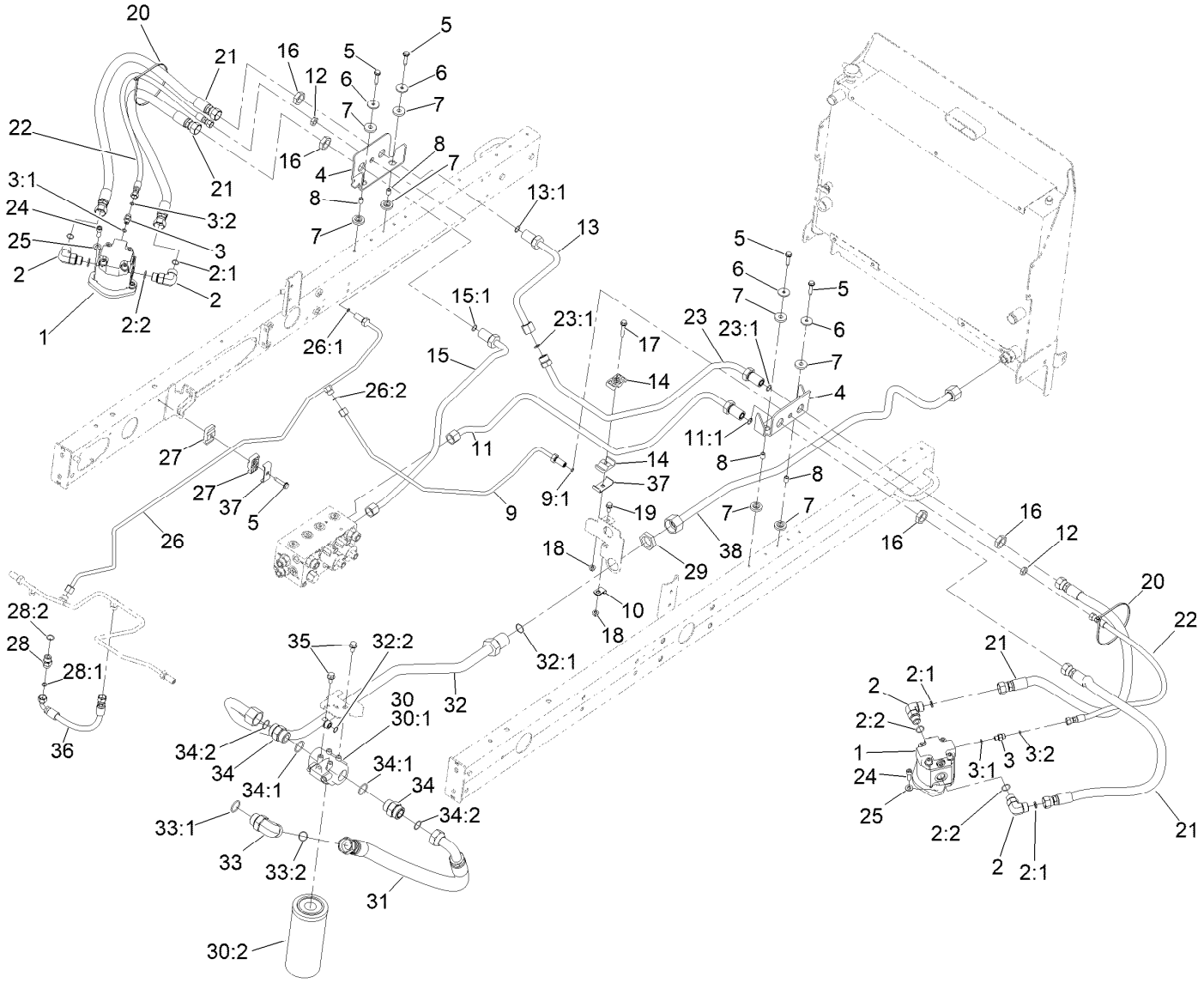

Deck No. 2 and 3 Hydraulic Circuit Assembly

Ref.	Part Number	Qty.	Description
1	108-4004	2	Gear Motor ASM
2	340-17	4	Fitting-Elbow, 90 DEG
2:1	237-65	1	O-Ring
2:2	237-80	1	O-Ring
3	340-92	2	Fitting-Straight
3:1	237-78	1	O-Ring
3:2	237-21	1	O-Ring
4	117-0174-03	2	Bracket-Bulkhead
5	32144-57	5	Screw
6	105-3048	4	Washer-Flat
7	240-11	8	Bushing-Flange
8	99-8611	4	Spacer
9	120-3772	1	HYD Tube ASM
9:1	237-21	1	O-Ring
10	2412-113	1	Clamp-R
11	120-3774	1	HYD Tube ASM
11:1	237-65	1	O-Ring
12	340-78	2	Nut-Lock
13	117-0140	1	Tube ASM
13:1	237-65	1	O-Ring
14	56-7971	2	Clamp-Tube

Ref.	Part Number	Qty.	Description
15	120-3773	1	Tube ASM HYD
15:1	237-65	1	O-Ring
16	340-74	4	Nut-Lock, Bulkhead
17	94-5780	1	Screw-HWH
18	104-8300	2	Nut-HF, NI
19	3234-5	1	Screw-HHF
20	3334-945	6	Tie-Cable
21	105-1215	4	Hose-HYD
22	108-6507	2	Hose-HYD
23	120-3775	1	HYD Tube ASM
23:1	237-65	2	O-Ring
24	3274-7	4	Screw-HSH
25	3256-24	4	Washer-Flat
26	120-3811	1	HYD Tube ASM
26:1	237-21	1	O-Ring
26:2	237-22	1	O-Ring
27	56-7972	2	Clamp-Tube
28	340-3	1	Fitting-Straight
28:1	237-22	1	O-Ring
28:2	237-79	1	O-Ring
29	340-128	1	Nut-Bulkhead

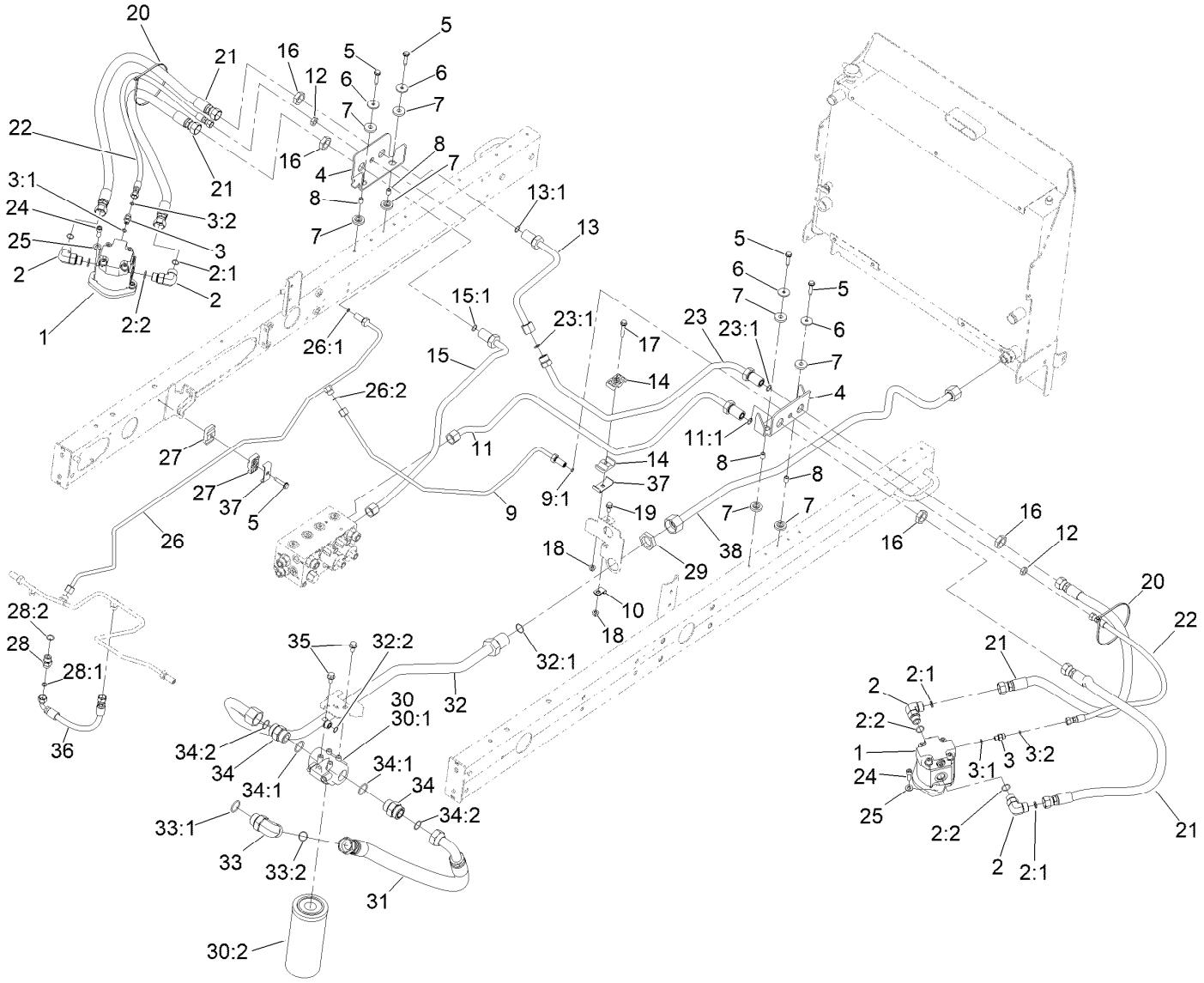

Deck No. 2 and 3 Hydraulic Circuit Assembly (continued)

Ref.	Part Number	Qty.	Description
30	98-3923	1	Oil Filter ASM
30:1	104-0080	1	Filter Head ASM
30:2	94-2621	1	Element-Filter
31	108-1689	1	Hose-HYD
32	108-1699	1	Tube ASM
32:1	340-65	1	O-Ring
32:2	237-30	1	O-Ring
33	340-129	1	Fitting-Elbow, 90 DEG
33:1	237-146	1	O-Ring
33:2	340-65	1	O-Ring
34	104-3797	2	Fitting-Straight
34:1	237-146	1	O-Ring
34:2	340-65	1	O-Ring
35	3234-1	2	Screw-HHF
36	66-8490	1	Hose-HYD
37	119-1419	3	Plate-Clamp
38	121-5600	1	HYD Tube ASM

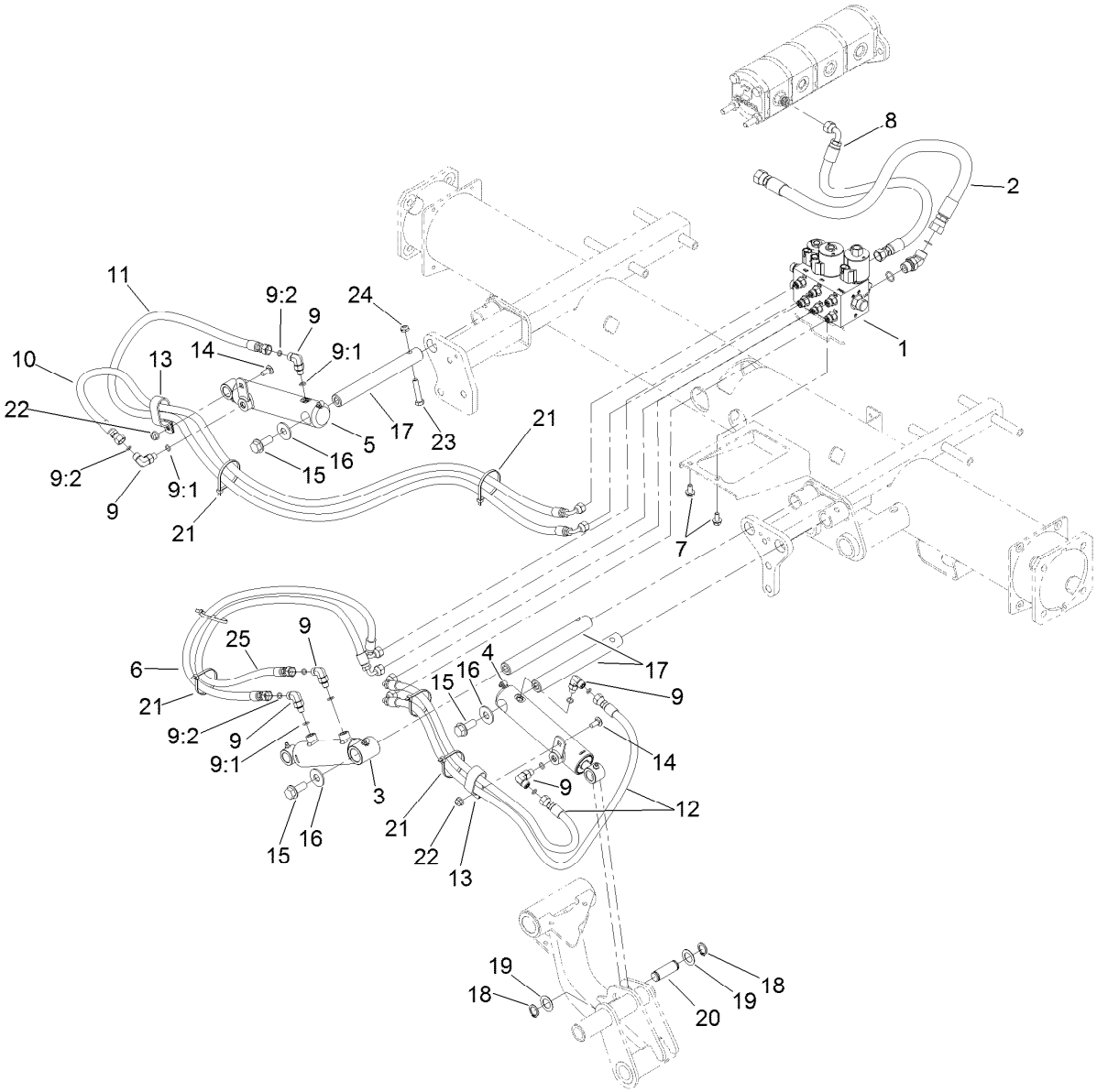

Deck No. 1, 4 and 5 Lift Circuit Hydraulic Assembly

Ref.	Part Number	Qty.	Description
1	117-0158	1	Lift Control Manifold ASM
2	117-0180	1	Hose-HYD
3	119-6989	1	HYD Cylinder ASM
4	119-6990	1	HYD Cylinder ASM
5	119-6991	1	HYD Cylinder ASM
6	117-0253	1	Hose-HYD
7	3234-14	2	Screw-HHF
8	92-5694	1	Hose-Hydraulic
9	340-132	6	Fitting-Elbow, 90 DEG
9:1	237-78	1	O-Ring
9:2	237-21	1	O-Ring
10	117-0262	1	Hose-HYD
11	117-0261	1	Hose-HYD
12	85-4940	2	Hose-HYD

Ref.	Part Number	Qty.	Description
13	2412-137	2	Clamp-R, Double
14	3230-23	2	Bolt-CARR
15	3234-38	3	Screw-HHF
16	3256-6	3	Washer-Flat
17	117-0148	3	Pin-Cylinder
18	32120-93	6	Ring-Retaining
19	3-6498	6	Washer-Thrust
20	104-0046	3	Pin-Slide, Cylinder
21	3290-379	6	Tie-Cable
22	104-8300	2	Nut-HF, NI
23	323-9	3	Screw-HH
24	3296-59	3	Nut-Lock, NI
25	117-0254	1	HP HYD Hose ASM

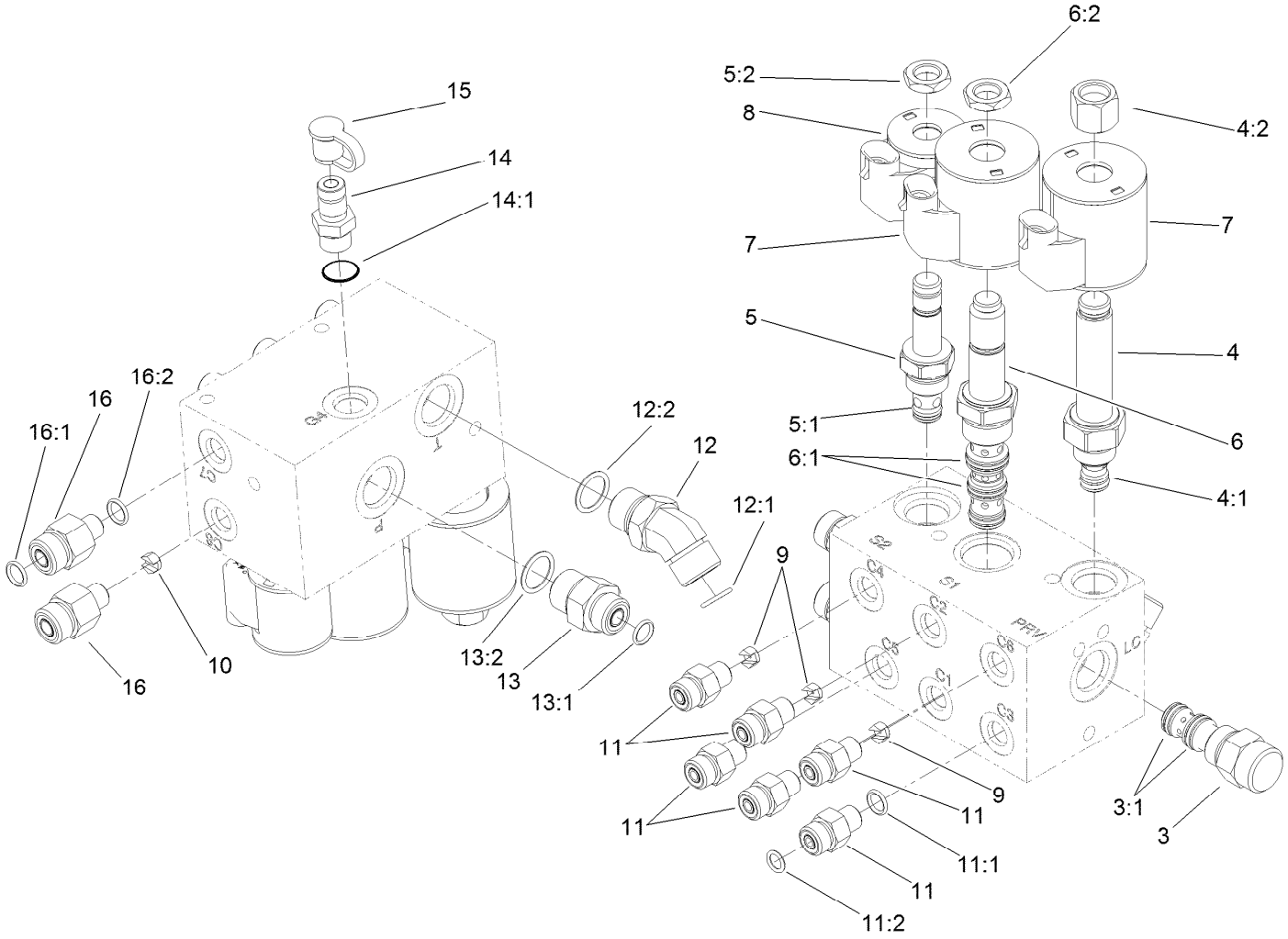

Lift Control Manifold Assembly No. 117-0158

Ref.	Part Number	Qty.	Description
3	117-0228	1	Element-Directional, Pilot
3:1	115-5413	1	Seal Kit
4	117-0227	1	Valve-Relief, Proportional
4:1	105-9156	1	Seal Kit
4:2	119-2160	1	Nut-Coil
5	107-7516	1	Solenoid Valve ASM
5:1	105-9156	1	Seal Kit
5:2	110-2634	1	Nut-Coil
6	110-8906	1	Valve-Solenoid
6:1	110-8908	1	Spool Valve Seal Kit
6:2	110-2634	1	Nut-Coil
7	110-6344	2	Coil-12V, DC
8	110-0497	1	Coil-Solenoid
9	110-8902	3	Orifice-Control, Flow (0.046)
10	114-4682	1	Orifice-Flow Control (.030)
11	340-92	6	Fitting-Straight

Ref.	Part Number	Qty.	Description
11:1	237-78	1	O-Ring
11:2	237-21	1	O-Ring
12	340-101	1	Fitting-HYD, 45 DEG
12:1	237-30	1	O-Ring
12:2	237-79	1	O-Ring
13	340-3	1	Fitting-Straight
13:1	237-22	1	O-Ring
13:2	237-79	1	O-Ring
14	59-7410	1	Fitting-Diagnostic
14:1	237-42	1	O-Ring
15	354-79	1	Cap-Dust
16	340-88	2	Fitting-Straight
16:1	237-22	1	O-Ring
16:2	237-78	1	O-Ring

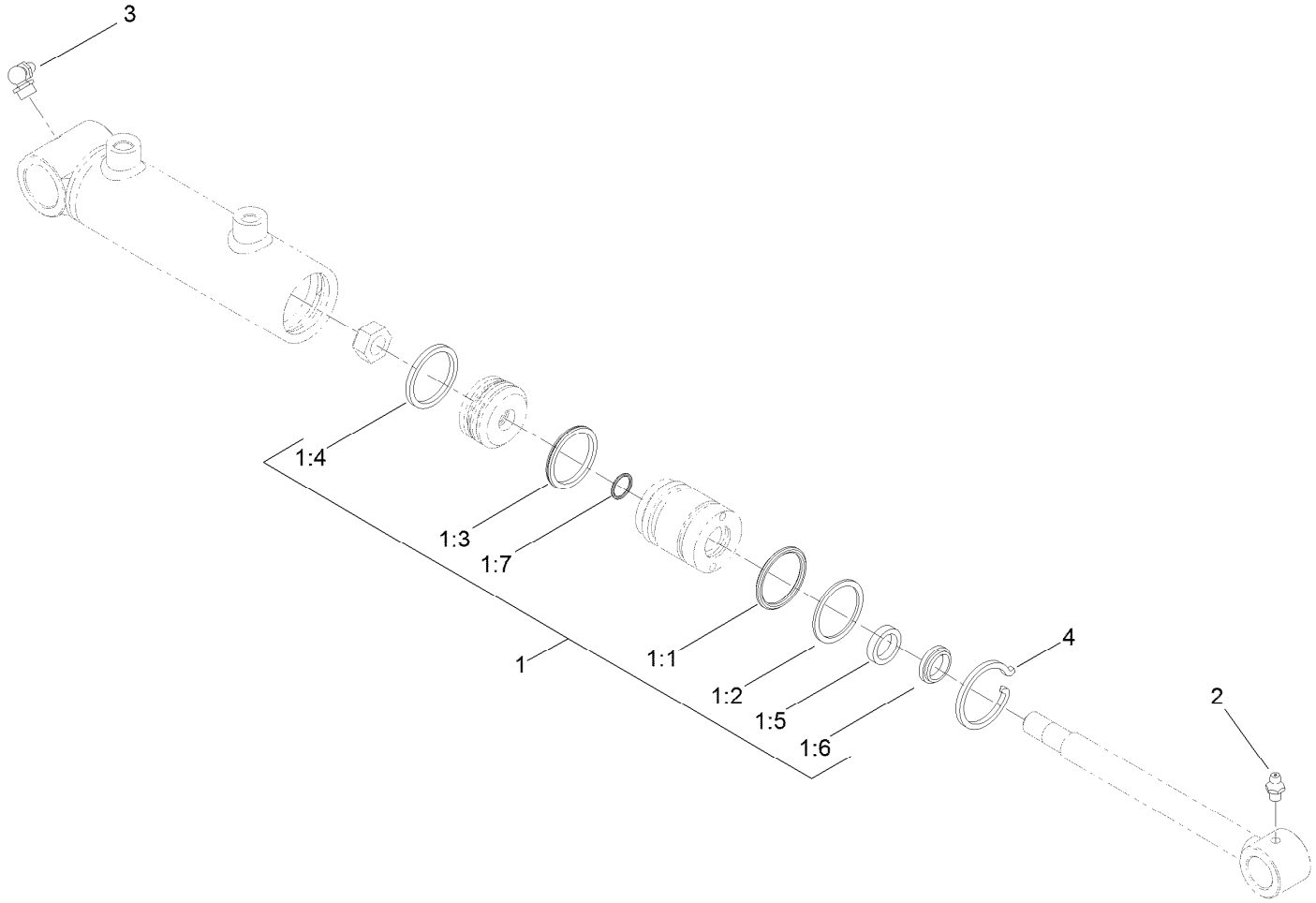

Hydraulic Cylinder Assembly No. 119-6989

Ref.	*Part Number*	*Qty.*	*Description*
1	119-6992	1	Seal Kit
1:1		1	O-Ring ●
1:2		1	Backup ●
1:3		1	Bp Seal ●
1:4		1	Wear Ring-Ht ●
1:5		1	Bs Seal ●
1:6		1	Dust Seal-Dt ●
1:7		1	O-Ring ●
2	302-5	1	Fitting-Grease
3	302-33	1	Fitting-Grease
4	84-1680	1	Ring-Retaining

● Not serviced separately

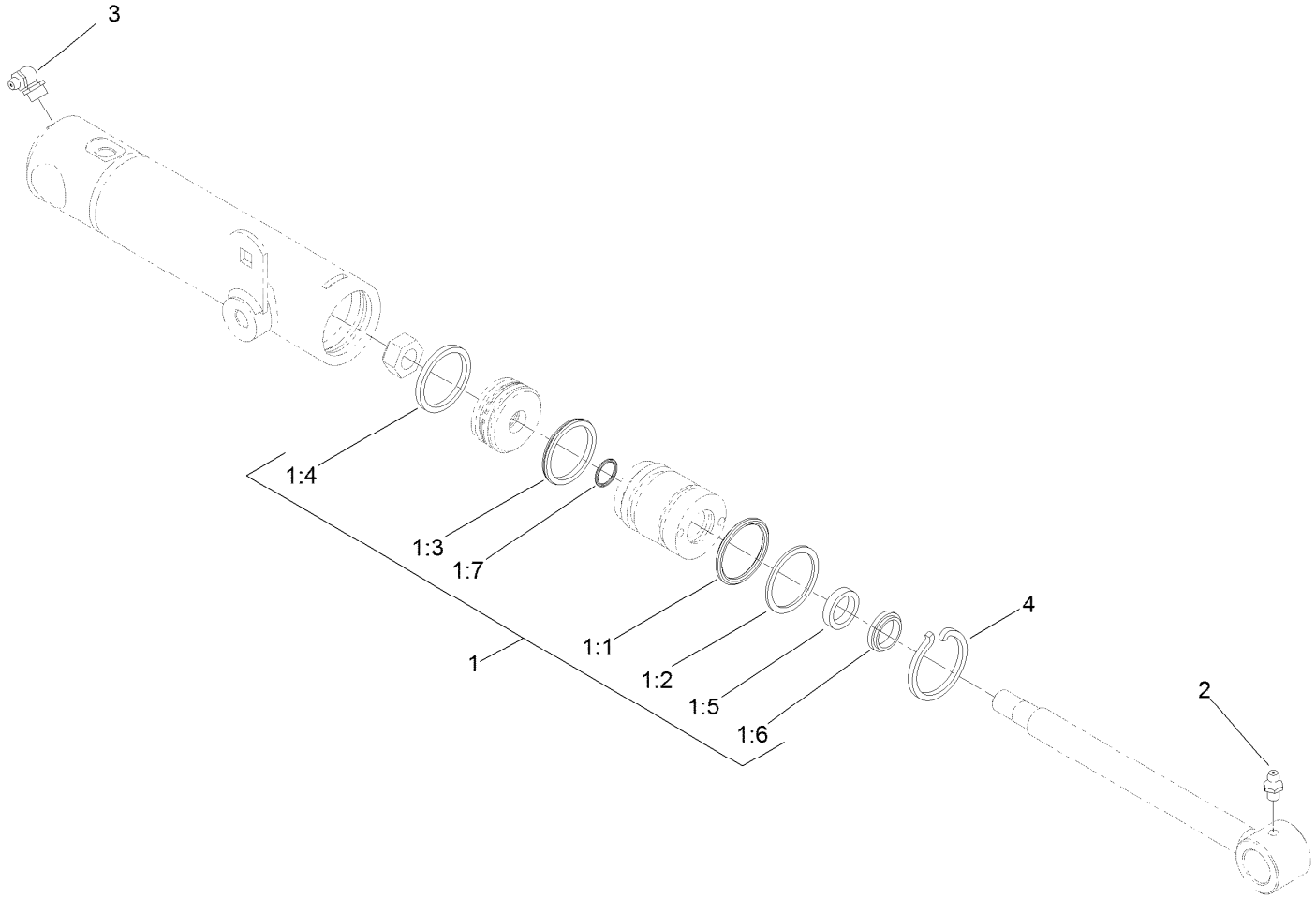

Hydraulic Cylinder Assembly No. 119-6990

Ref.	*Part Number*	*Qty.*	*Description*
1	119-6992	1	Seal Kit
1:1		1	O-Ring ●
1:2		1	Backup ●
1:3		1	Bp Seal ●
1:4		1	Wear Ring-Ht ●
1:5		1	Bs Seal ●
1:6		1	Dust Seal-Dt ●
1:7		1	O-Ring ●
2	302-5	1	Fitting-Grease
3	302-33	1	Fitting-Grease
4	84-1680	1	Ring-Retaining

● Not serviced separately

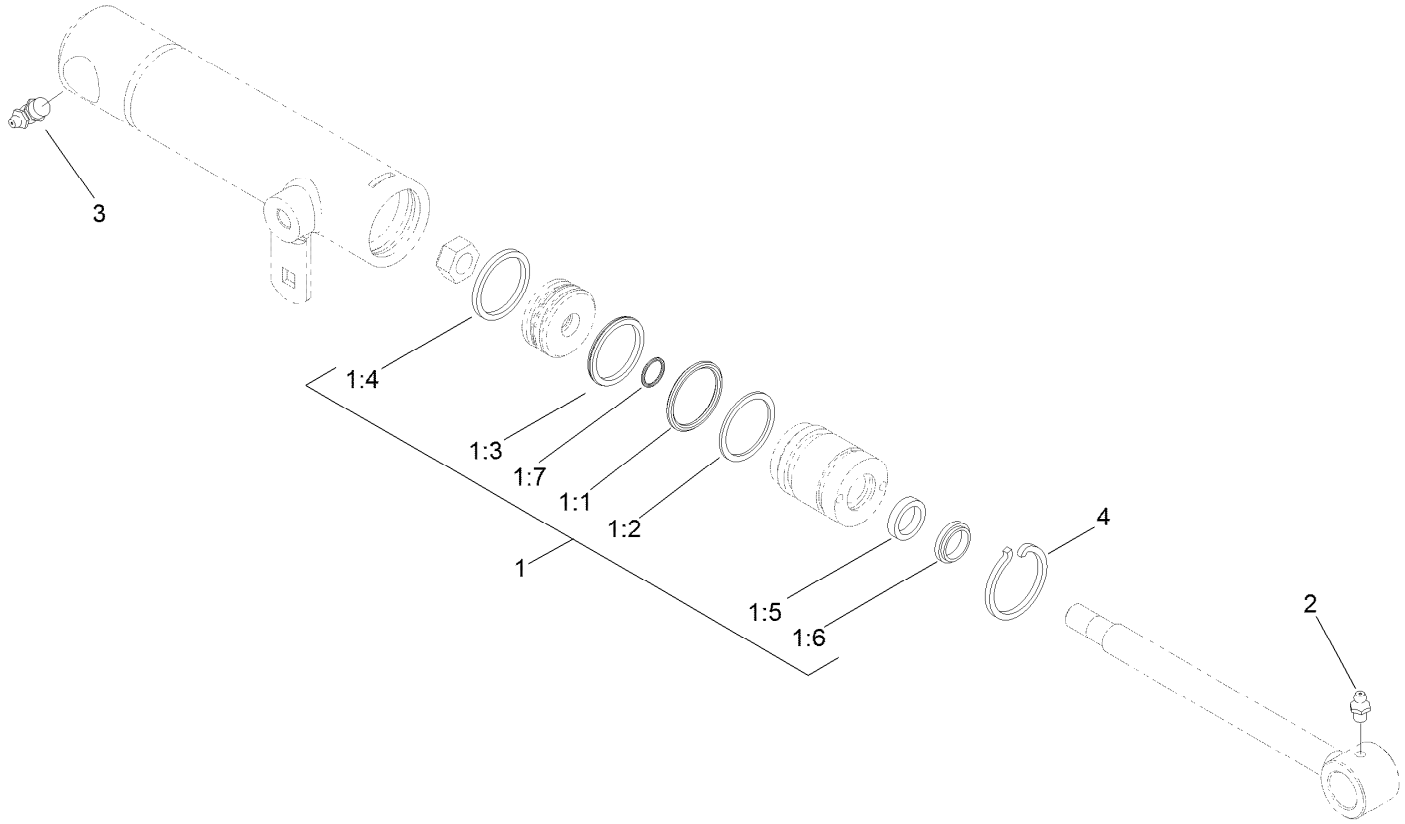

Hydraulic Cylinder Assembly No. 119-6991

Ref.	*Part Number*	*Qty.*	*Description*
1	119-6992	1	Seal Kit
1:1		1	O-Ring ●
1:2		1	Backup ●
1:3		1	Bp Seal ●
1:4		1	Wear Ring-Ht ●
1:5		1	Bs Seal ●
1:6		1	Dust Seal-Dt ●
1:7		1	O-Ring ●
2	302-5	1	Fitting-Grease
3	302-33	1	Fitting-Grease
4	84-1680	1	Ring-Retaining

● Not serviced separately

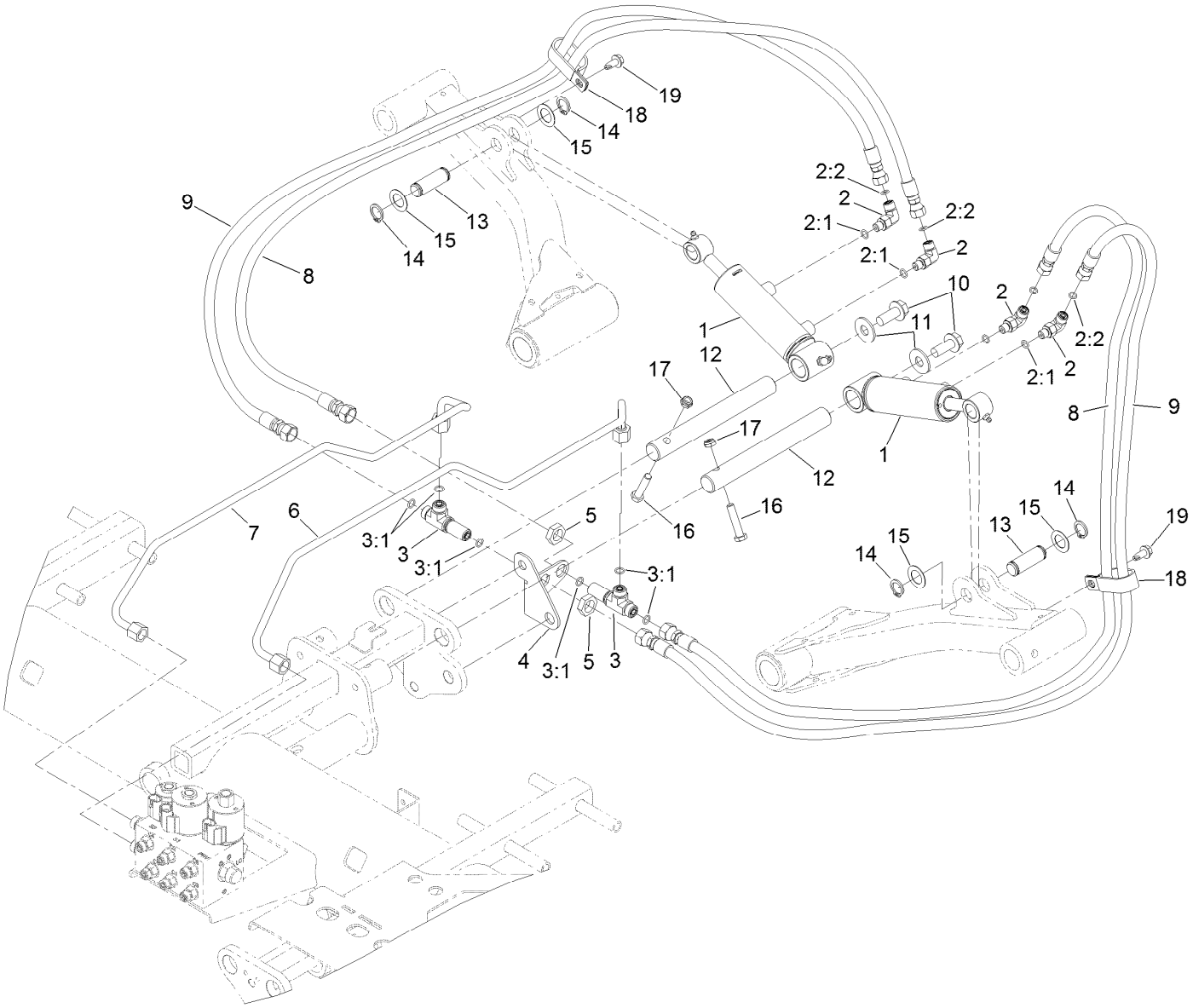

Deck No. 2 and 3 Lift Circuit Hydraulic Assembly

Ref.	Part Number	Qty.	Description
1	119-6988	2	HYD Cylinder ASM
2	340-132	4	Fitting-Elbow, 90 DEG
2:1	237-78	1	O-Ring
2:2	237-21	1	O-Ring
3	340-68	2	Fitting-Tee, Bulkhead
3:1	237-22	3	O-Ring
4	117-0179	1	Bracket-Bulkhead
5	340-70	2	Nut-Lock
6	117-0175	1	Tube-HYD
7	117-0176	1	Tube-HYD
8	105-5402	2	Hose-HYD

Ref.	Part Number	Qty.	Description
9	105-5405	2	Hose-HYD
10	3234-38	2	Screw-HHF
11	3256-6	2	Washer-Flat
12	117-0148	2	Pin-Cylinder
13	104-0046	2	Pin-Slide, Cylinder
14	32120-93	4	Ring-Retaining
15	3-6498	4	Washer-Thrust
16	323-9	2	Screw-HH
17	3296-59	2	Nut-Lock, NI
18	2412-137	2	Clamp-R, Double
19	32104-32	2	Screw-HWH

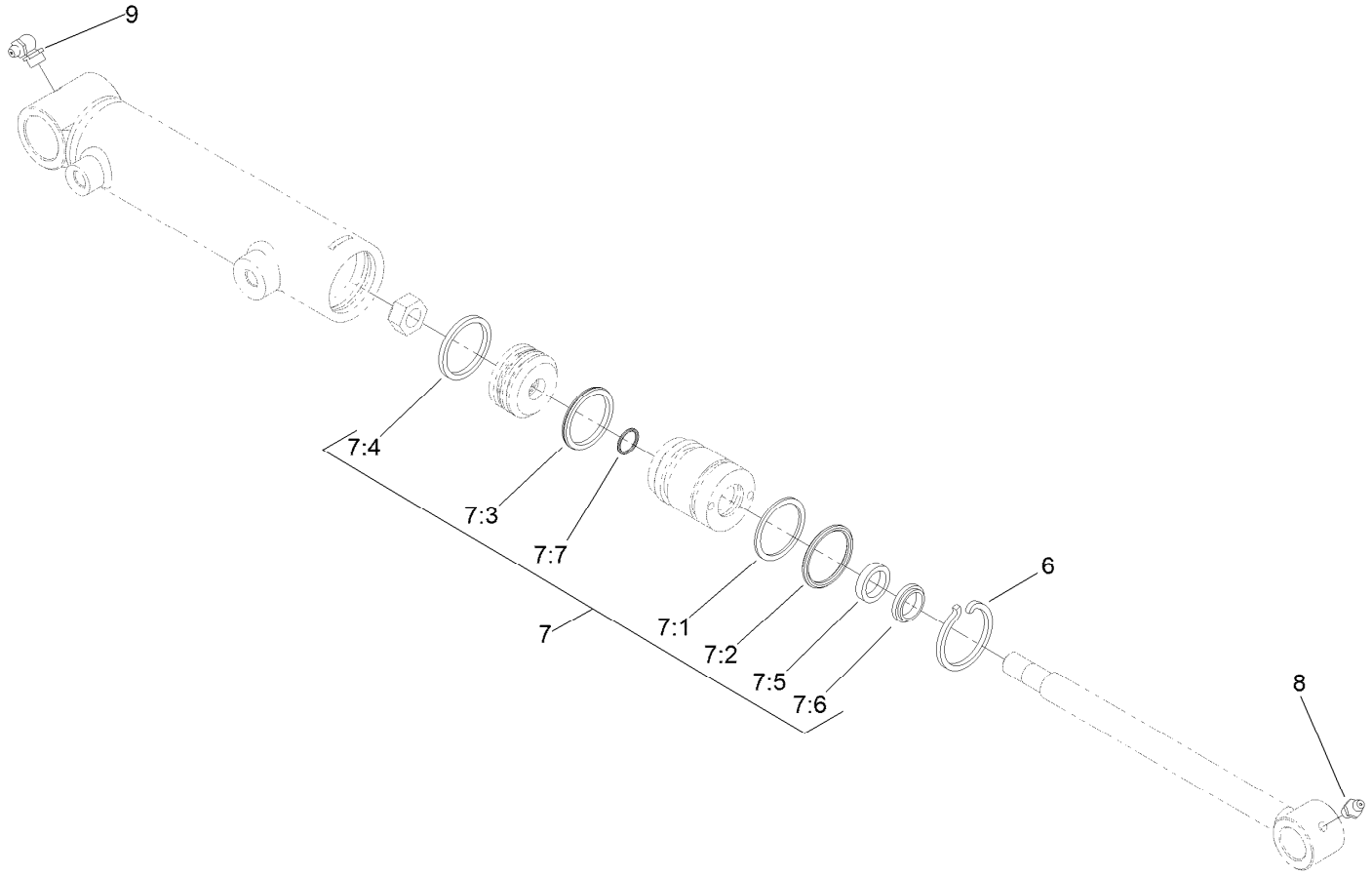

Hydraulic Cylinder Assembly No. 119-6988

Ref.	*Part Number*	*Qty.*	*Description*
6	84-1680	1	Ring-Retaining
7	119-6992	1	Seal Kit
7:1		1	O-Ring ●
7:2		1	Backup ●
7:3		1	Bp Seal ●
7:4		1	Wear Ring-Ht ●
7:5		1	Bs Seal ●
7:6		1	Dust Seal-Dt ●
7:7		1	O-Ring ●
8	302-5	1	Fitting-Grease
9	302-33	1	Fitting-Grease

● Not serviced separately

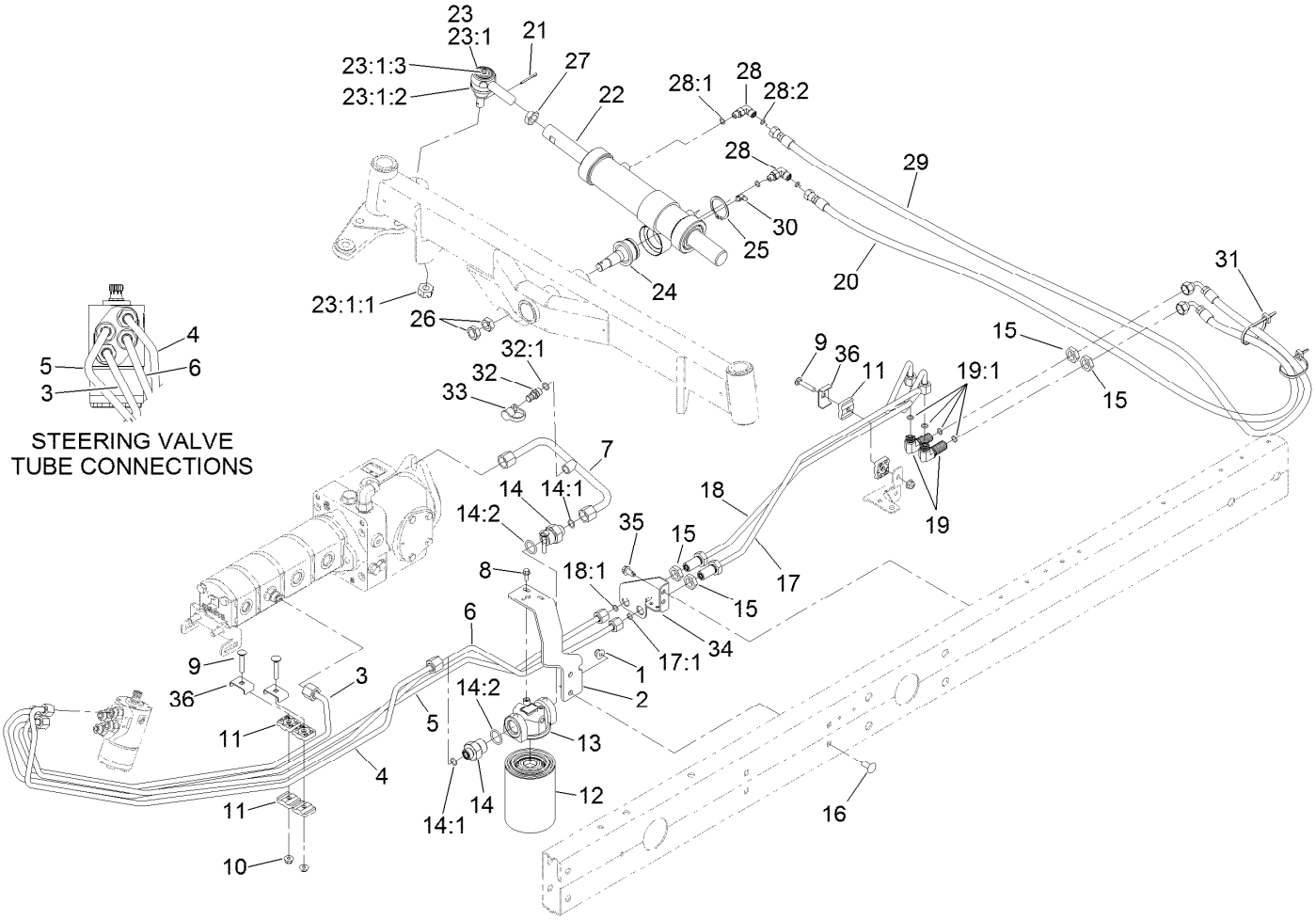

Steering Hydraulic Assembly

Ref.	Part Number	Qty.	Description
1	104-8301	2	Nut-HF, NI
2	110-0906-01	1	Support-Filter, Oil
3	117-0167	1	Tube-HYD
4	108-1711	1	Tube-HYD
5	120-3764	1	Tube-HYD
6	120-3765	1	Tube-HYD
7	121-5601	1	Tube-HYD
8	3234-33	2	Screw-HHF
9	3230-5	3	Bolt-CARR
10	104-8300	4	Nut-HF, NI
11	56-7973	6	Clamp-Tube
12	86-3010	1	Filter-Oil
13	117-5820	1	Head-Filter
14	100-4240	2	Fitting-STR
14:1	237-30	1	O-Ring
14:2	237-81	1	O-Ring
15	340-70	4	Nut-Lock
16	3231-27	2	Screw-CARR

Ref.	Part Number	Qty.	Description
17	133-2988	1	Tube ASM
17:1	237-22	1	O-Ring
18	133-2989	1	Tube ASM
18:1	237-22	1	O-Ring
19	340-154	2	Union-Bulkhead
19:1	237-22	2	O-Ring
20	110-0928	1	Hose-HYD
21	3272-12	1	Pin-Cotter
22	114-0403	1	HYD Steering Cylinder ASM
23	71-4740-03	1	RH Tie Rod End ASM
23:1		1	End-Rod, Tie (RH) ● ■
23:1:1	105-7941	1	Nut-Hex, Slotted ●
23:1:2	105-7835	1	Seal ●
23:1:3	302-5	1	Fitting-Grease
24	106-6774	1	Joint-Ball
25	32151-104	1	Ring-Retaining, External
26	3220-6	2	Nut-Jam
27	84-5300	1	Nut-Jam

● Not illustrated

■ Not serviced separately

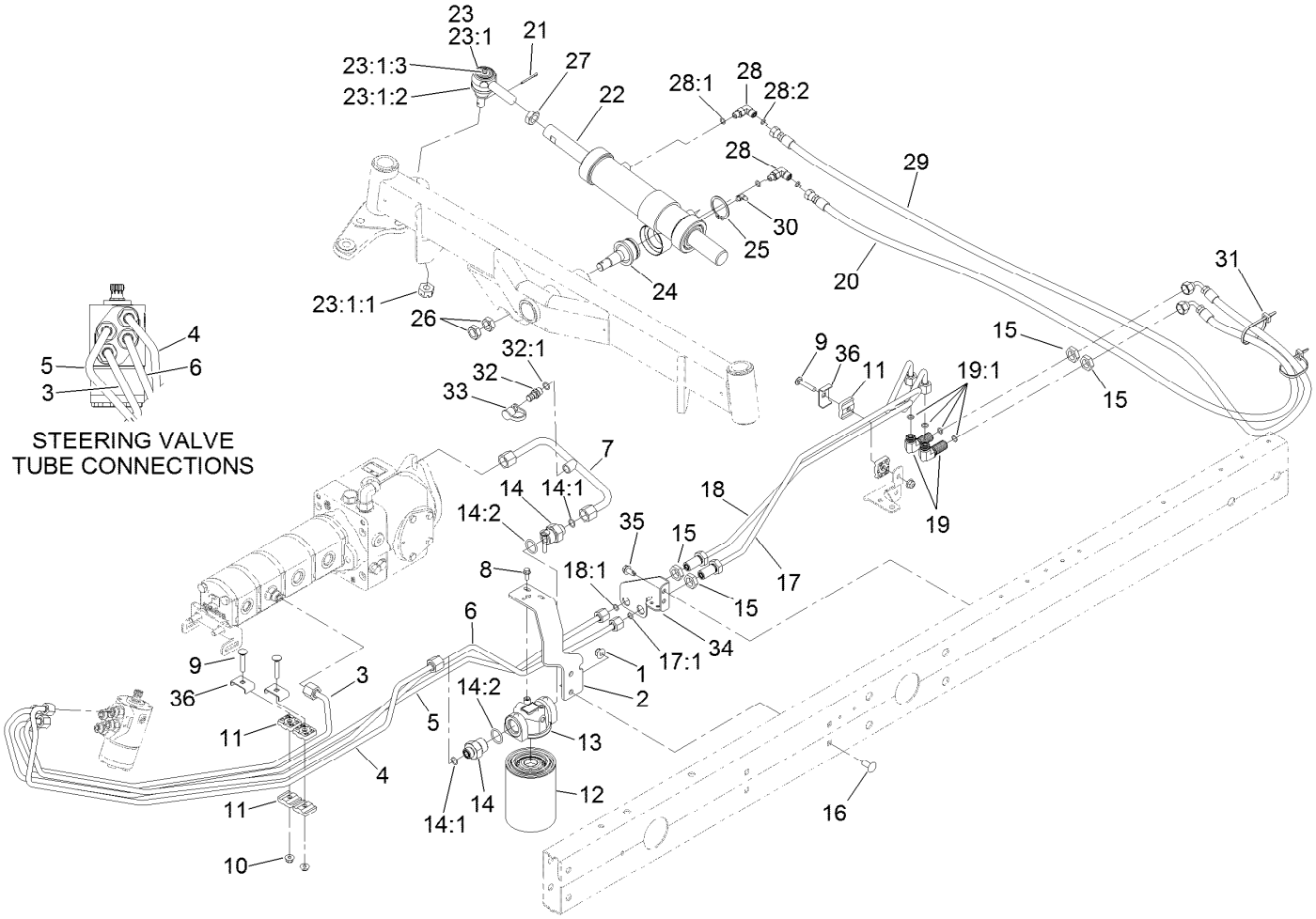

Steering Hydraulic Assembly (continued)

Ref.	Part Number	Qty.	Description
28	340-132	2	Fitting-Elbow, 90 DEG
28:1	237-78	1	O-Ring
28:2	237-21	1	O-Ring
29	110-0973	1	Hose-HYD
30	302-40	1	Fitting-Grease, 90 DEG
31	3290-378	2	Tie-Cable

Ref.	Part Number	Qty.	Description
32	59-7410	1	Fitting-Diagnostic
32:1	237-42	1	O-Ring
33	354-79	1	Cap-Dust
34	120-3781-01	1	Bracket-Bulhead, Steer
35	32104-32	2	Screw-HWH
36	119-1418	3	Plate-Clamp, Short

● Not illustrated

■ Not serviced separately

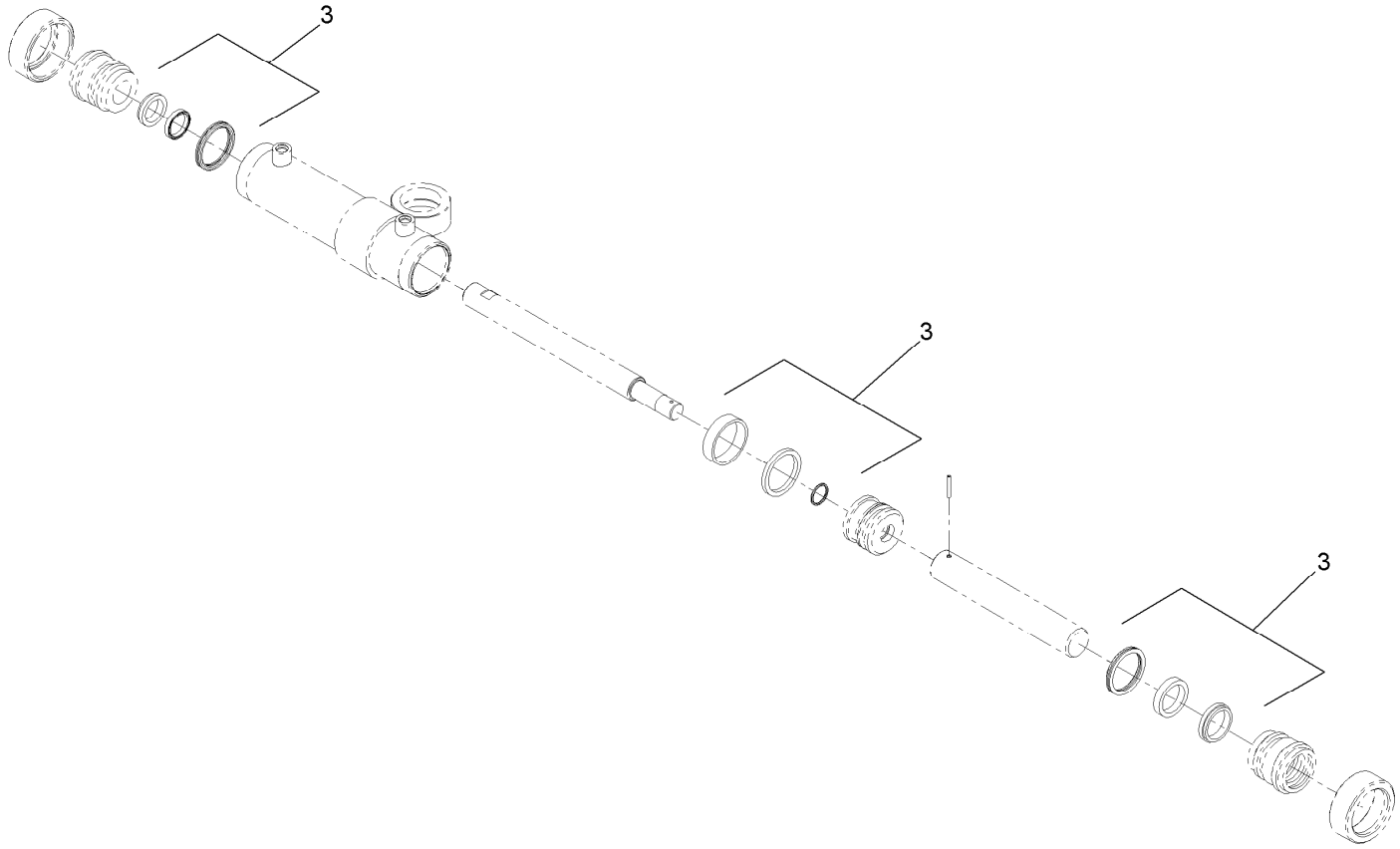

Hydraulic Cylinder Assembly No. 114-0403

Ref.	*Part Number*	*Qty.*	*Description*
3	114-0404	1	Cylinder Repair Kit

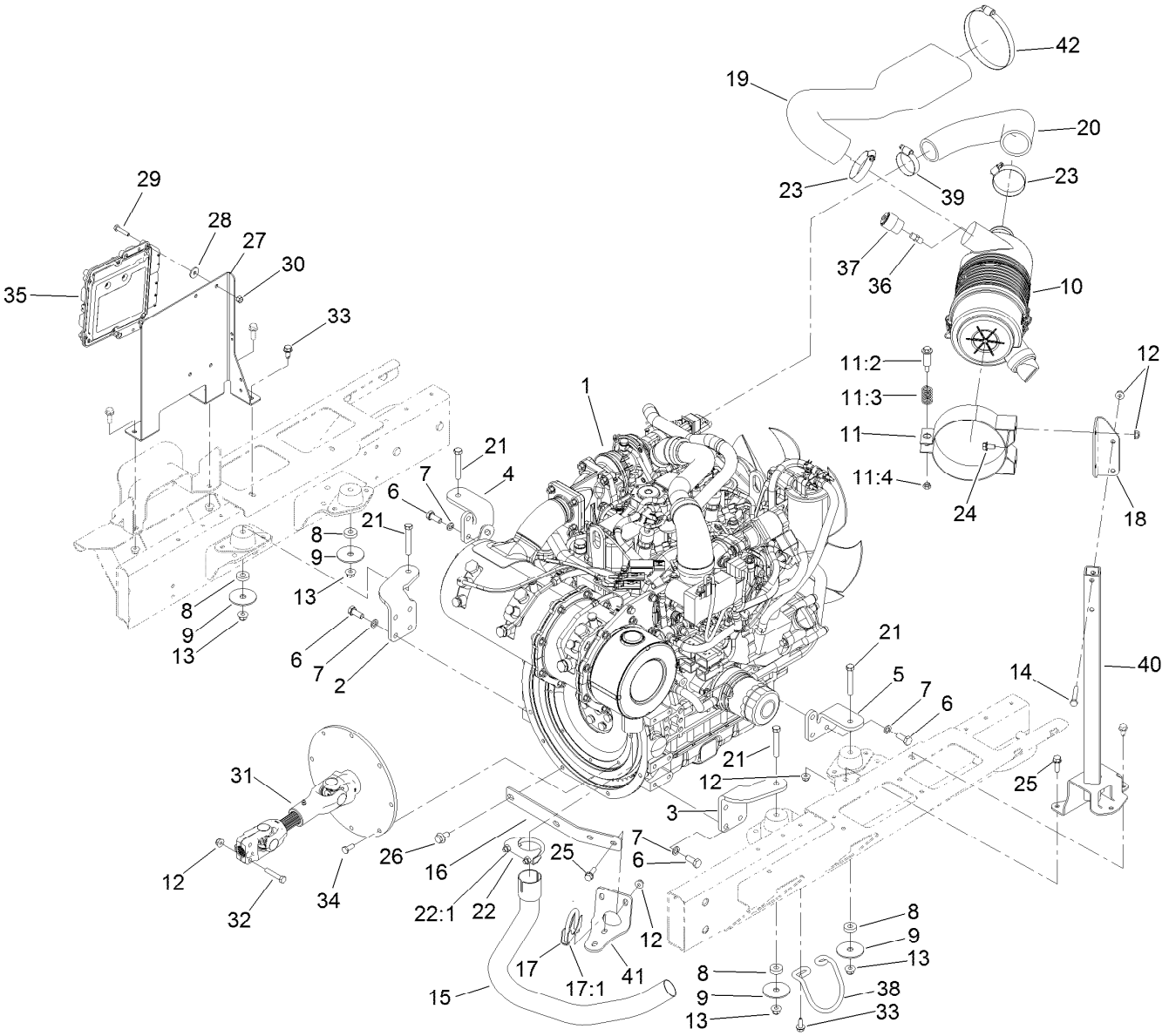

Engine, Driveshaft and Air Cleaner Assembly

Ref.	Part Number	Qty.	Description
1	120-3797	1	Engine-Yanmar, 3Tnv86Ct-Dtr
2	120-3777-03	1	Mount-Engine, Right Front
3	120-3778-03	1	Mount-Engine, Left Front
4	120-3779-03	1	Mount-Engine, Right Rear
5	120-3780-03	1	Mount-Engine, Left Rear
6	33115-025	14	Screw-HH
7	48-9590	14	Washer-Lock
8	62-6660	4	Spacer
9	87-5100	4	Washer-Snubbing
10	98-4517	1	Air Cleaner ASM
11	100-4825	1	Band-Mounting, Air Cleaner
11:2	94-3653	1	Bolt
11:3	94-3654	1	Spring
11:4	48-9510	1	Nut
12	104-8300	10	Nut-HF, NI
13	104-8301	4	Nut-HF, NI
14	322-10	2	Screw-HH
15	120-3790	1	Tube-Exhaust
16	121-5594-03	1	Bracket-Tailpipe
17	2112-9	1	Clamp

Ref.	Part Number	Qty.	Description
17:1	32128-20	2	Nut-HF
18	120-6298-03	1	Bracket-Aircleaner
19	121-5559	1	Hose-Air Cleaner
20	133-2991	1	Hose-AC, Out
21	323-12	4	Screw-HH
22	2112-6	1	Clamp-Muffler
22:1	3218-2	2	Nut-Hex Jam
23	2412-125	2	Clamp-Hose
24	3234-14	2	Screw-HHF
25	3234-29	4	Screw-HHF
26	33105-020	2	Screw-HHF
27	122-0898-03	1	Bracket-Ecu
28	66-2921	4	Washer-Friction
29	321-8	4	Screw-HH
30	3296-42	4	Nut-Lock, NI
31	133-2996	1	Driveshaft Kit
32	322-9	2	Screw-HH
33	32104-32	3	Screw-HWH
34	33104-016	8	Screw-HHF
35	121-5592	1	Electronic Control Unit
36	94-1416	1	Adapter-Indicator

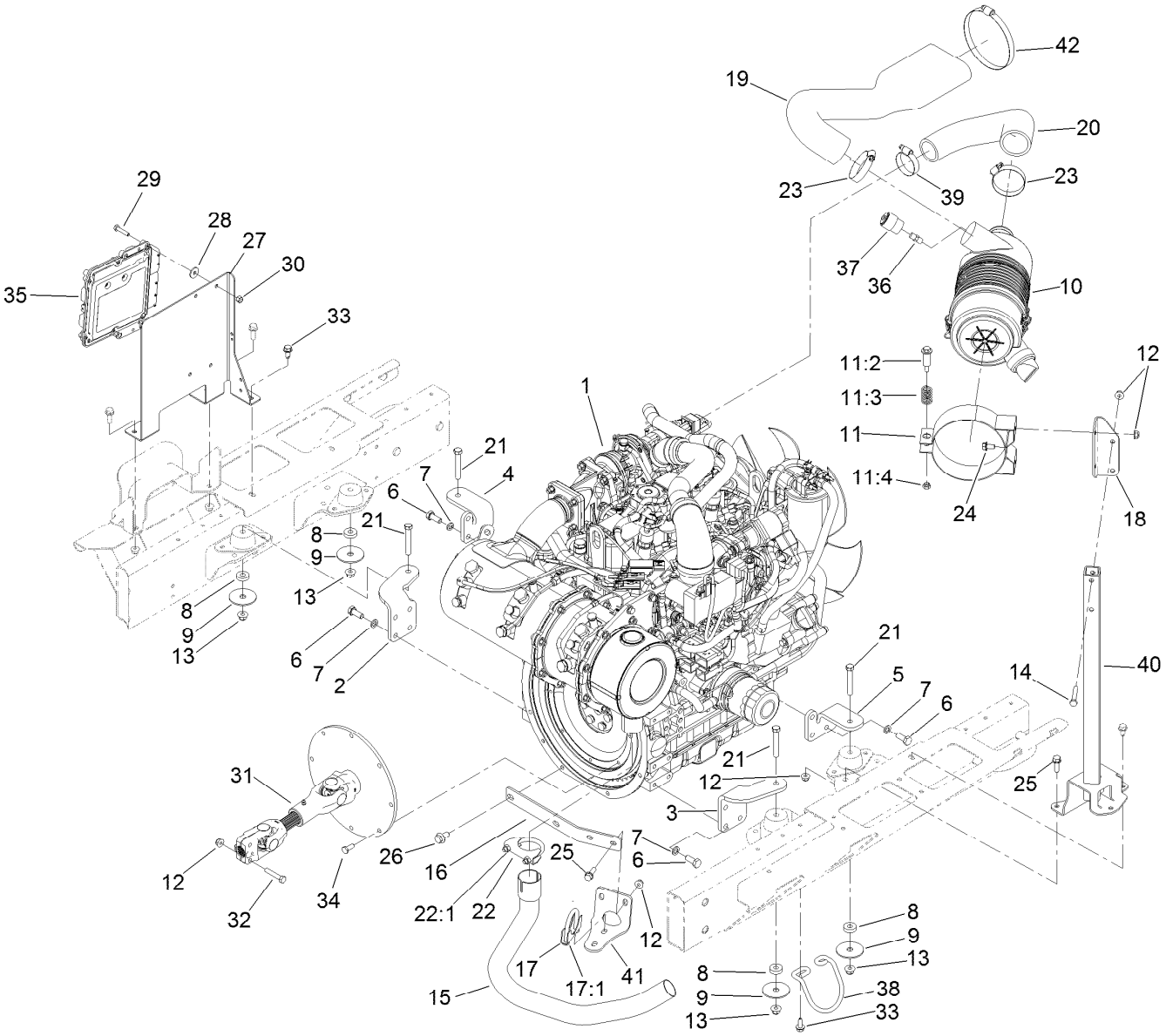

Engine, Driveshaft and Air Cleaner Assembly (continued)

Ref.	Part Number	Qty.	Description
37	93-9164	1	Indicator-Mini
38	127-2612	1	Guard-Pipe, Tail
39	2412-3	1	Clamp-Hose
40	120-2949-03	1	Stand
41	121-5595-03	1	Bracket-Tailpipe
42	2412-46	1	Clamp

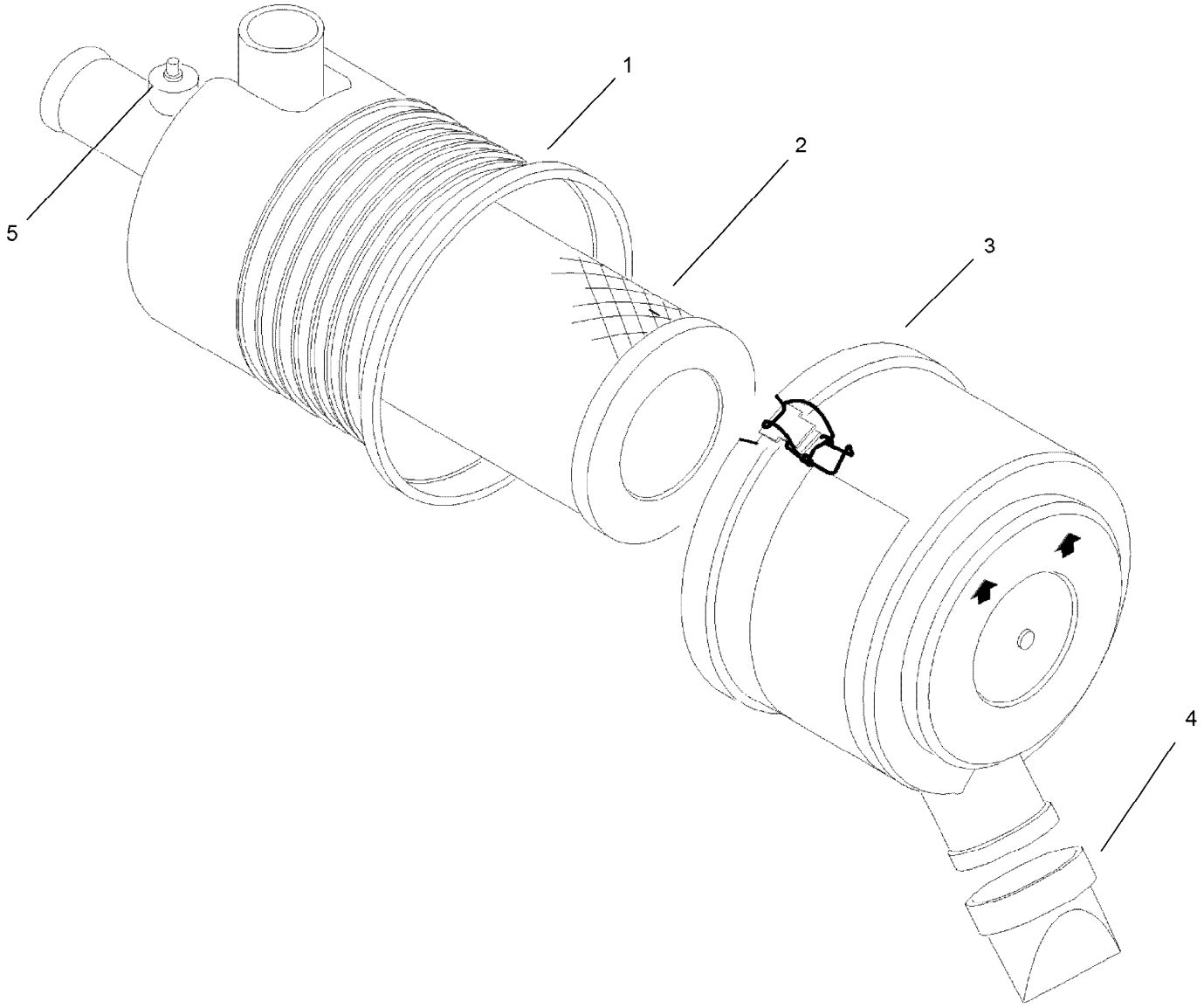

Air Cleaner Assembly No. 98-4517

Ref.	Part Number	Qty.	Description
1		1	Body ASM ●
2	108-3810	1	Filter-Air
3	98-9771	1	Cover ASM
4	87-9400	1	Valve-Vacuator
5		1	Plug ●

● Not serviced separately

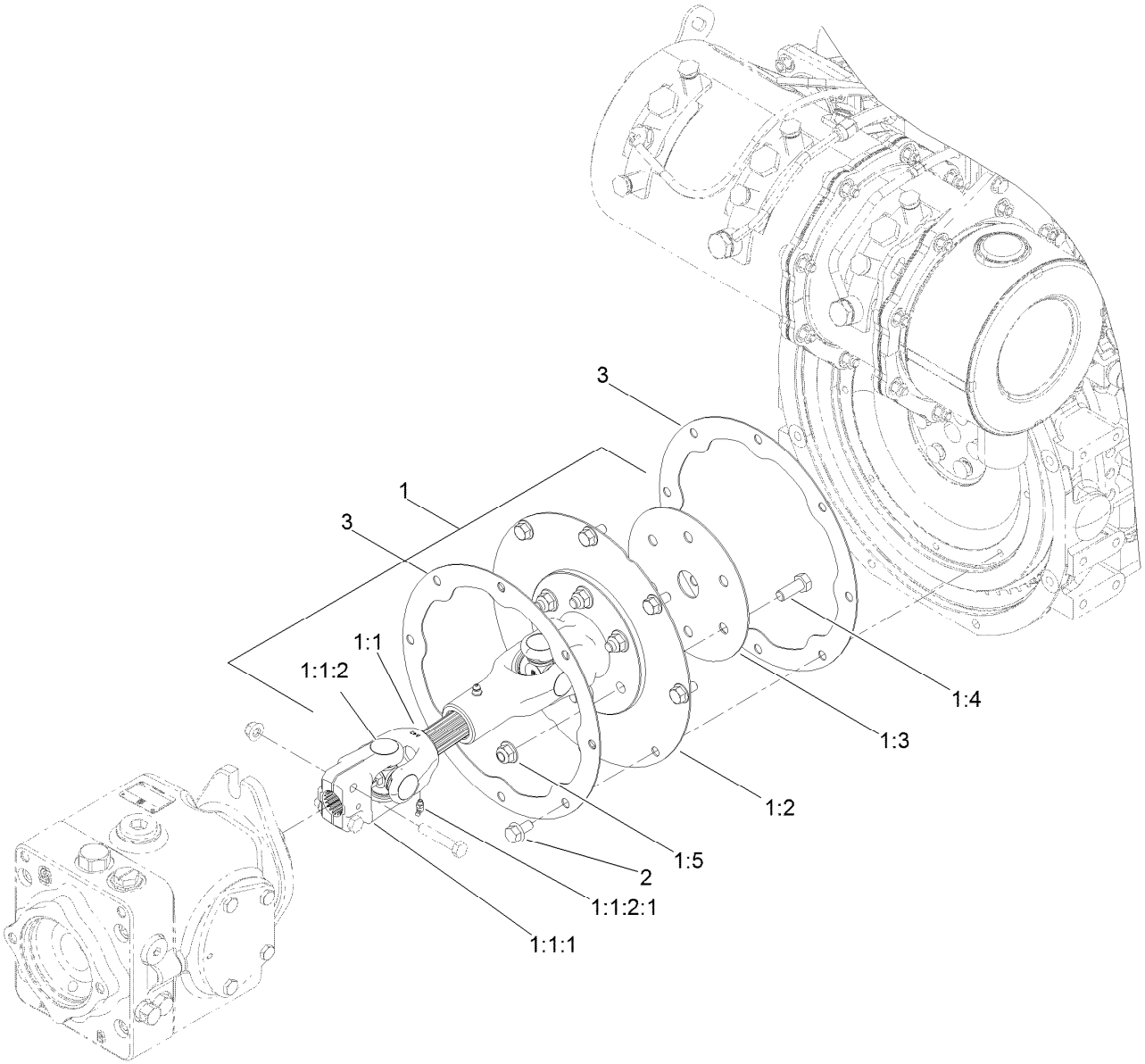

Driveshaft Kit Assembly No. 133-2996

Ref.	*Part Number*	*Qty.*	*Description*
1		1	Driveshaft ASM ●
1:1		1	Driveshaft ●
1:2	136-7991-03	1	Plate-Flywheel Adapter
1:3	133-2963-03	1	Ring-Backup
1:1:1	54-9040	1	Yoke-End
1:1:2	54-9180	2	U-Joint Kit
1:1:2:1	62-3820	1	Fitting-Grease
1:4	323-6	6	Screw-HH
1:5	104-8301	6	Nut-HF, NI
2	33104-016	8	Screw-HHF
3	136-8040-03	2	Ring-Backup

● Not serviced separately

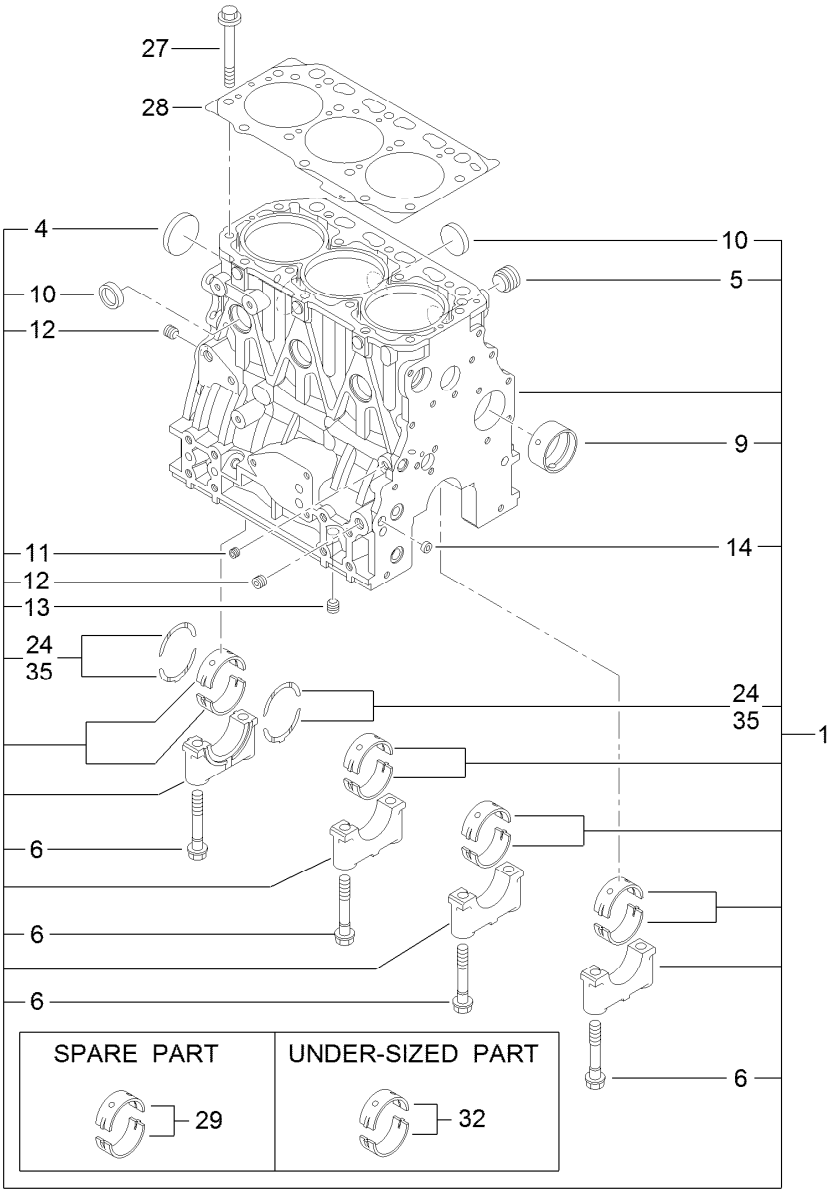

Cylinder Block Assembly

Ref.	Part Number	Qty.	Description
1	127-3750	1	Cylinder Block ASM
4	125-6980	1	Plug
5	125-7170	1	Plug
6	125-7007	8	Bolt
9	125-7108	1	Bushing
10	125-7239	6	Plug
11	125-6969	1	Plug
12	125-6973	2	Plug

Ref.	Part Number	Qty.	Description
13	125-6973	1	Plug
14	125-7237	1	Plug
24	125-7010	2	Metal-Thrust
27	125-7006	14	Bolt
28	127-3751	1	Head Gasket ASM
29	125-6981	4	Metal-Main
32	125-7009	4	Metal-Main (0.25)
35	125-7011	1	Metal-Thrust (0.25)

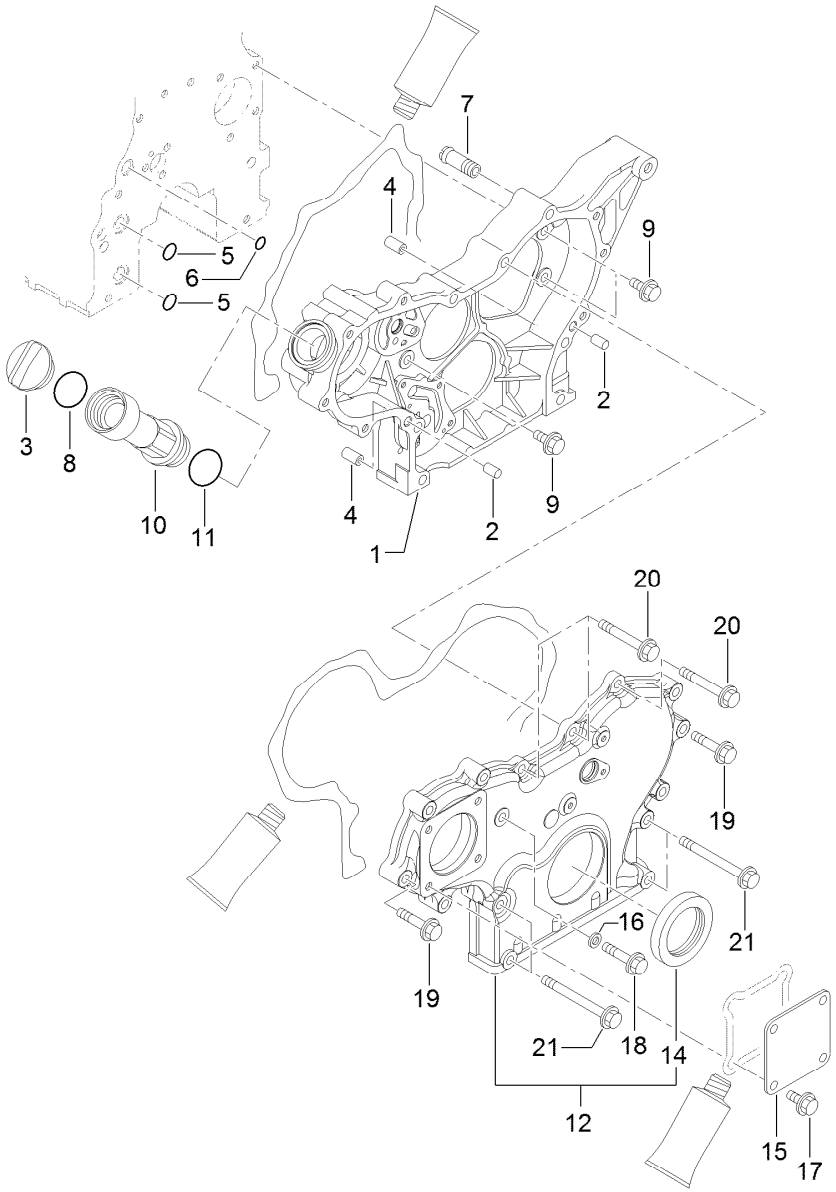

Gear Housing Assembly

Ref.	Part Number	Qty.	Description
1	127-3752	1	Case-Gear
2	125-6995	2	Pin
3	125-6972	1	Cover-Filler
4	125-7107	2	Pipe
5	125-6909	2	O-Ring
6	127-2973	1	O-Ring
7	127-3753	1	Joint
8	125-7197	1	O-Ring
9	125-7214	3	Bolt
10	127-3754	1	Pipe

Ref.	Part Number	Qty.	Description
11	125-7197	1	O-Ring
12	127-3024	1	Gearcase Cover ASM
14	125-6944	1	Seal-Oil
15	125-6977	1	Cover
16	125-7174	1	Washer-Seal
17	125-7214	4	Bolt
18	125-7217	1	Bolt
19	125-7218	7	Bolt
20	125-7222	3	Bolt
21	125-7224	4	Bolt

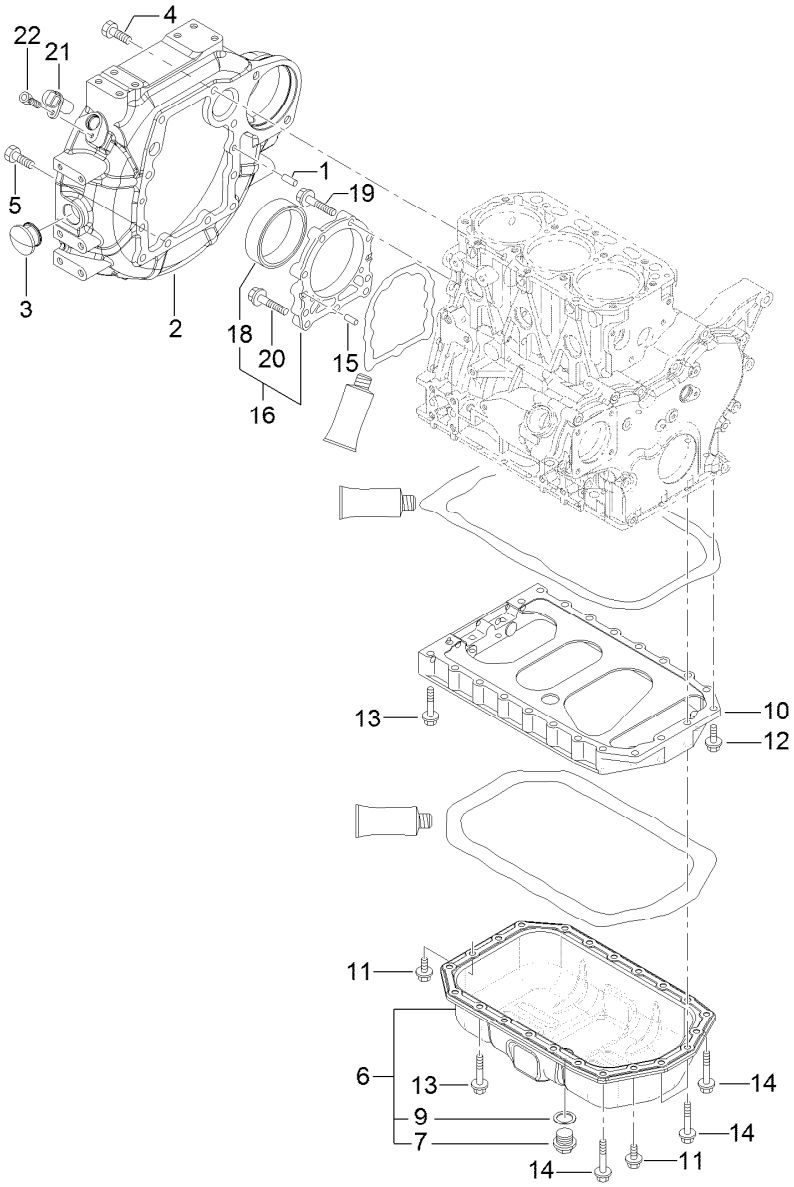

Flywheel Housing and Oil Sump Assembly

Ref.	Part Number	Qty.	Description
1	125-6995	1	Pin
2	127-3025	1	Housing-Flywheel
3	125-6910	1	Cap
4	125-7226	6	Bolt
5	125-7227	4	Bolt
6	127-3755	1	Oil Pan ASM
7	125-6912	1	Plug-Drain
9	125-7177	1	Washer-Seal
10	127-3756	1	Spacer
11	125-7214	4	Bolt

Ref.	Part Number	Qty.	Description
12	125-7215	2	Bolt
13	125-7219	16	Bolt
14	125-7220	4	Bolt
15	125-6995	2	Pin
16	125-6996	1	Case ASM
18	125-7106	1	Seal-Oil
19	125-7045	6	Bolt
20	125-7217	3	Bolt
21	127-3062	1	Sensor-Rev, Flywheel
22	127-3184	1	Bolt

Cylinder Head and Cover Assembly

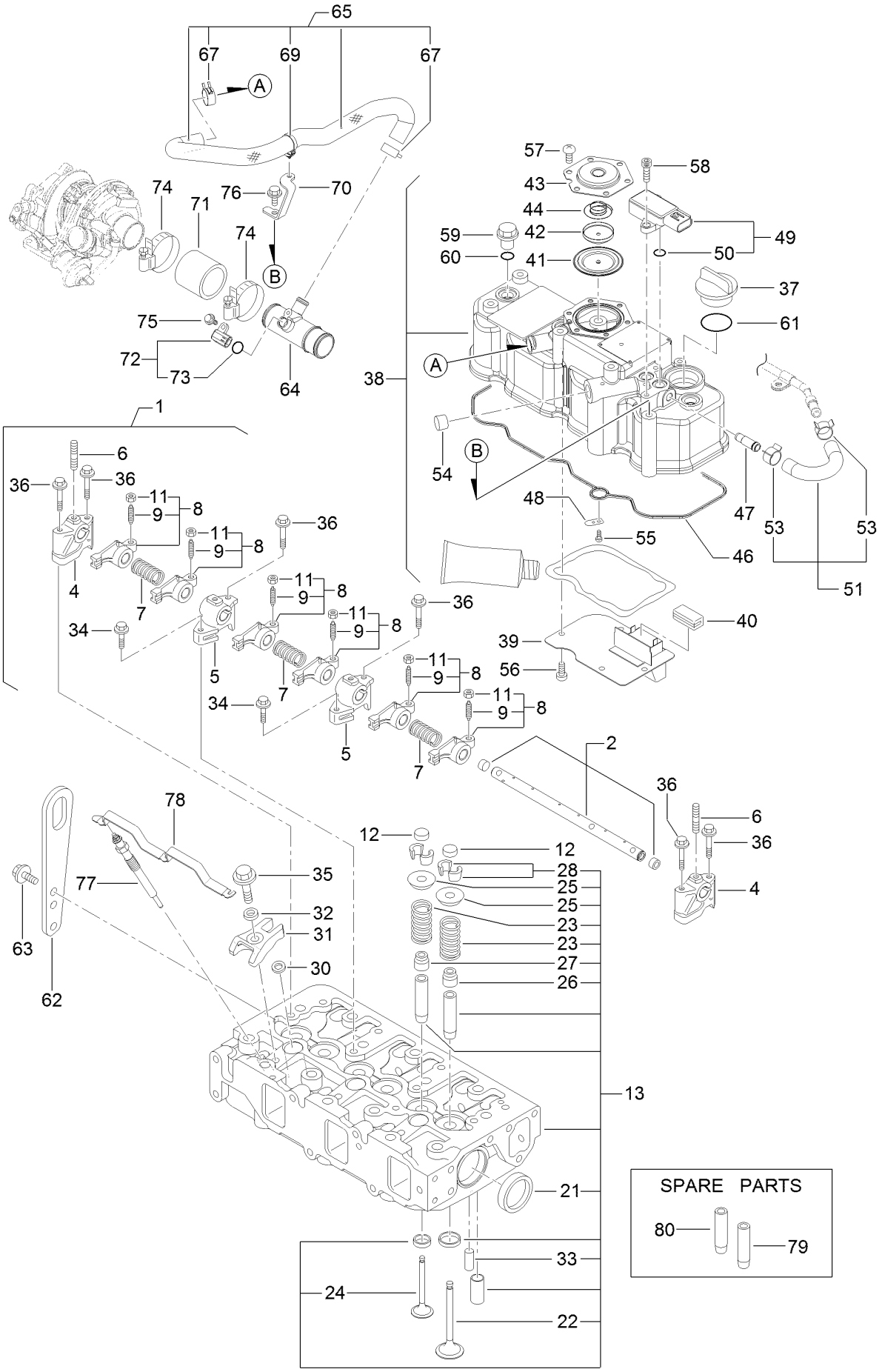

Cylinder Head and Cover Assembly (continued)

Ref.	Part Number	Qty.	Description
1	127-3757	1	Shaft ASM
2	127-3758	1	Shaft
4	127-2974	2	Support
5	127-2975	2	Support
6	127-3759	3	Stud
7	127-2995	3	Spring
8	127-2989	6	Arm-Rocker
9	125-7013	6	Screw-Adjust, Valve
11	125-7014	6	Nut
12	127-2996	6	Cap-Valve
13	127-3760	1	Cylinder Head ASM
21	125-7240	2	Plug
22	127-2990	3	Valve
23	127-3012	6	Spring
24	127-2994	3	Valve
25	127-3013	6	Retainer-Spring
26	127-2986	3	Seal-Stem, Valve
27	127-3027	3	Seal-Stem, Valve
28	127-3186	6	Pin-Cotter
30	127-3021	3	Gasket-Injector
31	127-3028	3	Retainer-Injector
32	127-2980	3	Washer-Injector
33	125-7184	2	Pin-Spring
34	125-7215	2	Bolt
35	125-7217	3	Bolt
36	125-7220	6	Bolt
37	125-6972	1	Cover-Filler
38	127-3761	1	Cylinder Head Cover ASM
39	127-2988	1	Plate
40	125-7012	1	Baffle
41	125-6959	1	Diaphragm
42	125-6960	1	Plate
43	125-6961	1	Plate-Breather
44	125-6962	1	Spring-Diaphragm
46	127-3762	1	Gasket-Cover, Cylinder Head
47	127-3026	1	Joint
48	125-6994	1	Spring
49	127-3029	1	Sensor-Pressure
50	127-3032	2	O Ring-Sensor, Pressure
51	127-3040	1	Hose ASM
53	127-3041	2	Clip-Hose
54	125-6913	1	Plug
55	125-7186	1	Screw
56	125-7186	4	Screw
57	125-7186	6	Screw
58	127-3184	2	Bolt
59	125-6974	3	Knob
60	93-0418	3	O-Ring
61	125-7197	1	O-Ring
62	125-7111	1	Lifter
63	125-7214	2	Bolt
64	127-3763	1	Joint-Breather
65	127-3764	1	Hose Breather ASM
67	125-7040	2	Clip-Hose
69	127-3087	1	Band-Clip
70	127-3765	1	Stay-Hose, Breather
71	127-3766	1	Hose, Air
72	127-3030	1	Sensor-Temp, Air
73	127-3033	1	O-Ring
74	127-3767	2	Clamp 50
75	125-7208	1	Bolt
76	92-0803	1	Bolt
77	127-2991	3	Plug-Glow
78	127-3768	1	Connector-Plug, Glow
79	127-2979	3	Guide
80	127-2997	3	Guide-Valve

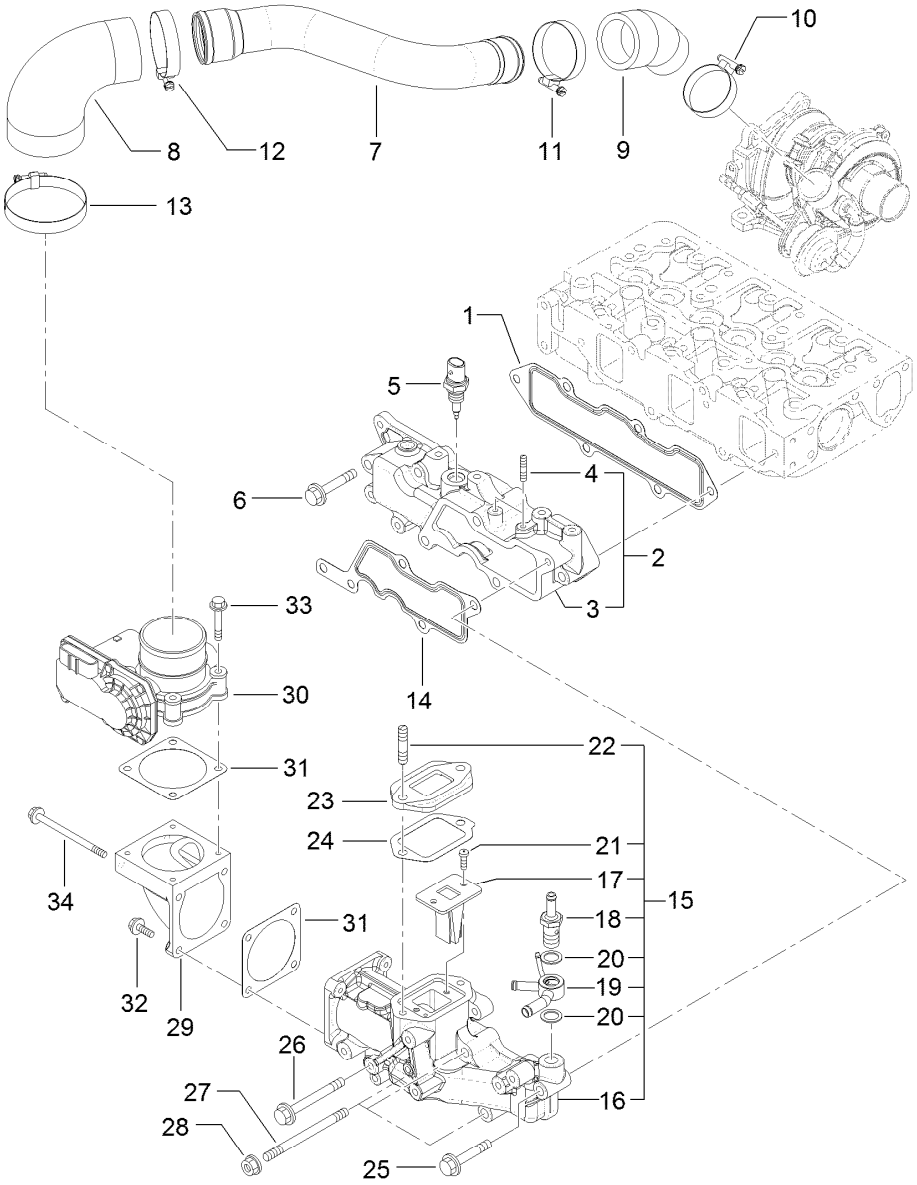

Suction Manifold Assembly

Ref.	Part Number	Qty.	Description
1	127-3769	1	Gasket-Manifold, Intake
2	127-3770	1	Intake Manifold ASM
3	127-3771	1	Manifold-Intake, Air
4	127-3180	2	Stud
5	127-3031	1	Sensor-Temp, Air
6	125-7220	3	Bolt
7	127-3772	1	Duct Suction
8	127-3096	1	Joint-Rubber
9	127-3773	1	Joint, Rubber
10	125-7189	1	Clamp-Hose
11	127-3170	1	Clamp-Hose
12	125-7190	1	Clamp-Hose
13	127-3171	1	Clamp-Hose
14	127-3034	1	Gasket-Collector
15	127-3093	1	Intake Collector ASM
16	127-3092	1	Collector-Intake
17	127-3139	1	Valve-Reed

Ref.	Part Number	Qty.	Description
18	127-3080	1	Joint-Hose
19	127-3081	1	Joint-Hose
20	127-3166	1	Washer-Seal
21	127-3168	11	Screw
22	127-3181	1	Stud
23	127-3045	1	Spacer-Valve, E G R
24	127-3046	1	Gasket-E G R
25	125-7220	1	Bolt
26	127-3178	1	Bolt
27	127-3182	3	Stud
28	125-7229	3	Nut
29	127-3035	1	Bend-Inlet
30	127-3036	1	Body-Throttle
31	127-3037	2	Gasket-Throttle
32	125-7209	2	Bolt
33	125-7211	4	Bolt
34	127-3177	2	Bolt

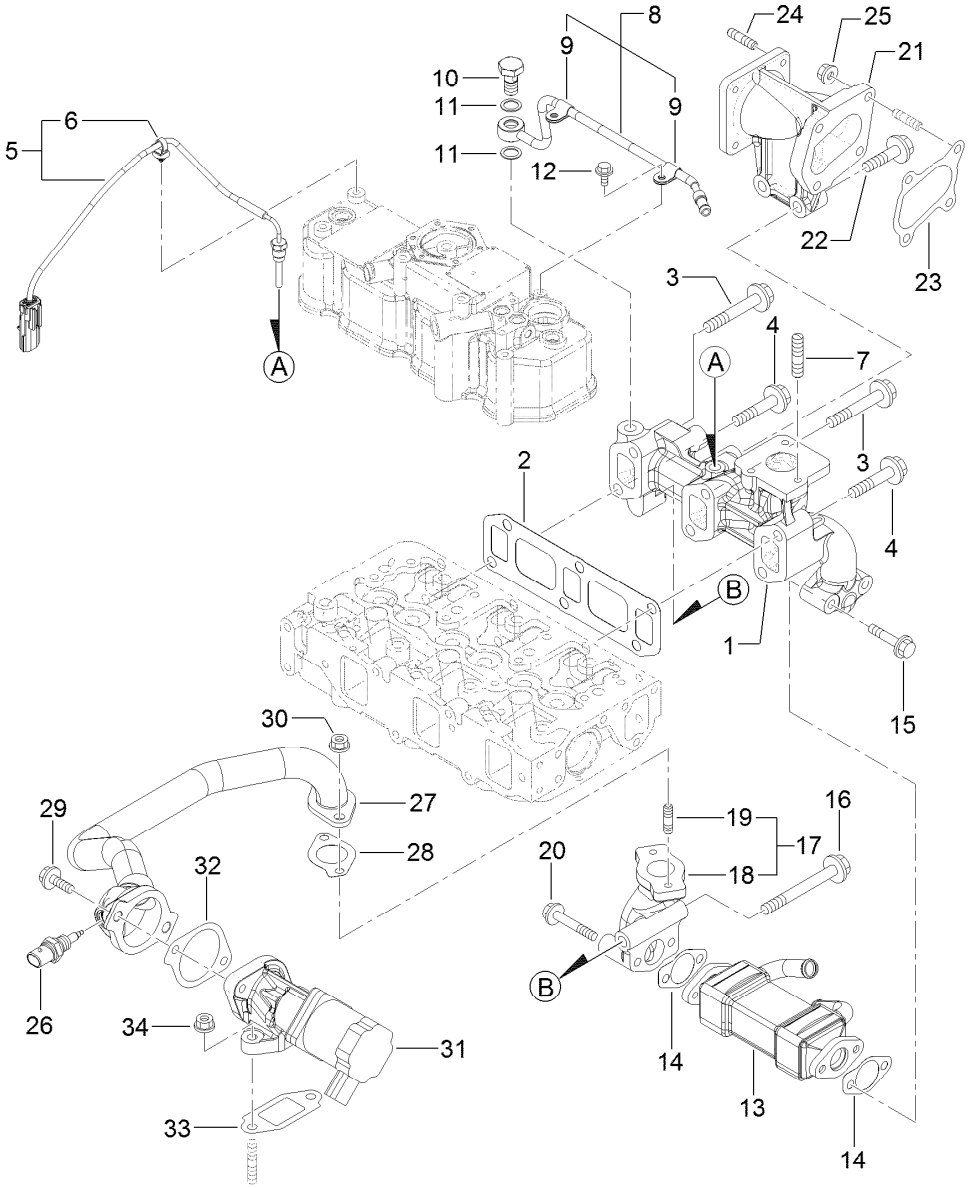

Exhaust Manifold Assembly

Ref.	Part Number	Qty.	Description
1	127-3774	1	Manifold-Exhaust
2	127-3775	1	Gasket-Manifold, Exhaust
3	127-3776	4	Bolt-Flange
4	127-3094	2	Bolt
5	127-3777	1	Sensor-Temp, Exhaust
6	127-3087	1	Band-Clip
7	125-7043	3	Stud
8	127-3038	1	Exhaust Pipe ASM
9	127-3173	2	Clamp
10	127-3039	1	Bolt-Joint, Pipe
11	127-3174	2	Gasket
12	125-7206	2	Bolt
13	127-3042	1	Cooler-E G R
14	127-3043	2	Gasket-Cooler, E G R
15	127-2976	2	Bolt
16	127-3022	1	Bolt-Flange
17	127-3048	1	E G R Pipe ASM

Ref.	Part Number	Qty.	Description
18	127-3049	1	Pipe-Out, E G R
19	125-7043	2	Stud
20	125-7220	2	Bolt
21	127-3778	1	Pipe Extension ASM
22	127-3138	2	Bolt-Flange
23	127-3779	1	Gasket-Out, T C
24	125-6906	4	Stud
25	125-7229	4	Nut
26	127-3047	1	Sensor-Gas Temp, E G R
27	127-3780	1	E G R Pipe ASM
28	127-3016	1	Gasket
29	125-7215	2	Bolt
30	125-7229	2	Nut
31	127-3781	1	Valve-E G R
32	127-3050	1	Gasket-Intake Valve, E G R
33	127-3051	1	Gasket-Out Valve, E G R
34	125-7229	2	Nut

Diesel Particulate Filter Assembly

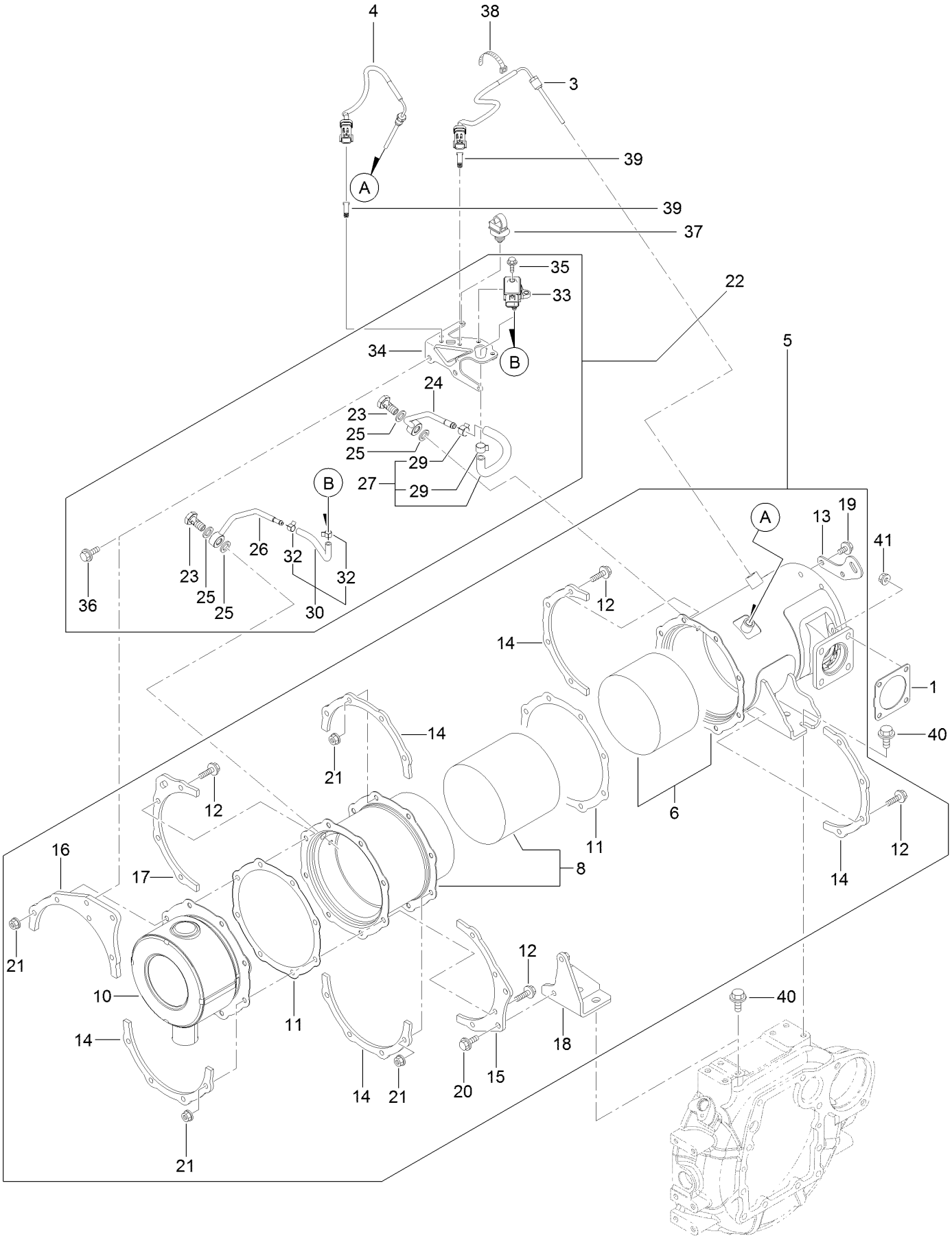

Diesel Particulate Filter Assembly (continued)

Ref.	Part Number	Qty.	Description
1	127-3019	1	Gasket
3	127-4764	1	Sensor-Temp, Exhaust
4	127-3112	1	Sensor-Temp, Exhaust
5	127-3783	1	D P F ASM
6	127-3784	1	Case-D O C
8	127-3785	1	Case-Filter, Soot
10	127-3786	1	Silencer-D P F
11	127-3787	2	Gasket-D P F
12	127-3055	16	Bolt
13	127-3788	1	Lifter-D P F
14	127-3789	5	Stiffener-D P F, A
15	127-3790	1	Stiffener-D P F, B
16	127-3791	1	Stiffener-D P F, C
17	127-3792	1	Stiffener-D P F, C
18	127-3793	1	Stay-D P F
19	125-7213	2	Bolt
20	125-7594	2	Bolt
21	125-7229	16	Nut
22	127-3794	1	Pressure Sensor Unit

Ref.	Part Number	Qty.	Description
23	127-3039	2	Bolt-Joint, Pipe
24	127-3795	1	Pipe-Sensor
25	127-3056	4	Gasket-Sensor
26	127-3796	1	Pipe-Sensor
27	127-3114	1	Exhaust Hose ASM
29	127-3057	2	Clip-Hose
30	127-3059	1	Exhaust Pressure Hose ASM
32	127-3058	2	Clip-Hose
33	127-3060	1	Sensor-Pressure
34	127-3061	1	Bracket-Sensor, Pressure
35	125-7208	2	Bolt
36	125-7595	2	Bolt
37	127-3087	1	Band-Clip
38	127-3124	1	Band
39	127-3088	2	Clip-Connnector
40	127-3179	4	Bolt
41	125-7229	4	Nut

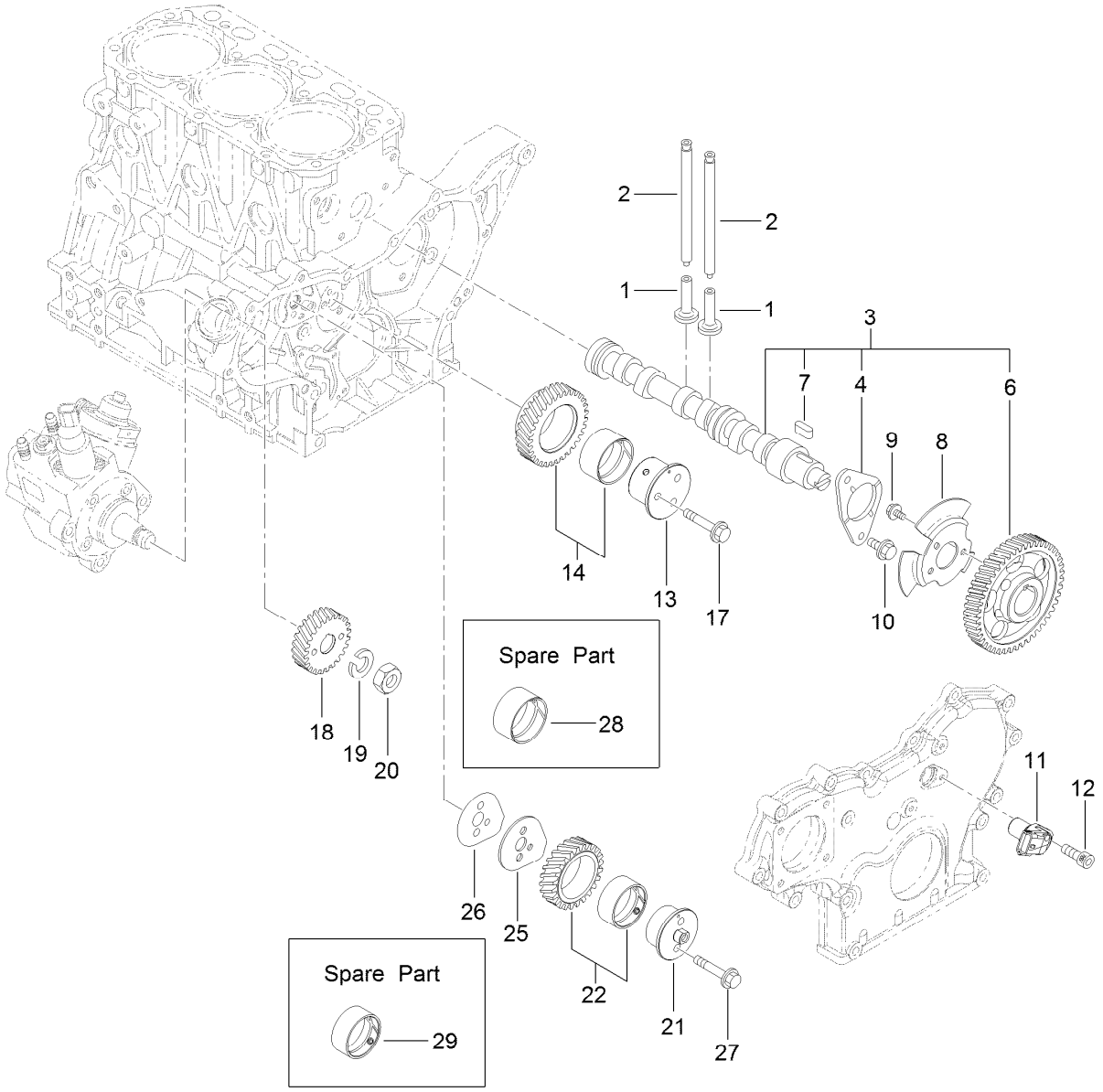

Camshaft and Driving Gear Assembly

Ref.	Part Number	Qty.	Description
1	125-7016	6	Tappet
2	125-7017	6	Rod-Push
3	127-3797	1	Camshaft ASM
4	125-7008	1	Metal-Thrust
6	127-3052	1	Gear-Camshaft
7	125-7185	1	Key
8	127-3053	1	Pulser-Camshaft
9	125-7205	3	Bolt
10	125-7213	2	Bolt
11	127-3054	1	Sensor-Rev, Gear
12	127-3184	1	Bolt
13	127-3063	1	Shaft-Idle, Gear A

Ref.	Part Number	Qty.	Description
14	127-3066	1	Idle Gear A ASM
17	125-7219	3	Bolt
18	127-3070	1	Gear-Pump, Supply
19	127-3167	1	Washer-Spring
20	127-3185	1	Nut-Lock
21	127-3064	1	Shaft-Idle, Gear B
22	127-3067	1	Idle Gear B ASM
25	127-3068	1	Plate-Idle, Shaft
26	127-3069	1	Gasket-Idle, Shaft B
27	125-7218	2	Bolt
28	125-6927	1	Bushing
29	127-3065	1	Bushing

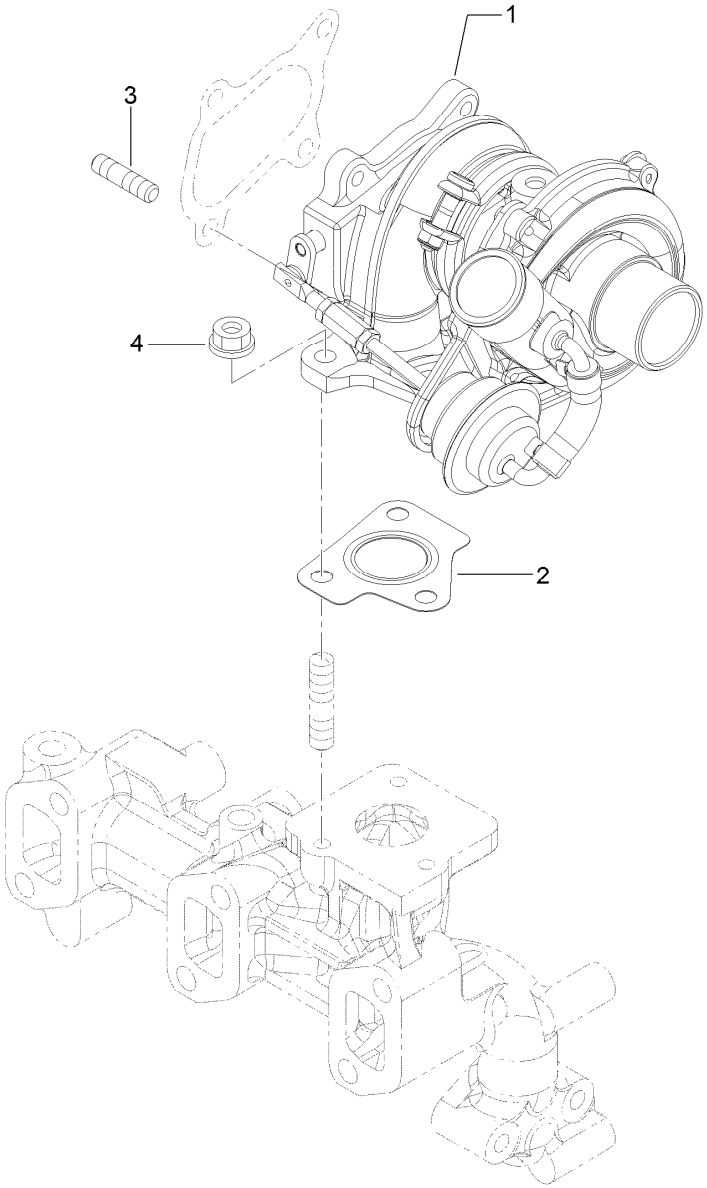

Turbine Assembly

Ref.	Part Number	Qty.	Description
1	127-3798	1	R H F 3 Turbine ASM
2	127-3799	1	Gasket-In, T C
3	125-6906	4	Stud
4	125-7229	3	Nut

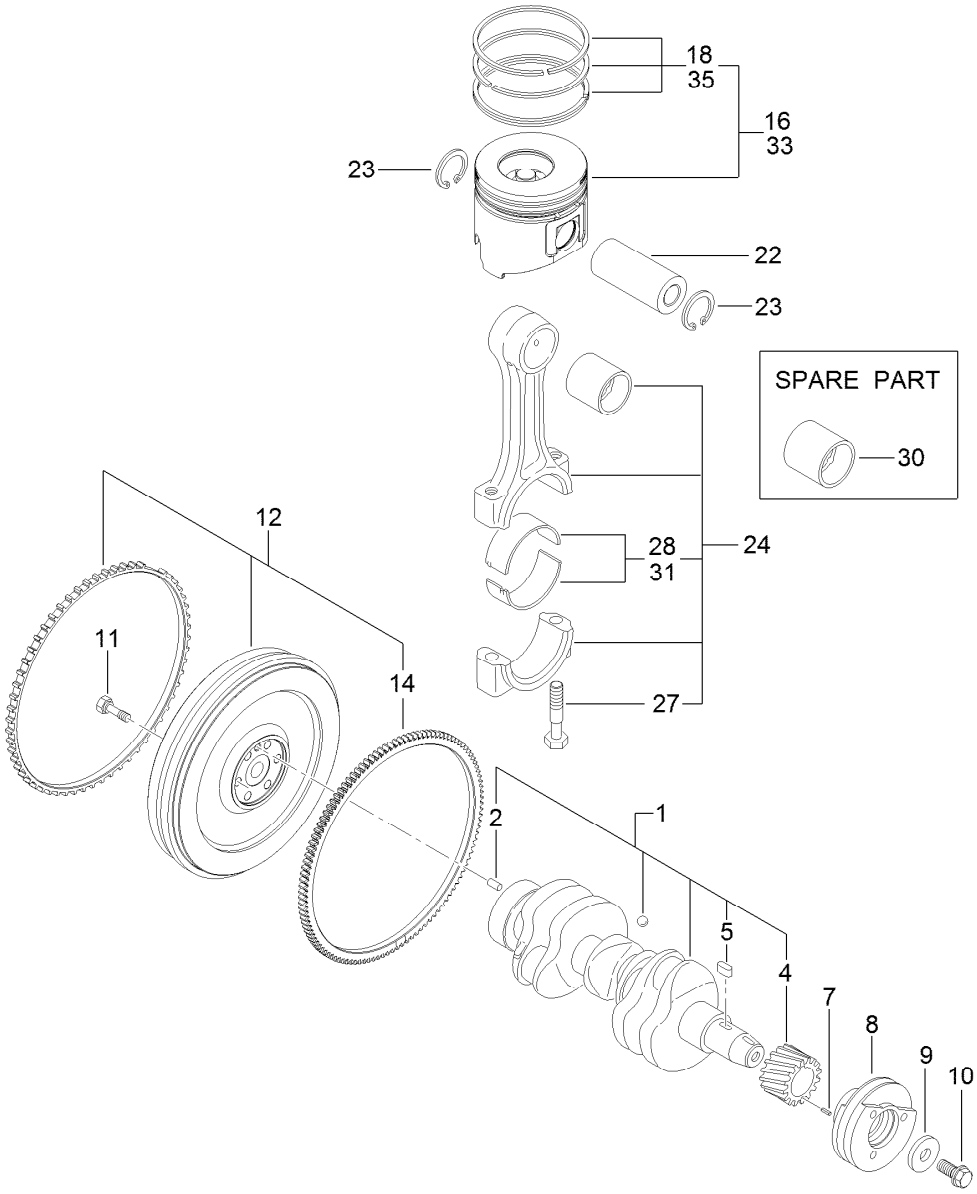

Crankshaft and Piston Assembly

Ref.	Part Number	Qty.	Description
1	127-3800	1	Crankshaft ASM
2	125-6995	1	Pin
4	125-6937	1	Gear
5	125-7185	1	Key
7	125-7182	1	Pin-Spring
8	127-3801	1	Pulley-V
9	125-7109	1	Washer
10	125-6956	1	Bolt
11	125-6951	6	Bolt
12	127-3802	1	Flywheel ASM
14	125-6943	1	Gear

Ref.	Part Number	Qty.	Description
16	127-3097	3	Piston ASM
18	127-3098	3	Piston Ring ASM
22	125-7030	3	Pin
23	125-7180	6	Ring
24	125-7242	3	Connecting Rod ASM
27	125-6955	6	Bolt
28	125-7018	3	Pin-Crank
30	125-6997	3	Pin-Piston
31	125-7019	3	Pin-Crank (.25)
33	127-3099	3	Piston ASM (0.25 O.S.)
35	127-3100	3	Piston Ring ASM (0.25 O.S.)

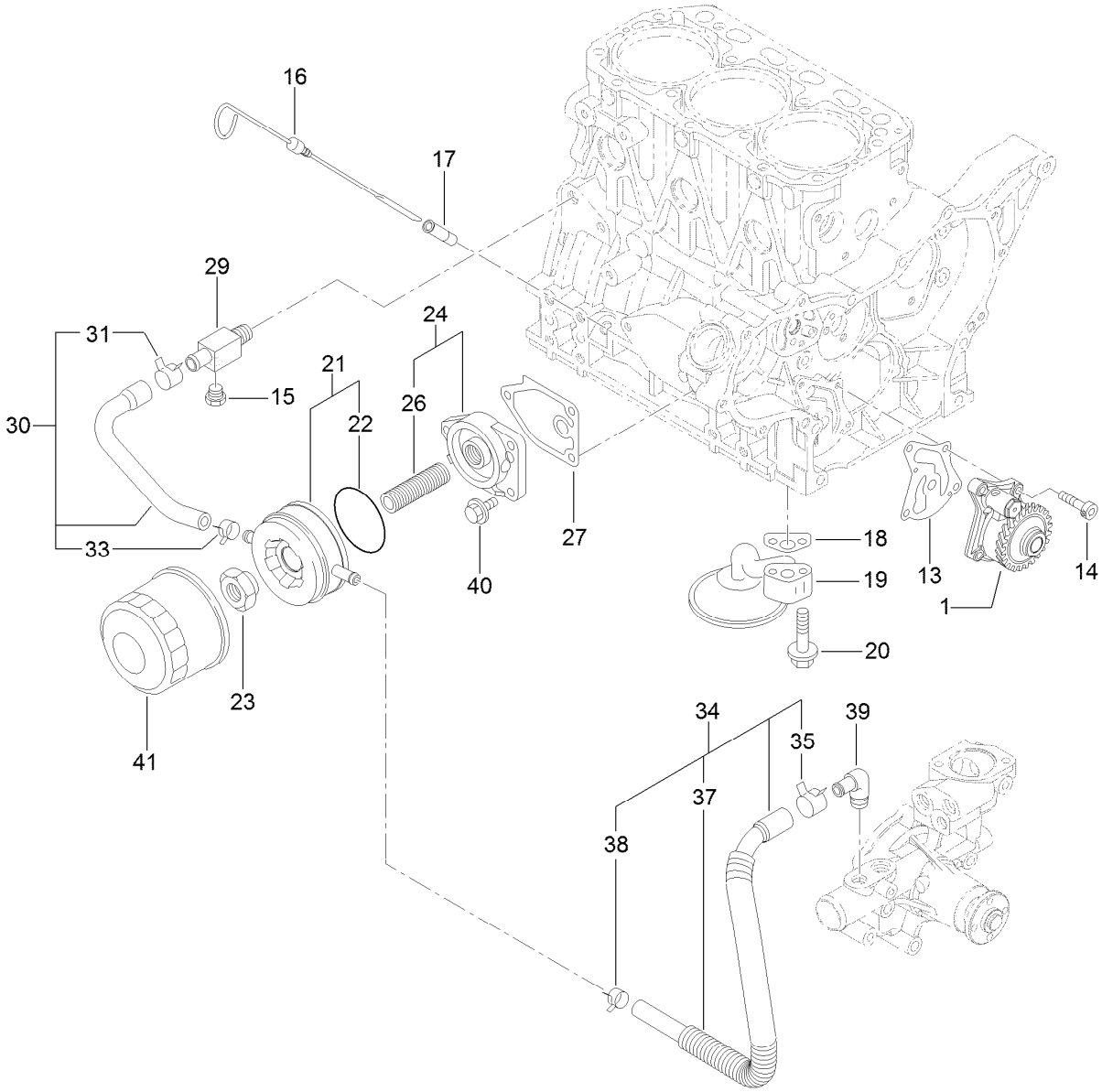

Lubrication and Oil System Assembly

Ref.	Part Number	Qty.	Description
1	127-3101	1	Oil Lube Pump ASM
13	127-3004	1	Gasket
14	125-7232	4	Bolt
15	125-7171	1	Plug-Drain
16	125-6987	1	Dipstick
17	125-6954	1	Guide-Dipstick
18	125-7022	1	Gasket
19	127-3803	1	Pipe ASM
20	125-7217	2	Bolt
21	125-7074	1	Cooler ASM
22	125-7075	1	O-Ring
23	125-7041	1	Nut-Cooler, Oil
24	125-6989	1	Bracket ASM

Ref.	Part Number	Qty.	Description
26	125-7042	1	Stud
27	125-7024	1	Gasket
29	125-6990	1	Joint
30	125-7078	1	Pipe ASM
31	125-7162	1	Clip
33	125-7191	1	Clamp-Hose
34	127-3804	1	Pipe ASM
35	125-7162	1	Clip
37	127-3805	1	Tube
38	125-7191	1	Clamp-Hose
39	125-7001	1	Elbow
40	125-7595	3	Bolt
41	125-7025	1	Filter-Engine, Oil

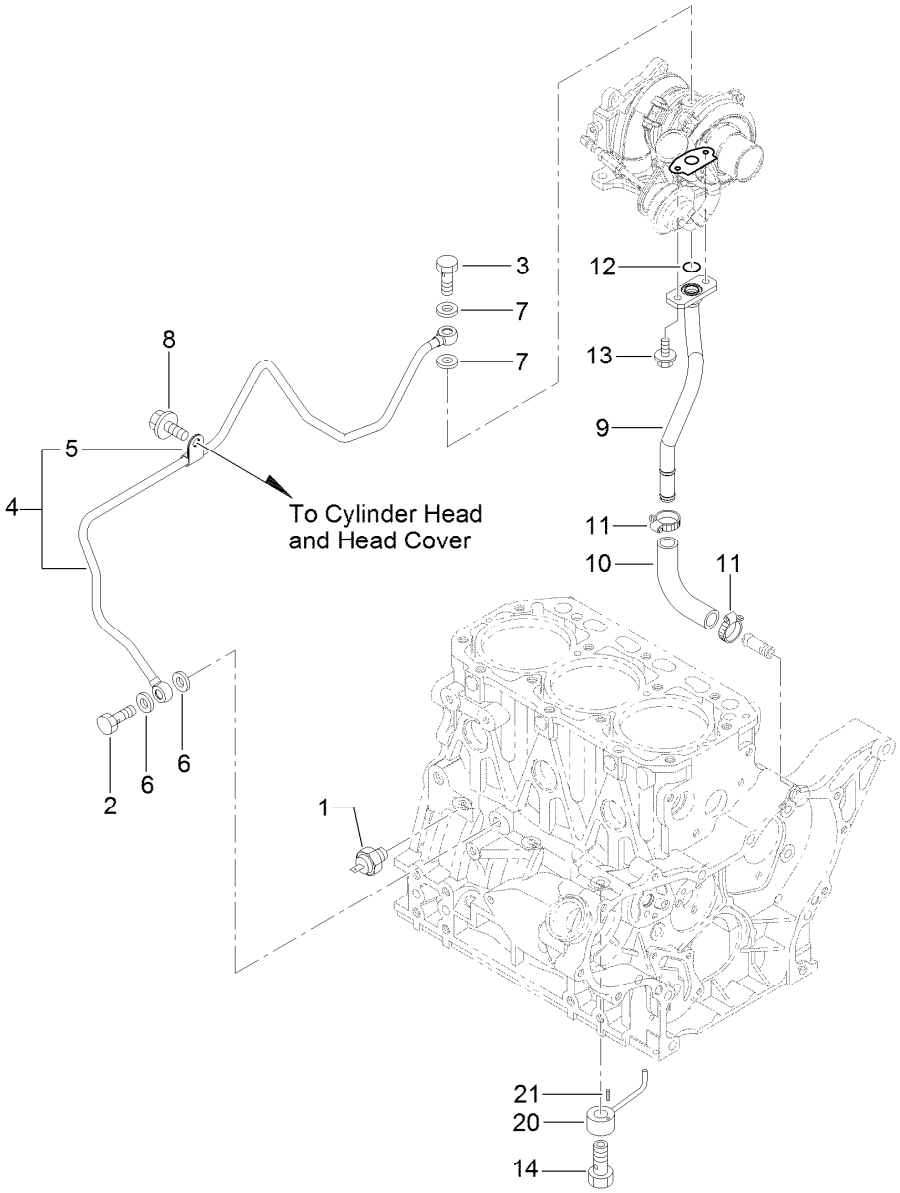

Lubrication Oil Line Assembly

Ref.	Part Number	Qty.	Description
1	125-6918	1	Switch-Oil
2	125-6975	1	Bolt-Joint, Pipe
3	125-6952	1	Bolt-Joint, Pipe
4	127-3806	1	Lube Oil Pipe ASM
5	125-6976	1	Retainer
6	125-7175	2	Washer-Seal
7	125-7193	2	Gasket
8	93-0362	1	Bolt

Ref.	Part Number	Qty.	Description
9	127-3807	1	Pipe-Return, Lube Oil
10	127-3808	1	Joint
11	127-3169	2	Clamp-Hose
12	125-7198	1	O-Ring
13	125-7208	2	Bolt
14	125-7105	3	Check Valve ASM
20	125-7098	3	Nozzle
21	125-7182	3	Pin-Spring

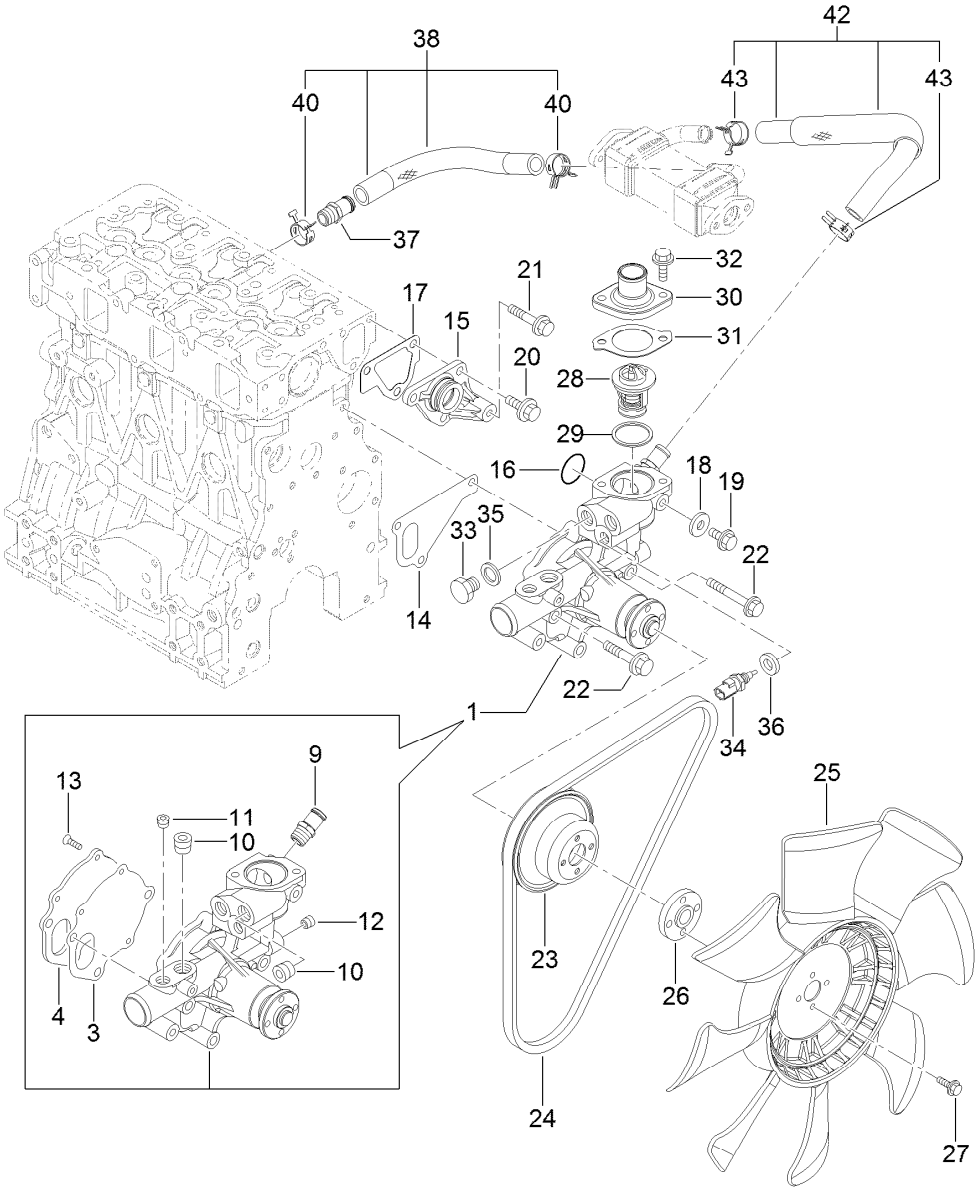

Cooling Water System Assembly

Ref.	Part Number	Qty.	Description
1	127-3071	1	Water Pump ASM
3	125-6998	1	Gasket
4	125-6999	1	Plate
9	127-3017	1	Joint
10	125-7123	2	Plug
11	127-3175	1	Plug
12	125-7195	1	Plug
13	125-7234	3	Screw
14	125-7047	1	Gasket
15	125-6986	1	Joint
16	125-7048	1	O-Ring
17	125-6978	1	Gasket
18	125-7192	1	Gasket
19	93-0362	1	Bolt
20	125-7214	3	Bolt
21	125-7219	1	Bolt
22	125-7222	3	Bolt
23	125-7039	1	V-Pulley

Ref.	Part Number	Qty.	Description
24	127-2998	1	V-Belt
25	127-3809	1	Fan
26	127-3810	1	Spacer
27	125-7209	4	Bolt
28	125-7029	1	Thermostat
29	125-7026	1	Gasket
30	125-7034	1	Cover
31	125-7110	1	Gasket
32	125-7594	2	Bolt
33	125-6953	1	Plug
34	125-7124	1	Sensor-Thermostat, CW
35	125-6979	1	Gasket
36	125-7176	1	Washer-Seal
37	127-3017	1	Joint
38	127-3072	1	Water In Pipe ASM
40	127-3020	2	Clip-Hose
42	127-3811	1	CW Pipe ASM
43	127-3020	2	Clip-Hose

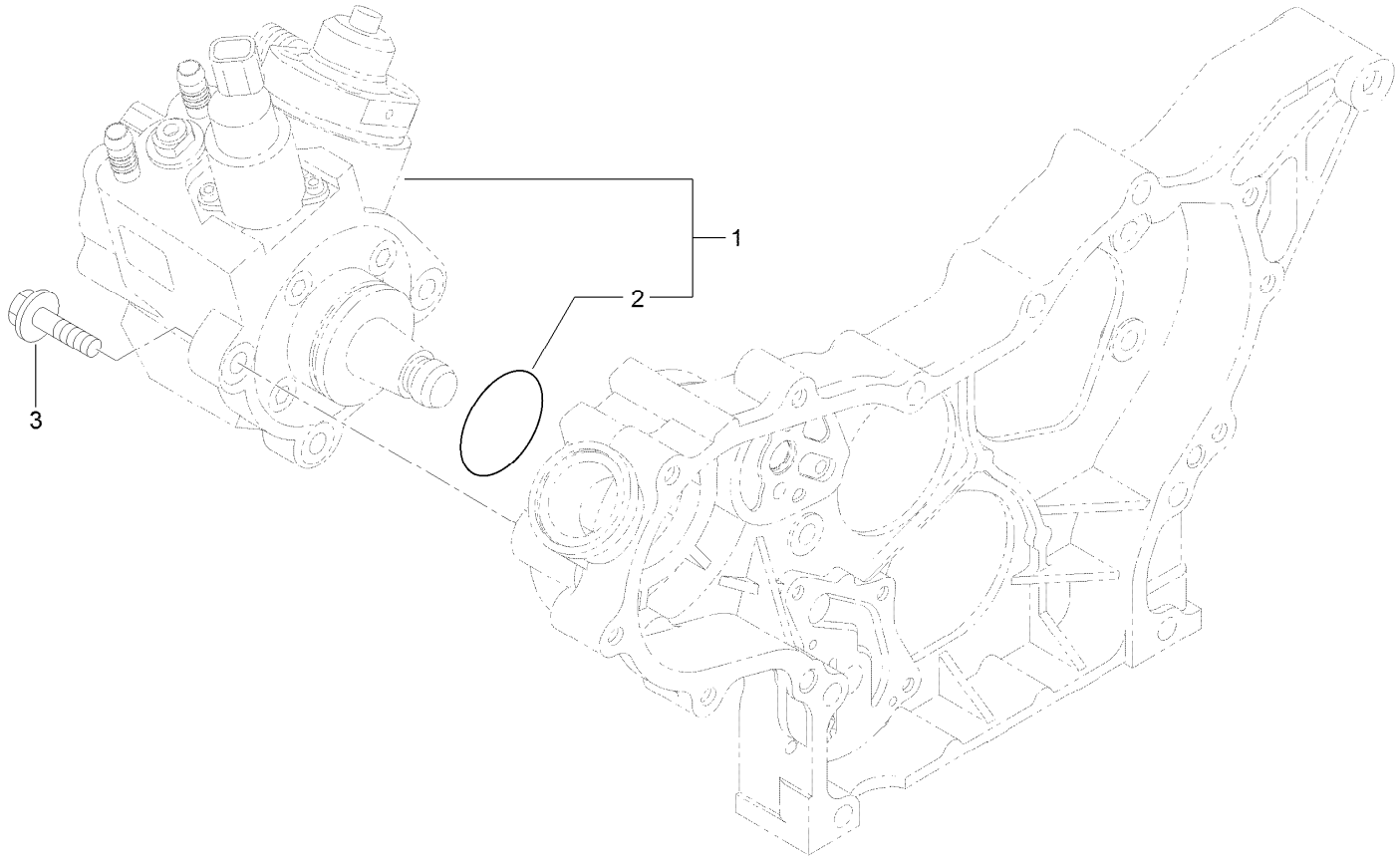

Fuel System Assembly

Ref.	*Part Number*	*Qty.*	*Description*
1	127-3073	1	Fuel Pump ASM
2	127-3074	1	O-Ring
3	125-7216	3	Bolt

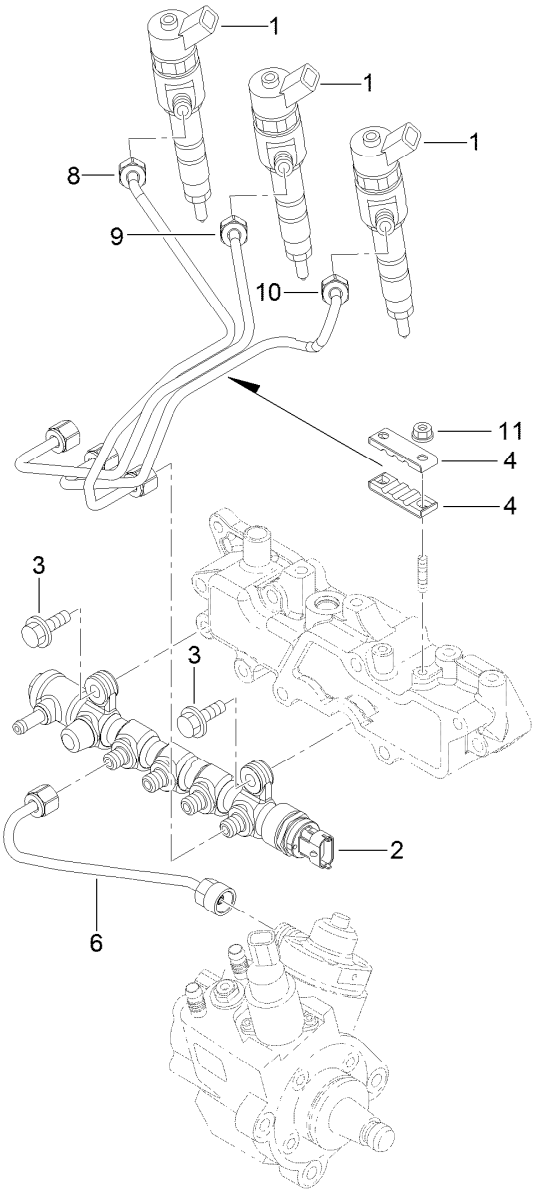

Fuel Injection Valve Assembly

Ref.	*Part Number*	*Qty.*	*Description*
1	127-3104	3	Injector ASM
2	127-3812	1	Rail ASM
3	125-7215	2	Bolt
4	127-3813	2	Retainer
6	127-3082	1	Rail In Pipe ASM
8	127-3814	1	Injection Pipe ASM
9	127-3083	1	Injection Pipe ASM
10	127-3084	1	Injection Pipe ASM
11	125-7231	2	Nut

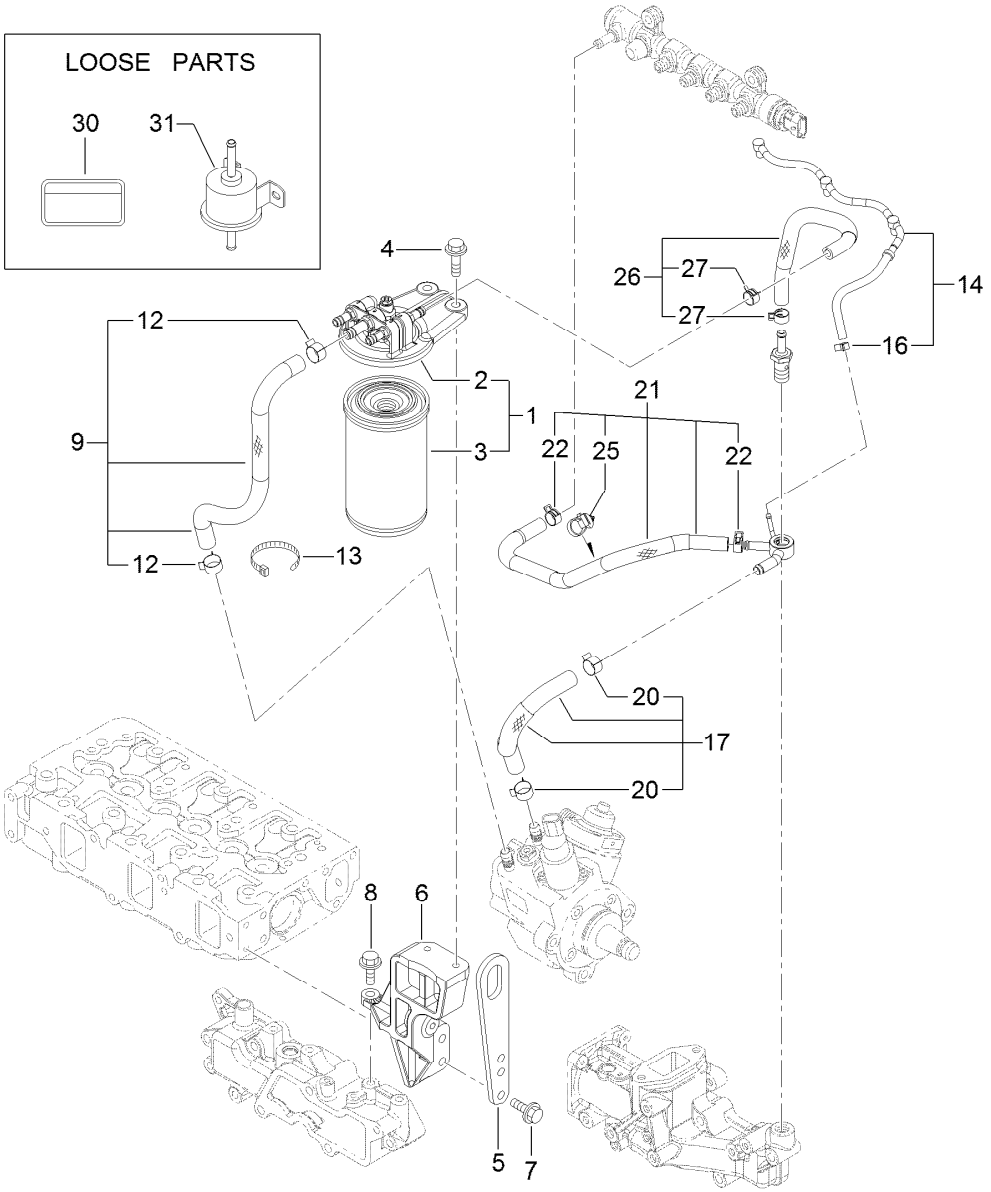

Fuel Line Assembly

Ref.	Part Number	Qty.	Description
1	127-3075	1	Fuel/Oil Filter ASM
2	127-3076	1	Fuel/Oil Filter Bracket ASM
3	125-8752	1	Filter-Fuel/Oil
4	125-7216	2	Bolt
5	125-7111	1	Lifter
6	127-3815	1	Filter Bracket ASM
7	125-7215	2	Bolt
8	125-7215	1	Bolt
9	127-3077	1	Fuel Pipe ASM
12	125-7191	2	Clamp-Hose
13	127-2981	1	Band

Ref.	Part Number	Qty.	Description
14	127-3816	1	Fuel/Oil Return Pipe ASM
16	127-3172	1	Clamp-Hose
17	127-3078	1	Fuel Pipe ASM
20	125-7191	2	Clamp-Hose
21	127-3817	1	Fuel Pipe ASM
22	127-2950	2	Clip-Hose
25	127-3087	1	Band-Clip
26	127-3079	1	Fuel Pipe ASM
27	127-2950	2	Clip-Hose
30	125-6900	1	Label-Caution, Fuel Oil
31	121-5613	1	Pump-Fuel, Electric

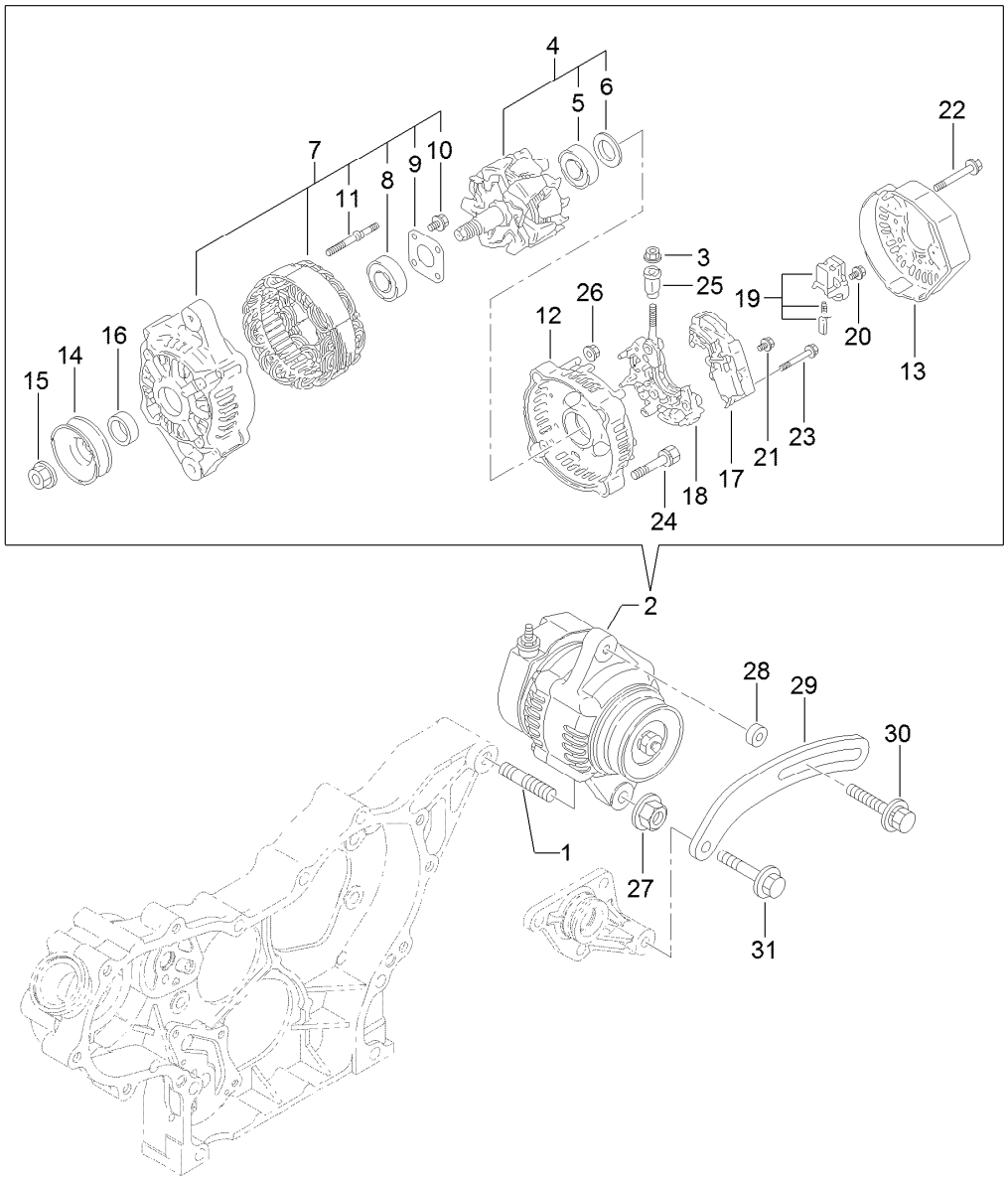

Generator Assembly

Ref.	Part Number	Qty.	Description
1	127-3011	1	Stud
2	127-3841	1	Generator
3	127-3842	1	Nut
4	127-3843	1	Rotor ASM
5	127-2983	1	Bearing-Ball
6	127-2962	1	Cover
7	127-3844	1	Frame ASM
8	127-2958	1	Bearing-Ball
9	127-2959	1	Plate-Retainer
10	127-2960	4	Screw
11	127-2961	2	Stud
12	127-3845	1	Frame
13	127-3846	1	Cover
14	127-2954	1	Pulley
15	127-2955	1	Nut
16	127-2957	1	Collar

Ref.	Part Number	Qty.	Description
17	127-3847	1	Regulator ASM
18	127-3848	1	Holder
19	127-2993	1	Holder
20	127-2965	6	Screw
21	127-2966	1	Screw
22	127-2967	3	Bolt
23	127-2968	2	Screw
24	127-2969	2	Bolt
25	127-2970	1	Bushing-Insulation
26	127-2971	2	Nut
27	125-7230	1	Nut
28	125-6947	1	Spacer
29	127-2977	1	Adjuster
30	125-7134	1	Bolt
31	125-7219	1	Bolt

Starting Motor Assembly

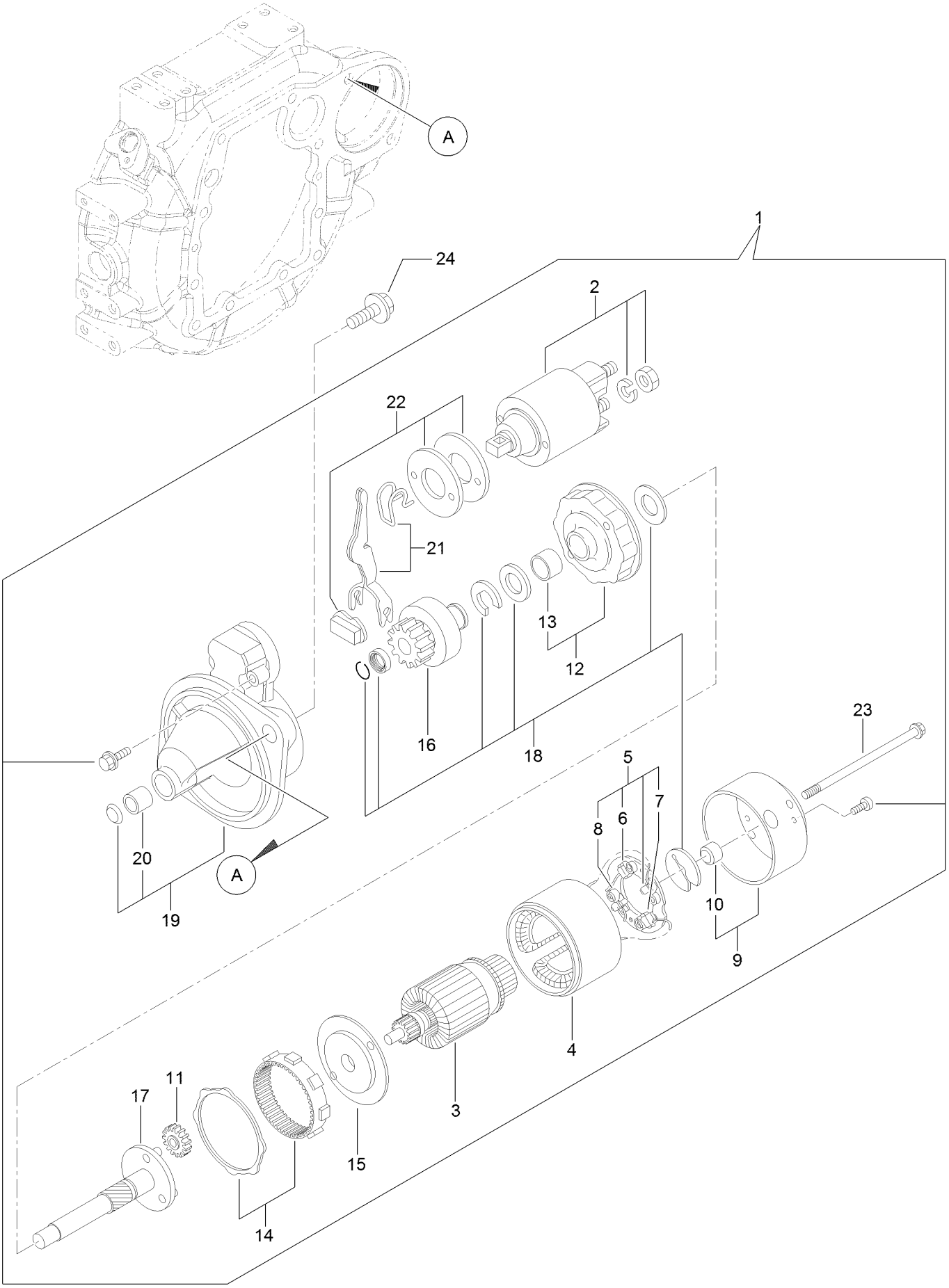

Starting Motor Assembly (continued)

Ref.	Part Number	Qty.	Description
1	127-3818	1	Starter ASM
2	127-3819	1	Switch ASM
3	127-3820	1	Armature ASM
4	127-3821	1	Yoke ASM
5	127-3822	1	Brush Holder ASM
6	127-3823	2	Brush
7	127-3824	1	Brush Set
8	127-3825	4	Spring
9	127-3826	1	Cover ASM
10	127-3827	1	Metal
11	127-3828	3	Gear
12	127-3829	1	Bracket
13	127-3830	1	Bracket
14	127-3831	1	Gear
15	127-3832	1	Bracket
16	127-3833	1	Pinion ASM
17	127-3834	1	Shaft
18	127-3835	1	Washer Set
19	127-3836	1	Case ASM
20	127-3837	1	Metal-Starter
21	127-3838	1	Lever Set
22	127-3839	1	Dust Cover ASM
23	127-3840	2	Bolt-Through
24	125-7225	2	Bolt

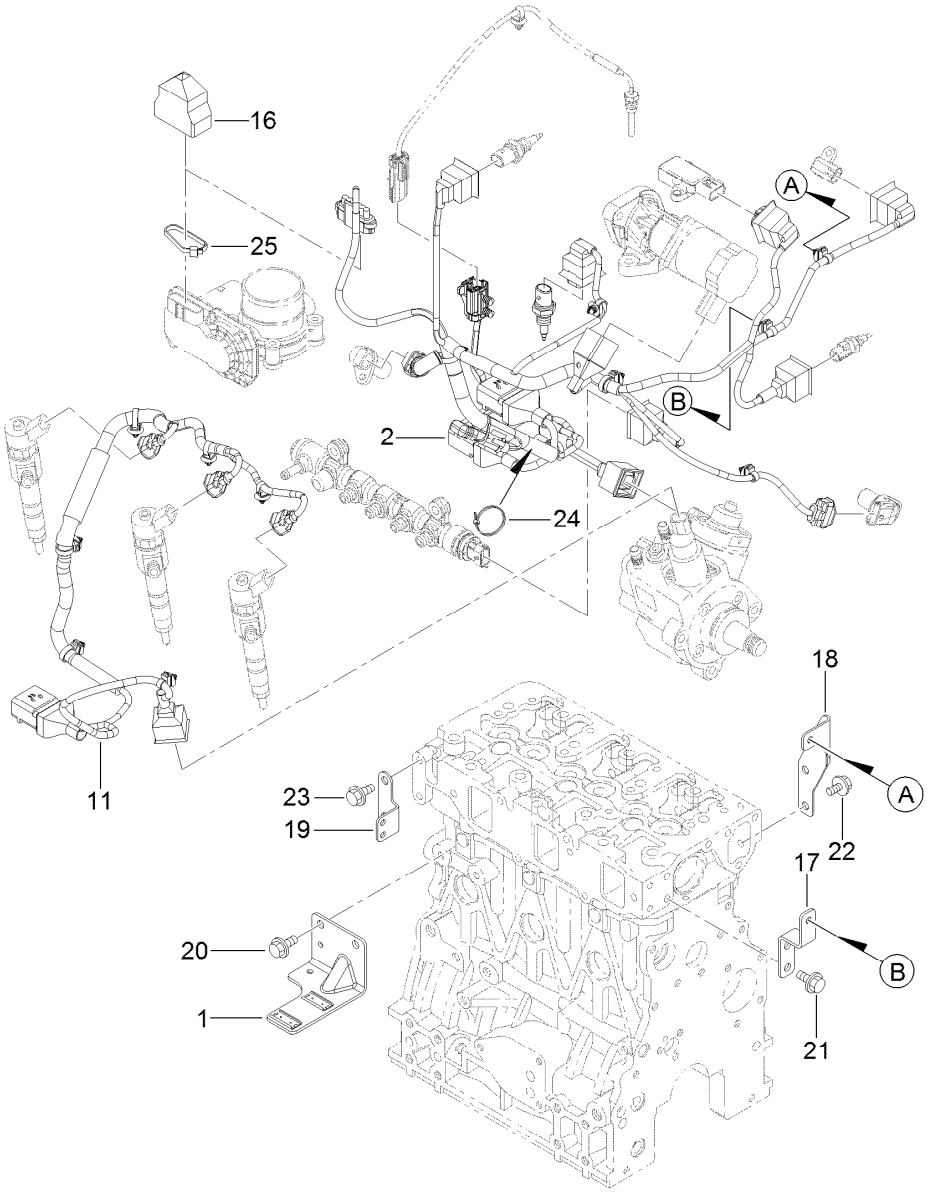

Electric Parts Assembly

Ref.	Part Number	Qty.	Description
1	127-3086	1	Bracket-Connector
2	127-3850	1	Harness B-Engine, E C O
11	127-3851	1	Harness
16	127-3089	1	Boot-Type, Cap
17	127-3852	1	Bracket-Harness
18	127-3853	1	Bracket-Harness
19	127-3090	1	Bracket-Harness
20	93-0362	2	Bolt
21	93-0362	2	Bolt
22	93-0362	2	Bolt
23	93-0362	2	Bolt
24	127-3187	1	Band
25	127-3188	1	Band

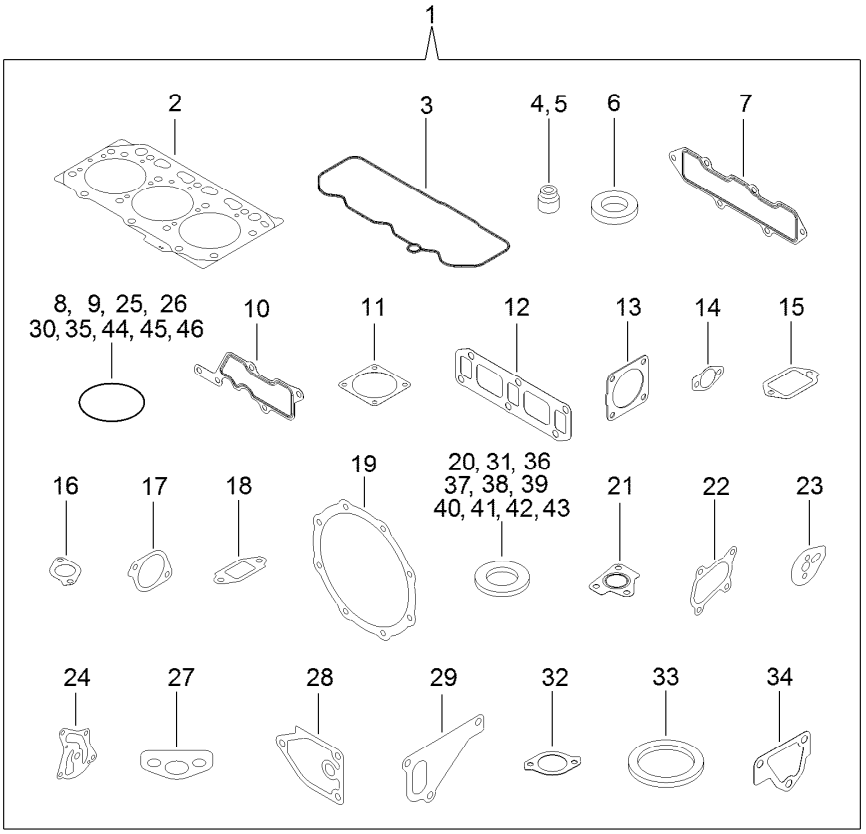

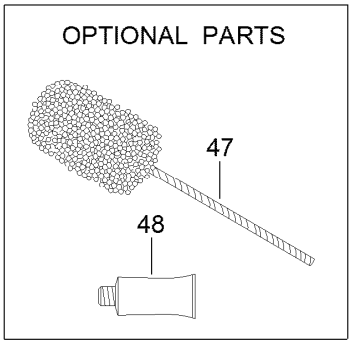

Gasket Set

Ref.	Part Number	Qty.	Description
1	127-3854	1	Gasket Kit
2	127-3751	1	Head Gasket ASM
3	127-3762	1	Gasket-Cover, Cylinder Head
4	127-2986	3	Seal-Stem, Valve
5	127-3027	3	Seal-Stem, Valve
6	127-3021	3	Gasket-Injector
7	127-3769	1	Gasket-Manifold, Intake
8	127-3032	2	O Ring-Sensor, Pressure
9	127-3033	1	O-Ring
10	127-3034	1	Gasket-Collector
11	127-3037	2	Gasket-Throttle
12	127-3775	1	Gasket-Manifold, Exhaust
13	127-3019	1	Gasket
14	127-3043	2	Gasket-Cooler, E G R
15	127-3046	1	Gasket-E G R
16	127-3016	1	Gasket
17	127-3050	1	Gasket-Intake Valve, E G R
18	127-3051	1	Gasket-Out Valve, E G R
19	127-3787	2	Gasket-D P F
20	127-3056	4	Gasket-Sensor

Ref.	Part Number	Qty.	Description
21	127-3799	1	Gasket-In, T C
22	127-3779	1	Gasket-Out, T C
23	127-3069	1	Gasket-Idle, Shaft B
24	127-3004	1	Gasket
25	125-6909	2	O-Ring
26	127-2973	1	O-Ring
27	125-7022	1	Gasket
28	125-7024	1	Gasket
29	125-7047	1	Gasket
30	125-7048	1	O-Ring
31	125-6979	1	Gasket
32	125-7110	1	Gasket
33	125-7026	1	Gasket
34	125-6978	1	Gasket
35	127-3074	1	O-Ring
36	125-7174	1	Washer-Seal
37	125-7175	2	Washer-Seal
38	125-7176	1	Washer-Seal
39	127-3166	2	Washer-Seal
40	125-7177	1	Washer-Seal
41	125-7192	1	Gasket

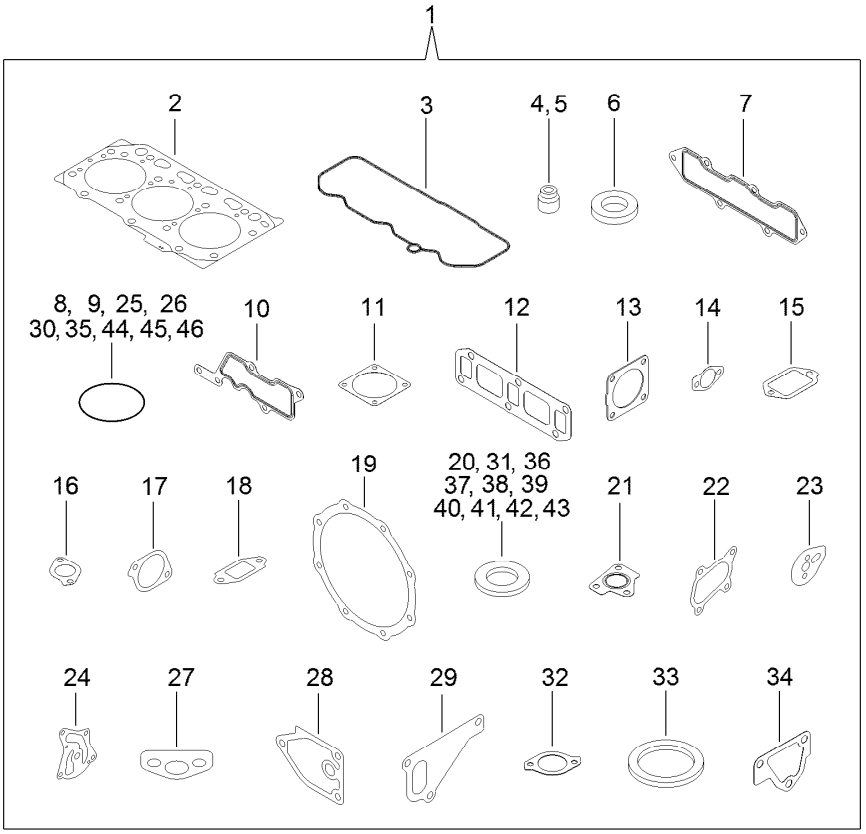

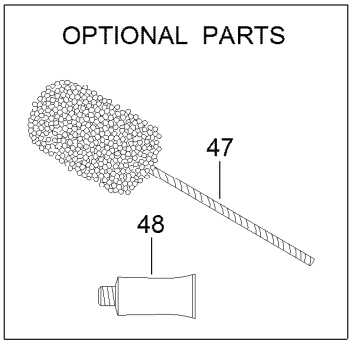

Gasket Set (continued)

Ref.	Part Number	Qty.	Description
42	125-7193	2	Gasket
43	127-3174	2	Gasket
44	93-0418	3	O-Ring
45	125-7197	3	O-Ring
46	125-7198	1	O-Ring
47	125-7038	1	Hone
48	125-7248	1	Gasket-Liquid

Attachments and Accessories

For 30864 Groundsmaster 4300-D Traction Unit

Product Name	Model/Part
Air Ride Seat Suspension Kit	03667
Wheel Weight Kit	104-1478
Premium All Season Hydraulic Fluid (55 Gallon Drum)	108-1177
Premium All Season Hydraulic Fluid (5 Gallon Pail)	108-1178
Premium All Purpose Grease (Tube)	108-1190
Filter-Air	108-3810
22in Combo Blade	108-7395-03
ROPS Extension Kit	110-8030
Operator Fan Kit - US Sales Only, 3in ROPS Post	110-8804
Weight Plate	110-8985-03
22in High Lift Blade	114-0434-03
22in Atomic Blade	114-0435-03
Roller Scraper Kit	117-0149
Mulching Kit	117-0185
22in Angle Sail Blade	117-0209-03
Hydraulic Hose Kit	117-0289
22in Rotary Cutting Unit Sectional Roller ASM	117-0297
Premium Synthetic Bio-Degradable Hydraulic Fluid (5 Gallon Pail)	119-2157
Premium Synthetic Bio-Degradable Hydraulic Fluid (55 Gallon Drum)	119-2158
Service Pack-Combo Blade	119-6957
Large Seat Cover	120-5179
Premium Engine Oil 10w30 (55 Gallon Drum)	121-6392
Premium Engine Oil 10w30 (5 Gallon Pail)	121-6393
Canopy Completion Kit	130-5895
MVP Filter Kit	30093
Universal Sunshade	30349
22in Rotary Cutting Unit	30845
Spark Arrestor	98-9099

TORO®

Count on it.