TORO®

Form No. 3319-391 Rev A
Lawn Vacuum
Model: 53080
S/N 790001 & Up

■ OPERATION ■ SERVICE ■ CARE

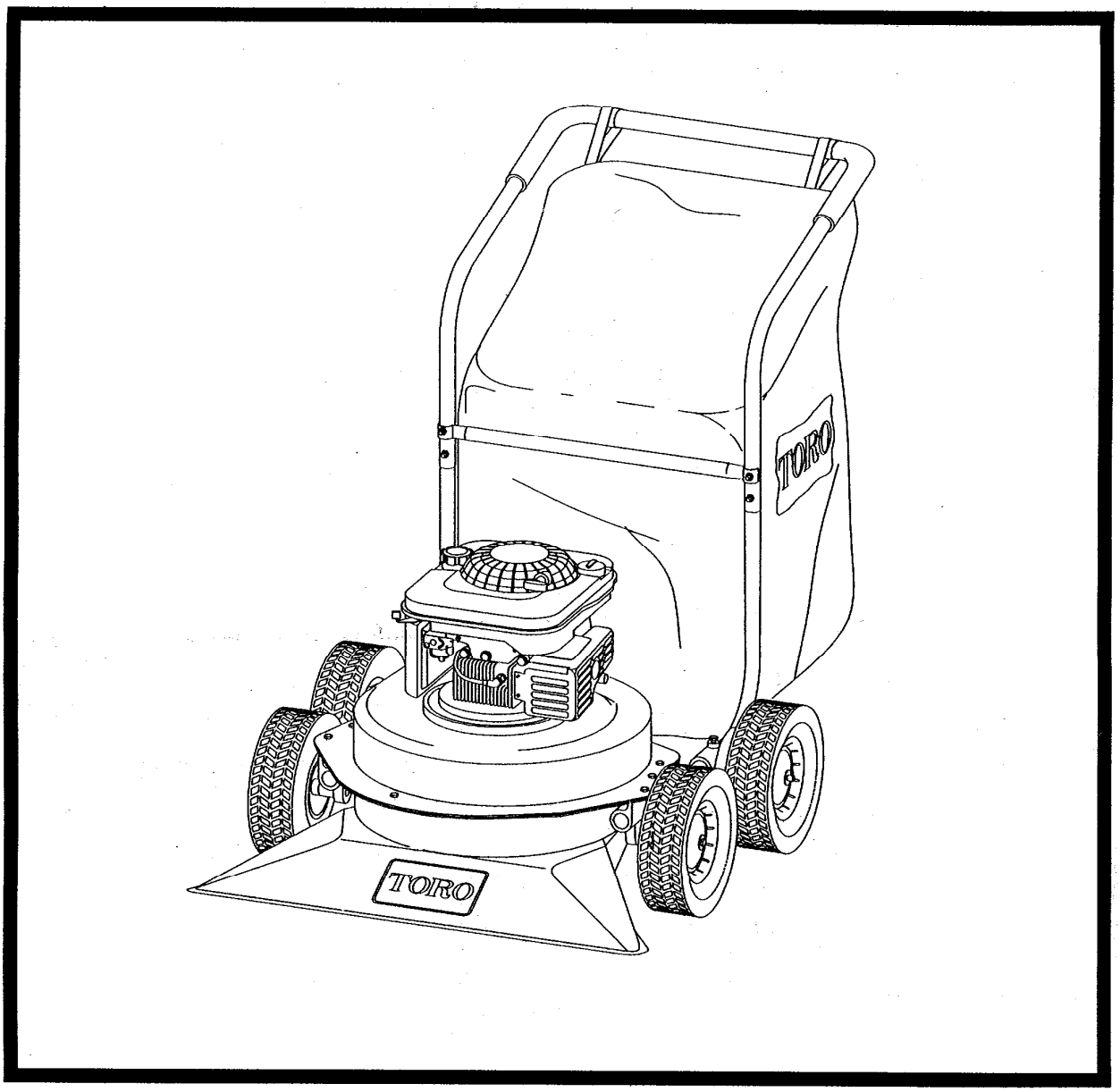

TABLE OF CONTENTS

General Safety Instructions	1 & 2
Warning Decal Placement	3
Assembly & Operation Instructions	4
Maintenance	5
Handle Assembly	6 & 7
Housing Assembly	8
Warranty	Back Cover

SOUND		VIBRATION
97 dB Operator	88 dB At 3m	14.5 m/s At Operators Handles

Tests were conducted on 4/3/95 with calibrated sound and vibration equipment under the conditions noted below:

General Condition:	Cloudy	Wind:	8 km/hr
Temperature:	15C	Humidity:	85%
Barometric Pressure:	30.1		

Model # _____ Serial # _____

IMPORTANT SAFETY INSTRUCTIONS

READ ALL INSTRUCTIONS BEFORE USING

WARNING

- To prevent personal injury or property damage, do not attempt to start engine until all assembly steps are complete and you have read and understand the safety and operating instructions in this manual.
- Under California, and under laws of several other states, you are not permitted to operate internal combustion's engine using hydrocarbon fuels on any forest covered, brush covered, or grass covered land, or on land with grain, hay, or other flammable agricultural crop, without an engine spark arrester in continuous effective working order.
  The engine on your power equipment, like most outdoor power equipment, is an internal combustion engine that burns gasoline, a hydrocarbon fuel. Therefore, your power equipment must be equipped with a spark arrester muffler in continuous effective working order. The spark arrester must be attached to the engine exhaust system in such a manner that flames or heat from the system will not ignite flammable material. Failure of the owner/operator of the equipment to comply with this regulation is a misdemeanor under California law, and may also be a violation of other state and/or federal regulations, laws, ordinances, or codes. Contact your local fire marshal or forest service for specific information about what regulations apply in your area.
- Wear approved safety glasses when operating this equipment. The operation of any powered machine can result in foreign objects being thrown by high-speed rotating parts.
- Wear work gloves, sturdy footwear, and hearing protection when operating this equipment.
- Remove hearing protection and watch for traffic when operating near, or when crossing roadways.
- Do not operate this equipment unless the collection bag is installed. Discharged material may bounce from a hard surface.
- Before inspecting or servicing any part of equipment, shut off engine, disconnect spark plug wire from spark plug, and make sure that all moving parts have come to a complete stop. Be aware that rotating blades slow down gradually after engine is shut off.
- Exercise extreme caution on slopes and avoid excessively steep slopes.
- Never leave equipment unattended when engine is running. Shut off engine and disconnect spark plug wire from spark plug before leaving equipment.
- Do not vacuum any burning or smoldering materials such as cigars, cigarettes, ashes or cinders.
- Do not vacuum areas that have been recently treated with fertilizers, pesticides or herbicides. Follow chemical manufacturer's safety instructions regarding contact with treated areas.

- Do not vacuum flammable liquids such as gasoline, kerosene, diesel fuel, paint thinner, etc.
- Never allow children or untrained adults to operate this equipment.
- Keep the area of operation clear of all persons, particularly small children, and pets. Keep bystanders at least 25 feet away from the area of operation.
- Do not run engine in an enclosed area. Engine exhaust contains carbon monoxide gas, a deadly poison that is odorless, colorless, and tasteless. Do not operate this equipment near buildings, windows, or air conditioners.
- Do not allow hands or any other part of the body or clothing inside the vacuum inlet.
- Before removing or installing collection bag, shut off engine, disconnect spark plug wire from spark plug, and allow all moving parts to come to a complete stop.
- If equipment jams or becomes clogged, immediately shut off engine, disconnect spark plug, and allow all moving parts to come to a complete stop. Use only a wooden stick to clear away debris.
- Do not start engine or operate this equipment with any safety guards or housing removed.

DANGER

Gasoline is highly flammable and its vapors are explosive. To prevent personal injury or property damage:

- Do not add fuel if engine is running or still hot from recent operation. Allow engine to cool for at least three minutes.
- Do not fill fuel tank indoors. After filling, wipe up any spills and move away from gasoline fumes before starting engine.
- Do not allow open flame, matches, or smoking in area.
- Fill fuel tank with fresh, clean unleaded regular automotive gasoline, (leaded regular and unleaded or leaded premium grades of gasoline are acceptable substitutes).
- Do not mix oil with gasoline.
- Clean the area around the fuel fill cap and remove the cap from the fuel tank. Insert a clean funnel into the fuel tank.
- Fill the tank to 1/2 inch below the bottom of the filter neck to provide space for any fuel expansion.
- Reinstall the fuel fill cap securely and wipe up any spilled gasoline.

SAVE THESE INSTRUCTIONS

SAFETY DECALS

CAUTION!

DO NOT START ENGINE UNLESS INTAKE HOUSING, DEBRIS DEFLECTOR & DUST BAG ARE SECURED IN PLACE.

98–2517

98–2506

SAFETY INTERLOCK SWITCH
715313

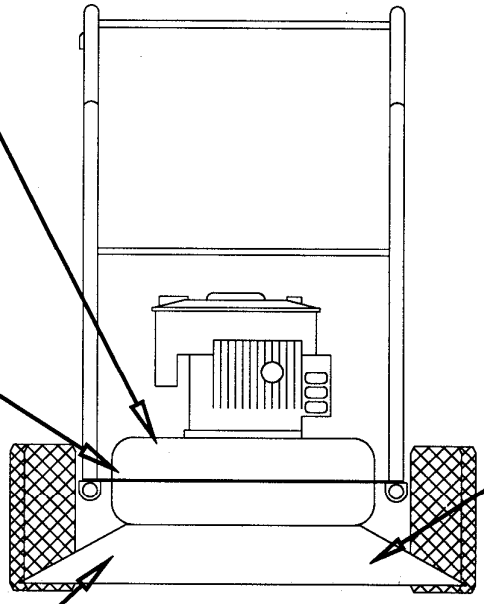

98–2505

DO NOT OPEN OR REMOVE SAFETY SHIELDS WHILE ENGINE IS RUNNING

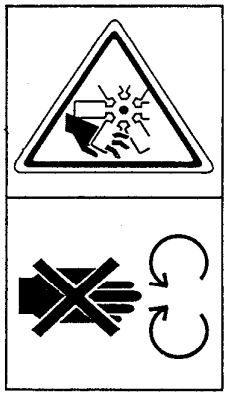

98–2542

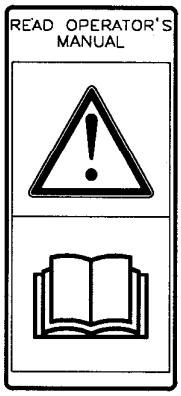

ASSEMBLY INSTRUCTIONS

NOTE: Remove unit from carton. Do not discard any inserts or packing until unit is completely assembled. All mounting hardware is on the unit in its proper location.

TO ASSEMBLE HANDLES

NOTE: The numbers used in the following steps refer to those used in the parts list and exploded view of the Handle and Bag Assembly on Page 6.

1. Remove the four hex hd. bolts (3), lock nuts (4), and the cross brace (2) from the top of the lower handles (14).
2. Slide the upper handle (1) assembly down over the top of the lower handles (14).
3. Reassemble the hardware removed in Step 1, making sure the lower cross brace (14) is assembled to the top holes and bolts.

OPERATING INSTRUCTIONS

READ SAFETY & OPERATING INSTRUCTIONS BEFORE OPERATING EQUIPMENT

ENGINE OPERATION

CAUTION: The engine contains **NO OIL**. Before starting the engine, make sure the crankcase is filled with the proper amount and type of oil. Refer to the Engine Operating Manual for proper lubrication of the engine. Read the Engine Manual carefully before operating unit.

MATERIAL HANDLING

DANGER: Improper use of this equipment may result in serious injury.

1. Heavy concentration of sand and gravel should be avoided. These materials are extremely abrasive, and while the unit will handle moderate amounts of these materials, it is not designed for heavy applications. Because these materials are extremely heavy, only small amounts should be allowed to collect in the bag because large amounts cause poor handling and difficulty in pushing. The unit is capable of picking up empty tin cans and blocks of wood, but it was not intended for this type of service, since tremendous stresses build up as these pieces pass through the impeller. Treat your Lawn Vacuum with reasonable care and it will repay you with long trouble-free service.
2. The Lawn Vacuum will handle most common kinds of debris found around industrial plants, commercial buildings, homes and farms. Acid-contaminated materials, magnesium, dust and other DANGEROUS DEBRIS that is considered hazardous should not be handled with the Lawn Vacuum unless approved by a regulating authority considered to be an expert in the handling of such hazardous material.

HEIGHT ADJUSTMENT

1. Housing height can be adjusted to suit operating conditions by loosening knob located at rear of housing.
2. Slide knob down in adjustment bracket (on rear axle) to raise housing, or up to lower. When desired height is obtained, tighten knob.

MAINTENANCE INSTRUCTIONS

OBSERVE SAFETY RULES AT ALL TIMES. DON'T TAKE CHANCES!

WARNING: DO NOT WORK ON LAWN VACUUM with engine running or idling. Bring to a complete stop. Remove spark plug wire on engine.

1. For servicing and operating instructions for engine refer to Engine Manufacturers Service Manual. Careful attention to care of air cleaner and crankcase lubrication instructions will insure longer engine life. KEEP ENGINE CLEAN.
2. Clean the engine air cleaner every 10 hours of operation. (Do so more often under dusty conditions.) If it is punctured, torn, or uncleanable, it should be replaced.
3. Be sure to keep the oil at the proper level in the engine. Check the oil level each time you fill the fuel tank.
4. To drain the crankcase oil from the engine, please use a siphon pump. To use it, run the engine for a short time to warm the oil and make it flow more easily. Then remove the cap from the filler hole in the engine and insert the plastic tube into the hole. Hold the pump below the bottom of the crankcase and squeeze it several times until oil appears in the tube above the pump, and allow the oil to siphon into a container for disposal. DISPOSE OF PROPERLY.
5. DUST BAG CARE
   a. Keep the dust bag clean at all times. b. To clean the dust bag, turn the bag inside out and reattach to the sweeper. c. Start the engine and run at full throttle. Lightly tap the bag to release the dust trapped in the weave. d. When the bag is clean remove it and turn it right side out again. Reattach to the sweeper and resume sweeping. e. DO NOT wash the dust bag to clean. Washing will shrink the material, reducing air flow through the bag and seriously reduce vacuum.
6. The efficiency of this unit depends on the breathing capacity of the dust bag. Under extremely dusty conditions the bag should be emptied and cleaned frequently. Always empty and clean bag before storing after use. Debris allowed to remain in the bag may cause spontaneous combustion, resulting in an explosion or fire.

SAFETY INTERLOC SYSTEM

This equipment incorporates a Bag Safety Interloc System, Figure 1. When bag assembly is removed and lanyard switchfoot is disconnected from safety switch engine will not start.

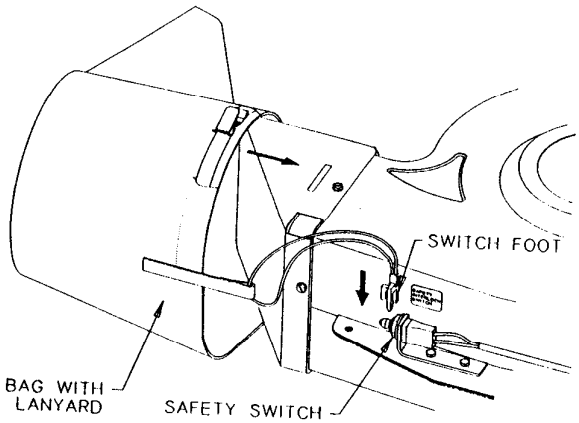

Figure 1

Briggs & Stratton engine wiring schematic.

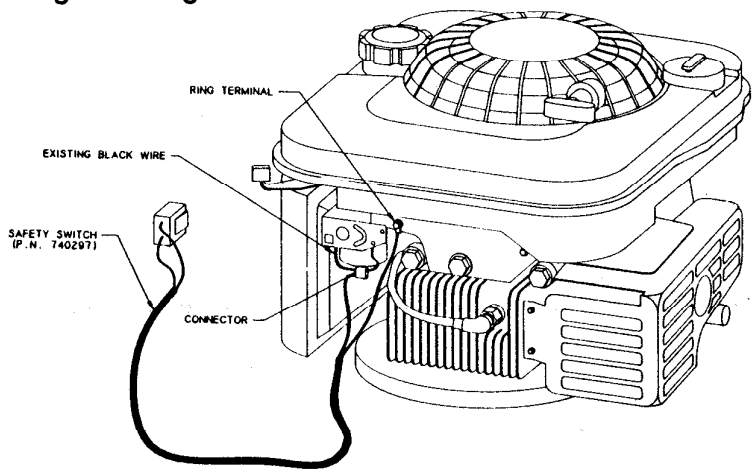

Figure 2

TORO LCG

THE TORO TOTAL COVERAGE GUARANTEE

A One-Year Limited Warranty
(A Two-Year Full Warranty for Residential Use)

What Is Covered By This Express Warranty?

The Toro Company promises to repair any TORO product used for commercial, institutional, or rental purposes if defective in materials or workmanship for a period of one year from the date of purchase. The cost of parts and labor are included, but the customer pays the transportation cost. Transportation within a 15-mile radius of a TORO ProLine Service Dealer is covered under this warranty for Riding Products, Mid-size Mowers and Turf Maintenance Equipment.

What Products Are Covered By This Warranty?

The following products and their attachments are covered by this warranty:

- Z-Master Zero Radius Tractors
- ProLine Mid-size Mowers
- Groundsmaster Riding Mowers
- ProLine Hand-held Gas Products
- Backpack Blowers
- Commercial WPM
- Turf Maintenance Equipment
- Debris Management Equipment

How About Residential Use?

TORO products used for residential use are covered by a full two-year warranty.

How Do You Get Warranty Service?

Should you feel your TORO product contains a defect in materials or workmanship, contact the dealer who sold you the product or any TORO ProLine Service Dealer. The Yellow Pages of your telephone directory is a good reference source; look under TORO Commercial Service Dealers. The Service Dealer will either arrange service at his/her dealership or recommend another authorized Service Dealer who may be more convenient. You may need proof of purchase (copy of registration card, sales receipt, etc.) for warranty validation.

If for any reason you are dissatisfied with a Service Dealer's analysis of the defect in materials or workmanship or if you need a referral to a TORO ProLine Service Dealer, please feel free to contact us at the following address:

Toro Customer Service Department
8111 Lyndale Avenue South
Bloomington, MN 55420–1196
612–888–8801 or 800–348–2424

What Must You Do To Keep The Warranty In Effect?

You must maintain your TORO Product by following the maintenance procedures described in the operator's manual. Such routine maintenance, whether performed by a dealer or by you, is at your expense.

What Does This Warranty Not Cover? and How Does Your State Law Relate To This Warranty?

There is no other express warranty except as described above. This express warranty does not cover:

- Cost of regular maintenance service or parts, such as filters, fuel, lubricants, tune-up parts, blade sharpening, brake and clutch adjustments.
- Any product or part which has been altered or misused or required replacement or repair due to normal wear, accidents, or lack of proper maintenance.
- Repairs necessary due to improper fuel, contaminants in the fuel system, or failure to properly prepare the fuel system prior to any period of non-use over three months.
- Pickup and delivery charges for distances beyond a 15-mile radius from a TORO ProLine Service Dealer.

All repairs covered by this warranty must be performed by a TORO Service Dealer using Toro approved replacement parts.

The Toro Company is not liable for indirect or consequential damages in connection with the use of the TORO Products covered by this warranty, including any cost or expense of providing substitute equipment or service during reasonable periods of malfunction or non-use pending completion of repairs under this warranty. Some states do not allow exclusions of incidental or consequential damages, so the above exclusion may not apply to you.

This warranty gives you specific legal rights, and you may also have other rights which vary from state to state.

COUNTRIES OTHER THAN THE UNITED STATES OR CANADA

Customers who have purchased TORO products exported from the United States or Canada should contact their TORO Distributor (Dealer) to obtain guarantee policies for your country, province, or state. If for any reason you are dissatisfied with your Distributor's service or have difficulty obtaining guarantee information, contact the TORO importer. If all other remedies fail, you may contact us at The Toro Company.