Form No. 3326-660

TORO®

Workman® 1100

Utility Vehicle

07252—210000001 and Up

07252TC—210000001 and Up

Operator’s Manual

Domestic English (EN)

Warning

The engine exhaust from this product contains chemicals known to the State of California to cause cancer, birth defects, or other reproductive harm.

Important The engine in this product is not equipped with a spark arrester muffler. It is a violation of California Public Resource Code Section 4442 to use or operate this engine on any forest-covered, brush-covered, or grass-covered land as defined in CPRC 4126. Other states or federal areas may have similar laws.

This spark ignition system complies with Canadian ICES-002.

Ce système d'allumage par étincelle de véhicule est conforme à la norme NMB-002 du Canada.

Contents

	Page
Introduction	2
Safety	3
Safe Operating Practices	3
Before Operating	3
While Operating	4
Maintenance	6
Sound Pressure Level	7
Vibration Level	7
Slope Chart	9
Safety and Instruction Decals	11
Specifications	13
Setup	14
Loose Parts	14
Installing the Rear Wheels	15
Installing the Front Wheels	15
Installing the Steering Wheel	15
Installing the Bumper	16
Installing the Seats	16
Installing the Hitch	16
Installing the Cargo Box	16
Activating the Battery	17
Checking the Crankcase Oil	18
Checking the Tire Pressure	18
Fuel Tank	18
Operation	19
Think Safety First	19
Controls	19
Pre-Starting Checks	21
Starting the Engine	21
Stopping the Vehicle	21
Parking the Vehicle	21
Cargo Bed	21
Tailgate Latches	22
New Vehicle Break-In	22
Loading the Cargo Box	23
Transporting the Vehicle	23
Towing the Vehicle	23
Trailer Towing	24
Maintenance	25
Recommended Maintenance Schedule	25
Daily Maintenance Checklist	26
Heavy Duty Operation	27
Jacking the Vehicle	27
Checking and Adjusting Neutral	28
Servicing the Engine Oil	28
Cleaning the Engine Cooling Areas	29
Servicing the Air Cleaner	29
Greasing the Machine	30
Servicing the Brakes	31
Inspecting the Tires	31
Adjusting the Front Suspension	31
Servicing the Drive Belt	32
Adjusting the Starter Generator Belt	32
Adjusting Front Wheel Toe-In	33
Servicing the Fuel System	33
Spark Plugs	33
Changing the Transaxle Fluid	34
Replacing the Fuses	35
Replacing the Headlights	35
Servicing the Battery	36
Washing the Vehicle	37
Electrical Schematic	38
The Toro General Commercial Products Warranty	40

Introduction

Read this manual carefully to learn how to operate and maintain your product properly. The information in this manual can help you and others avoid injury and product damage. Although Toro designs and produces safe products, you are responsible for operating the product properly and safely.

Whenever you need service, genuine Toro parts, or additional information, contact an Authorized Service Dealer or Toro Customer Service and have the model and serial numbers of your product ready. Figure 1 illustrates the location of the model and serial numbers on the product.

© 2001 by The Toro Company
8111 Lyndale Avenue South
Bloomington, MN 55420-1196

All Rights Reserved
Printed in the USA

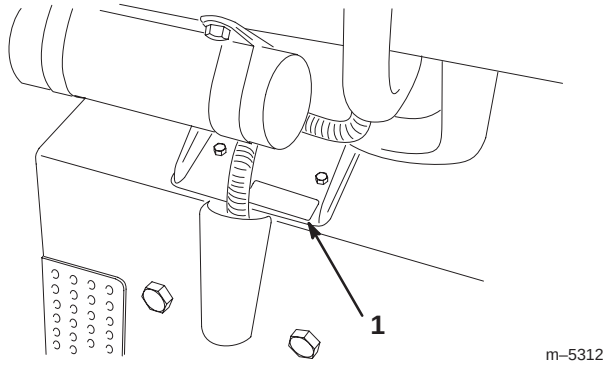

Figure 1

1. Model and serial number plate

Write the product model and serial numbers in the space below:

Model No. _____

Serial No. _____

This manual identifies potential hazards and has special safety messages that help you and others avoid personal injury and even death. ***Danger***, ***Warning***, and ***Caution*** are signal words used to identify the level of hazard. However, regardless of the hazard, be extremely careful.

Danger signals an extreme hazard that *will* cause serious injury or death if you do not follow the recommended precautions.

Warning signals a hazard that *may* cause serious injury or death if you do not follow the recommended precautions.

Caution signals a hazard that may cause minor or moderate injury if you do not follow the recommended precautions.

This manual uses two other words to highlight information. **Important** calls attention to special mechanical information and **Note:** emphasizes general information worthy of special attention.

Safety

Improper use or maintenance by the operator or owner can result in injury. To reduce the potential for injury, comply with these safety instructions and always pay attention to the safety alert ⚠ symbol, which means CAUTION, WARNING, or DANGER—"personal safety instruction." Failure to comply with the instruction may result in personal injury or death.

Supervisors, operators, and service persons should be familiar with the following standards and publications (the material may be obtained from the address shown):

- Flammable and Combustible Liquids Code: ANSI/NFPA 30
- National Fire Protection Association: ANSI/NFPA #505; Powered Industrial Trucks
  National Fire Prevention Association
  Barrymarch Park
  Quincy, Massachusetts 02269 U.S.A.
- ANSI/ASME B56.8 Personal Burden Carriers
  American National Standards Institute, Inc.
  1430 Broadway
  New York, New York 10018 U.S.A.
- ANSI/UL 558; Internal Combustion Engine Powered Industrial Trucks
  American National Standards Institute, Inc.
  1430 Broadway
  New York, New York 10018 U.S.A.
  or
  Underwriters Laboratories
  333 Pfingsten Road
  Northbrook, Illinois 60062 U.S.A.

Safe Operating Practices

⚠ Warning ⚠

The Workman is an off-highway vehicle only and is not designed, equipped, or manufactured for use on public streets, roads, or highways.

Supervisor's Responsibilities

- Make sure that operators are thoroughly trained and familiar with the Operator's Manual and all labels on the vehicle.
- Be sure to establish your own special procedures and work rules for unusual operating conditions (e.g. slopes too steep for vehicle operation).

Before Operating

- Operate the machine only after reading and understanding the contents of this manual.
- **Never** allow children to operate the vehicle. Anyone who operates the vehicle should have a motor vehicle license.

- **Never** allow other adults to operate the vehicle without first reading and understanding the Operator's Manual. Only trained and authorized persons should operate this vehicle. Make sure that all operators are physically and mentally capable of operating the vehicle.
- This vehicle is designed to carry **only you**, the operator, and **one passenger** in the seat provided by the manufacturer. **Never** carry any other passengers on the vehicle.
- **Never** operate the vehicle when under the influence of drugs or alcohol. Even prescription drugs and cold medicines can cause drowsiness.
- Do not drive the vehicle when you are tired. Be sure to take occasional breaks. It is very important that you stay alert at all times.
- Become familiar with the controls and know how to stop the engine quickly.
- Keep all shields, safety devices, and decals in place. If a shield, safety device, or decal is malfunctioning, illegible, or damaged, repair or replace it before operating the machine.
- Always wear substantial shoes. Do not operate the machine while wearing sandals, tennis shoes or sneakers. Do not wear loose fitting clothing or jewelry which could get caught in moving parts and cause personal injury.
- Wearing safety glasses, safety shoes, long pants and a helmet is advisable and required by some local safety and insurance regulations.
- Avoid driving when it is dark, especially in unfamiliar areas. If you must drive when it is dark, be sure to drive cautiously, use the headlights, and even consider adding additional lights.
- Be extremely careful when operating around people. Always be aware of where bystanders might be.
- Before operating the vehicle, always check the designated areas of the vehicle that are stated in the pre-starting section of this manual. If something is wrong, do **not** use the vehicle. Make sure that the problem is corrected before the vehicle or attachment is operated.
- Since gasoline is highly flammable, handle it carefully.
  - Use an approved gasoline container.
  - Do not remove the cap from the fuel tank when the engine is hot or running.
  - Do not smoke while handling gasoline.
  - Fill the fuel tank outdoors, and fill it to about 1 in. (25 mm) below the top of the tank (the bottom of the filler neck). Do not overfill it.
  - Wipe up any spilled gasoline.

While Operating

Warning

Engine exhaust contains carbon monoxide, which is an odorless, deadly poison that can kill you.

Do not run engine indoors or in an enclosed area.

- The operator and passenger should remain seated whenever the vehicle is in motion. The operator should keep both hands on the steering wheel whenever possible, and the passenger should use the hand holds provided. Keep your arms and legs within the vehicle body at all times.
- Drive slower and turn less sharply when you are carrying a passenger. Remember your passenger may not be expecting you to brake or turn and may not be ready.
- Always watch out for and avoid low overhangs such as tree limbs, door jambs, and over-head walkways. Make sure there is enough room over head to easily clear the vehicle and your head.
- Always shift into neutral and apply the parking brake before leaving an idling vehicle, or else the vehicle may creep.
- Failure to operate the vehicle safely may result in an accident, tip over of the vehicle, and serious injury or death. Drive carefully. To prevent tipping or loss of control:
  - Use extreme caution, reduce speed, and maintain a safe distance around sand traps, ditches, creeks, ramps, unfamiliar areas, or any areas that have abrupt changes in ground conditions or elevation.
  - Watch for holes or other hidden hazards.
  - Use extra caution when operating the vehicle on wet surfaces, in adverse weather conditions, at higher speeds, or with a full load. Stopping time and distance will increase with a full load.
  - Avoid sudden stops and starts. Do not go from reverse to forward or forward to reverse without first coming to a complete stop.
  - Slow down before turning. Do not attempt sharp turns or abrupt maneuvers or other unsafe driving actions that may cause a loss of vehicle control.
  - When dumping, do not let anyone stand behind the vehicle and do not dump the load on anyone's feet. Release the tailgate latches from the side of the box, not from behind.
  - Only operate the vehicle when the cargo box is down and latched.

– Before backing up, look to the rear and ensure that no one is behind you. Back up slowly.

– Watch out for traffic when you are near or crossing roads. Always yield the right of way to pedestrians and other vehicles. This vehicle is **not** designed for use on streets or highways. Always signal your turns or stop early enough so that other people know what you plan to do. Obey all traffic rules and regulations.

– The electrical and exhaust systems of the vehicle can produce sparks capable of igniting explosive materials. Never operate the vehicle in or near an area where there is dust or fumes in the air which are explosive.

– If you are ever unsure about safe operation, **stop work** and ask your supervisor.

- Do not touch the engine or muffler while the engine is running or soon after it has stopped. These areas may be hot enough to cause burns.
- If the machine ever vibrates abnormally, stop immediately, wait for all motion to stop, and inspect the vehicle for damage. Repair all damage before commencing operation.
- Before getting off of the seat:

  A. Stop the movement of the machine.

  B. Set the parking brake.

  C. Turn the ignition key to Off.

  D. Remove the ignition key.

Note: If the vehicle is on an incline, block the wheels after getting off of the vehicle.

Braking

- Slow down before you approach an obstacle. This gives you extra time to stop or turn away. Hitting an obstacle can damage the vehicle and its contents. More important, it can injure you and your passenger.
- Gross Vehicle Weight (GVW) has a major impact on your ability to stop and/or turn. Heavy loads and attachments make a vehicle harder to stop or turn. The heavier the load, the longer it takes to stop.
- Decrease the vehicle speed if the cargo box has been removed and there is no attachment on the vehicle. The braking characteristics change and fast stops may cause the rear wheels to lock up, which may affect the control of the vehicle.
- Turf and pavement are much slipperier when they are wet. It can take 2 to 4 times as long to stop on wet surfaces as on dry surfaces. If you drive through standing water deep enough to get the brakes wet, they will not work well until they are dry. After driving through water, you should test the brakes to make sure they work properly. If they do not, drive slowly while putting light pressure on the brake pedal. This will dry the brakes out.

Operating on Hills

Warning

Operating the vehicle on a hill may cause tipping or rolling of the vehicle, or the engine may stall and you could lose headway on the hill. This could result in personal injury.

- **Do not exceed slopes greater than 12°.**
- **Do not accelerate quickly or slam on the brakes when backing down a hill, especially with a load.**
- **If the engine stalls or you lose headway on a hill, slowly back straight down the hill. Never attempt to turn the vehicle around.**
- **Never drive across a steep hill; always drive straight up or down or go around the hill.**
- **Avoid turning on a hill.**
- **Reduce your load and the speed of the vehicle.**
- **Avoid stopping on hills, especially with a load.**

These extra cautions need to be taken when operating the vehicle on a hill:

- Slow down before starting up or down a hill.
- If the engine stalls or you begin to lose headway while climbing a hill, gradually apply the brakes and slowly back straight down the hill.
- Turning while traveling up or down hills can be dangerous. If you have to turn while on a hill, do it slowly and cautiously. Never make sharp or fast turns.
- Heavy loads affect stability. Reduce the weight of the load and your speed when operating on hills or if the load has a high center of gravity. Secure the load to prevent it from shifting.
- Avoid stopping on hills, especially with a load. Stopping while going down a hill will take longer than stopping on level ground. If the vehicle must be stopped, avoid sudden speed changes, which may initiate tipping or rolling of the vehicle. Do not slam on the brakes when rolling backward, as this may cause the vehicle to overturn.
- Travel straight up and down slopes whenever possible.
- We strongly recommend installing the optional ROPS Kit when operating on hilly terrain.

Operating on Rough Terrain

Reduce speed and load when operating on rough terrain, uneven ground, and near curbs, holes, and other sudden changes in terrain. Loads may shift, causing the vehicle to become unstable.

We strongly recommend installing the optional ROPS Kit when operating on rough terrain.

Warning

Sudden changes in terrain may cause abrupt steering wheel movement, possibly resulting in hand and arm injuries.

- **Reduce your speed when operating on rough terrain and near curbs.**
- **Grip the steering wheel loosely around the perimeter. Keep your hands clear of the steering wheel spokes.**

Loading and Dumping

The weight and position of the cargo and passenger can change the vehicle center of gravity and vehicle handling. To avoid loss of control and personal injury, follow these guidelines:

- Do **not** carry loads which **exceed** the load limits described on the vehicle weight label; refer to Specifications, page 13, for vehicle weight limits. The load rating is for **level surfaces only**.
- Reduce the weight of the load when operating on hills and rough terrain to avoid tipping or overturning of the vehicle.
- Reduce the weight of the load if the center of gravity is high. Items such as bricks, fertilizer, or landscape timbers stack higher in the box. The higher a load is stacked, the more likely the vehicle is to tip over. Distribute the load as low as possible, making sure that the load does not affect rear visibility.
- Position the weight of the load evenly from side to side. If you position the load toward one of the sides, the vehicle is more likely to tip over while turning.
- Position the weight of a load evenly from front to back. If you position the load behind the rear axle, it will reduce the weight on the front wheels. This may result in a loss of steering control or cause the vehicle to tip over on hills or bumpy terrain.
- Use extra caution if the load exceeds the dimensions of the box and when handling off-center loads that cannot be centered. Keep loads balanced and secure to prevent them from shifting.
- Always secure loads so that they do not shift. If a load is not secured, or you are transporting a liquid in a large container such as a sprayer, the load can shift. This shifting happens most often while turning, going up or down hills, suddenly changing speeds, or while driving over rough surfaces. Shifting loads can cause the vehicle to tip over.

Warning

The weight of the box may be heavy. Hands or other body parts could be crushed.

- **Keep hands and other body parts clear when lowering the box.**
- **Do not dump materials on bystanders.**

- Never dump a loaded cargo box while the vehicle is sideways on a hill. The change in weight distribution may cause the vehicle to overturn.
- When operating with a heavy load in the cargo box, reduce your speed and allow for sufficient braking distance. Do not suddenly apply the brakes. Use extra caution on slopes.
- Be aware that heavy loads increase your stopping distance and reduce your ability to turn quickly without tipping over.
- The rear cargo space is intended for load carrying purposes only, not for passengers.
- Never overload your vehicle. The name plate (located under dash on center column) shows load limits for the vehicle. Never overload the attachments or exceed the Gross Vehicle Weight (GVW).

Maintenance

- Only qualified and authorized personnel shall be permitted to maintain, repair, adjust, or inspect the vehicle.
- Before servicing or making adjustments to the machine, stop the engine, set the parking brake, and remove the key from the ignition to prevent someone from accidentally starting the engine.
- To make sure that the entire machine is in good condition, keep all nuts, bolts, and screws properly tightened.
- To reduce the potential for fire, keep the engine area free of excessive grease, grass, leaves, and accumulation of dirt.
- Never use an open flame to check the level or leakage of fuel or battery electrolyte.

- If the engine must be running to perform a maintenance adjustment, keep your hands, feet, clothing, and any parts of your body away from the engine and any moving parts. Keep everyone away.
- Do not use open pans of fuel or flammable cleaning fluids for cleaning parts.
- **Do not adjust** the ground speed governor. To ensure safety and accuracy, have an Authorized Toro Distributor check the ground speed.
- If major repairs are ever needed or assistance is required, contact an Authorized Toro Distributor.
- To be sure of optimum performance and safety, always purchase genuine Toro replacement parts and accessories. Replacement parts and accessories made by other manufacturers could be dangerous. Altering this vehicle in any manner that may affect vehicle operation, performance, durability, or its use, may result in injury or death. Such use could void the product warranty.

Sound Pressure Level

This unit has an equivalent continuous A-weighted sound pressure at the operator ear of 78 dB(A) based on measurements of identical machines per SAE J1174-MAR 85 procedures.

Vibration Level

This unit does not exceed a vibration level of 2.5 m/s^2 at the hands based on measurements of identical machines per ISO 5349 procedures.

This unit does not exceed a vibration level of 0.5 m/s^2 at the posterior based on measurements of identical machines per ISO 2631 procedures.

Slope Chart

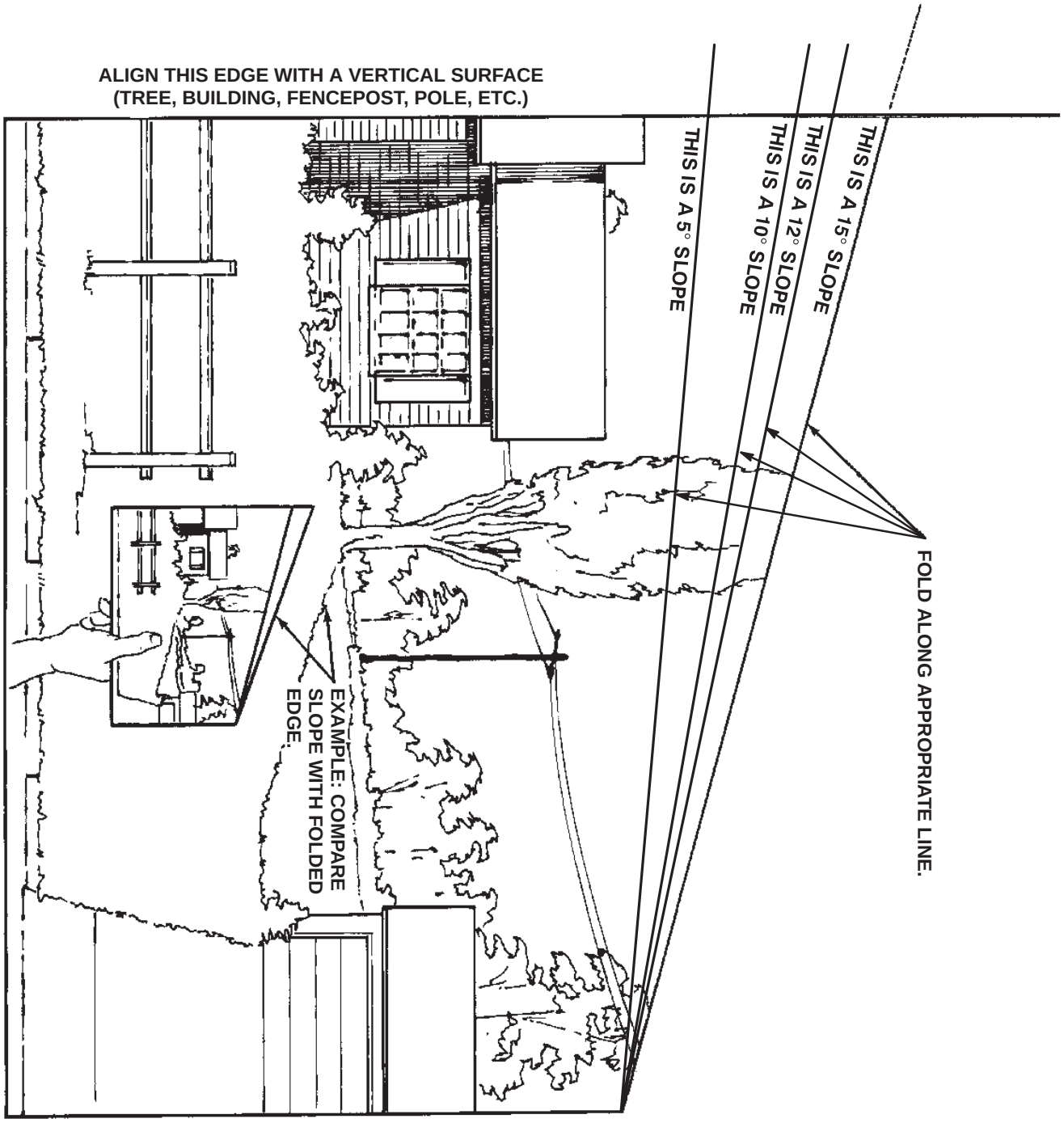
ALIGN THIS EDGE WITH A VERTICAL SURFACE
(TREE, BUILDING, FENCEPOST, POLE, ETC.)
THIS IS A 5° SLOPE
THIS IS A 10° SLOPE
THIS IS A 12° SLOPE
THIS IS A 15° SLOPE
FOLD ALONG APPROPRIATE LINE.
EXAMPLE: COMPARE SLOPE WITH FOLDED EDGE.

Safety and Instruction Decals

Safety decals and instructions are easily visible to the operator and are located near any area of potential danger. Replace any decal that is damaged or lost.

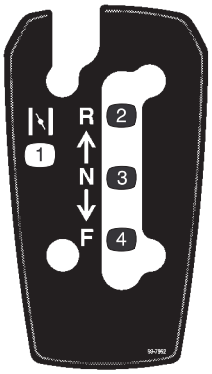

99-7952

1. Choke
2. Reverse
3. Neutral
4. Forward

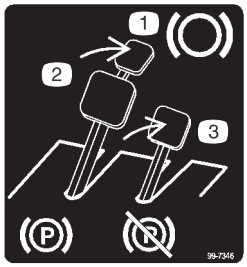

99-7346

1. Parking brake
2. Parking brake on
3. Parking brake off

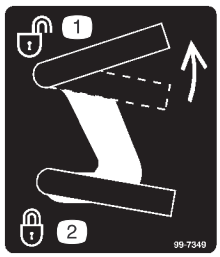

99-7349

1. Unlock cargo bed
2. Lock cargo bed

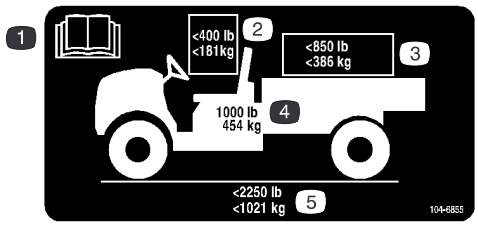

104-6855

1. Read the operator's manual for further instructions.
2. The maximum combined operator and passenger weight should not exceed 400 lb. (181 kg).
3. The maximum cargo weight should not exceed 850 lb. (386 kg).
4. The base weight of the vehicle is 1000 lb. (454 kg).
5. The maximum gross vehicle weight should not exceed 2250 lb. (1021 kg).

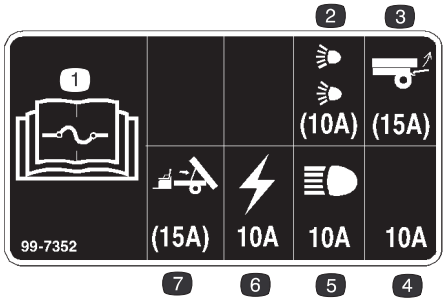

99-7352

1. Read the operator's manual for information on fuses.
2. 10 amp. fuse for optional Road Light Kit
3. 15 amp. fuse for optional Rear Lift Kit
4. 10 amp. fuse—open
5. 10 amp. fuse for headlights
6. 10 amp. fuse for ignition system
7. 15 amp. fuse for optional Electric Bed Lift Kit

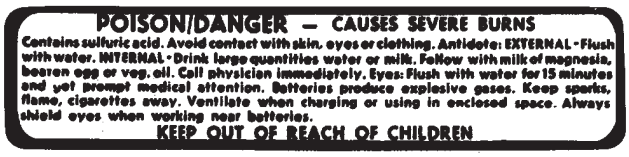

26-7390

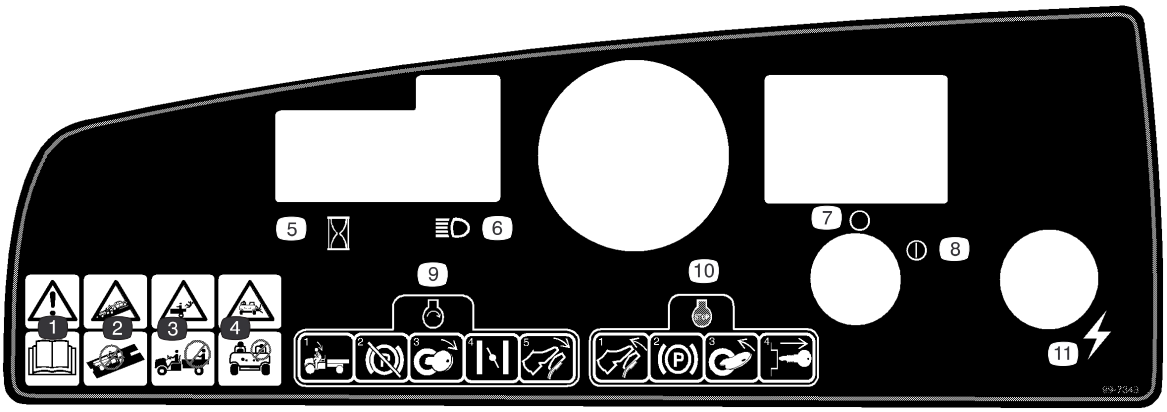

99-7343

1. Warning—read the operator's manual.
2. Only drive this vehicle off-highway. This vehicle is not made for use on public streets, roads, or highways.
3. Do not carry passengers in the cargo bed. They may fall out of the vehicle.
4. Do not allow children to operate this vehicle.
5. Hour meter
6. Headlights
7. Ignition off
8. Ignition on
9. To start the vehicle, sit in the operator's seat. Release the parking brake. Turn the ignition on. Pull the choke lever out (if needed). Depress the accelerator.
10. To stop the vehicle, disengage the accelerator and engage the parking brake. Turn the ignition off and remove the key.
11. Power point

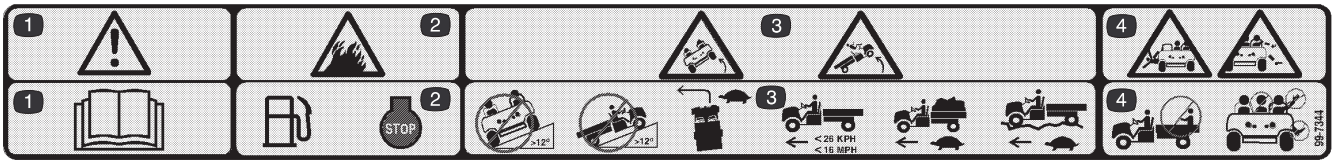

99-7344

1. Danger—read the operator's manual.
2. Fuel is flammable. Stop the engine before adding fuel.
3. Tipping hazard—do not drive across slopes that are greater than 15 degrees or up slopes greater than 12 degrees. Reduce speed when turning, carrying heavy loads, or driving on rough terrain. Keep the engine speed under 16 MPH (26 km/h).
4. Passengers are at risk of falling from the vehicle. Do not carry passengers in the cargo bed. Keep arms and legs inside of the vehicle at all times.

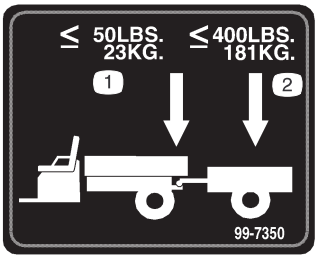

99-7350

1. Maximum tongue weight is 50 lb. (23 kg)
2. Maximum trailer weight is 400 lb. (181 kg)



99-7345

1. Danger—read the operator's manual.
2. Hot surface hazard—keep hands away.
3. Entanglement hazard—stay away from moving parts.
4. Crushing hazard—use the prop rod to support the cargo bed.



99-7954

1. Danger—read the operator's manual.
2. Do not carry passengers in the cargo bed. They may fall out.
3. Explosive hazard—remove fuel containers from the cargo bed before filling.

Specifications

Note: Specifications and design are subject to change without notice.

Base weight	Dry 1000 lbs. (454 kg)
Rated capacity (on level ground)	1250 lb. (567 kg) total, including 200 lb. (90.7 kg) operator and 200 lb. (90.7 kg) passenger, load, trailer tongue weight, gross trailer weight, accessories, and attachments
Maximum gross vehicle weight (GVW) (on level ground)	2250 lb. (1021 kg) total, including all of the weights listed above
Maximum cargo capacity (on level ground)	850 lb. (386 kg) total, including trailer tongue weight and gross trailer weight
Tow capacity: Standard Hitch Heavy Duty Hitch	 Tongue weight 50 lb. (23 kg) Maximum trailer weight 400 lb. (182 kg) Tongue weight 100 lbs. (45 kg) Maximum trailer weight 800 lb. (363 kg)
Overall width	60 in. (152.4 cm)
Overall length	117 in. (297.2 cm)
Ground clearance	9-1/4 in. (23.5 cm) at the front with no load or operator 6-1/2 in. (19.7 cm) at the rear with no load or operator
Wheel base	79 in. (200.7 cm)
Wheel tread (center line to center line)	49 in. (124.5 cm) in the front 48-1/4 in. (122.6 cm) in the rear
Cargo box length	46 in. (116.8 cm) inside 51 in. (129.5 cm) outside
Cargo box width	49 in. (124.5 cm) inside 54 in. (137.2 cm) outside
Cargo box height	10 in. (25.4 cm) inside

Setup

Note: Determine the left and right sides of the machine from the normal operating position.

Loose Parts

Note: Use the chart below to verify that all parts have been shipped.

Description	Qty.	Use
Wheel assembly	2	Installing the rear wheels (Model No. 07252TC)
Wheel assembly Washer Dust cap	2 2 2	Installing the front wheels (Model No. 07252TC)
Steering wheel	1	Installing the steering wheel (Model No. 07252TC)
Bumper	1	Installing the bumper (Model No. 07252TC)
Hitch	1	Installing the hitch (Model No. 07252TC)
Seat	2	Installing the seats (Model No. 07252TC)
Cargo box Right-hand pivot bracket Left-hand pivot bracket Prop rod clip Flange head screw, 3/8 x 1 in. Screw, 5/16 x 3/4 in.	1 1 1 1 4 2	Installing the cargo box (Model No. 07252TC)
Key	2	Use in the ignition switch.
Operator's Manual Engine Operator's Manual	1 1	Read before operating the machine.
Operator Video	1	Watch before operating the machine.
Parts Catalog	1	Use for ordering replacement parts.
Registration Card	1	Complete and return to Toro.
Predelivery Inspection Form	1	Complete and file in your customer history portfolio.

Installing the Rear Wheels

Note: This procedure is only needed for Model No. 07252TC.

1. Remove the fasteners securing the wheels.
2. Remove the shipping bracket secured to the wheel studs.
3. Mount the wheels with the previously removed fasteners (Fig. 2) and torque to 45–65 ft.-lb. (61–88 N·m).

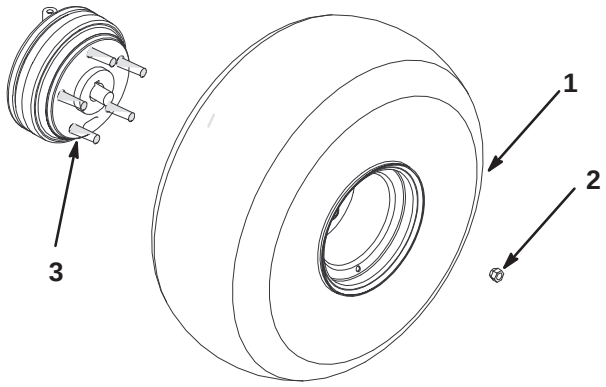

Figure 2

1. Wheel assembly
2. Wheel nut
3. Wheel stud

Installing the Front Wheels

Note: This procedure is only needed for Model No. 07252TC.

1. Remove the fasteners securing the wheels.
2. Remove the shipping bracket from the spindles.
3. Apply Loctite (blue) to the screw threads.
4. Mount the wheels with the previously removed fasteners (Fig. 3) and torque the bolts to 135–165 ft.-lb. (183–224 N·m)

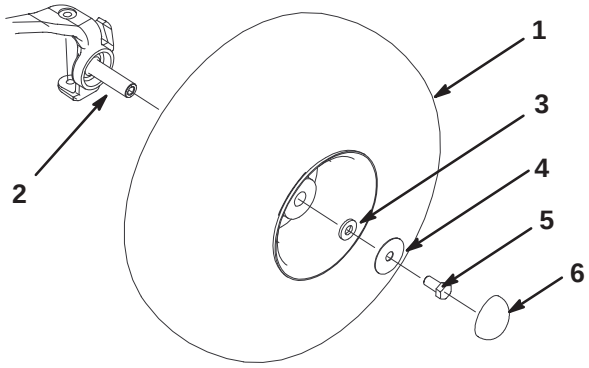

Figure 3

1. Tire and wheel assembly
2. Spindle
3. Small washer
4. Large washer
5. Screw
6. Dust cap

Installing the Steering Wheel

Note: This procedure is only needed for Model No. 07252TC.

1. Remove the nut and lock washer from the steering shaft.
2. Slide the steering wheel and washer onto the shaft. Position the steering wheel on the shaft so that the cross beam is horizontal when the tires are pointed straight ahead and the thicker spoke of the steering wheel is downward.
3. Secure the steering wheel to the shaft with the nut (Fig. 4).

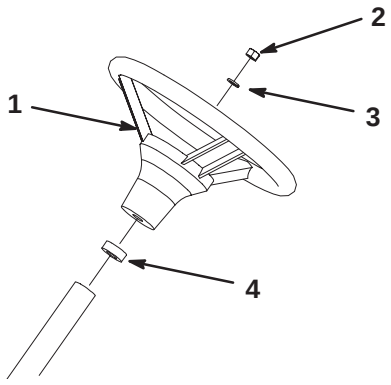

Figure 4

1. Steering wheel
2. Nut
3. Washer
4. Foam seal

Installing the Bumper

Note: This procedure is only needed for Model No. 07252TC.

1. Remove the 2 bolts, washers, and nuts secured to the front of the frame.
2. Align the mounting holes and secure the bumper to the frame with the fasteners previously removed (Fig. 5).

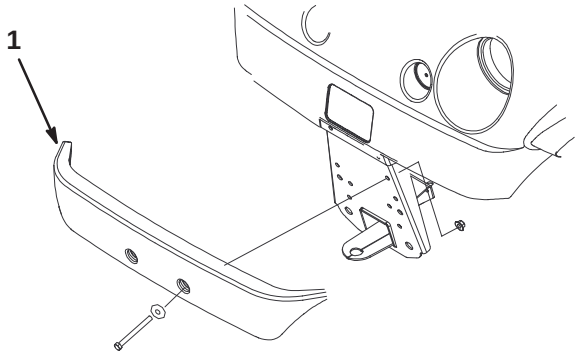

Figure 5

1. Bumper

Installing the Seats

Note: This procedure is only needed for Model No. 07252TC.

Insert the seat bracket into the seat base opening and pivot the seat downward (Fig. 6).

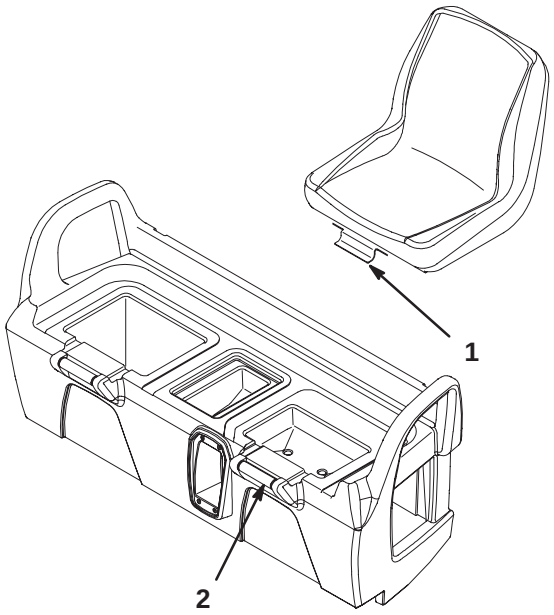

Figure 6

1. Seat bracket
2. Seat base

Installing the Hitch

Note: This procedure is only needed for Model No. 07252TC.

1. Remove the 4 bolts and nuts from the inside rear of the frame.
2. Align the hitch with the mounting holes on the frame. Secure the hitch with the screws and nuts (Fig. 7).

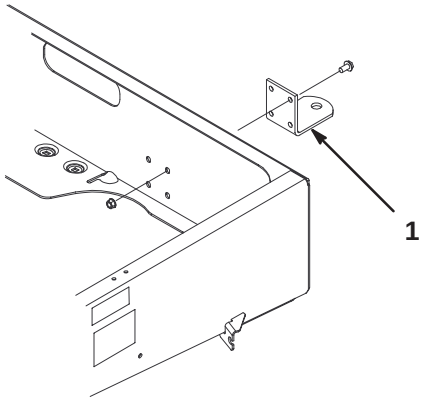

Figure 7

1. Hitch

Installing the Cargo Box

Note: This procedure is only needed for Model No. 07252TC.

1. Position the cargo box onto the frame. The cargo box must lay flat and be centered.
2. Mount the left hand pivot bracket to the left rear corner of the frame with 2 flange head screws (3/8 x 1 in.). Position the bracket as shown in Figure 8.

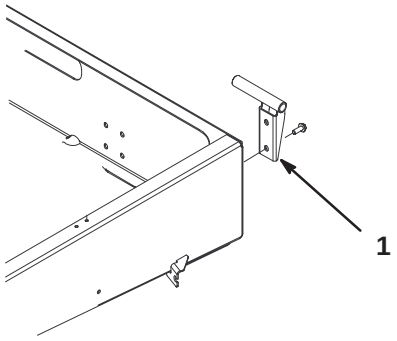

Figure 8

1. Pivot bracket

3. Slide the cargo box mounting hole onto the pivot bracket (Fig. 9).

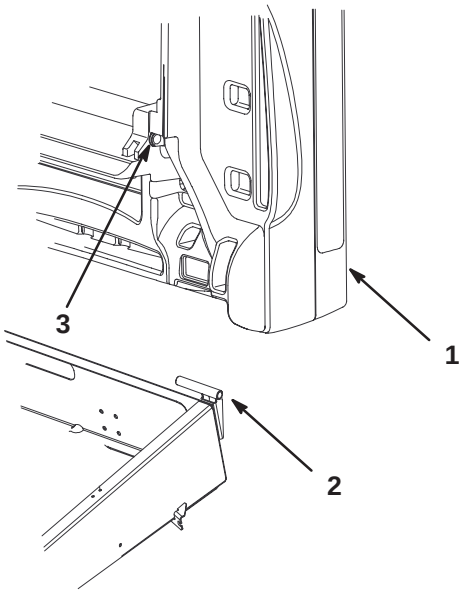

Figure 9

1. Cargo box
2. Pivot bracket
3. Cargo box mounting hole

4. Insert the right hand pivot bracket into the mounting hole in the cargo box and then mount it to the frame.

5. Have another person help to raise the cargo box until the “J” hook end of the prop rod is positioned between the 2 holes on the left frame rail (Fig. 10).

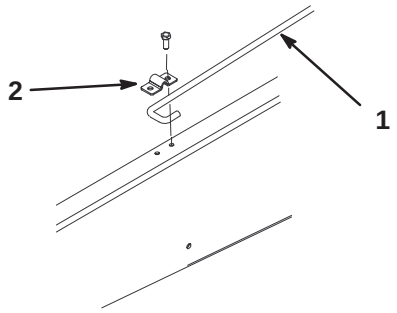

Figure 10

1. Prop rod
2. Prop rod clip

6. Secure the prop rod to the frame rail with the prop rod clip and 2 screws (5/16 x 3/4 in.) (Fig. 10).

7. Lower the cargo box.

Activating the Battery

Note: This procedure is only needed for Model No. 07252TC.

If the battery is not filled with electrolyte or activated, it must be removed from the vehicle, filled with electrolyte, and charged. Bulk electrolyte with 1.260 specific gravity must be purchased from a local battery supply outlet.

1. Remove the rubber strap securing the battery to the battery base. Lift the battery out of the battery base.

Danger

Battery electrolyte contains sulfuric acid which is a deadly poison and causes severe burns.

- **Do not drink electrolyte and avoid contact with skin, eyes or clothing. Wear safety glasses to shield your eyes and rubber gloves to protect your hands.**
- **Fill the battery where clean water is always available for flushing the skin.**

2. Remove the filler caps from the battery and slowly fill each cell until electrolyte is just above the plates.

3. Replace the filler caps and connect a 3 to 4 amp. battery charger to the battery posts. Charge the battery at a rate of 3 to 4 amperes for 4 to 8 hours (12 volts). Do not overcharge the battery.

Warning

Charging the battery produces gasses that can explode.

Never smoke near the battery and keep sparks and flames away from battery.

4. When the battery is charged, disconnect the charger from the electrical outlet and battery posts.

5. Remove the filler caps. Slowly add electrolyte to each cell until electrolyte is up to the fill line. Install the filler caps.

Important Do not overfill the battery. Electrolyte will overflow onto other parts of the vehicle and severe corrosion and deterioration will result.

6. Install the battery; refer to Installing the Battery, page 36.

Checking the Crankcase Oil

The engine is shipped with oil in the crankcase; however, the level of the oil must be checked before and after the engine is first started.

1. Position the machine on a level surface.
2. Clean around the oil dipstick (Fig. 11) so dirt cannot fall into the hole and damage the engine.



Figure 11

1. Oil dipstick

3. Remove the oil dipstick and wipe the metal end clean.
4. Slide the oil dipstick fully into the filler tube. Pull the dipstick out and look at the metal end. If the oil level is low, add oil of the proper type to raise the level to, but not over, the "F" mark on the dipstick. Refer to Engine Oil, page 28, for the proper oil type and viscosity. Add the oil slowly and check the level often during this process. **Do not overfill.**
5. Install the oil dipstick.

Checking the Tire Pressure

Check the tire pressure every 8 hours or daily to ensure proper levels.

The air pressure range in the front tires is 6–12 psi (41–83 kPa).

The air pressure range in the rear tires is 8–15 psi (55–103 kPa).

The air pressure needed is determined by the payload carried. The **lower** the air pressure, the less the compaction and tire marks are minimized. Lower pressure should not be used for heavy payloads at high speeds.

Higher pressures should be used for heavier payloads at higher speeds. Do not exceed the maximum pressure.

Fuel Tank

Recommended Gasoline

Use fresh, clean, **unleaded** regular gasoline suitable for automotive use (87 pump octane minimum). Leaded gasoline may be used if unleaded regular is not available.

Important Never use gasoline containing **methanol**, gasoline containing more than 10% ethanol, gasoline additives, or white gas because engine fuel system damage could result.

Danger

In certain conditions, gasoline is extremely flammable and highly explosive. A fire or explosion from gasoline can burn you and others and can damage property.

- **Fill the fuel tank outdoors, in an open area, when the engine is cold. Wipe up any gasoline that spills.**
- **Do not fill the fuel tank completely full. Add gasoline to the fuel tank until the level is 1 in. (25 mm) below the bottom of the filler neck. This empty space in the tank allows gasoline to expand.**
- **Never smoke when handling gasoline, and stay away from an open flame or where gasoline fumes may be ignited by a spark.**
- **Store gasoline in an approved container and keep it out of the reach of children. Never buy more than a 30-day supply of gasoline.**
- **Always place gasoline containers on the ground away from your vehicle before filling.**
- **Do not fill gasoline containers inside a vehicle or on a truck or trailer bed because interior carpets or plastic truck bed liners may insulate the container and slow the loss of any static charge.**
- **When practical, remove gas-powered equipment from the truck or trailer and refuel the equipment with its wheels on the ground.**
- **If this is not possible, then refuel such equipment on a truck or trailer from a portable container, rather than from a gasoline dispenser nozzle.**
- **If a gasoline dispenser nozzle must be used, keep the nozzle in contact with the rim of the fuel tank or container opening at all times until fueling is complete.**

Filling the Fuel Tank

The fuel tank capacity is approximately 7 gallons.

1. Shut the engine off and set the parking brake.
2. Clean the area around the fuel tank cap (Fig. 12).

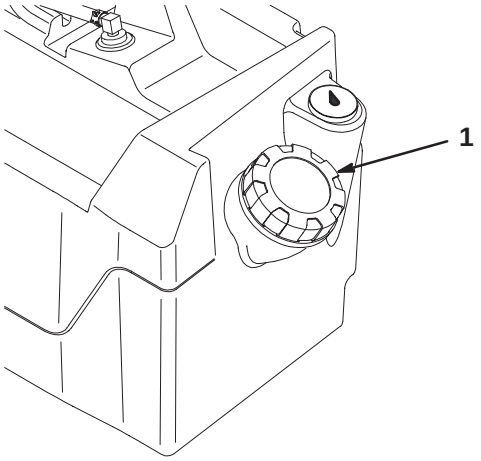

Figure 12

1. Fuel tank cap

3. Remove the fuel tank cap.
4. Fill the tank to about one inch below the top of tank, (bottom of the filler neck). This space in the tank allows gasoline to expand. **Do not overfill.**
5. Install the fuel tank cap securely. Wipe up any fuel that may have spilled.

Operation

Note: Determine the left and right sides of the machine from the normal operating position.

Think Safety First

Please carefully read all of the safety instructions and decals in the safety section. Knowing this information could help you or bystanders avoid injury.

Controls

Accelerator Pedal

The accelerator pedal (Fig. 13) gives the operator the ability to vary ground speed of the vehicle. Depressing the pedal starts the engine. Depressing the pedal farther increases ground speed. Releasing the pedal will slow the vehicle and the engine will stop running. Maximum forward speed is 16 MPH (26 km/h).

Brake Pedal

The brake pedal is used to stop or slow the vehicle (Fig. 13).

Caution

Brakes can become worn or can be misadjusted resulting in personal injury.

If brake pedal travels to within 1 in. of the vehicle floor board, the brakes must be adjusted or repaired.

Parking Brake

The parking brake is a small plate at the top of the brake pedal (Fig. 13). Whenever the engine is shut off, the parking brake must be engaged to prevent accidental movement of the vehicle. To engage the parking brake, step on the brake pedal firmly and roll forward with the top of your foot. To disengage, depress the accelerator pedal. If the vehicle is parked on a steep grade, make sure the parking brake is applied. Place blocks at the downhill side of wheels.

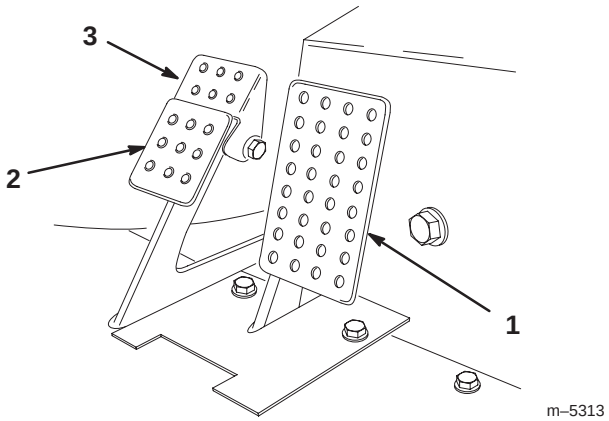

Figure 13

1. Accelerator pedal
2. Brake pedal
3. Parking brake

Choke Control

The choke control is located below and to the right of the operator's seat. To start a cold engine, close the carburetor choke (Fig. 14) by pulling the choke control outward to the ON position. After the engine starts, regulate the choke to keep the engine running smoothly. As soon as possible, open the choke by pushing the control in to the OFF position. A warm engine requires little or no choking.

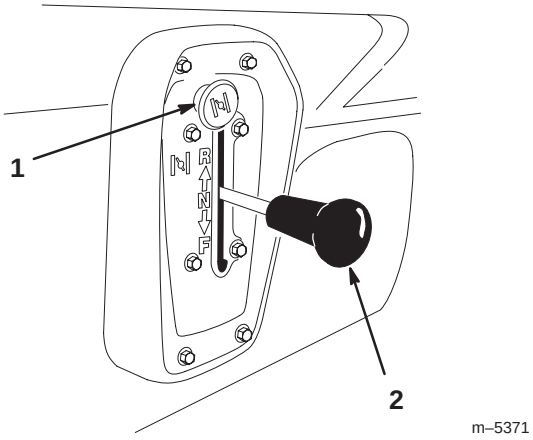

Figure 14

1. Choke
2. Gear shift selector

Gear Shift Selector

The gear shift selector has three positions: forward, reverse, and neutral (Fig. 14). The gear shift selector will start and run in any of the three positions.

Important The vehicle should always be stopped before changing the gear selection and direction.

Ignition Switch

The ignition switch (Fig. 15), used to start and stop the engine, has two positions: Off and On. Rotate the key clockwise to the On position to allow operation. When the vehicle is stopped, rotate the key counterclockwise to the Off position. Remove the key from the ignition.

Hour Meter

The hour meter (Fig. 15) indicates the total number of hours the engine is running. The hour meter starts to function whenever the accelerator is depressed.

Oil Light

The oil light warns the operator if the engine oil level drops below a safe level (Fig. 15). If the light comes on and remains lit, the oil level should be checked and oil added if necessary; see Engine Oil, page 28.

Note: The oil light may flicker. This is normal and no action needs to be taken.

Light Switch

Toggle the switch to activate the headlights. Push to turn the lights on (Fig. 15).

Power Point

The power point is used to power optional electrical accessories (Fig. 15).

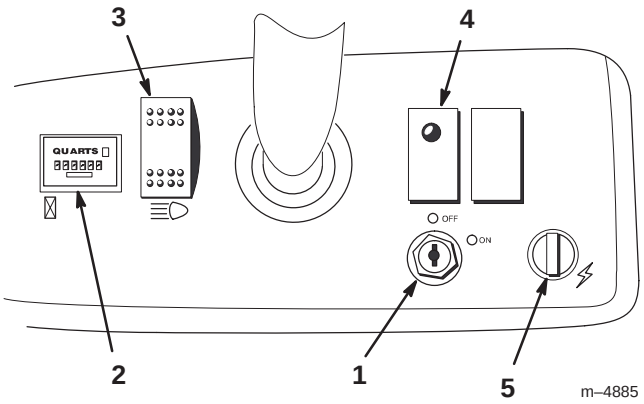

Figure 15

1. Ignition switch
2. Hour meter
3. Light switch
4. Oil light
5. Power Point

Fuel Gauge

The fuel gauge (Fig. 16) shows the amount of fuel in the tank.

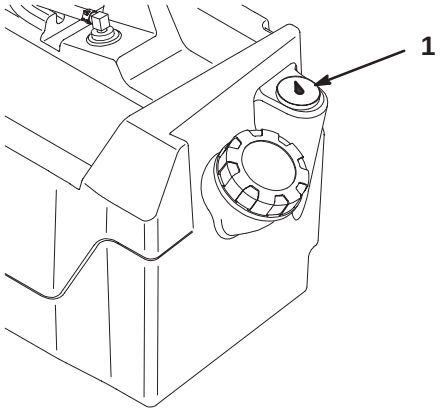

Figure 16

1. Fuel gauge

Passenger Hand Holds

The passenger hand holds are located on the right side of the dash panel and at the outside of each seat (Fig. 17).

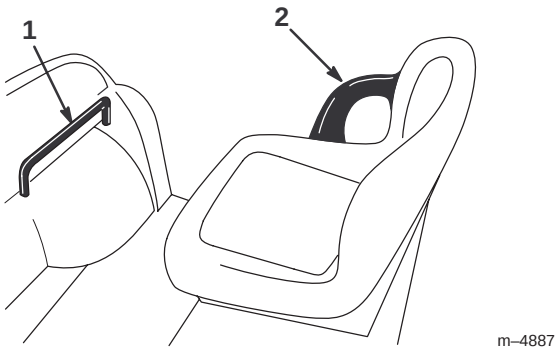

Figure 17

1. Passenger hand hold
2. Hip restraint

Pre-Starting Checks

Check the following items each time you begin using the vehicle for the day:

- Check the tire pressure.

  Note: These tires are different than car tires; they require less pressure to minimize turf compaction and damage.

- Check all fluid levels and add the appropriate amount of specified fluids, if any are found to be low.
- Check the brake pedal operation.
- Ensure that the lights are working.
- Turn the steering wheel to the left and right to check steering response.
- Check for oil leaks, loose parts, and any other noticeable malfunctions. Make sure the engine is off and all moving parts have stopped before checking for oil leaks, loose parts, and other malfunctions.

If any of the above items are not correct, notify your mechanic or check with your supervisor before taking the vehicle out for the day. Your supervisor may want you to check other items on a daily basis, so ask what your responsibilities are.

Starting the Engine

1. Sit in the operator's seat, insert the key into the ignition switch, and rotate the key clockwise to the On position.

Note: If the gear shift selector is in Reverse, the buzzer will sound to warn the operator.

2. Move the gear shift selector to the desired position.
3. Slowly step on the accelerator pedal.

Note: The parking brake will automatically disengage when the accelerator pedal is depressed.

Note: If the engine is cold, depress and hold the accelerator pedal about half-way down, and pull the choke knob out to the On position. Return the choke knob to Off after the engine warms up.

Important Do not attempt to push or tow the vehicle to get it started.

Stopping the Vehicle

To stop the vehicle, remove your foot from the accelerator pedal and slowly depress the brake pedal.

Note: Stopping distance may vary depending on the vehicle load and speed.

Parking the Vehicle

1. Engage the parking brake and rotate the ignition key to Off.
2. Remove the key from the ignition switch to prevent accidental starting.

Cargo Bed

Raising the Bed

1. Slide the latch upward toward the top of the cutout in the bed frame (Fig. 18).

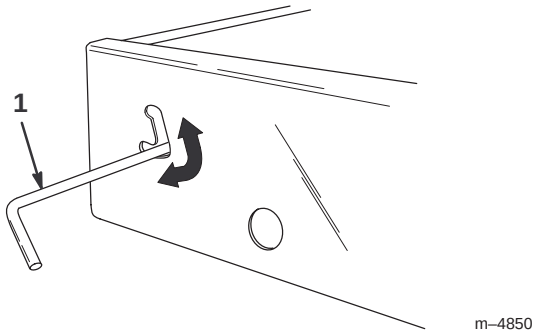

Figure 18

1. Latch

2. Lift up on the latch with one hand while raising the bed with the other hand.

3. Raise the bed to its full height; then lower it slightly to engage the prop rod (Fig. 19).

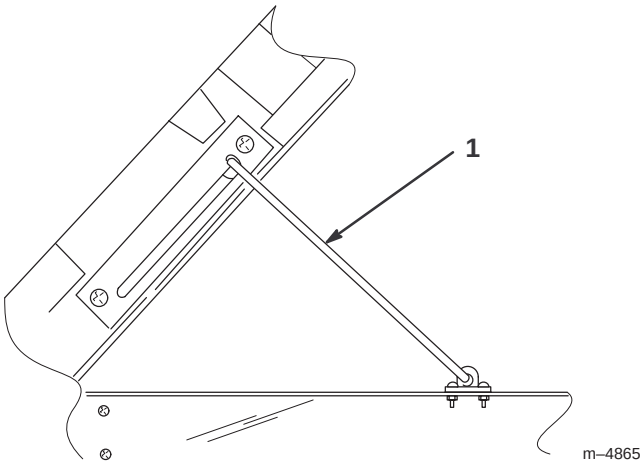

Figure 19

1. Prop rod

Lowering the Bed

1. Lift up the bed slightly with one hand while pressing down on the prop rod.
2. Lower the bed until the latch engages.
3. To secure the bed tightly to the bed frame, move the latch to the lower section of the cutout (Fig. 18).

Tailgate Latches

1. To open the tailgate latches, lift the latch handles up (Fig. 20). The latches will spring out toward the center of the tailgate. Slowly lower the tailgate.

Note: You may need to push the end of the tailgate in (especially if there is a load against the tailgate) before the latches will spring toward the center of the tailgate and release.

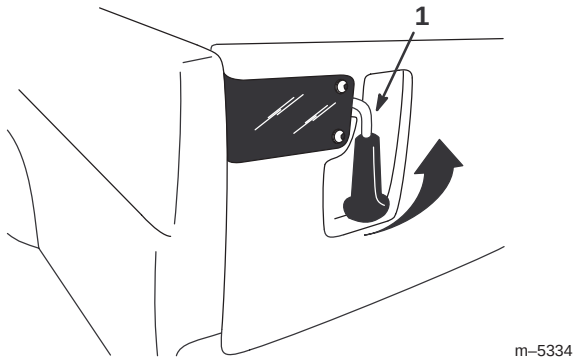

Figure 20

1. Tailgate latch

2. To close the tailgate latches, lift the handles upward and slide them toward the outside of the vehicle.
3. Push the latch handles downward to secure the latch and tailgate.

New Vehicle Break-In

To provide proper performance and long vehicle life, follow these guidelines for the first 100 operating hours:

- Check the fluid and engine oil levels regularly and be alert for indications of overheating in any component of the vehicle.
- After starting a cold engine, let it warm up for about 15 seconds before accelerating.
- Avoid hard braking situations for the first several hours of new vehicle break-in operation. New brake linings may not be at optimum performance until several hours of use has caused the brakes to become burnished (broken-in).
- Vary the vehicle speed during operation. Avoid fast starts and quick stops.
- A break-in oil for engine is not required. Original engine oil is the same type specified for regular oil changes.
- Refer to the Maintenance section for any special low hour checks.
- Check the front suspension positioning and adjust it if necessary; refer to Adjusting the Front Suspension, page 31.

Loading the Cargo Box

The capacity of the cargo box is 13 ft.^{3} (.37 m^3). The amount (volume) of material that can be placed in the box without exceeding the vehicle load ratings can vary greatly depending on the density of the material. For example, a level box of wet sand weighs 1500 lb. (680 kg), which exceeds the load rating by 650 lb. (295 kg). But a level box of wood weighs 650 lb. (295 kg), which is under the load rating.

See the table below for load volume limits with various materials:

Material	Density (lb./ft.^{3})	Max. cargo box capacity (on level ground)
Gravel		
Dry	95	3/4 full (approx.)
Wet	120	1/2 full (approx.)
Sand		
Dry	90	3/4 full
Wet	120	1/2 full
Wood	45	Full
Bark	<45	Full
Earth, packed	100	3/4 full (approx.)

Transporting the Vehicle

For moving the vehicle long distances, a trailer should be used. Make sure that the vehicle is secured to the trailer. Refer to Figures 21 and 22 for the location of the tie-down points.

Caution

Loose seats may fall off of the vehicle and trailer when transporting and land on another vehicle or become an obstruction on the road.

Remove the seats or make sure that the seats are securely fastened in the detents.



Figure 21

1. Tie down points

Towing the Vehicle

In case of an emergency, the vehicle can be towed for a short distance. However, we do not recommend this as a standard procedure.

Warning

Towing at excessive speeds could cause a loss of steering control, resulting in personal injury.

Never tow the vehicle faster than 5 MPH.

Towing the vehicle is a two person job. If the machine must be moved a considerable distance, transport it on a truck or trailer; refer to Transporting the Vehicle, page 23.

1. Remove the drive belt; refer to Replacing the Drive Belt, page 32, steps 1 and 2.
2. Affix a tow line to the tongue on the front of the frame (Fig. 22).
3. Put the vehicle in neutral and release the parking brake.

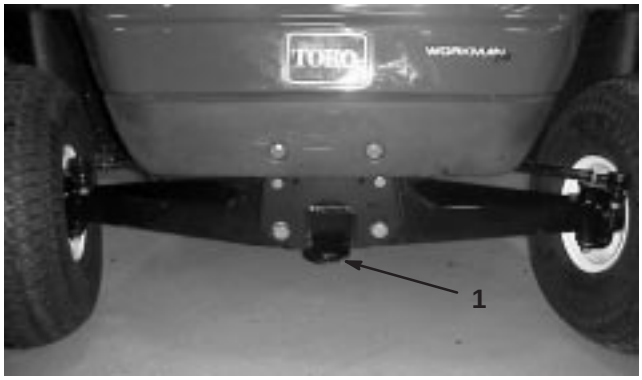

Figure 22

1. Towing tongue and tie down point

Trailer Towing

The vehicle is capable of pulling trailers. Two types of tow hitches are available for the vehicle, depending on your application. Contact your Authorized Toro Distributor for details.

When hauling cargo or towing a trailer, do not overload your vehicle or trailer. Overloading can cause poor performance or damage to the brakes, axle, engine, transaxle, steering, suspension, body structure, or tires. Always load a trailer with 60% of the cargo weight in the front of the trailer. This places approximately 10% of the Gross Trailer Weight (GTW) on the tow hitch of the vehicle.

The maximum cargo load shall not exceed 850 lb. (567 kg), including the GTW and tongue weight. For example, if the GTW = 400 lb. and tongue weight = 50 lb., then the maximum cargo load = 400 lb.)

To provide adequate braking and traction, always load the cargo box when trailering. Do not exceed the GTW limits.

Avoid parking a vehicle with a trailer on a hill. If you must park on a hill, engage the parking brake and block the trailer tires.

Maintenance

Note: Determine the left and right sides of the machine from the normal operating position.

Recommended Maintenance Schedule

Maintenance Service Interval	Maintenance Procedure
After First Use	• Check the drive belt tension. • Check the starter belt tension. • Check the engine oil.
Every 8 Hours	• Check the engine oil. • Check the tire pressure.
After First 20 Hours	• Change the engine oil. • Check the front wheel toe-in at the proper ride height.
Every 50 Hours	• Check the battery fluid level. • Check the battery cable connections.
Every 100 Hours	• Change the engine oil.[1] • Lubricate all grease fittings. • Clean the engine cooling areas.[1] • Inspect the air cleaner filter.[2] • Inspect the brake and parking brake. • Inspect the condition and wear of the tires. • Torque the wheel lug nuts. • Check the front suspension adjustment toe-in and ride height. • Check the spark plug and replace it, if necessary.
Every 200 Hours	• Replace the air cleaner filter. • Check the brake cable adjustments. • Inspect the drive belt. • Inspect and adjust the starter belt.
Every 400 Hours or Yearly	• Inspect the fuel lines.
Every 800 Hours or Yearly	• Replace the fuel filter. • Change the transaxle oil.

[1]More often in dusty, dirty conditions

Important Refer to your engine operator's manual for additional maintenance procedures.

Daily Maintenance Checklist

Duplicate this page for routine use.

Maintenance Check Item	For the week of: Mon.	Tues.	Wed.	Thurs.	Fri.	Sat.	Sun.
Check brake and parking brake operation.							
Check gear shift operation.							
Check fuel level.							
Check engine oil level.							
Check transaxle oil level.							
Inspect air filter.							
Inspect engine cooling fins.							
Check unusual engine noises.							
Check unusual operating noises.							
Check tire pressure.							
Check fluid leaks.							
Check instrument operation.							
Check accelerator operation.							
Check ride height and toe-in.							
Lubricate all grease fittings.[1]							
Touch up damaged paint.							

[1]Lubricate the fittings immediately after **every** washing, regardless of the interval listed.

Notation for Areas of Concern

Inspection performed by:		
Item	**Date**	**Information**
1		
2		
3		
4		
5		
6		
7		
8		
9		
10		
11		
12		
13		

Caution

If you leave the key in the ignition switch, someone could accidently start the engine and seriously injure you or other bystanders.

Remove the key from the ignition and disconnect the wire from the spark plug before you do any maintenance. Set the wire aside so that it does not accidentally contact the spark plug.

Warning

The bed must be raised to perform some routine maintenance.

A raised bed can fall and injure persons that are underneath it.

- **Always use the prop rod to hold the bed up before working under it.**
- **Remove any load material from the bed before working under it.**

Heavy Duty Operation

Important If the vehicle is subjected to any of the conditions listed below, maintenance should be performed twice as frequently.

- Desert operation
- Cold climate operation (below 32° F [0° C])
- Trailer towing
- Frequent operation on dusty roads
- Construction work
- After extended operation in mud, sand, water, or similar dirty conditions, have your brakes inspected and cleaned as soon as possible. This will prevent any abrasive material from causing excessive wear.
- Under frequent heavy duty operating conditions, lubricate all grease fittings and inspect air cleaner daily to prevent excessive wear.

Jacking the Vehicle

Whenever the engine is run for routine maintenance and/or engine diagnostics, the rear wheels of the vehicle should be 1 in. (25 mm) off the ground with the rear axle supported on jack stands.

Danger

The vehicle may be unstable when using a jack. It could slip off the jack, injuring anyone beneath it.

- **Do not start the engine while the vehicle is on a jack.**
- **Always remove the key from the ignition before getting off of the vehicle.**
- **Block the tires when the vehicle is on a jack.**

The jacking point at the front of the vehicle is on the front of the frame behind the towing tongue (Fig. 23) The jacking point at the rear of the vehicle is under the axle tubes (Fig. 24).

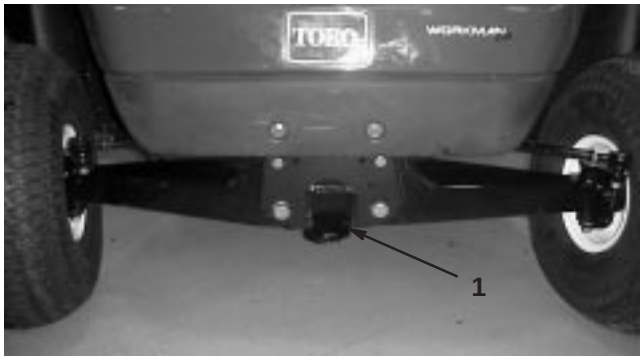

Figure 23

1. Front jacking point



Figure 24

1. Rear jacking points

Checking and Adjusting Neutral

When performing routine maintenance and/or engine diagnostics, the transaxle must be shifted into neutral (Fig. 25). The vehicle has a neutral position on the shift lever, which controls the neutral in the transaxle. The following steps should be taken to make sure that the neutral shift lever operates the transaxle neutral correctly:

1. Set the shift lever into the Neutral position.
2. Set the neutral bracket on the transaxle to the neutral position (level) (Fig. 25).
3. Tighten one of the locknuts (Fig. 25) just enough to take the slack out of the shift cable.

Note: You must hold the locknut below the bracket to tighten the locknut on top.

4. Tighten the other locknut just enough to take the slack out of the other shift cable.
5. Check the first locknut to make sure that all of the slack is taken out.
6. Start the engine and shift into Forward, Reverse, and Neutral to ensure that the neutral bracket is operating properly.

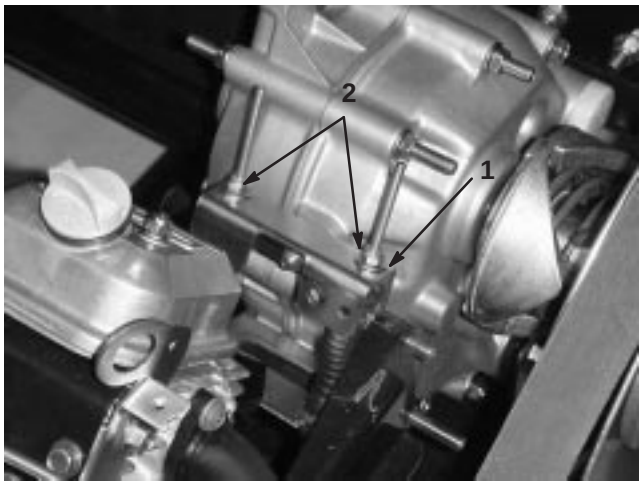

Figure 25

1. Neutral bracket
2. Locknuts

Servicing the Engine Oil

Service Interval/Specification

Check the oil level before each use.

Change the oil after the first 20 operating hours and every 100 operating hours thereafter.

Note: Change the oil more frequently when operating conditions are extremely dusty or sandy.

Oil Type: Detergent oil (API service SG, SH, SJ, or higher)

Viscosity: See the table below.

USE THESE SAE VISCOSITY OILS

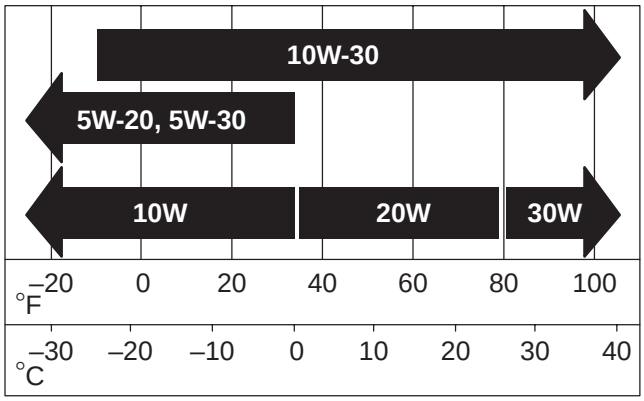

Checking the Oil Level

To check the oil level, refer to Checking the Crankcase Oil, page 18.

Changing the Oil

1. Start the vehicle and let it run for a few minutes to warm the oil.
2. Park the machine on a level surface, set the parking brake, turn the ignition off, and remove the key.
3. Raise the bed and secure it with the prop rod.
4. Disconnect the spark plug wires and battery cables.
5. Remove the drain plug (Fig. 26) and let the oil flow into a drain pan. When the oil has drained completely, install the drain plug and torque it to 13 ft.-lb. (17.6 N·m).

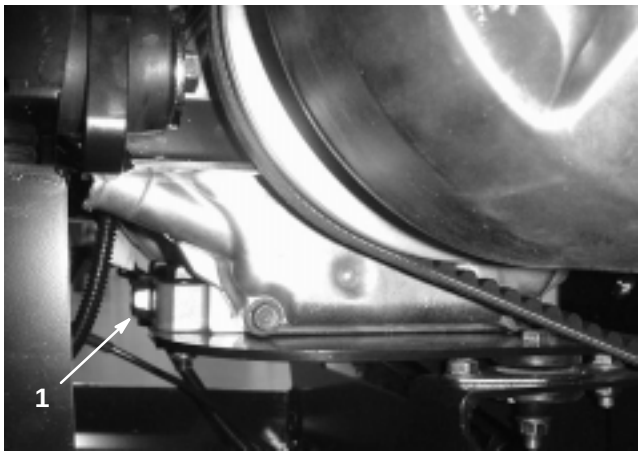

Figure 26

1. Engine oil drain plug

Note: Dispose of the used oil at a certified recycling center.

6. Clean around the oil dipstick and unscrew the cap.
7. Slowly pour approximately 80% of the specified amount of oil into the filler tube and check the oil level; refer to Checking the Crankcase Oil, page 18. Slowly add oil to bring the level to the “F” mark on the dipstick.
8. Install the dipstick.

Cleaning the Engine Cooling Areas

Clean the rotating screen, cooling fins, and external surfaces of the engine every 100 hours of operation or more often under extremely dusty and dirty conditions.

Important Operating the engine with a blocked rotating screen, dirty or plugged cooling fins, or cooling shrouds removed will cause engine damage due to overheating.

Important Never clean the engine with pressurized water because water could contaminate the fuel system.

Servicing the Air Cleaner

Service Interval/Specification

Check the air cleaner body for damage which could possibly cause an air leak. Replace a damaged air cleaner body.

Ensure the cover is sealing around the air cleaner body.

Air Cleaner Filter: Inspect after every 100 operating hours; replace after every 200 hours or sooner if dirty or damaged.

Note: Service the air cleaner more frequently (every few hours) if operating conditions are extremely dusty or sandy.

Removing the Filter Element

1. Park the machine on a level surface, set the parking brake, turn the ignition off, and remove the key.
2. Raise the bed and secure it with the prop rod.
3. Release the latches securing the air cleaner cover to the air cleaner body. Separate the cover from the body. Clean the inside of the air cleaner cover (Fig. 27).

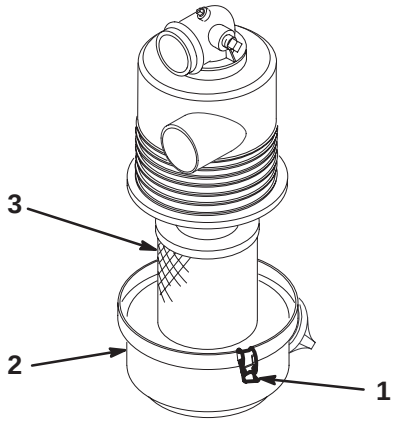

Figure 27

1. Air cleaner latches
2. Cover
3. Filter

4. Gently slide the filter out of the air cleaner body to reduce the amount of dust dislodged (Fig. 27). Avoid knocking the filter against the air cleaner body.
5. Inspect the filter and discard it if it is damaged.

Cleaning the Filter Element

Important Do not wash or reuse a damaged filter.

1. Washing method:

   A. Prepare a solution of filter cleaner and water and soak the filter element for about 15 minutes. Refer to the directions on the filter cleaner carton for complete information.

   B. After soaking the filter for 15 minutes, rinse it with clear water. Rinse the filter from the clean side to the dirty side.

   Important To prevent damage to the filter element, the maximum water pressure must not exceed 40 psi. (276 kPa)

   C. Dry the filter element using warm, flowing air at 160° F maximum, or allow the element to air-dry.

Important Do not use a light bulb to dry the filter element because damage could result.

2. Compressed air method:

   A. Blow compressed air from the inside to the outside of the dry filter element. Keep the air hose nozzle at least 2 inches from the filter and move the nozzle up and down while rotating the filter element.

   Important To prevent damage to the filter element, do not exceed 100 psi air pressure.

   B. Inspect the filter element for holes and tears by looking through the filter toward a bright light.

Installing the Filter Element

Important To prevent engine damage, always operate the engine with the complete air cleaner assembly installed.

1. Inspect the new filter for shipping damage. Check the sealing end of the filter.

Important Do not install a damaged filter.

2. Insert the new filter into air cleaner body. Ensure the filter is sealed properly by applying pressure to the outer rim of the filter when installing it. Do not press on the flexible center of the filter.
3. Install the cover and secure the latches.

Greasing the Machine

Service Interval/Specification

Lubricate all of the bearings and bushings every 100 hours or once a year, whichever occurs first. Grease them more frequently when using the vehicle for heavy-duty operations.

Grease Type: No. 2 General Purpose Lithium Base Grease

Where to Add Grease

The grease fitting locations are at the four tie rod ends (Fig. 28) and the two king pins (Fig. 29).

The throttle and the two brake pedal pivots (Fig. 30) are not greased at the factory and should only be greased when and if the pedals begin to stick.

1. Wipe the grease fitting clean so foreign matter cannot be forced into the bearing or bushing.
2. Pump grease into the bearing or bushing.
3. Wipe off excess grease.

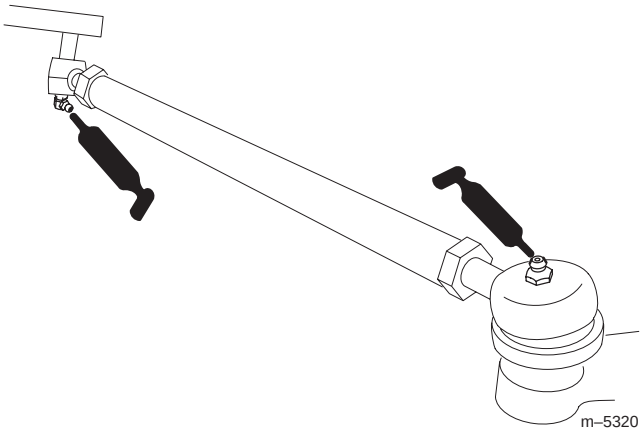

Figure 28

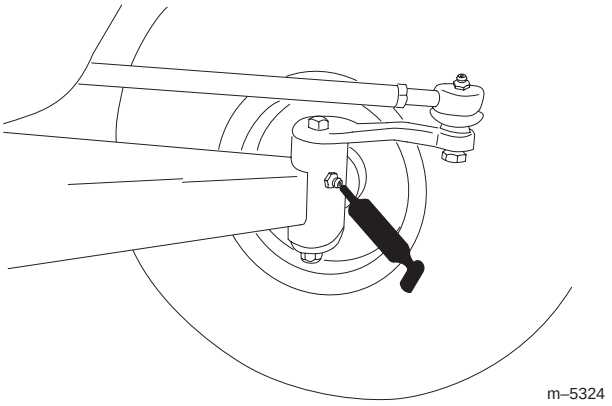

Figure 29

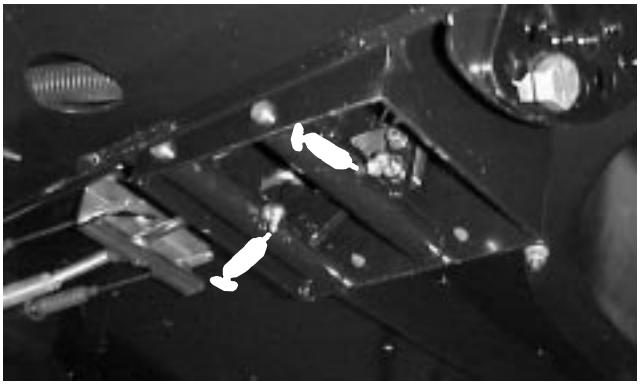

Figure 30

Servicing the Brakes

Inspecting the Brakes

Brakes are a critical safety component of the vehicle. As with all safety components, they should be closely inspected at regular intervals to ensure optimum performance and safety. The following inspections should be done every 100 hours:

- Inspect the brake shoes for wear or damage. If the lining (brake pad) thickness is less than 1/16 in. (1.6 mm), the brake shoes should be replaced.
- Inspect the backing plate and other components for signs of excessive wear or deformation. If any deformation is found, the appropriate components must be replaced.

Adjusting the Brake Pedal

Adjust the brake if the parking brake does not hold, the brake pedal travel is excessive, or braking power is not sufficient when the brake pedal is depressed. Check the adjustment every 200 hours.

1. Turn the ignition off and remove the key.
2. Raise the vehicle off the ground; see Jacking the Vehicle, page 27.
3. Tighten the cable adjusting screw, located beneath the floor panel, until the cables are snug in the brake equalizer (Fig. 31). Do not overtighten the screw. There should be some free play in the brake pedal before the brake engages.

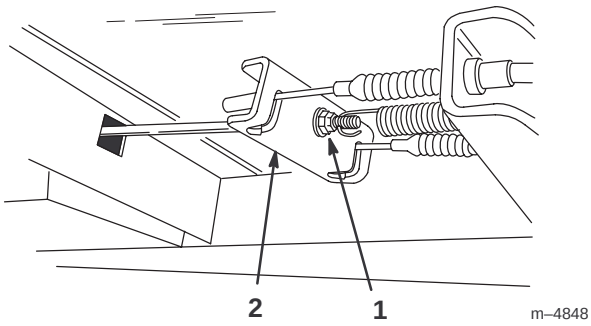

Figure 31

1. Cable adjusting screw
2. Brake equalizer

Inspecting the Tires

Check the tire condition at least every 100 hours of operation. Operating accidents, such as hitting curbs, can damage a tire or rim and also disrupt wheel alignment, so inspect tire condition after an accident.

Check the wheels to ensure that they are mounted securely. Torque the front bolts to 135–165 ft.-lb. (183–224 N·m) and the rear lug nuts to 45–65 ft.-lb. (61–88 N·m).

Adjusting the Front Suspension

The ride height of each side of the vehicle can be adjusted.

1. Jack the front end of the vehicle off of the ground; refer to Jacking the Vehicle, page 27.
2. Remove the travel limiting bolt (Fig. 32).

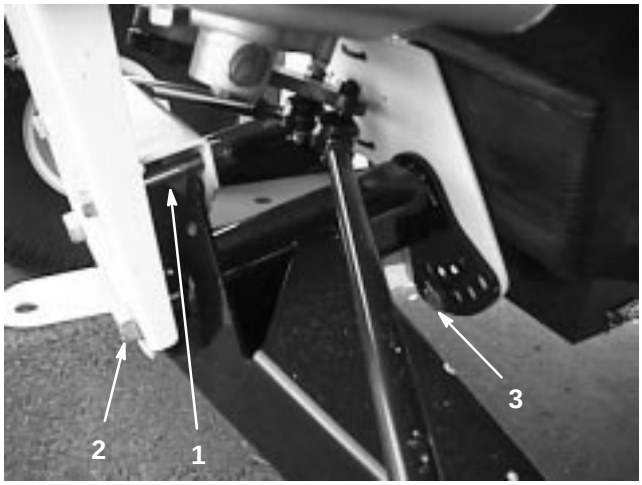

Figure 32

1. Travel limiting bolt
2. Centering bolt
3. Ride height adjustment bolt

3. Loosen the centering bolts in the front “A” frame (Fig. 32).
4. Remove the ride height adjustment bolt (Fig. 32).
5. Rotate the front “A” frame to the desired position (Fig. 32). The distance from the bottom side of the front hitch to the ground should be 7-3/4 to 8-1/2 in. (19.7 to 21.6 cm) with the tires inflated to 12 psi (83 kPa).
6. Replace the ride height adjustment bolt and the travel limiting bolt (Fig. 32).
7. Tighten and torque the centering bolts to 240–290 ft.-lbs. (325–393 N·m).
8. Tighten and torque the ride height adjustment bolt to 135–165 ft.-lbs. (183–224 N·m).
9. Repeat the procedure on the opposite side of the vehicle.

Servicing the Drive Belt

Service Interval/Specification

Check the condition and tension of the drive belt after the first day of operation and every 200 operating hours thereafter.

1. Park the machine on a level surface, shift into Neutral, set the parking brake, turn the ignition off, and remove the key.
2. Raise the bed and secure it with the prop rod.
3. Rotate and inspect the belt (Fig. 33) for excessive wear or damage. Replace the belt if necessary.

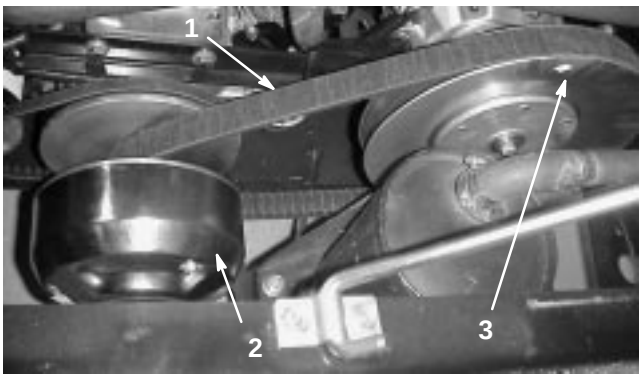

Figure 33

1. Drive belt
2. Primary clutch
3. Secondary clutch

Replacing the Drive Belt

1. Rotate and route the belt over the secondary clutch (Fig. 33).
2. Remove the belt from the primary clutch (Fig. 33).
3. To replace the belt, reverse the procedure.

Adjusting the Starter Generator Belt

Check the tension of the starter generator belt after the first day of operation and every 200 operating hours thereafter.

1. Park the machine on a level surface, set the parking brake, turn the ignition off, and remove the key.
2. Loosen the starter generator pivot bolt (Fig. 34).

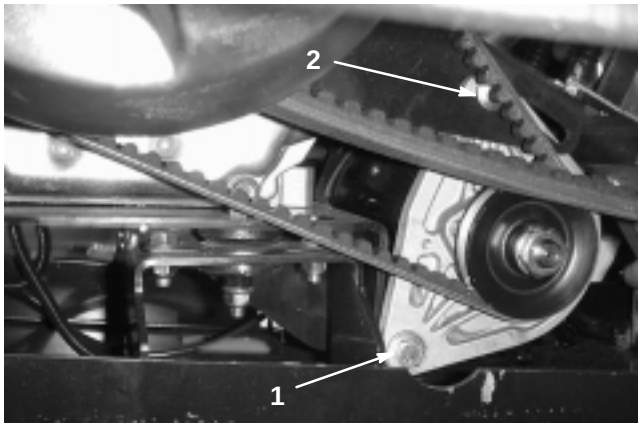

Figure 34

1. Generator pivot bolt
2. Adjusting carriage bolt

3. Wedge a pry bar between the engine mount and starter. Loosen the nut on the adjusting carriage bolt (Fig. 34).
4. Tilt the starter in the slot until the belt flexes 1/4 in. (6.4 mm) with 10 lb. (4.5 kg) of force.
5. Tighten the carriage bolt nut and remove the pry bar. Tighten the starter generator pivot bolt (Fig. 34).

Adjusting Front Wheel Toe-In

Check the front wheel toe-in after every 100 operating hours or annually, whichever occurs first.

1. Ensure that the distance from the bottom of the tongue to the ground is 7-3/4 to 8-1/2 in. (19.7 to 21.6 cm) when the tires are inflated to 12 psi. (83 kPa); refer to Adjusting the Front Suspension, page 31.
2. Measure the distance between both of the front tires at the axle height (at the front and rear of the wheels) (Fig. 35). The front measurement must be equal to the rear measurement ±1/4 in. (6.4 mm).

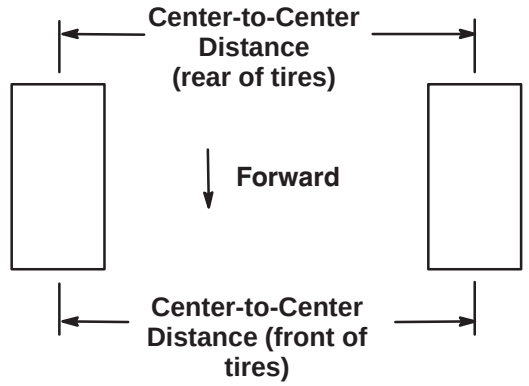

Figure 35

3. If the measurement is greater than 1/4 in. (6.4 mm), loosen the jam nuts at both ends of the tie rods (Fig. 36).

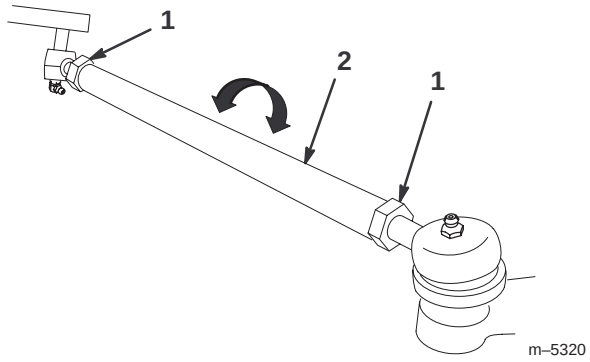

Figure 36

1. Jam nut
2. Tie rod

4. Rotate both tie rods to move the front of the tire inward or outward.
5. Tighten the tie rod jam nuts when the adjustment is correct.
6. Ensure that there is full travel of the steering wheel in both directions.

Servicing the Fuel System

Fuel Lines and Connections

Check the fuel lines and connections every 400 hours or yearly, whichever occurs first. Inspect them for deterioration, damage, or loose connections.

Replacing Fuel Filter

Replace the fuel filter after every 800 operating hours or yearly, whichever occurs first.

1. Raise the bed and support it with the prop rod.
2. Place a clean container under the fuel filter.
3. Remove the clamps securing the fuel filter to the fuel lines.

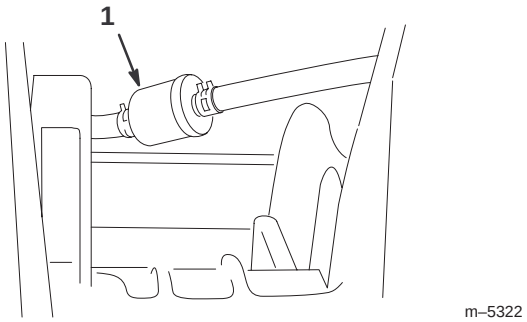

Figure 37

1. Fuel filter

4. Install the replacement fuel filter to the fuel lines with the clamps previously removed. Mount the filter so that the arrow points toward the carburetor.

Spark Plugs

Service Interval/Specification

Check the spark plugs after every 100 operating hours or yearly, whichever occurs first. Replace if necessary.

Type: Champion RN14YC (or equivalent)

Air Gap: 0.030 in. (0.762 mm)

Checking and Replacing the Spark Plug

Note: The spark plug usually lasts a long time; however, the plug should be removed and checked whenever the engine malfunctions.

1. Clean the area around the spark plugs so that foreign matter cannot fall into the cylinder when the spark plug is removed.
2. Pull the wires off of the spark plugs and remove the plugs from the cylinder head.

3. Check the condition of the side electrode, center electrode, and center electrode insulator to ensure that there is no damage.

Important A cracked, fouled, dirty, or malfunctioning spark plug must be replaced. Do not sand-blast, scrape, or clean electrodes by using a wire brush because grit may eventually release from the plug and fall into the cylinder. The result is usually a damaged engine.

4. Set the air gap between the center and side of the electrodes at 0.030 in. (0.762 mm) (Fig. 38). Install the correctly gapped spark plug and tighten the plug to 14 ft.-lb. (20 N·m).

5. Install the spark plug wires.

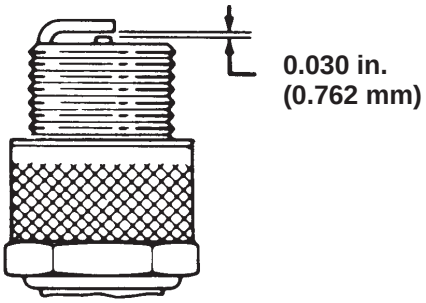

Figure 38

Changing the Transaxle Fluid

Change the transaxle fluid every 800 operating hours or yearly, whichever occurs first.

1. Position the vehicle on a level surface, set the parking brake, turn the ignition off, and remove the key.

2. Remove the drain plug from the right side of the reservoir (Fig. 39) and let the fluid flow into a drain pan. Install and tighten the plug when the fluid stops draining.

Note: Dispose of the used oil at a certified recycling center.

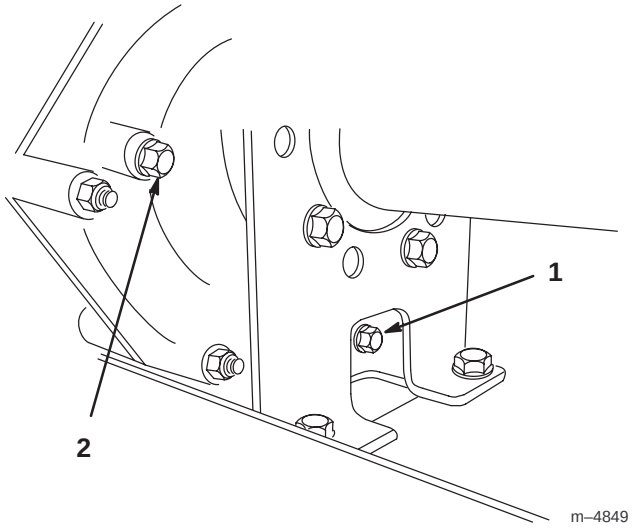

Figure 39

1. Drain plug
2. Level indicator hole

3. Fill the reservoir (Fig. 40) with approximately 1-1/2 qt. (1.4 liters) of SAE 10W30 motor oil or until the oil level is at the bottom of the level indicator hole (Fig. 39).

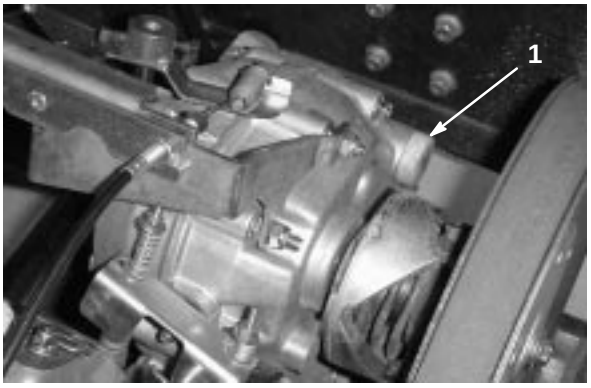

Figure 40

1. Oil fill

4. Start the engine and operate it to fill the system. Recheck the oil level and replenish it, if required.

Replacing the Fuses

There are 3 fuses in the electrical system. They are located beneath the bed in a box on the right hand side of the frame (Fig. 41).

Ignition System	10 amp.
Lights	10 amp.
Power Point	10 amp. (15 amp. max.)

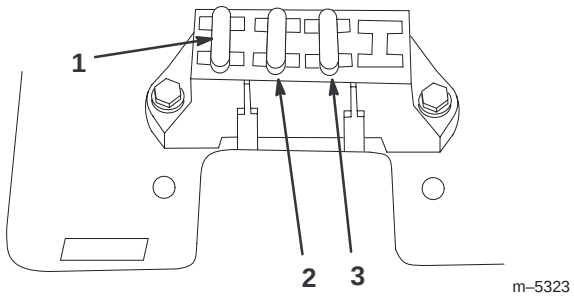

Figure 41

1. Ignition system
2. Lights
3. Power point

Replacing the Headlights

Specification: GE Headlight #H7610

1. Set the parking brake, turn the ignition off, and remove the key.
2. Reach beneath the dash and push the headlight out of the hood.
3. Remove the screws attaching the wire harness to the headlight.
4. Remove the rubber seal from around the headlight (Fig. 42). Discard the headlight.

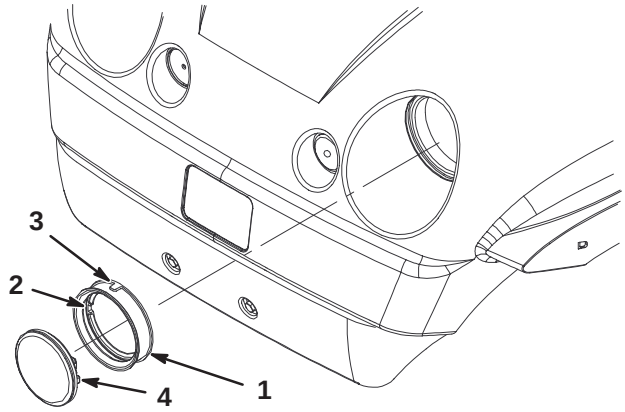

Figure 42

1. Rubber seal
2. Inside notch—align with the notch on the headlight
3. Outside notch—align with notch in hood
4. Headlight

5. Align the notch on the inside of the seal with the notch on the new headlight (Fig. 42). Slide the seal onto the headlight until the seal is firmly in place.
6. Attach the headlight to the wire harness using the previously removed screws.
7. Align the notch on the outside of the seal with the notch in the hood. Push the headlight and seal into the hood until it is firmly in place.

Note: Applying soapy water to the outside of the seal may aid in sliding the seal into the hood.

Servicing the Battery

Warning

Battery posts, terminals, and related accessories contain lead and lead compounds, chemicals known to the State of California to cause cancer and reproductive harm. *Wash hands after handling.*

Important Do not jump start the vehicle.

Service Interval/Specification

Always keep the battery clean and fully charged. Use a paper towel to clean the battery and battery box. If the battery terminals are corroded, clean them with a solution of four parts water and one part baking soda. Apply a light coating of grease to the battery terminals to prevent corrosion.

Voltage: 12 volt with 280 cold cranking Amps @ 0° F (–18° C).

Removing the Battery

1. Position the vehicle on a level surface, set the parking brake, turn the ignition off, and remove the key.
2. Raise the bed and secure it with the prop rod.
3. Unhook the battery strap.
4. Disconnect the negative (black) ground cable from the battery post.

Warning

Incorrect battery cable routing could damage the vehicle and cables, causing sparks. Sparks can cause the battery gasses to explode, resulting in personal injury.

- **Always *disconnect* the negative (black) battery cable before disconnecting the positive (red) cable.**
- **Always *reconnect* the positive (red) battery cable before reconnecting the negative (black) cable.**
- **Always keep the battery strap in place to protect and secure the battery.**

Warning

Battery terminals or metal tools could short against metal vehicle components, causing sparks. Sparks can cause the battery gasses to explode, resulting in personal injury.

- **When removing or installing the battery, do not allow the battery terminals to touch any metal parts of the vehicle.**
- **Do not allow metal tools to short between the battery terminals and metal parts of the vehicle.**

5. Disconnect the positive (red) cable from the battery post.
6. Remove the battery from the chassis.

Installing the Battery

1. Set the battery on the battery base so the battery posts are toward the rear of the vehicle.
2. Connect the positive (red) cable to the positive (+) battery post and the negative (black) cable to the negative (–) battery post using the bolts and wing nuts. Slide the rubber boot over the positive battery post.
3. Replace the rubber strap to secure the battery to the base.

Important Always keep the battery strap in place to protect and secure the battery.

Checking the Electrolyte Level

Check the electrolyte level every 50 operating hours or, if the machine is in storage, every 30 days.

1. Raise the bed and secure it with the prop rod.
2. Remove the filler caps. If the electrolyte is not up to the fill line, add the required amount of distilled water; refer to Adding Water to the Battery, page 37.

Danger

Battery electrolyte contains sulfuric acid which is a deadly poison and causes severe burns.

- **Do not drink electrolyte and avoid contact with skin, eyes or clothing. Wear safety glasses to shield your eyes and rubber gloves to protect your hands.**
- **Fill the battery where clean water is always available for flushing the skin.**

Adding Water to the Battery

The best time to add distilled water to the battery is just before you operate the machine. This lets the water mix thoroughly with the electrolyte solution.

1. Clean the top of the battery with a paper towel.
2. Remove the filler caps from the battery and slowly fill each cell with distilled water until the level is up to the fill line. Replace the filler caps.

Important Do not overfill the battery. Electrolyte will overflow onto other parts of the vehicle and severe corrosion and deterioration will result.

Charging the Battery

Important Always keep the battery fully charged (1.260 specific gravity). This is especially important to prevent battery damage when the temperature is below 32°F (0°C).

1. Remove the battery from the chassis; refer to Removing the Battery, page 36.
2. Connect a 3 to 4 amp battery charger to the battery posts. Charge the battery at a rate of 3 to 4 amperes for 4 to 8 hours (12 volts). Do not overcharge the battery.

Warning

Charging the battery produces gasses that can explode.

Never smoke near the battery and keep sparks and flames away from battery.

3. Install the battery in the chassis; refer to Installing the Battery, page 36.

Storing the Battery

If the machine will be stored for more than 30 days, remove the battery and charge it fully. Either store it on the shelf or on the machine. Leave the cables disconnected if it is stored on the machine. Store the battery in a cool atmosphere to avoid quick deterioration of the charge in the battery. To prevent the battery from freezing, make sure it is fully charged.

Washing the Vehicle

The vehicle should be washed as needed. Use water alone or with a mild detergent. A rag may be used, however the hood will loose some of its luster.

Important Pressurized water is not recommended when washing the machine. It may damage the electrical system, loosen important decals, or wash away necessary grease at friction points. Avoid excessive use of water, especially near the control panel, engine, and battery.

Electrical Schematic

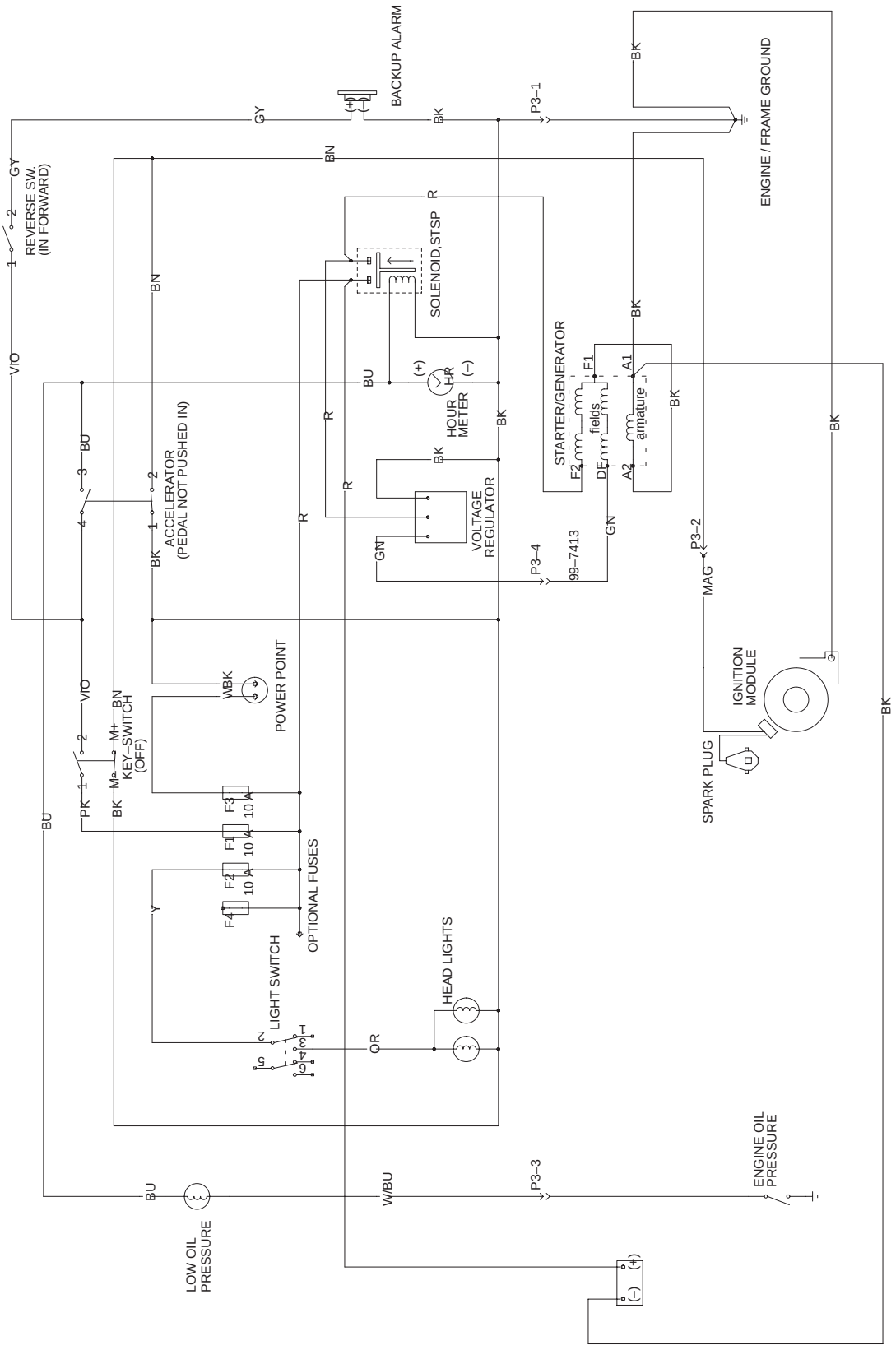

The Toro General Commercial Products Warranty

A Two-Year Limited Warranty

Conditions and Products Covered

The Toro Company and its affiliate, Toro Warranty Company, pursuant to an agreement between them, jointly warrant your 1996 or newer Toro Commercial Product ("Product") purchased after January 1, 1997, to be free from defects in materials or workmanship for two years or 1500 operational hours*, whichever occurs first. Where a warrantable condition exists, we will repair the Product at no cost to you including diagnosis, labor, parts, and transportation. This warranty begins on the date the Product is delivered to the original retail purchaser.

* Product equipped with hour meter

Instructions for Obtaining Warranty Service

You are responsible for notifying the Commercial Products Distributor or Authorized Commercial Products Dealer from whom you purchased the Product as soon as you believe a warrantable condition exists.

If you need help locating a Commercial Products Distributor or Authorized Dealer, or if you have questions regarding your warranty rights or responsibilities, you may contact us at:

Toro Commercial Products Service Department
Toro Warranty Company
8111 Lyndale Avenue South
Bloomington, MN 55420-1196
952-888-8801 or 800-982-2740
E-mail: commercial.service@toro.com

Owner Responsibilities

As the Product owner, you are responsible for required maintenance and adjustments stated in your operator's manual. Failure to perform required maintenance and adjustments can be grounds for disallowing a warranty claim.

Items and Conditions Not Covered

Not all product failures or malfunctions that occur during the warranty period are defects in materials or workmanship. This express warranty does not cover the following:

- Product failures which result from the use of non-Toro replacement parts, or from installation and use of add-on, modified, or unapproved accessories
- Product failures which result from failure to perform required maintenance and/or adjustments
- Product failures which result from operating the Product in an abusive, negligent or reckless manner
- Parts subject to consumption through use unless found to be defective. Examples of parts which are consumed, or used up, during normal Product operation include, but are not limited to, blades, reels, bedknives, tines, spark plugs, castor wheels, tires, filters, belts, etc.
- Failures caused by outside influence. Items considered to be outside influence include, but are not limited to, weather, storage practices, contamination, use of unapproved coolants, lubricants, additives, or chemicals, etc.
- Normal "wear and tear" items. Normal "wear and tear" includes, but is not limited to, damage to seats due to wear or abrasion, worn painted surfaces, scratched decals or windows, etc.

Parts

Parts scheduled for replacement as required maintenance are warranted for the period of time up to the scheduled replacement time for that part.

Parts replaced under this warranty become the property of Toro. Toro will make the final decision whether to repair any existing part or assembly or replace it. Toro may use factory remanufactured parts rather than new parts for some warranty repairs.

General Conditions

Repair by an Authorized Toro Distributor or Dealer is your sole remedy under this warranty.

Neither The Toro Company nor Toro Warranty Company is liable for indirect, incidental or consequential damages in connection with the use of the Toro Products covered by this warranty, including any cost or expense of providing substitute equipment or service during reasonable periods of malfunction or non-use pending completion of repairs under this warranty. Except for the Emissions warranty referenced below, if applicable, there is no other express warranty. All implied warranties of merchantability and fitness for use are limited to the duration of this express warranty.

Some states do not allow exclusions of incidental or consequential damages, or limitations on how long an implied warranty lasts, so the above exclusions and limitations may not apply to you.

This warranty gives you specific legal rights, and you may also have other rights which vary from state to state.

Note regarding engine warranty: The Emissions Control System on your Product may be covered by a separate warranty meeting requirements established by the U.S. Environmental Protection Agency (EPA) and/or the California Air Resources Board (CARB). The hour limitations set forth above do not apply to the Emissions Control System Warranty. Refer to the Engine Emission Control Warranty Statement printed in your operator's manual or contained in the engine manufacturer's documentation for details.

Countries Other than the United States or Canada

Customers who have purchased Toro products exported from the United States or Canada should contact their Toro Distributor (Dealer) to obtain guarantee policies for your country, province, or state. If for any reason you are dissatisfied with your Distributor's service or have difficulty obtaining guarantee information, contact the Toro importer. If all other remedies fail, you may contact us at Toro Warranty Company.

Part No. 374-0031 Rev. –