Form No. 3451-818 Rev A

TORO®

Count on it.

Operator's Manual

# Workman® GTX EFI Utility Vehicle with Extended Chassis

**Model No. 07411EX—Serial No. 410500000 and Up**

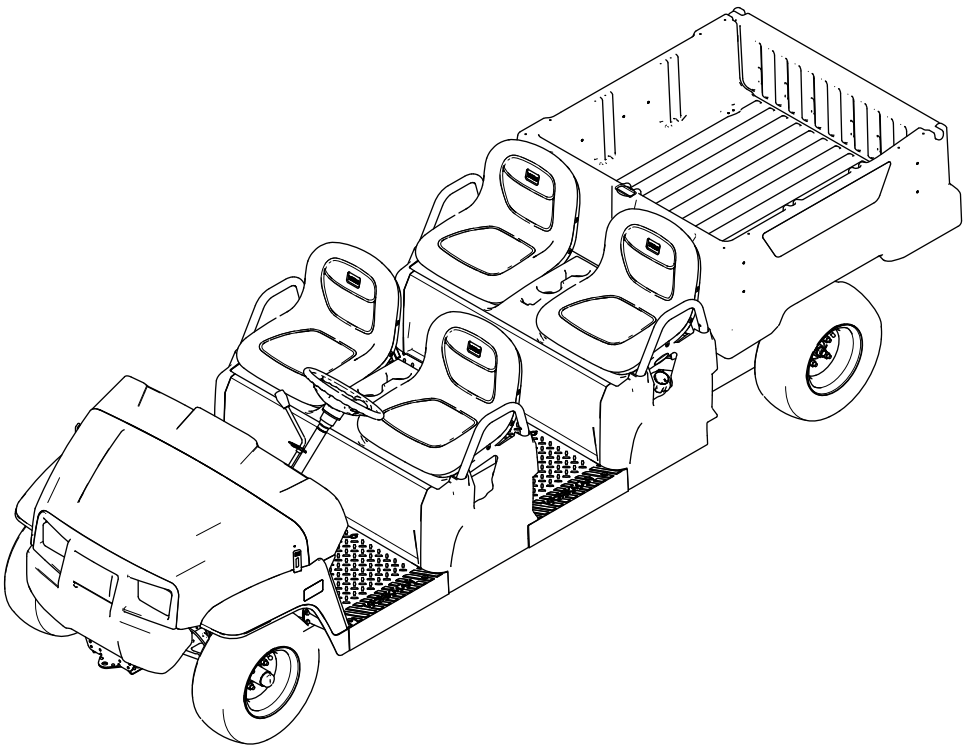

Register at www.Toro.com.
Original Instructions (EN)

*3451-818*

This product complies with all relevant European directives; for details, please see the separate product specific Declaration of Conformity (DOC) sheet.

It is a violation of California Public Resource Code Section 4442 or 4443 to use or operate the engine on any forest-covered, brush-covered, or grass-covered land unless the engine is equipped with a spark arrester, as defined in Section 4442, maintained in effective working order or the engine is constructed, equipped, and maintained for the prevention of fire.

The enclosed engine owner's manual is supplied for information regarding the US Environmental Protection Agency (EPA) and the California Emission Control Regulation of emission systems, maintenance, and warranty. Replacements may be ordered through the engine manufacturer.

**⚠ WARNING**

**CALIFORNIA**
**Proposition 65 Warning**

**The engine exhaust from this product contains chemicals known to the State of California to cause cancer, birth defects, or other reproductive harm.**

**Battery posts, terminals, and related accessories contain lead and lead compounds, chemicals known to the State of California to cause cancer and reproductive harm. Wash hands after handling.**

# Introduction

This utility vehicle is intended to be primarily used off-highway to transport people and material loads. Using this product for purposes other than its intended use could prove dangerous to you and bystanders.

Read this information carefully to learn how to operate and maintain your product properly and to avoid injury and product damage. You are responsible for operating the product properly and safely.

Visit www.Toro.com for product safety and operation training materials, accessory information, help finding a dealer, or to register your product.

Whenever you need service, genuine Toro parts, or additional information, contact an Authorized Service Dealer or Toro Customer Service and have the model and serial numbers of your product ready. Figure 1 identifies the location of the model and serial numbers on the product. Write the numbers in the space provided.

***Important:*** **With your mobile device, you can scan the QR code on the serial number decal (if equipped) to access warranty, parts, and other product information.**

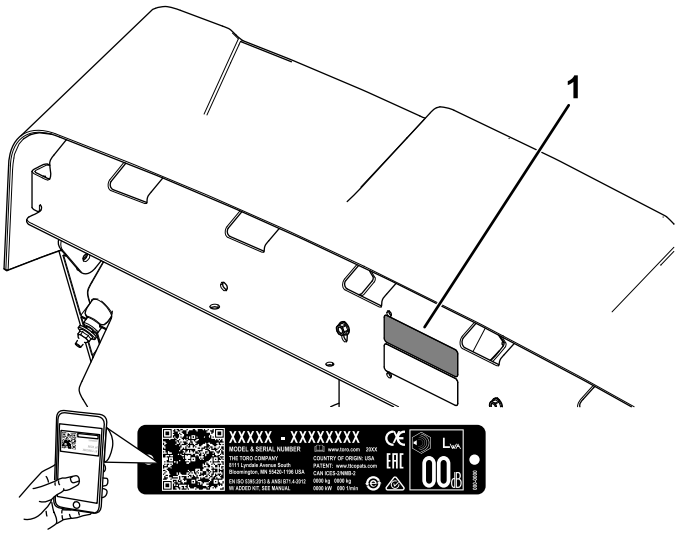


g282597

**Figure 1**

1. Model and serial number location

**Model No.** _____

**Serial No.** _____

This manual uses 2 words to highlight information. **Important** calls attention to special mechanical information and **Note** emphasizes general information worthy of special attention.

**© 2022—The Toro® Company**
**8111 Lyndale Avenue South**
**Bloomington, MN 55420**



**Contact us at www.Toro.com.**
**Printed in the USA**
**All Rights Reserved**

The safety-alert symbol (Figure 2) appears both in this manual and on the machine to identify important safety messages that you must follow to avoid accidents. This symbol will appear with the word **Danger**, **Warning**, or **Caution**.

- **Danger** indicates an imminently hazardous situation which, if not avoided, **will** result in death or serious injury.
- **Warning** indicates a potentially hazardous situation which, if not avoided, **could** result in death or serious injury.
- **Caution** indicates a potentially hazardous situation which, if not avoided, **may** result in minor or moderate injury.



g000502

**Figure 2**
Safety-alert symbol

# Contents


Safety ..... 5
General Safety ..... 5
Safety and Instructional Decals ..... 6
Setup ..... 9
1 Installing the Steering Wheel (International Models Only) ..... 9
2 Checking the Fluid Levels and Tire Pressure ..... 9
3 Burnishing the Brakes ..... 10
4 Reading the Manual and Viewing the Setup Material ..... 10
Product Overview ..... 11
Controls ..... 11
Specifications ..... 14
Attachments/Accessories ..... 14
Before Operation ..... 15
Before Operation Safety ..... 15
Performing Daily Maintenance ..... 15
Checking the Tire Pressure ..... 15
Adding Fuel ..... 16
Breaking in a New Machine ..... 16
During Operation ..... 17
During Operation Safety ..... 17
Operating the Cargo Bed ..... 19
Using the Rear Cargo Bed Accessory Mount ..... 21
Loading the Cargo Bed ..... 22
Starting the Engine ..... 22
Stopping the Machine ..... 23
Parking the Machine ..... 23
After Operation ..... 23
After Operation Safety ..... 23
Hauling the Machine ..... 23
Towing the Machine ..... 24
Towing a Trailer ..... 24
Maintenance ..... 25
Maintenance Safety ..... 25
Recommended Maintenance Schedule(s) ..... 26
Daily Maintenance Checklist ..... 28
Maintaining the Machine under Special Operating Conditions ..... 28
Pre-Maintenance Procedures ..... 29
Preparing the Machine for Maintenance ..... 29
Lifting the Machine ..... 29
Accessing the Hood ..... 30
Raising and Lowering the Seat Assembly ..... 30
Removing a Bucket Seat ..... 30
Installing a Bucket Seat ..... 31
Removing a Bench Cushion ..... 31
Installing a Bench Cushion ..... 31
Lubrication ..... 32
Greasing the Front Wheel Bearings ..... 32
Engine Maintenance ..... 35
Engine Safety ..... 35
Servicing the Air Cleaner ..... 35
Servicing the Engine Oil ..... 37
Servicing the Spark Plug ..... 38
Adjusting the High/Low Idle ..... 39
Fuel System Maintenance ..... 39
Inspecting Fuel Lines and Connections ..... 39
Replacing the Fuel Filter ..... 40
Servicing the Carbon Canister ..... 40
Electrical System Maintenance ..... 41
Electrical System Safety ..... 41
Servicing the Battery ..... 41
Replacing the Fuses ..... 43
Maintaining the Headlights ..... 44
Drive System Maintenance ..... 45
Maintaining the Tires ..... 45
Inspecting the Steering and Suspension Components ..... 45
Adjusting the Front Wheel Alignment ..... 46
Checking the Transaxle-Fluid Level ..... 47
Changing the Transaxle Fluid ..... 47
Checking the Neutral Gear-Shift Position ..... 48
Adjusting the Neutral Gear-Shift Position ..... 48
Maintaining the Primary Drive Clutch ..... 49
Reducing the Top Speed ..... 49
Cooling System Maintenance ..... 50
Cooling System Safety ..... 50
Cleaning the Engine-Cooling Areas ..... 50
Brake Maintenance ..... 51
Checking the Parking Brake ..... 51
Adjusting the Parking Brake ..... 51
Checking the Brake-Fluid Level ..... 51
Inspecting the Brakes ..... 52
Replacing the Service and Parking-Brake Pads ..... 52
Changing the Brake Fluid ..... 52
Belt Maintenance ..... 53
Servicing the Drive Belt ..... 53
Adjusting the Starter-Generator Belt ..... 53
Chassis Maintenance ..... 54
Adjusting the Cargo-Bed Latches ..... 54
Cleaning ..... 54
Washing the Machine ..... 54
Storage ..... 55
Storage Safety ..... 55
Storing the Machine ..... 55

# Safety

This machine has been designed in accordance with the requirements of SAE J2258 (Nov 2016).

# General Safety

This product is capable of causing personal injury. Always follow all safety instructions to avoid serious personal injury.

- Read and understand the contents of this *Operator's Manual* before you start the machine. Ensure that everyone using this product knows how to use it and understands the warnings.
- Use your full attention while operating the machine. Do not engage in any activity that causes distractions; otherwise, injury or property damage may occur.
- Do not put your hands or feet near moving components of the machine.
- Do not operate the machine without all guards and other safety protective devices in place and working on the machine.
- Keep bystanders and children out of the operating area. Never allow children to operate the machine.
- Stop and shut off the machine and remove the key before servicing or fueling.

Improperly using or maintaining this machine can result in injury. To reduce the potential for injury, comply with these safety instructions and always pay attention to the safety-alert symbol ⚠, which means Caution, Warning, or Danger—personal safety instruction. Failure to comply with these instructions may result in personal injury or death.

# Safety and Instructional Decals

Safety decals and instructions are easily visible to the operator and are located near any area of potential danger. Replace any decal that is damaged or missing.

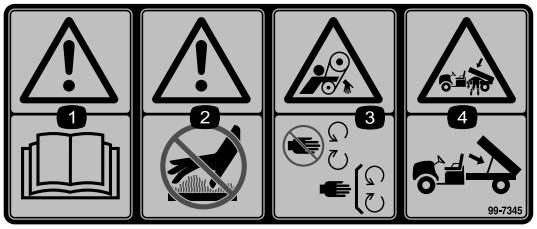


decal99-7345

**99-7345**

1. Warning—read the *Operator's Manual*.
2. Warning—do not touch the hot surface.
3. Entanglement hazard, belt—stay away from moving parts; keep all guards in place.
4. Crushing hazard, cargo box—use the prop rod to support the cargo bed.

---

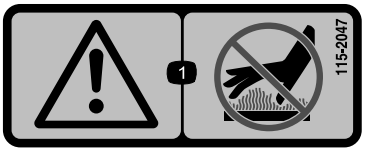


decal115-2047

**115-2047**

1. Warning—do not touch the hot surface.

---

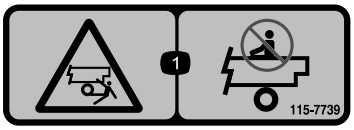


decal115-7739

**115-7739**

1. Falling, crushing hazard—do not carry passengers.

---




decal120-9570

**120-9570**

1. Warning—stay away from moving parts; keep all guards and shields in place.

---

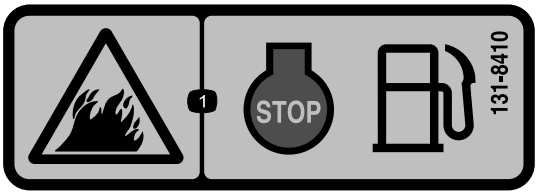


decal131-8410

**131-8410**

1. Fire hazard—shut off the engine before fueling.

---

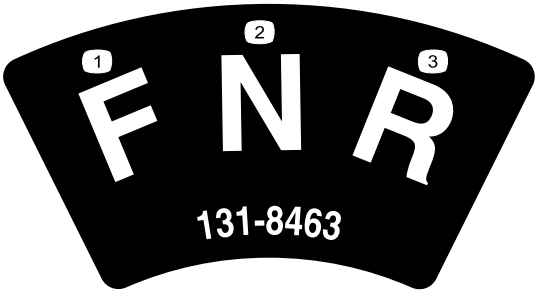


decal131-8463

**131-8463**

1. Forward
2. Neutral
3. Reverse

---

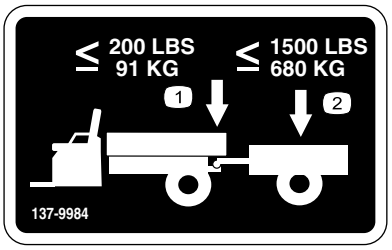


decal137-9984

**137-9984**

1. Do not exceed a tongue weight of 91 kg (200 lb).
2. Do not exceed a transport load of 680 kg (1,500 lb).

---

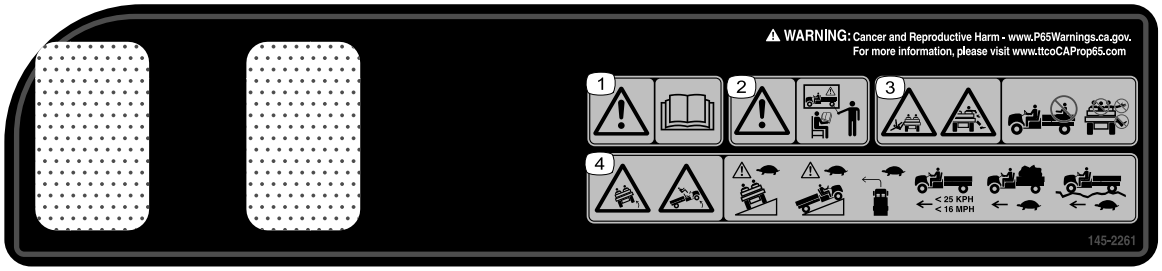


decal145-2261

**145-2261**

1. Warning—read the *Operator's Manual*.
2. Warning—receive proper training before operating the machine.
3. Falling hazard; severing hazard of limbs—do not carry passengers in the bed; do not carry extra passengers in between the seats; do not put your arms or legs outside of the machine while operating.
4. Tipping hazard—drive slowly across or up slopes; take turns slowly; do not exceed speeds of 25 kph (16 mph); drive slowly when hauling cargo; drive slowly on uneven terrain.

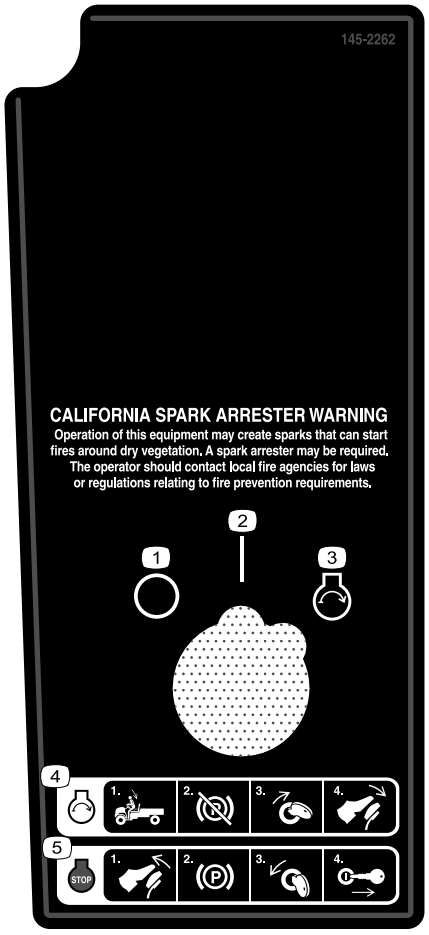


decal145-2262

**145-2262**

EFI Models Only

1. Off
2. On
3. Engine—start
4. Starting the engine—1) Sit in the driver's seat; 2) Disengage the parking brake; 3) Turn the key switch to the start position; 4) Push down on the pedal.
5. Shutting off the engine—1) Release the pedal; 2) Engage the parking brake; 3) Turn the key switch to the off position; 4) Remove the key from the key switch.

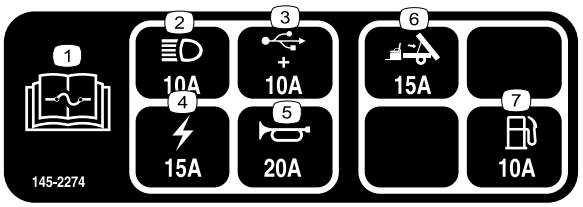


decal145-2274

**145-2274**

EFI Models Only

1. Read the *Operator's Manual* for fuse information.
2. Headlights (10 A)
3. USB (10 A)
4. Electric (15 A)
5. Horn (20 A)
6. Bed lift (15 A)
7. Fuel (10 A)

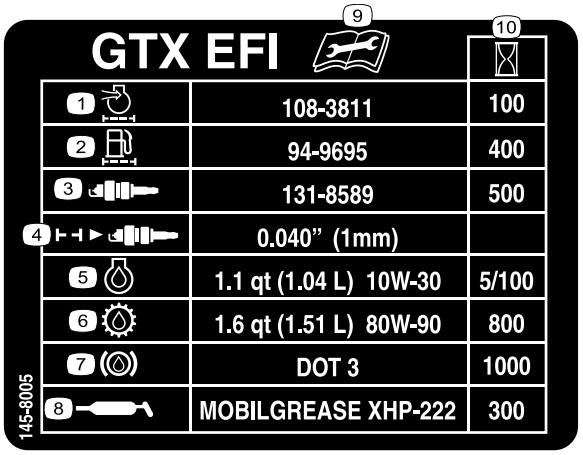


decal145-8005

**145-8005**

EFI Models Only

1. Engine intake/air filter
2. Fuel filter
3. Spark plug
4. Spark plug air gap
5. Engine oil
6. Transmission fluid
7. Brake fluid
8. Lubricant
9. Read the *Operator's Manual* before performing maintenance.
10. Change interval (hours)

# Setup

## Loose Parts

Use the chart below to verify that all parts have been shipped.

| Procedure | Description | Qty. | Use |
|---|---|---|---|
| 1 | Steering wheel<br>Steering wheel cover<br>Washer (1/2 inch)<br>Dust cover | 1<br>1<br>1<br>1 | Install the steering wheel (International models only). |
| 2 | No parts required | – | Check the fluid levels and tire pressure. |
| 3 | No parts required | – | Burnish (break-in) the brakes. |
| 4 | Operator's Manual<br>Engine owner's manual<br>Registration card<br>Predelivery Inspection Form<br>Certificate of Quality<br>Key | 1<br>1<br>1<br>1<br>1<br>2 | Read the Operator's Manual and view the setup material before operating the machine. |

**Note:** Determine the left and right sides of the machine from the normal operating position.

# 1

# Installing the Steering Wheel (International Models Only)

**Parts needed for this procedure:**

| | |
|---|---|
| 1 | Steering wheel |
| 1 | Steering wheel cover |
| 1 | Washer (1/2 inch) |
| 1 | Dust cover |

## Procedure

1. If the cover is installed, remove it from the hub of the steering wheel (Figure 3).
2. Remove the locknut (1/2 inch) from the steering shaft (Figure 3).
3. Slide the steering wheel, dust cover, and washer (1/2 inch) onto the steering shaft (Figure 3).

   **Note:** With the front wheels straight, orient the steering wheel so that the smaller spoke on the steering wheel is vertical.
4. Secure the steering wheel to the shaft with the locknut (1/2 inch) and tighten it to 18 to 30 N·m (13 to 22 ft-lb).
5. Install the cover on the steering wheel (Figure 3).

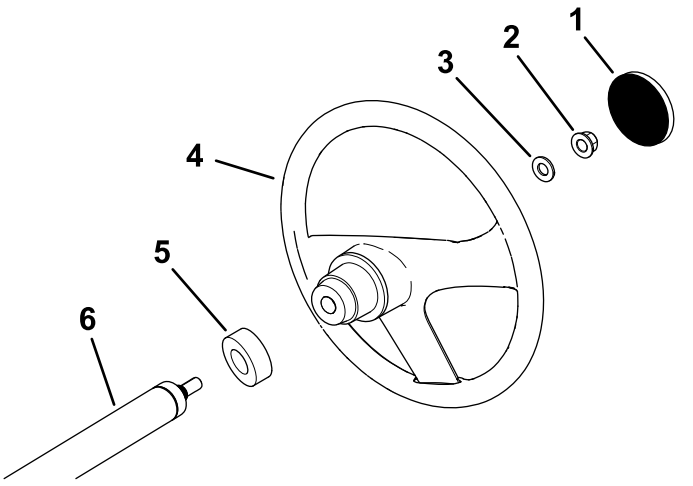


**Figure 3**

1. Steering wheel cover
2. Locknut (1/2 inch)
3. Washer (1/2 inch)
4. Steering wheel
5. Dust cover
6. Steering shaft

# 2

# Checking the Fluid Levels and Tire Pressure

**No Parts Required**

## Procedure

1. Check the engine-oil level before and after you first start the engine; refer to Checking the Engine-Oil Level (page 37).
2. Check the brake-fluid level before you first start the engine; refer to Checking the Brake-Fluid Level (page 51).
3. Check the transaxle-fluid level before you first start the engine; refer to Checking the Transaxle-Fluid Level (page 47).
4. Check the air pressure in the tires; refer to Checking the Tire Pressure (page 15).

# 3

# Burnishing the Brakes

**No Parts Required**

## Procedure

To ensure optimum performance of the brake system, burnish (break-in) the brakes before use.

1. Bring the machine up to full speed, apply the brakes to rapidly stop the machine without locking up the tires.
2. Repeat this procedure 10 times, waiting 1 minute between stops, to avoid overheating the brakes.

   ***Important:*** **This procedure is most effective if the machine is loaded with 227 kg (500 lb).**

# 4

# Reading the Manual and Viewing the Setup Material

**Parts needed for this procedure:**

| | |
|---|---|
| 1 | *Operator's Manual* |
| 1 | Engine owner's manual |
| 1 | Registration card |
| 1 | *Predelivery Inspection Form* |
| 1 | Certificate of Quality |
| 2 | Key |

## Procedure

- Read the *Operator's Manual* and the engine owner's manual.
- Fill out the registration card.
- Complete the *Predelivery Inspection Form*.
- Review the *Certificate of Quality*.

# Product Overview

## Controls

Become familiar with all the controls before you start the engine and operate the machine.

### Control Panel

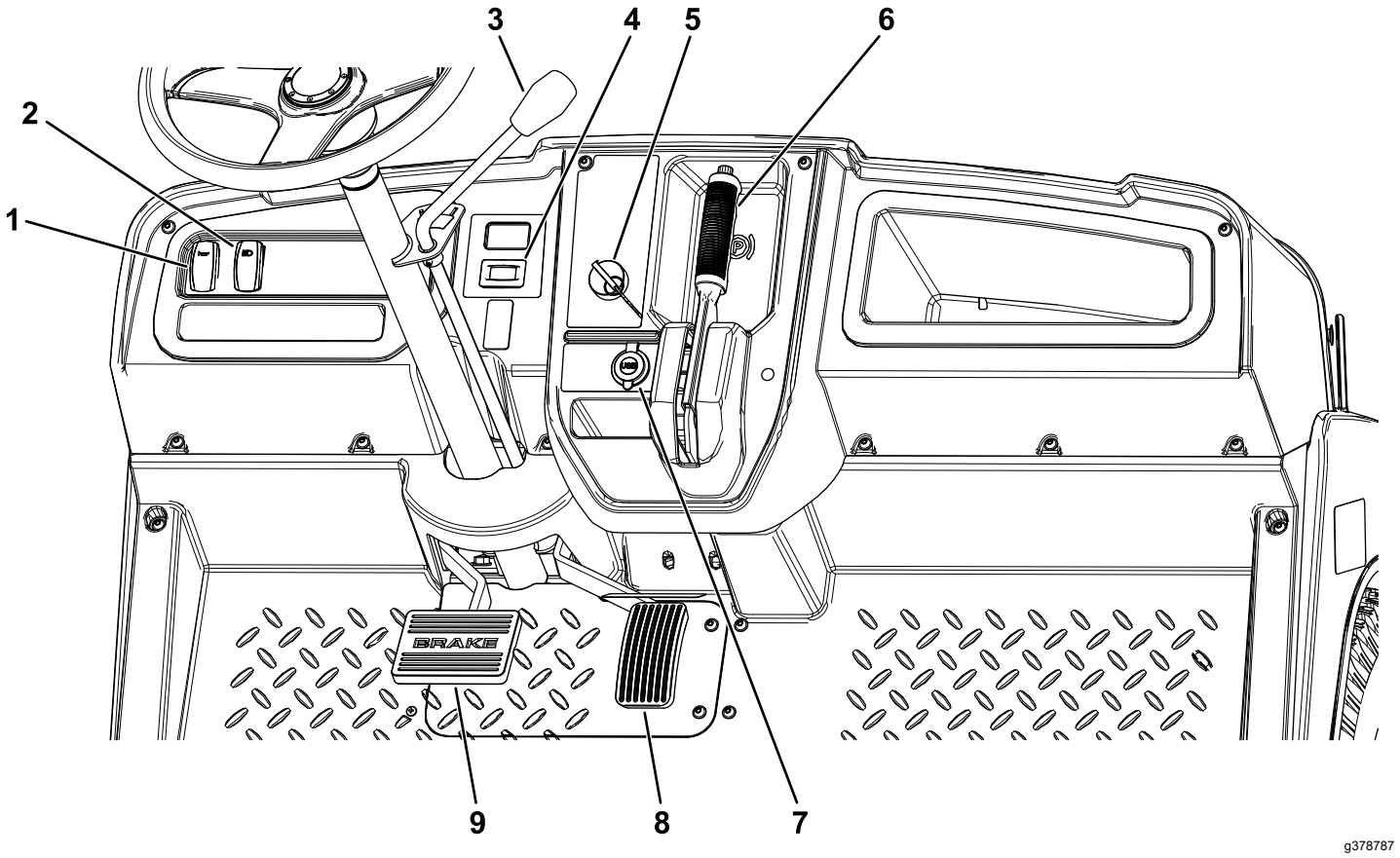


**Figure 4**

1. Horn switch
2. Light switch
3. Gear-shift lever
4. Hour meter
5. Key switch
6. Parking-brake lever
7. USB power point
8. Accelerator pedal
9. Brake pedal

## Accelerator Pedal

Use the accelerator pedal (Figure 4) to vary the ground speed of the machine. Pressing down the accelerator pedal starts the engine. Pressing the pedal farther increases the ground speed. Releasing the pedal slows the machine, and the engine shuts off.

**Note:** The maximum forward speed is 26 km/h (16 mph).

## Brake Pedal

Use the brake pedal to stop or slow the machine (Figure 4).

**⚠ CAUTION**

**Operating a machine with worn or incorrectly adjusted brakes can may result in personal injury.**

**If the brake pedal travels to within 25 mm (1 inch) of the machine floor board, adjust or repair the brakes.**

## Key Switch

The key switch is located at the lower, right corner of the dash panel (Figure 4).

The key switch has 3 positions: OFF, ON, and START.

There are 2 modes of starting the machine; refer to Starting the Engine (page 22).

## Parking-Brake Lever

The parking-brake lever is located on the control panel (Figure 4).

Whenever you shut off the engine, engage the parking brake to prevent the machine from accidentally moving. If the machine is parked on a steep grade, ensure that you engage the parking brake.

To engage the parking brake, pull the parking-brake lever toward you (Figure 5).

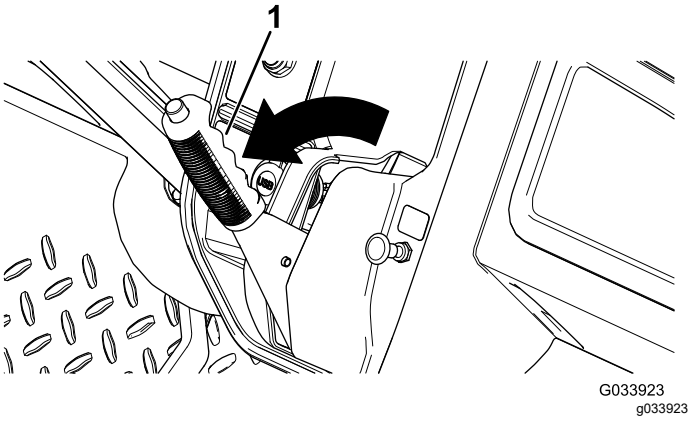


**Figure 5**

1. Parking-brake lever

To disengage the parking brake, push down the button on top of the parking-brake lever, pull the parking-brake lever toward you to release pressure, and then push the parking-brake lever forward (Figure 6).

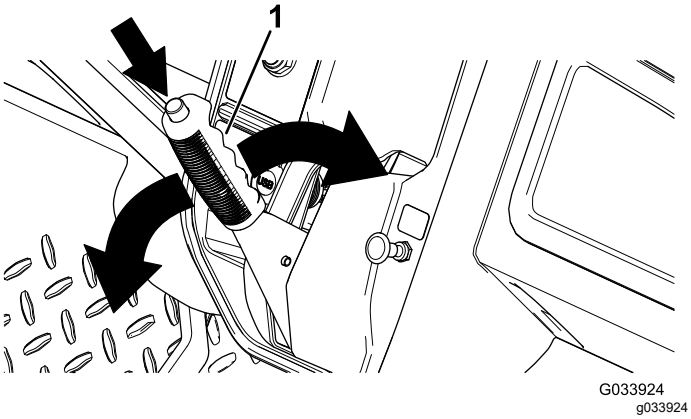


**Figure 6**

1. Parking-brake lever

## Gear-Shift Lever and Gear-Shift Indicator

The gear-shift lever can be set to 3 positions on the gear-shift indicator: FORWARD, REVERSE, and NEUTRAL (Figure 7).

**Note:** The engine starts and runs in any of the 3 positions.

From the NEUTRAL position, you can move the gear-shift lever left to the FORWARD position or right to the REVERSE position (Figure 7).

***Important:*** **Always stop the machine before changing gears.**

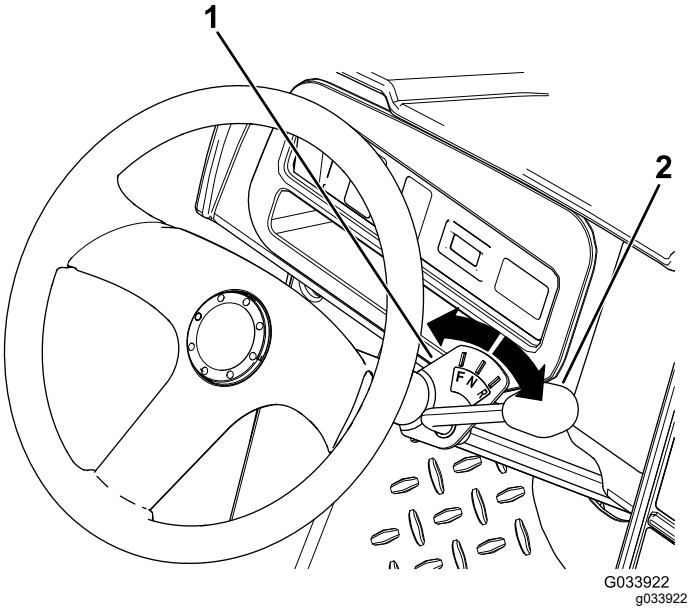


**Figure 7**

1. Gear-shift indicator
2. Gear-shift lever

## Horn Switch

The horn switch is located on the control panel (Figure 4). Press the horn switch to sound the horn.

## Light Switch

Use the light switch (Figure 4) to illuminate the headlights. Push the light switch up to turn on the headlights. Push the light switch down to turn off the lights.

## Hour Meter

The hour meter is located to the right of the light switch (Figure 4). Use the hour meter to find out the total number of engine hours. The hour meter starts to function whenever you turn the key switch to the ON position, START position, or if the engine is running.

**Note:** When the machine is running, the hour meter blinks continuously, recording usage.

## USB Power Point

The USB power point is located to the left of the parking-brake lever (Figure 4). Use the power point to power mobile devices.

***Important:*** **When you are not using the USB power point, insert the rubber plug to prevent damage to the power point.**

## Fuel Gauge

The fuel gauge (Figure 8) is located on the fuel tank in the filler cap, at the left side of the machine. The gauge displays the amount of fuel in the tank.

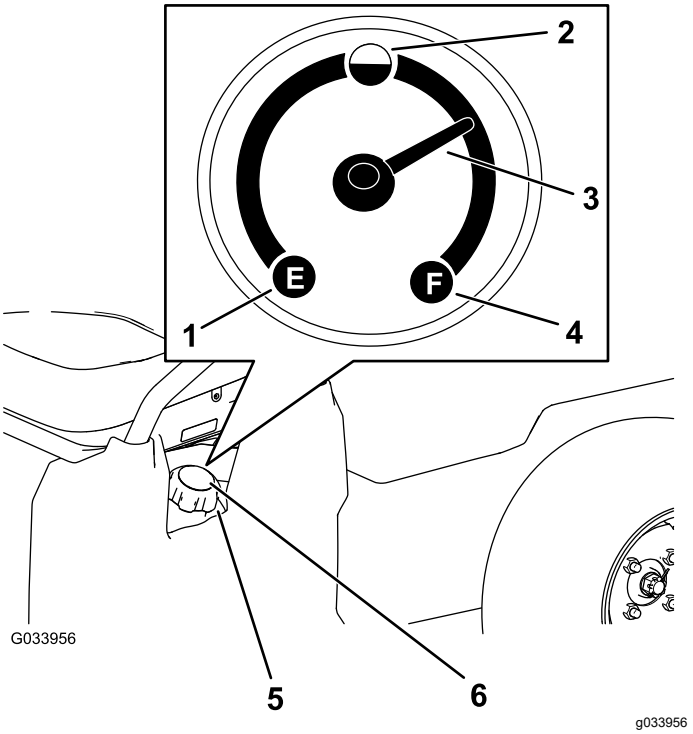


**Figure 8**

1. Empty
2. Half full
3. Needle
4. Full
5. Fuel-tank cap
6. Fuel gauge

## Passenger Handholds

The passenger handholds are located on the outside of each seat (Figure 9).

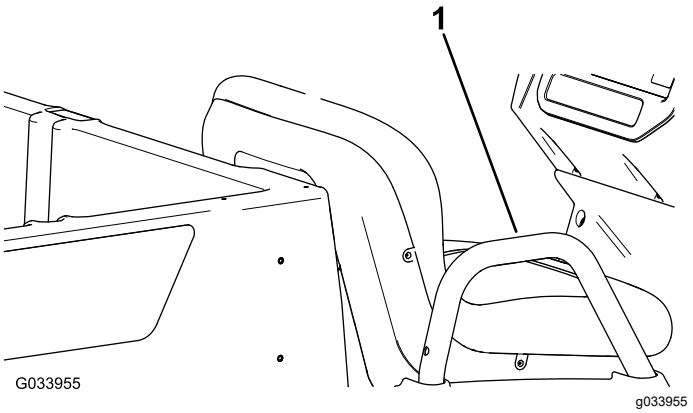


**Figure 9**

Passenger Side Shown

1. Passenger handhold

# Specifications

**Note:** Specifications and design are subject to change without notice.

| | |
|---|---|
| Base weight | 397 kg (875 lb) |
| Rated capacity (on level ground) | 544 kg (1,200 lb) total, including 90.7 kg (200 lb) operator and 91 kg (200 lb) passengers, load, accessories, and attachments |
| Gross vehicle weight (GVW)—on level ground | 941 kg (2,075 lb) total, including all of the weights listed above |
| Maximum cargo capacity (on level ground) | 363 kg (800 lb) total, including rear-mounted accessories |
| Maximum rear cargo-bed-accessory mount capacity | 45 kg (100 lb) total |
| Tow capacity | Tongue weight: 91 kg (200 lb)<br>Gross trailer weight (GTW): 680 kg (1,500 lb) |
| Overall width | 119 cm (47 inches) |
| Overall length | 302 cm (119 inches) |
| Overall height | 127.5 cm (50-3/16 inches) |
| Ground clearance | 21.6 cm (8-1/2 inches) at the front with no load or operator<br>14 cm (5-1/2 inches) at the rear with no load or operator |
| Wheel base | 220 cm (86-5/8 inches) |
| Wheel tread (center line to center line) | Front: 119 cm (47 inches)<br>Rear: 119 cm (47 inches) |
| Cargo bed length | Inside: 102 cm (40 inches)<br>Outside: 114.3 cm (45 inches) |
| Cargo bed width | Inside: 98 cm (38-1/2 inches)<br>Outside of the molded fenders: 107.3 cm (42-1/4 inches) |
| Cargo bed height | 28 cm (11 inches) inside |
| Engine speed | Low idle: 1,250 to 1,350 rpm<br>High idle: 3,650 to 3,750 rpm |

## Attachments/Accessories

A selection of Toro approved attachments and accessories is available for use with the machine to enhance and expand its capabilities. Contact your Authorized Service Dealer or authorized Toro distributor or go to www.Toro.com for a list of all approved attachments and accessories.

To ensure optimum performance and continued safety certification of the machine, use only genuine Toro replacement parts and accessories. Replacement parts and accessories made by other manufacturers could be dangerous, and such use could void the product warranty.

# Operation

**Note:** The procedures in this section show a machine with a plastic cargo bed and bucket seat; for additional procedures for other attachments, refer to the Operation section (if applicable) in the *Installation Instructions*. Visit www.Toro.com for your instructions or scan the QR code (if applicable) on your attachment.

**Note:** Determine the left and right sides of the machine from the normal operating position.

# *Before Operation*

## Before Operation Safety

### General Safety

- Never allow children or people who are not trained or physically capable to safely operate or service the machine. Local regulations may restrict the age of the operator. The owner is responsible for training all operators and mechanics.
- Become familiar with the safe operation of the equipment, operator controls, and safety signs.
- Shut off the machine, remove the key, and wait for all movement to stop before you leave the operator's position. Allow the machine to cool before adjusting, servicing, cleaning, or storing it.
- Know how to stop and shut off the machine quickly.
- Ensure that there are not more occupants (you and your passenger(s)) than the number of handholds equipped on the machine.
- Check that all safety devices and decals are in place. Repair or replace all safety devices and replace all illegible or missing decals. Do not operate the machine unless they are present and functioning properly.

### Fuel Safety

- Use extreme care in handling fuel. It is flammable and its vapors are explosive.
- Extinguish all cigarettes, cigars, pipes, and other sources of ignition.
- Use only an approved fuel container.
- Do not remove the fuel cap or fill the fuel tank while the engine is running or hot.
- Do not add or drain fuel in an enclosed space.
- Do not store the machine or fuel container where there is an open flame, spark, or pilot light, such as on a water heater or other appliance.
- If you spill fuel, do not attempt to start the engine; avoid creating any source of ignition until the fuel vapors have dissipated.

## Performing Daily Maintenance

**Service Interval:** Before each use or daily

Before starting the machine each day, perform the Each Use/Daily procedures listed in Maintenance (page 25).

## Checking the Tire Pressure

**Service Interval:** Before each use or daily

**Front and rear tires air pressure specification:** 165 to 207 kPa (24 to 30 psi)

***Important:*** **Do not exceed the maximum air pressure indicated on the sidewall of the tire.**

**Note:** The air pressure needed in the tires is determined by the payload that you intend to carry.

1. Check the air pressure in the tires.
   - Use lower air pressure in the tires for lighter payloads, for less soil compaction, for a smoother ride, and to minimize tire marks on the ground.
   - Use higher air pressure in the tires for carrying heavier payloads at higher speeds.
2. If necessary, adjust the air pressure in the tires by adding or removing air in the tires.

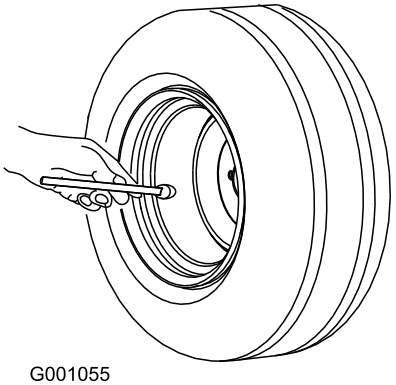


**Figure 10**

# Adding Fuel

## Recommended Fuel

| | |
|---|---|
| Type | Unleaded gasoline |
| Minimum octane rating | 87 (US) or 91 (research octane; outside the US) |
| Ethanol | No more than 10% by volume |
| Methanol | None |
| MTBE (methyl tertiary butyl ether) | Less than 15% by volume |
| Oil | Do not add to the fuel |

Use only clean, fresh (no more than 30 days old), fuel from a reputable source.

***Important:*** **To reduce starting problems, add fuel stabilizer/conditioner to fresh fuel as directed by the fuel-stabilizer/conditioner manufacturer.**

Refer to your engine owner's manual for additional information.

## Filling the Fuel Tank

The fuel-tank capacity is approximately 18.9 L (5 US gallons).

1. Park the machine on a level surface.
2. Shift the transmission to the NEUTRAL position.
3. Engage the parking brake.
4. Shut off the machine and remove the key.
5. Clean the area around the fuel-tank cap (Figure 11).

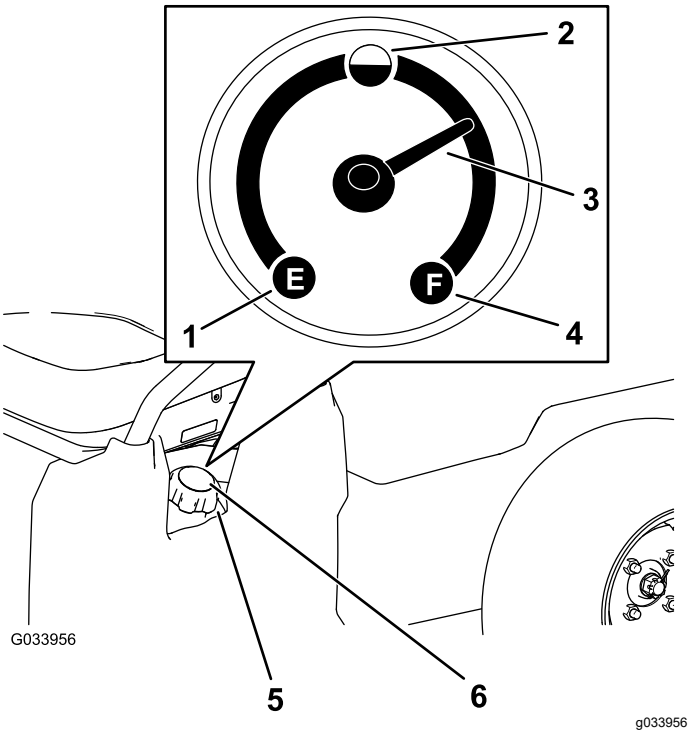


**Figure 11**

1. Empty
2. Half full
3. Needle
4. Full
5. Fuel-tank cap
6. Fuel gauge

6. Remove the fuel-tank cap.
7. Fill the tank to about 25 mm (1 inch) below the top of tank (bottom of the filler neck).

   **Note:** This space in the tank allows fuel to expand. **Do not overfill the fuel tank.**
8. Install the fuel-tank cap securely.
9. Wipe up any spilled fuel.

# Breaking in a New Machine

**Service Interval:** After the first 100 hours—Perform the guidelines for breaking in a new machine.

Perform the following guidelines to provide proper performance for the machine.

- Ensure that the brakes are burnished; refer to 3 Burnishing the Brakes (page 10).
- Check the fluid and engine-oil levels regularly. Remain alert for signs that the machine or its components are overheating.
- After starting a cold engine, let it warm up for about 15 seconds before using the machine.

  **Note:** Allow more time for the engine to warm up when operating in cold temperatures.
- Vary the machine speed during operation. Avoid fast starts and quick stops.

- A break-in oil for the engine is not required. Original engine oil is the same type specified for regular oil changes.
- Refer to Maintenance (page 25) for any special, low-hour checks.
- Check the front suspension positioning and adjust it, if necessary; refer to Adjusting the Front Wheel Alignment (page 46).

# *During Operation*

# During Operation Safety

## General Safety

- The owner/operator can prevent and is responsible for accidents that may cause personal injury or property damage.
- Passengers should sit in the designated seating positions only. Do not carry passengers in the cargo bed. Keep bystanders and children out of the operating area.
- Wear appropriate clothing, including eye protection; long pants; substantial, slip-resistant footwear; and hearing protection. Tie back long hair and do not wear loose clothing or loose jewelry.
- Use your full attention while operating the machine. Do not engage in any activity that causes distractions; otherwise, injury or property damage may occur.
- Do not operate the machine while ill, tired, or under the influence of alcohol or drugs.
- Operate the machine outdoors or in a well-ventilated area only.
- Do not exceed the maximum gross vehicle weight (GVW) of the machine.
- Use extra caution when operating, braking, or turning the machine with a heavy load in the cargo bed.
- Carrying oversized loads in the cargo bed reduces the stability of the machine. Do not exceed the carrying capacity of the bed.
- Carrying material that cannot be bound to the machine adversely affects the steering, braking, and stability of the machine. When you carry material that cannot be bound to the machine, use caution when steering or braking.
- Carry a reduced load and reduce the ground speed of the machine when operating on rough, uneven terrain, and near curbs, holes, and other sudden changes in terrain. Loads may shift, causing the machine to become unstable.
- Before you start the machine, ensure that the transmission is in neutral, the parking brake is engaged, and you are in the operating position.
- You and your passengers should remain seated whenever the machine is moving. Keep your hands on the steering wheel; your passengers should use the handholds provided. Keep arms and legs within the machine body at all times.
- Operate the machine only in good visibility. Watch for holes, ruts, bumps, rocks, or other hidden objects. Uneven terrain could overturn the machine. Tall grass can hide obstacles. Use care when approaching blind corners, shrubs, trees, or other objects that may obscure your vision.
- Do not drive the machine near drop-offs, ditches, or embankments. The machine could suddenly roll over if a wheel goes over the edge or if the edge gives way.
- Always watch out for and avoid low overhangs such as tree limbs, door jambs, overhead walkways, etc.
- Look behind and down before reversing the machine to be sure of a clear path.
- When using the machine on public roads, follow all traffic regulations and use any additional accessories that may be required by law, such as lights, turn signals, slow-moving vehicle (SMV) signs, and others as required.
- If the machine ever vibrates abnormally, stop and shut off the machine immediately, wait for all movement to stop, and inspect for damage. Repair all damage to the machine before resuming operation.
- It can take longer to stop the machine on wet surfaces than on dry surfaces. To dry out wet brakes, drive slowly on a level surface while putting light pressure on the brake pedal.
- Operating the machine at high speed and then quickly stopping may cause the rear wheels to lock up, which impairs your control of the machine.
- Do not touch the engine, transmission, muffler, or muffler manifold while the engine is running, or soon after you shut off the engine, because these areas may be hot enough to cause burns.
- Do not leave a running machine unattended.
- Before you leave the operating position, do the following:
  - Park the machine on a level surface.
  - Shift the transmission to the NEUTRAL position.
  - Engage the parking brake.
  - Shut off the machine and remove the key.
  - Wait for all movement to stop.

- Do not operate the machine when there is the risk of lightning.
- Use accessories and attachments approved by The Toro® Company only.

## Multi-Passenger Safety

- Do not exceed the gross vehicle weight (GVW) of the machine. You must account for yourself, your passengers, and the load in the cargo bed contributing to the overall GVW of the machine.
- Passengers should sit in the designated seating positions only. Do not allow passengers to sit in the cargo bed.
- You and your passengers should remain seated whenever the machine is in motion.
- The additional machine length results in a larger turn radius, so allow more space to maneuver the machine.

## Slope Safety

Slopes are a major factor related to loss-of-control and tip-over accidents, which can result in severe injury or death.

- Survey the site to determine which slopes are safe for operating the machine and establish your own procedures and rules for operating on those slopes. Always use common sense and good judgment when performing this survey.
- If you feel uneasy operating the machine on a slope, do not do it.
- Keep all movement on slopes slow and gradual. Do not suddenly change the speed or direction of the machine.
- Avoid operating the machine on wet terrain. Tires may lose traction. A rollover can occur before the tires lose traction.
- Travel straight up and down a slope.
- If you begin to lose momentum while climbing a slope, gradually engage the brakes and slowly reverse the machine straight down the slope.
- Turning while going up or down a slope can be dangerous. If you must turn on a slope, do it slowly and cautiously.
- Heavy loads affect stability on a slope. Carry a reduced load and reduce your ground speed when operating on a slope or if the load has a high center of gravity. Secure the load to the cargo bed of the machine to prevent the load from shifting. Take extra care when hauling loads that shift easily (e.g., liquids, rock, sand, etc.).
- Avoid starting, stopping, or turning the machine on a slope, especially with a load. Stopping while going down a slope takes longer than stopping on level ground. If you must stop the machine, avoid sudden speed changes, which can cause the machine to tip or roll over. Do not engage the brakes suddenly when rolling rearward, as this may cause the machine to overturn.

## Loading and Dumping Safety

- Do not exceed the gross vehicle weight (GVW) of the machine when operating it with a load in the cargo bed and/or towing a trailer; refer to Specifications (page 14).
- Distribute the load in the cargo bed evenly to improve the stability and control of the machine.
- Before dumping, ensure that there is no one behind the machine.
- Do not dump a loaded cargo bed while the machine is sideways on a slope. The change in weight distribution may cause the machine to overturn.

# Operating the Cargo Bed

## Raising the Cargo Bed to the Dump Position

**⚠ WARNING**

**A raised bed could fall and injure persons that are working beneath it.**

- **Always use the prop rod to hold the bed up before working under the bed.**
- **Remove any load material from the bed before raising it.**

**⚠ WARNING**

**Driving the machine with the cargo bed raised could cause the machine to tip or roll easier. You could damage the structure of the cargo bed if you operate the machine with the bed raised.**

- **Operate the machine when the cargo bed is down.**
- **After emptying the cargo bed, lower it.**

**⚠ CAUTION**

**If a load is concentrated near the back of the cargo bed when you release the latches, the bed may unexpectedly tip open, injuring you or bystanders.**

- **Center loads in the cargo bed, if possible.**
- **Hold the cargo bed down and ensure that no one is leaning over the bed or standing behind it when releasing the latches.**
- **Remove all cargo from the bed before lifting the bed up to service the machine.**

1. Pull the lever on left, inside of the cargo bed toward you and lift the cargo bed up (Figure 12).

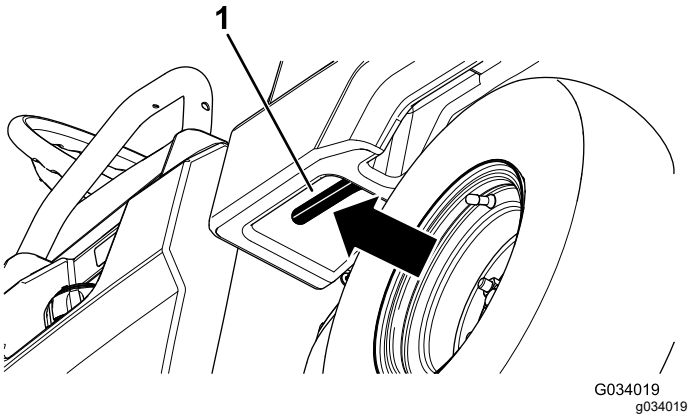


**Figure 12**

1. Cargo-bed lever

2. Pull the prop rod into the dump position detent slot to secure the bed for dumping (Figure 13).

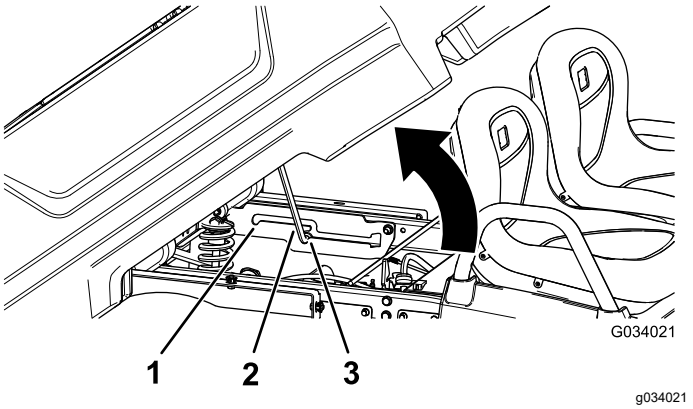


**Figure 13**

1. Service position detent slot
2. Prop rod
3. Dump position detent slot

## Raising the Cargo Bed to the Service Position

1. Pull the lever on left, inside of the cargo bed toward you and lift the cargo bed up (Figure 12).
2. Pull prop rod into the service position detent slot to secure the bed for maintenance (Figure 13).

## Lowering the Cargo Bed

**⚠ WARNING**

**The weight of the bed may be heavy. Hands or other body parts could be crushed.**

**Keep your hands and other body parts away when lowering the bed.**

1. Raise the cargo bed slightly by lifting up on the latch lever (Figure 12).
2. Pull the prop rod out of the detent slot (Figure 13).
3. Lower the bed until it latches securely.

## Opening the Tailgate

1. Ensure that the cargo bed is down and latched.
2. Using both hands, raise the tailgate using the ridge near the top of the tailgate (Figure 14).
3. Lower the tailgate until it is flush with the bottom of the cargo bed (Figure 14).

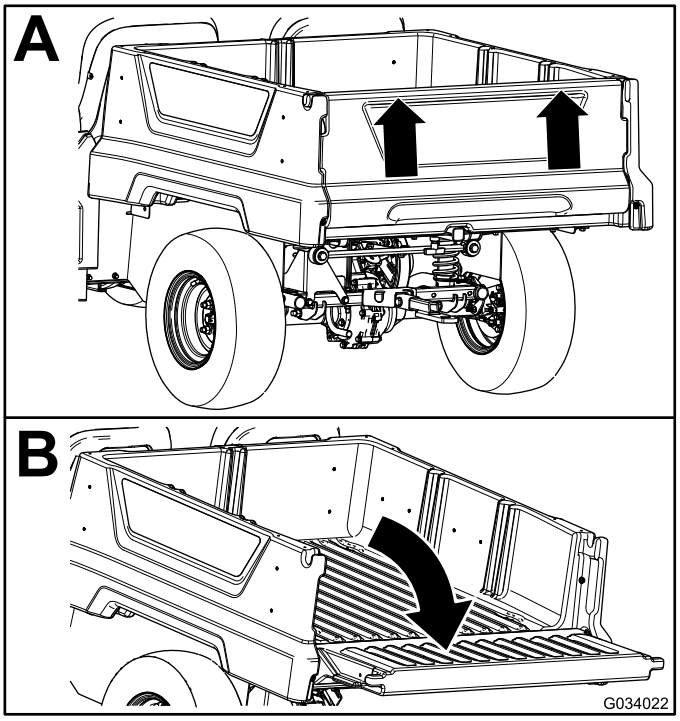


g034022

**Figure 14**

## Closing the Tailgate

If you unloaded loose material such as sand, landscaping rock, or wood chips from the cargo bed of the machine, some of the material that you unloaded may have lodged in the hinge area of the tailgate. Perform the following steps before closing the tailgate.

1. Use your hands to remove as much of the material from the hinge area as possible.
2. Rotate the tailgate to approximately the 45° position (Figure 15).

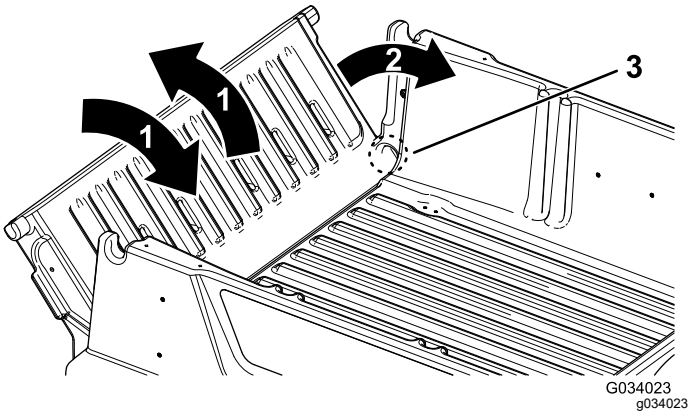


**Figure 15**

1. Rotate the tailgate back and forth several times.
2. Rotate the tailgate to approximately the 45° position.
3. Hinge area

3. Use a short, shaking motion to rotate the tailgate back and forth several times (Figure 15).

   **Note:** This action helps move material away from the hinge area.
4. Lower the tailgate and check for material remaining in the hinge area.
5. Repeat steps 1 through 4 until the material is removed from the hinge area.
6. Rotate the tailgate up and lift the tailgate into the notches in the cargo bed.

# Using the Rear Cargo Bed Accessory Mount

Use the rear cargo bed accessory mount to attach accessories to the rear of the machine.

**Capacity:** 45 kg (100 lb)

1. Loosen the “T” handle by rotating it clockwise (Figure 16).

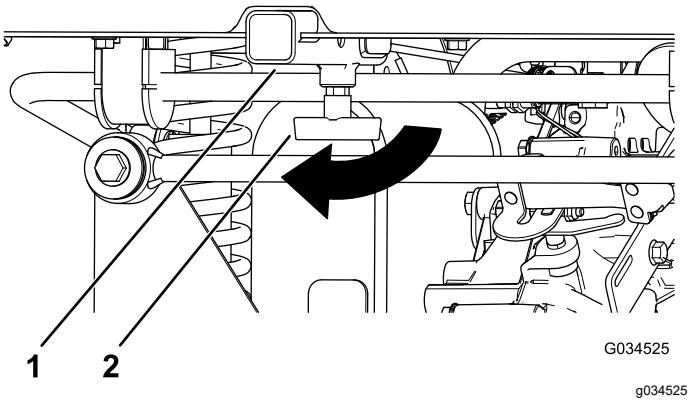


**Figure 16**

1. Receiver
2. “T” handle

2. Insert your accessory into the receiver until the holes align (Figure 16).
3. Secure the assembled accessory to the receiver tube using the clevis pin and hairpin cotter supplied with the accessory.
4. Tighten the “T” handle by rotating it counterclockwise (Figure 17).

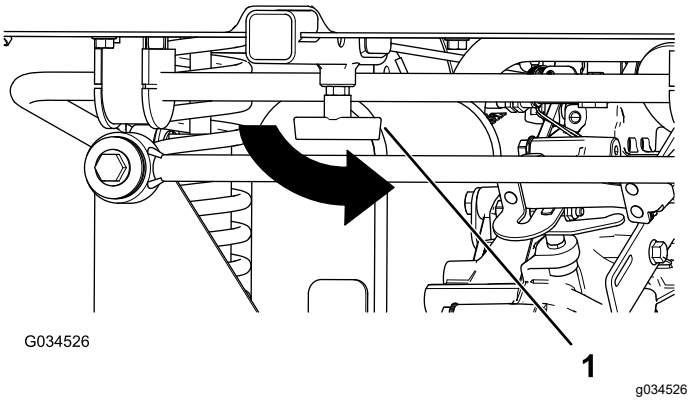


**Figure 17**

1. “T” handle

# Loading the Cargo Bed

Use the following guidelines when loading the cargo bed and operating the machine:

- Observe the weight capacity of the machine and limit the weight of the load that you carry in the cargo bed as described in Specifications (page 14) and on the gross vehicle weight tag of the machine.

  **Note:** The load rating is specified for machine operation on a level surface only.

- Reduce the weight of the load that you carry in the cargo bed when operating the machine on hills and rough terrain.
- Reduce the weight of the load that you carry when the materials are tall (and have a high center of gravity), such as a stack of bricks, landscaping timbers, or fertilizer bags. Distribute the load as low as possible to ensure that the load does not reduce your ability to see behind the machine when operating it.
- Keep loads centered by loading the cargo bed as follows:
  - Evenly position the weight in the cargo bed from side to side.

    ***Important:*** **Tipping over is more likely to occur if the cargo bed is loaded to 1 side.**

  - Evenly position the weight in the cargo bed from front to back.

    ***Important:*** **Loss of steering control or the machine may tip over if you position the load behind the rear axle and the traction on the front tires is reduced.**

- Use extra caution when transporting oversized loads in the cargo bed, particularly when you cannot center the weight of the oversize load to the cargo bed.
- Whenever possible, secure the load by binding it to the cargo bed so that it does not shift.
- When transporting liquids, use caution when driving the machine uphill or downhill, when suddenly changing speed or stopping, or when driving over rough surfaces.

The capacity of the cargo bed is 0.28 $m^3$ (10 $ft^3$). The amount (volume) of material that you can place in the bed without exceeding the load ratings of the machine can vary greatly depending on the density of the material.

Refer to the following table for load volume limits with various materials:

| Material | Density | Maximum Cargo Bed Capacity (on level ground) |
|---|---|---|
| Gravel, dry | 1522 kg/$m^3$ (95 lb/$ft^3$) | Full |
| Gravel, wet | 1922 kg/$m^3$ (120 lb/$ft^3$) | 3/4 Full |
| Sand, dry | 1442 kg/$m^3$ (90 lb/$ft^3$) | Full |
| Sand, wet | 1922 kg/$m^3$ (120 lb/$ft^3$) | 3/4 Full |
| Wood | 721 kg/$m^3$ (45 lb/$ft^3$) | Full |
| Bark | <721 kg/$m^3$ (<45 lb/$ft^3$) | Full |
| Earth, packed | 1602 kg/$m^3$ (100 lb/$ft^3$) | 3/4 Full (approximately) |

# Starting the Engine

1. Sit in the operator seat, insert the key into the key switch, and rotate the key clockwise to the ON or START position.

   There are 2 modes of starting the machine:

   - **Pedal Start**—turn the key switch to the ON position and press down the accelerator pedal.

     **Note:** When you remove your foot from the accelerator pedal, the engine shuts off.

   - **Key Start**—turn the key switch to the START position and the engine remains on until the is turned to the OFF position.

   **Note:** When using key start mode, you can engage the parking brake and work away from the machine while the engine still runs and the battery holds a charge.

   **Note:** If you turn the key to the START position, the engine cranks until it starts. If the engine cranks for more than 10 seconds, return to the OFF position, and determine the issue (e.g., the choke controls needs to be engaged, check the air cleaner for restrictions, ensure that the fuel tank is full, the spark is bad, etc.) before starting the machine again.

   **Note:** When equipped with the optional backup alarm, if you move the gear-shift selector to the REVERSE position when the key switch is in the ON or START position, a buzzer sounds to warn the operator that the machine is in reverse gear.

2. Move the gear-shift selector to the desired direction of travel for the machine.
3. Disengage the parking brake.
4. Slowly step on the accelerator pedal.

**Note:** If the engine is cold, press and hold the accelerator pedal about half-way down, and pull the choke knob out to the ON position. Return the choke knob to the OFF position after the engine warms up.

## Stopping the Machine

***Important:*** **When stopping the machine on an incline, use the service brakes to stop the machine and engage the parking brake to hold the machine in place. Using the accelerator to stall the machine on the hill can damage the machine.**

1. Remove your foot from the accelerator pedal.
2. Slowly press the brake pedal to apply the service brakes until the machine comes to a complete stop.

   **Note:** The stopping distance may vary depending on the machine load and speed.

## Parking the Machine

1. Stop the machine using the service brakes by pressing and holding the brake pedal.
2. Engage the parking brake by pulling the parking-brake lever toward you.
3. Rotate the key counterclockwise to the OFF position.
4. Remove the key.

# *After Operation*

## After Operation Safety

### General Safety

- Before you leave the operating position, do the following:
  - Park the machine on a level surface.
  - Shift the transmission to the NEUTRAL position.
  - Engage the parking brake.
  - Shut off the machine and remove the key.
  - Wait for all movement to stop.
- Allow the machine to cool before adjusting, servicing, cleaning, or storing it.
- Do not store the machine where there is an open flame, spark, or pilot light, such as on a water heater or other appliance.
- Keep all parts of the machine in good working condition and all hardware tightened.
- Maintain and clean the seat belt(s) as necessary.
- Replace all worn, damaged, or missing decals.

## Hauling the Machine

- Use care when loading or unloading the machine into a trailer or a truck.
- Use full-width ramps for loading the machine into a trailer or a truck.
- Tie the machine down securely.

Refer to Figure 18 and Figure 19 for the tie-down locations on the machine.

**Note:** Load the machine on the trailer with the front of the machine facing forward. If that is not possible, secure the machine hood to the frame with a strap, or remove the hood and transport and secure it separately or the hood may blow off during transport.

**⚠ CAUTION**

**Loose seats may fall off the machine and trailer when transporting the machine, and the seats may land on another machine or obstruct the roadway.**

**Remove the seats or ensure that the seats are secured by the pivot pins.**

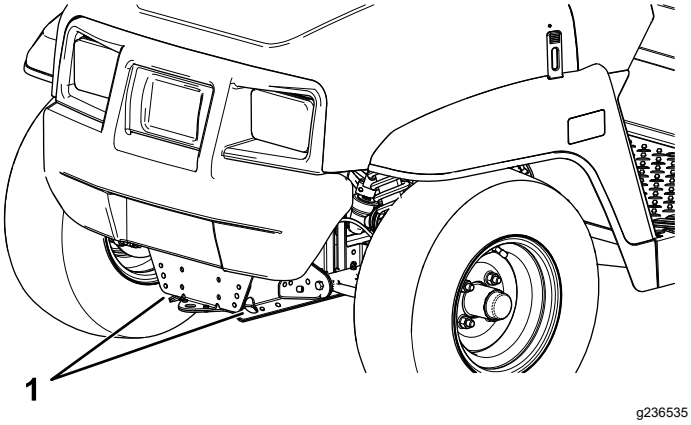


**Figure 18**

1. Towing tongue and tie-down point (front of the machine)

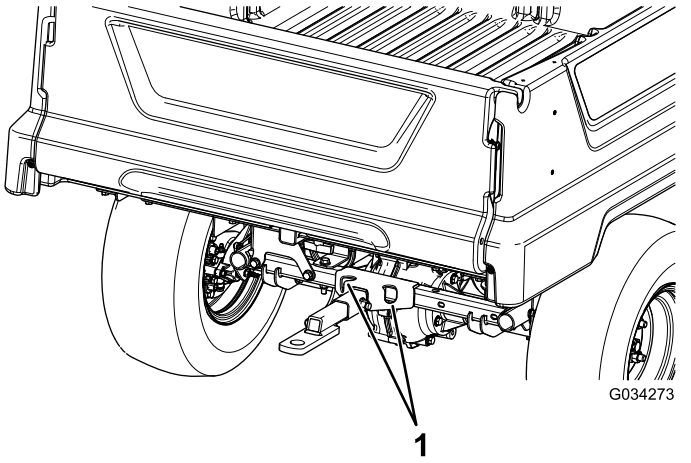


**Figure 19**

1. Rear tie-down points

# Towing the Machine

In case of an emergency, you can tow the machine for a short distance; however, this should not be a standard operating procedure.

**⚠ WARNING**

**Towing at excessive speeds could cause a loss of steering control, resulting in personal injury.**

**Never tow the machine at faster than 8 km/h (5 mph).**

Towing the machine is a 2-person job. If you must move the machine a considerable distance, transport it on a truck or trailer; refer to Towing a Trailer (page 24)

1. Remove the drive belt from the machine; refer to Replacing the Drive Belt (page 53).
2. Affix a tow line to the tongue at the front of the machine frame (Figure 18).
3. Move the transmission to the NEUTRAL position and disengage the parking brake.

# Towing a Trailer

The machine is capable of pulling trailers. A tow hitch is available for the machine. Contact your authorized Toro distributor for details.

When hauling cargo or towing a trailer, do not overload your machine or trailer. Overloading either the machine or the trailer can cause poor performance or damage to the brakes, axle, engine, transaxle, steering, suspension, body structure, or tires.

Always load a trailer with 60% of the cargo weight in the front of the trailer. This places approximately 10% of the gross trailer weight (GTW) on the tow hitch of the machine.

To provide adequate braking and traction, always load the cargo bed when using a trailer. Do not exceed the GTW or GVW limits.

Avoid parking a machine with a trailer on a hill. If you must park on a hill, engage the parking brake, and chock the tires of the trailer.

# Maintenance

**Note:** The procedures in this section show a machine with a plastic cargo bed and bucket seat; for additional procedures for other attachments, refer to the Maintenance section (if applicable) in the *Installation Instructions*. Visit www.Toro.com for your instructions or scan the QR code (if applicable) on your attachment.

## Maintenance Safety

- Do not allow untrained personnel to service the machine.
- Before you leave the operating position, do the following:
  - Park the machine on a level surface.
  - Shift the transmission to the NEUTRAL position.
  - Engage the parking brake.
  - Lower the cargo bed.
  - Shut off the machine and remove the key.
  - Wait for all movement to stop.
- Allow the machine to cool before adjusting, servicing, cleaning, or storing it.
- Support the machine with jack stands whenever you work under the machine.
- Do not work under a raised bed without the proper bed safety support in place.
- Do not charge the batteries while servicing the machine.
- To ensure that the entire machine is in good condition, keep all hardware properly tightened.
- To reduce the potential fire hazard, keep the machine area free of excessive grease, grass, leaves, and accumulation of dirt.
- If possible, do not perform maintenance while the machine is running. Keep away from moving parts.
- If you must run the machine to perform a maintenance adjustment, keep your hands, feet, clothing, and any parts of the body away from any moving parts. Keep bystanders away from the machine.
- Clean up oil and fuel spills.
- Check the parking brake operation as recommended in the maintenance schedule and adjust and service it as required.
- Keep all parts of the machine in good working condition and all the hardware properly tightened. Replace all worn or damaged decals.
- Never interfere with the intended function of a safety device or reduce the protection provided by a safety device.
- Do not overspeed the engine by changing the governor settings. To ensure safety and accuracy, have an Authorized Service Dealer check the maximum engine speed with a tachometer.
- If major repairs are ever necessary or assistance is required, contact an authorized Toro distributor.
- Altering this machine in any manner may affect the operation of the machine, performance, durability, or its use may result in injury or death. Such use could void the product warranty of The Toro® Company.

# Recommended Maintenance Schedule(s)

| Maintenance Service Interval | Maintenance Procedure |
|---|---|
| After the first 5 hours | • Change the engine oil. |
| After the first 8 hours | • Check the condition of the drive belt.<br>• Check the tension of the starter-generator belt. |
| After the first 50 hours | • Check the air filter for the carbon canister. |
| After the first 100 hours | • Perform the guidelines for breaking in a new machine. |
| Before each use or daily | • Inspect the seat belt(s) for wear, cuts, and other damage. Replace the seat belt(s) if any component does not operate properly.<br>• Check the tire pressure.<br>• Check the engine-oil level.<br>• Check gear-shift operation.<br>• Check the brake-fluid level.<br>• Wash the machine. |
| Every 50 hours | • Remove the air-cleaner cover and clean out the debris. Do not remove the air-cleaner element.<br>• Clean out the debris in the dust cap.<br>• Under special operating conditions (refer to Maintaining the Machine under Special Operating Conditions)—replace the air-cleaner element. Replace the air-cleaner element sooner if dirty or damaged.<br>• Under special operating conditions (refer to Maintaining the Machine under Special Operating Conditions)—change the engine oil. |
| Every 100 hours | • Under normal operating conditions—replace the air-cleaner element. Replace the air-cleaner element sooner if dirty or damaged.<br>• Under normal operating conditions—change the engine oil.<br>• Check the spark plug.<br>• Check the condition of the tires and rims.<br>• Torque the wheel-lug nuts.<br>• Inspect the steering and suspension for loose or damaged components.<br>• Check the front wheel camber and toe-in.<br>• Check the transaxle-fluid level.<br>• Check the operation of the neutral gear-shift position.<br>• Clean the engine-cooling areas.<br>• Inspect the brakes. |
| Every 200 hours | • Check the air filter for the carbon canister.<br>• Check the condition and tension of the drive belt.<br>• Check the tension of the starter-generator belt. |
| Every 300 hours | • Grease the front wheel bearings. |
| Every 400 hours | • Inspect the fuel lines and connections.<br>• Replace the fuel filter.<br>• Clean the primary drive clutch.<br>• Replace the service and parking-brake pads. |
| Every 800 hours | • Change the transaxle fluid. |
| Every 1,000 hours | • Change the brake fluid. |
| Yearly | • Complete all of the yearly maintenance procedures that are specified in the engine owner's manual. |

**Note:** Download a free copy of the electrical schematic by visiting www.Toro.com and searching for your machine from the Manuals link on the home page.

***Important:*** **Refer to your engine owner's manual for additional maintenance procedures.**

**⚠ WARNING**

**Failing to properly maintain the machine could result in premature failure of machine systems, causing possible harm to you or bystanders.**

**Keep the machine well maintained and in good working order as indicated in these instructions.**

**⚠ CAUTION**

**Only qualified and authorized personnel should maintain, repair, adjust, or inspect the machine.**

- **Avoid fire hazards and have fire-protection equipment present in the work area. Do not use an open flame to check fluid levels or leakage of fuel, battery electrolyte, or coolant.**
- **Do not use open pans of fuel or flammable cleaning fluids for cleaning parts.**

**⚠ CAUTION**

**If you leave the key in the switch, someone could accidently start the engine and seriously injure you or other bystanders.**

**Shut off the engine and remove the key from the switch before you perform any maintenance.**

# Daily Maintenance Checklist

Duplicate this page for routine use.

| Maintenance Check Item | For the week of: | | | | | | |
|---|---|---|---|---|---|---|---|
| | Monday | Tuesday | Wednesday | Thursday | Friday | Saturday | Sunday |
| Check the brake and parking brake operation. | | | | | | | |
| Check the gear shift/neutral operation. | | | | | | | |
| Check the fuel level. | | | | | | | |
| Check the engine-oil level. | | | | | | | |
| Check the brake-fluid level. | | | | | | | |
| Check the transaxle-fluid level. | | | | | | | |
| Inspect the air filter. | | | | | | | |
| Inspect the engine-cooling fins. | | | | | | | |
| Check for unusual engine noises. | | | | | | | |
| Check for unusual operating noises. | | | | | | | |
| Check the tire pressure. | | | | | | | |
| Check for fluid leaks. | | | | | | | |
| Check the instrument operation. | | | | | | | |
| Check the accelerator operation. | | | | | | | |
| Wash the machine. | | | | | | | |
| Touch up any damaged paint. | | | | | | | |

# Maintaining the Machine under Special Operating Conditions

***Important:*** **If the machine is subjected to any of the conditions listed below, perform maintenance twice as frequently:**

- Desert operation
- Cold climate operation—below 10°C (50°F)
- Trailer towing
- Frequent operation in dusty conditions
- Construction work
- After extended operation in mud, sand, water, or similar dirty conditions, do the following:
  - Have your brakes inspected and cleaned as soon as possible. This prevents any abrasive material from causing excessive wear.
  - Wash the machine using water alone or with a mild detergent.

    ***Important:*** **Do not use brackish or reclaimed water to clean the machine.**

# *Pre-Maintenance Procedures*

## Preparing the Machine for Maintenance

1. Park the machine on a level surface.
2. Shift the transmission to the NEUTRAL position.
3. Engage the parking brake.
4. Shut off the engine and remove the key.
5. Empty and raise the cargo bed.

## Lifting the Machine

**⚠ DANGER**

**The machine may be unstable when using a jack. The machine could slip off the jack, injuring anyone beneath it.**

- **Do not start the machine while the machine is on a jack.**
- **Always remove the key from the key switch before getting off the machine.**
- **Block the tires when the machine is supported by lifting equipment.**
- **Use jack stands to support the machine once you have lifted it.**

***Important:*** **Whenever you run the machine for routine maintenance and/or diagnostics, ensure that the rear wheels of the machine are 25 mm (1 inch) off the ground, with the rear axle supported on jack stands.**

- The lifting point at the front of the machine is located at the front of the frame, behind the towing tongue (Figure 20).

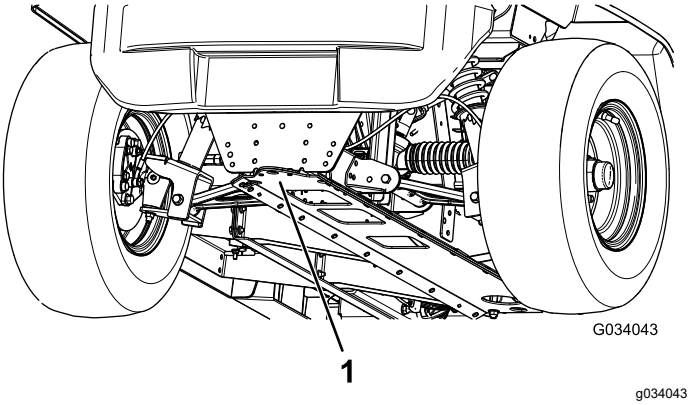


**Figure 20**

1. Front lifting point

- The lifting point at the rear of the machine is located under the axle tubes (Figure 21).

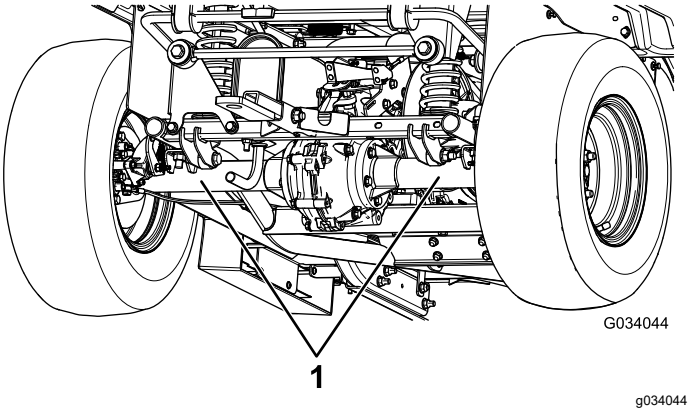


**Figure 21**

1. Rear lifting points

# Accessing the Hood

## Raising the Hood

1. Lift up the handle of the rubber latches on each side of the hood (Figure 22).

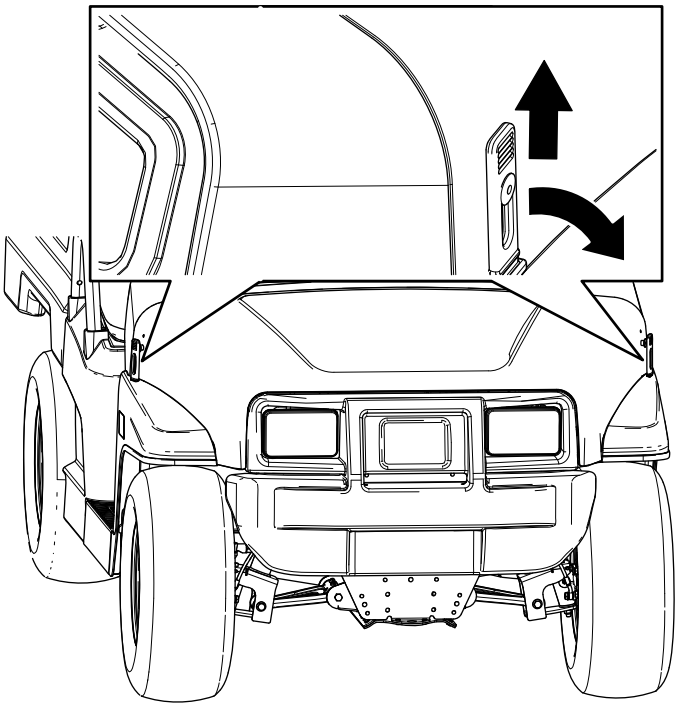


**Figure 22**

2. Raise the hood.

## Closing the Hood

1. Gently lower the hood.
2. Secure the hood by aligning the rubber latches onto the latch anchors on each side of the hood (Figure 22).

# Raising and Lowering the Seat Assembly

To raise the seat assembly, push the seat assembly forward until it rests on the steering wheel (Figure 23).

To lower the seat assembly, push the seat assembly rearward until it seats back into the original position (Figure 23).

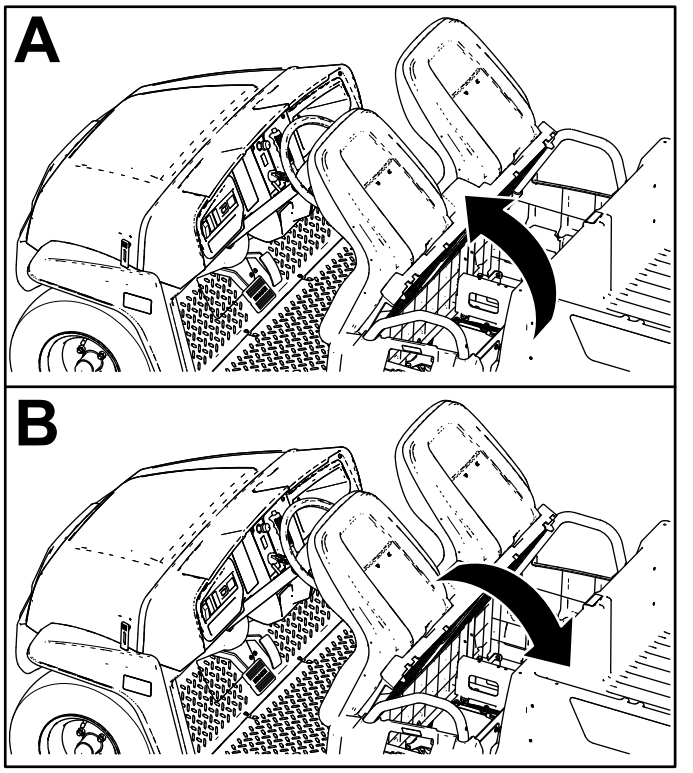


**Figure 23**

# Removing a Bucket Seat

1. Push the seat assembly forward to the raised position (Figure 23).
2. Slide the seat assembly to the side out of the pins, and lift the seat assembly upward (Figure 24).

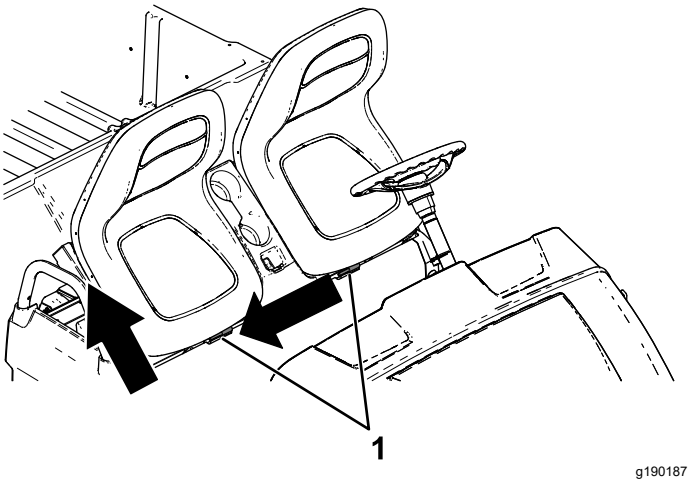


**Figure 24**

1. Pins

# Installing a Bucket Seat

Slide the seat assembly onto the pins and lower the seat assembly (Figure 25).

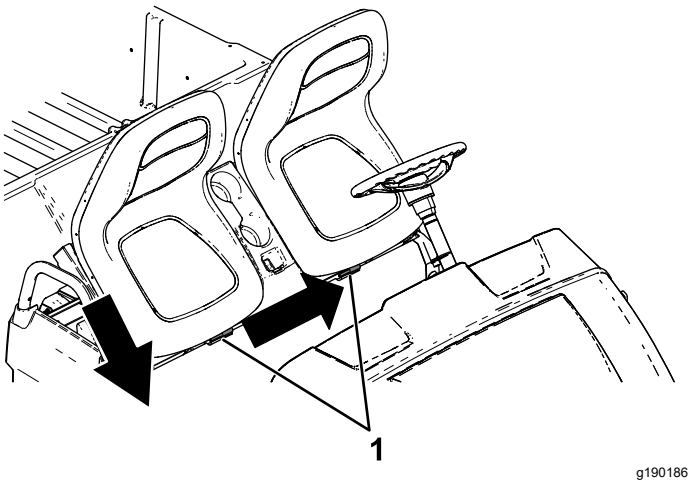


**Figure 25**

1. Pins

# Removing a Bench Cushion

1. Push the bench cushion forward to the raised position.
2. Slide the cushion to the side, out of the pins, and lift the cushion upward (Figure 26).

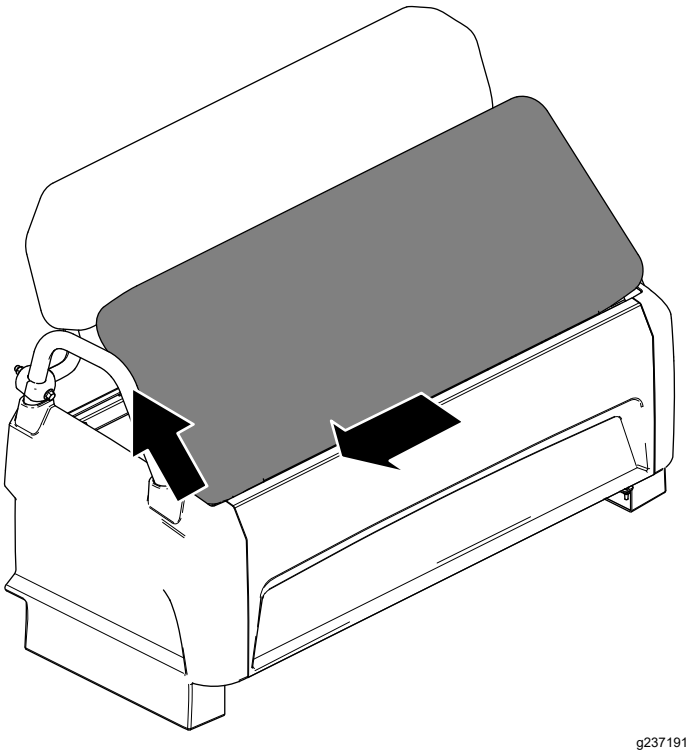


**Figure 26**

# Installing a Bench Cushion

Slide the bench cushion onto the pins and lower the cushion (Figure 27).

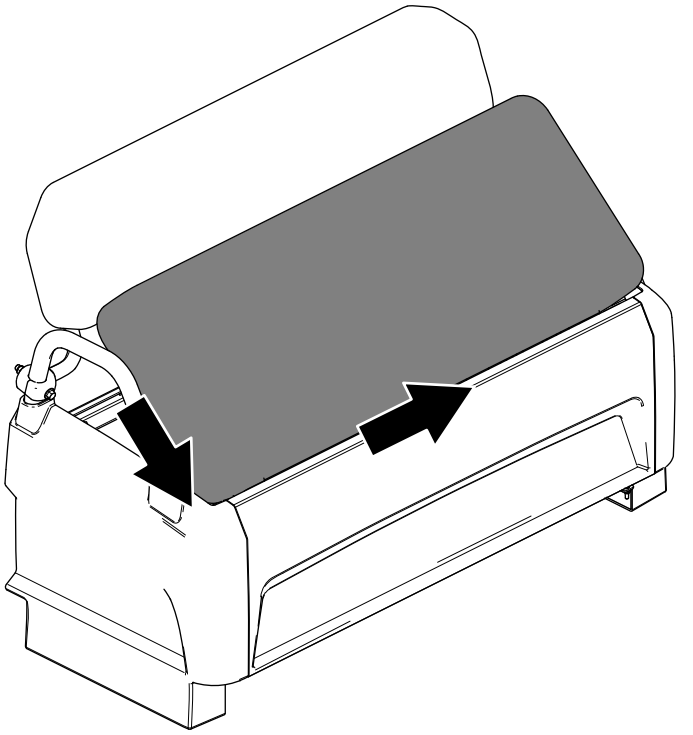


**Figure 27**

# Lubrication

## Greasing the Front Wheel Bearings

**Service Interval:** Every 300 hours

**Grease specification:** Mobilgrease XHP™-222

## Removing the Hub and Rotor

1. Lift the front of the machine and support it with jack stands.
2. Remove the 4 lug nuts that secure the wheel to the hub (Figure 28).

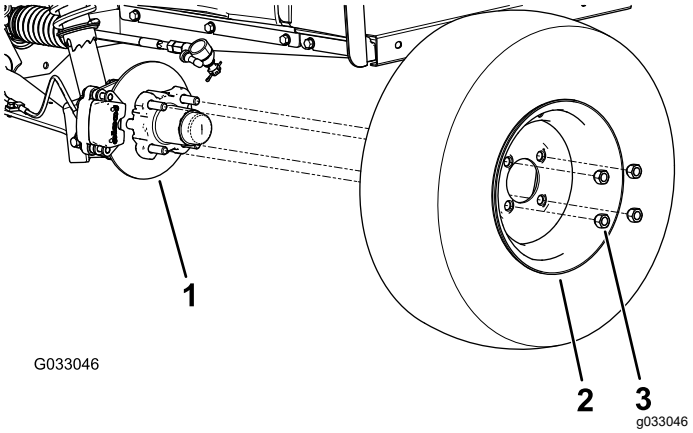


**Figure 28**

1. Hub
2. Wheel
3. Lug nut

3. Remove the flange-head bolts (3/8 x 3/4 inch) that secure the bracket for the brake assembly to the spindle and separate the brake from the spindle (Figure 29).

   **Note:** Support the brake assembly before proceeding to the next step.

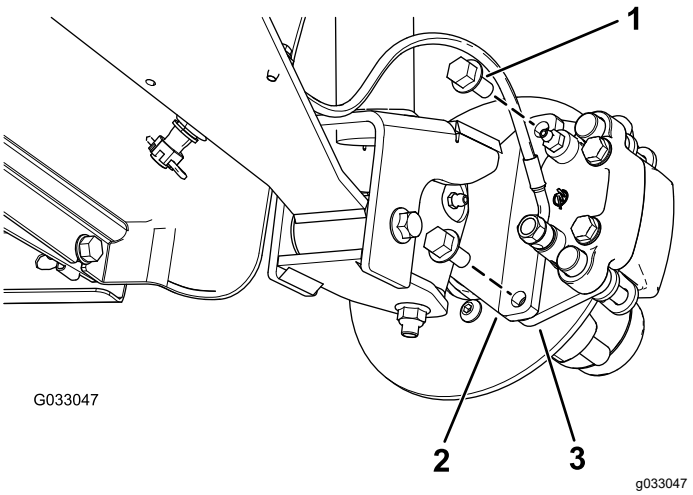


**Figure 29**

1. Flange-head bolts (3/8 x 3/4 inch)
2. Spindle
3. Caliper bracket (brake assembly)

4. Remove the dust cap from the hub (Figure 30).

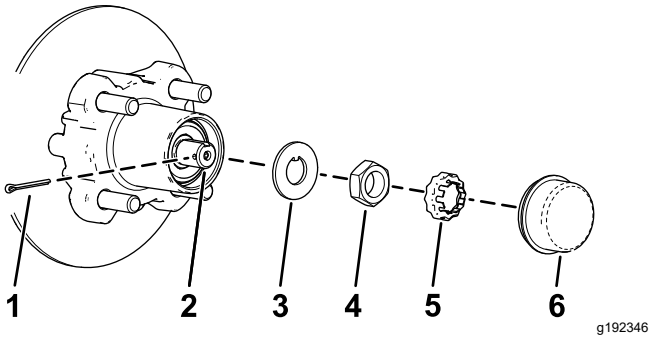


**Figure 30**

1. Cotter pin
2. Spindle
3. Tab washer
4. Spindle nut
5. Nut retainer
6. Dust cap

5. Remove the cotter pin and nut retainer from the spindle and spindle nut (Figure 30).
6. Remove the spindle nut from the spindle, and separate the hub and rotor assembly from the spindle (Figure 30 and Figure 31).

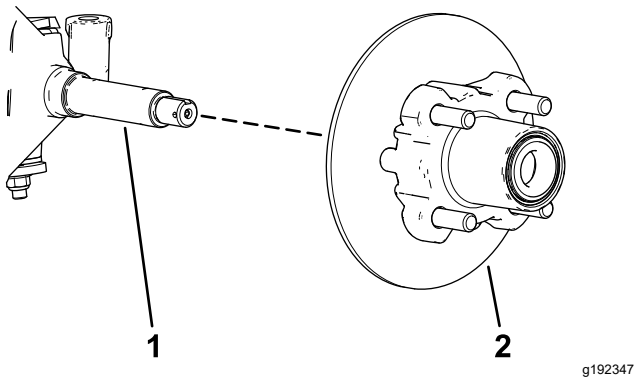


**Figure 31**

1. Spindle
2. Hub and rotor assembly

7. Wipe clean the spindle with a rag.
8. Repeat steps 1 through 7 to the hub and rotor at the other side of the machine.

# Greasing the Wheel Bearings

1. Remove the outboard bearing and bearing race from the hub (Figure 32).

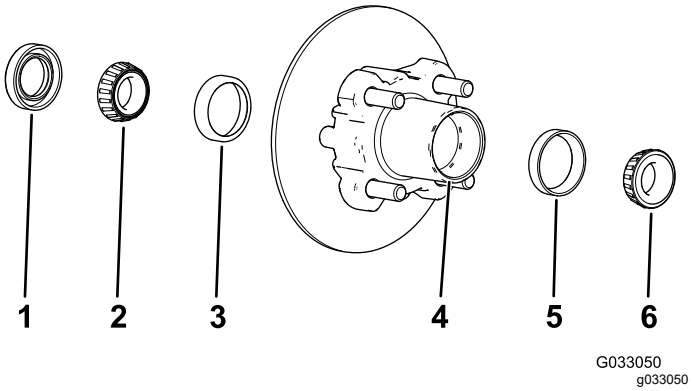


**Figure 32**

1. Seal
2. Inboard bearing
3. Inboard-bearing race
4. Bearing cavity (hub)
5. Outboard-bearing race
6. Outboard bearing

2. Remove the seal, inboard bearing from the hub (Figure 32).
3. Wipe clean the seal and check for wear and damage.

   **Note:** Do not use cleaning solvent to clean the seal. Replace the seal if it is worn or damaged.
4. Clean the bearings and races, and check these parts for wear and damage.

   **Note:** Replace all worn or damaged parts. Ensure that the bearings and races are clean and dry.
5. Clean the cavity of the hub of all grease, dirt, and debris (Figure 32).
6. Pack the bearings with the specified grease.
7. Fill the cavity of hub 50 to 80% full of the specified grease (Figure 32).
8. Assemble the inboard bearing onto the race at the inboard side of the hub and install the seal (Figure 32).
9. Repeat steps 1 through 8 to the bearings for the other hub.

# Installing the Hub and Rotor

1. Apply a light coat of the specified grease to the spindle (Figure 33).

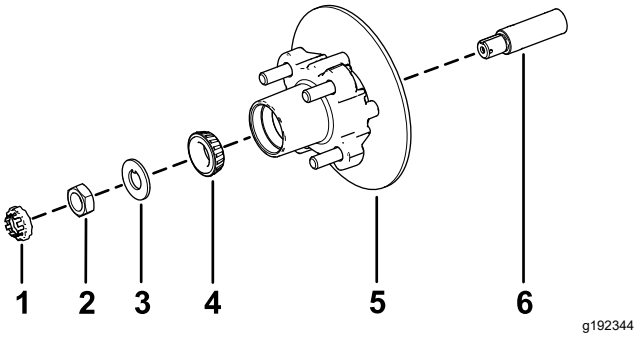


**Figure 33**

1. Nut retainer
2. Spindle nut
3. Tab washer
4. Outer bearing
5. Hub, rotor, inner bearing, race, and seal
6. Spindle

2. Assemble the hub and rotor onto the spindle with the rotor inboard (Figure 33).
3. Assemble the outboard bearing onto the spindle and seat the bearing to the outboard race (Figure 33).
4. Assemble the tab washer onto the spindle (Figure 33).
5. Thread the spindle nut onto the spindle and tighten the nut to 15 N·m (11 ft-lb), while rotating the hub to seat the bearing (Figure 33).
6. Loosen the spindle nut until the hub rotates freely.
7. Torque the spindle nut to 170 to 225 N·cm (15 to 20 in-lb).
8. Install the retainer over the nut and check the alignment of the slot in the retainer and the hole in the spindle for the cotter pin (Figure 34).

   **Note:** If the slot in the retainer and the hole in the spindle are not aligned, tighten the spindle nut to align the slot and hole to a maximum torque of 226 N·cm (20 in-lb) on the nut.

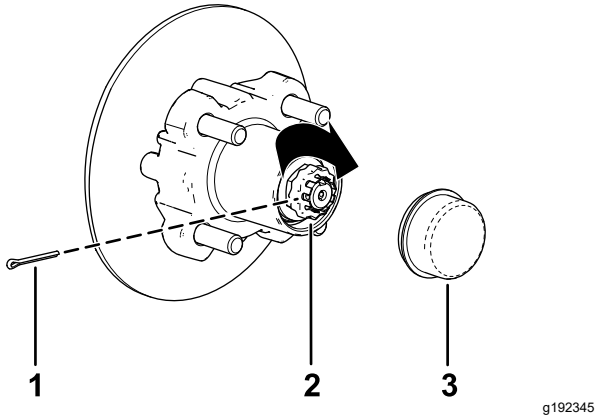


**Figure 34**

1. Cotter pin
2. Nut retainer
3. Dust cap

9. Install the cotter pin and bend each legs around the retainer (Figure 34).
10. Install the dust cap onto the hub (Figure 34).
11. Repeat steps 1 through 10 for the hub and rotor at the other side of the machine.

# Installing the Brakes and Wheels

1. Clean the 2 flange-head bolts (3/8 x 3/4 inch) and apply a coat of medium-strength thread-locking compound to the threads of the bolts.
2. Align the brake pads to either side of the rotor (Figure 29) and the holes in the caliper bracket with the holes in the brake mount of the spindle frame (Figure 33).
3. Secure the caliper bracket to the spindle frame (Figure 29) using the 2 flange-head bolts (3/8 x 3/4 inch).

   Torque the 2 flange-head bolts to 47 to 54 N·m (35 to 40 ft-lb).
4. Align the holes in the wheel to the studs of the hub and assemble the wheel to the hub with the valve stem outward (Figure 28).

   **Note:** Ensure that the mounting surface of the wheel is flush with the hub.
5. Secure the wheel to the hub using the lug nuts (Figure 28).

   Torque the lug nuts to 108 to 122 N·m (80 to 90 ft-lb).
6. Repeat steps 1 through 5 for the brake and wheel on the other side of the machine.

# *Engine Maintenance*

## Engine Safety

- Shut off the engine, remove the key, and wait for all moving parts to stop before checking the oil or adding oil to the crankcase.
- Keep your hands, feet, face, clothing, and other body parts away from the muffler and other hot surfaces.

## Servicing the Air Cleaner

### Servicing the Air-Cleaner Cover

**Service Interval:** Every 50 hours—Remove the air-cleaner cover and clean out the debris. Do not remove the air-cleaner element.

Every 50 hours—Clean out the debris in the dust cap.

Check the air-cleaner body for damage which could cause an air leak. Replace a damaged air-cleaner body.

Clean the air-cleaner cover and remove the debris from the dust cap as shown in Figure 35.

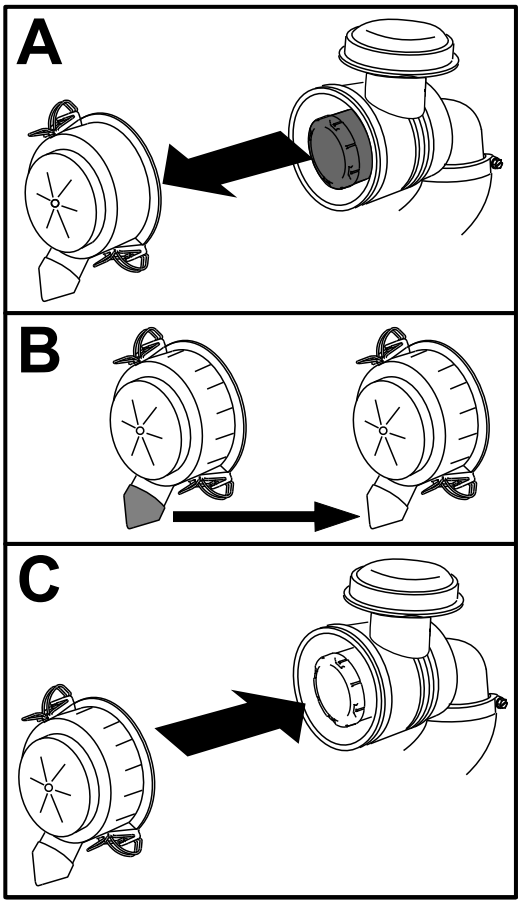


g236567

**Figure 35**

# Replacing the Air-Cleaner Element

**Service Interval:** Every 50 hours—Under special operating conditions (refer to Maintaining the Machine under Special Operating Conditions)—replace the air-cleaner element. Replace the air-cleaner element sooner if dirty or damaged.

Every 100 hours—Under normal operating conditions—replace the air-cleaner element. Replace the air-cleaner element sooner if dirty or damaged.

**Note:** Service the air-cleaner element more frequently (every few hours) if operating conditions are extremely dusty or sandy.

1. Gently slide the air-cleaner element out of the air-cleaner body (Figure 36).

   **Note:** Avoid knocking the air cleaner into the side of the body.

   ***Important:*** **Do not attempt to clean the air-cleaner element.**

2. Inspect the new element for damage by looking into the element while shining a bright light on the outside of the element.

   **Note:** Holes in the element appear as bright spots. Inspect the element for tears, an oily film, or damage to the rubber seal. If the element is damaged, do not use it.

3. Carefully slide the element into the air-cleaner body.

   ***Important:*** **Do not press on the soft inside area of the element.**

4. Install the air-cleaner cover with the side indicated as UP facing upward and secure the latches (Figure 36).

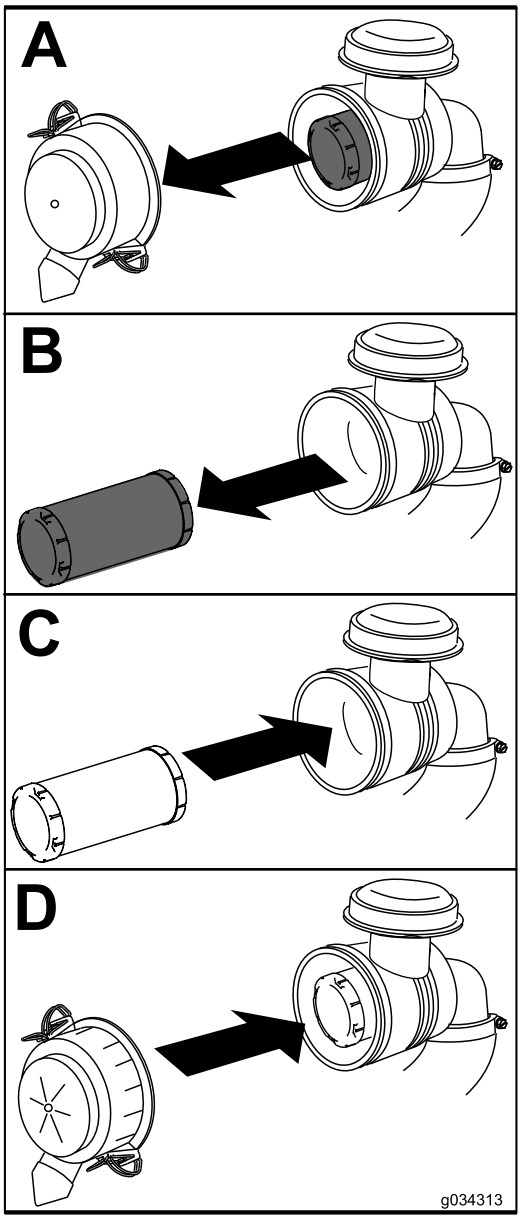


g034313

**Figure 36**

# Servicing the Engine Oil

## Engine-Oil Specifications

**Crankcase Capacity:** 1.0 L (1.1 US qt)

**Oil Type:** API service class SJ or higher detergent oil

**Viscosity:** See the table below.

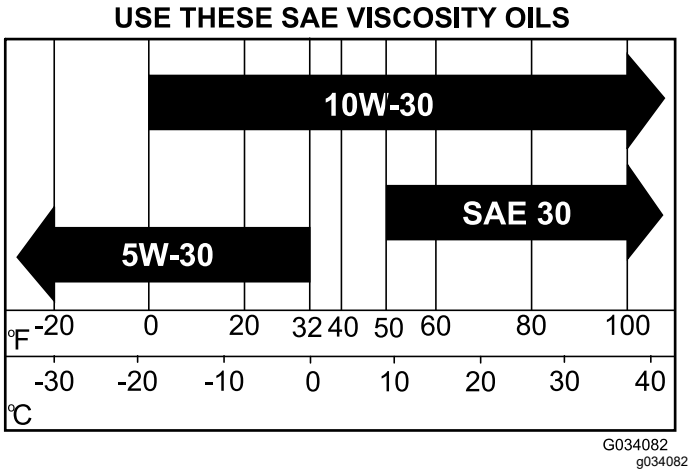


**Figure 37**

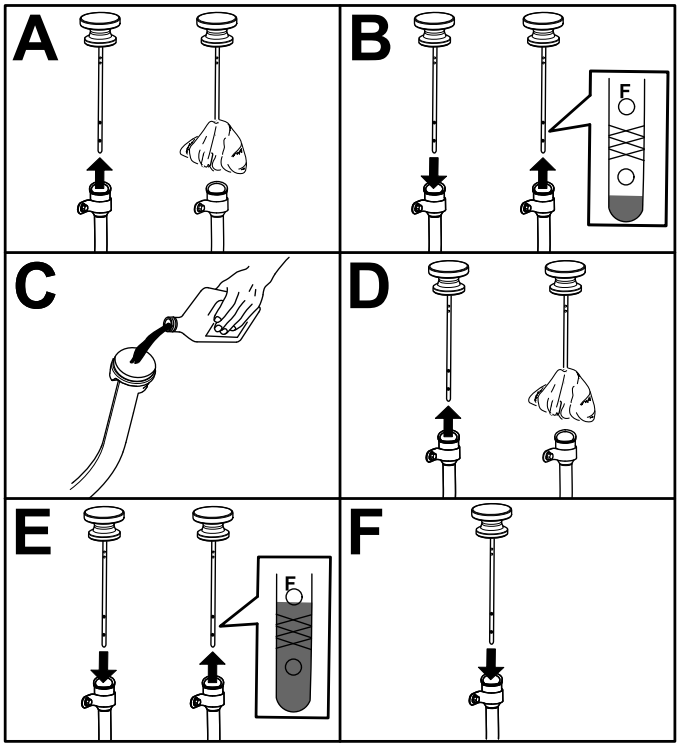


**Figure 38**

## Checking the Engine-Oil Level

**Service Interval:** Before each use or daily

**Note:** The machine is shipped with oil in the crankcase; however, check the oil before and after you start the engine.

**Note:** The best time to check the engine oil is when the engine is cool before it has been started for the day. If you have already run the engine, allow the oil to drain back down to the sump for at least 10 minutes before checking. If the oil level is low, add oil to bring the oil level to the Full mark. Do not overfill.

Check the engine-oil level as shown in Figure 38.

## Changing the Engine Oil

**Service Interval:** After the first 5 hours—Change the engine oil.

Every 50 hours—Under special operating conditions (refer to Maintaining the Machine under Special Operating Conditions)—change the engine oil.

Every 100 hours—Under normal operating conditions—change the engine oil.

**Note:** Change the oil more frequently when operating conditions are extremely dusty or sandy.

**Note:** Dispose of the used engine oil and oil filter at a certified recycling center.

1. Start the machine and let the engine run for a few minutes.
2. Park the machine on a level surface.
3. Engage the parking brake.
4. Shut off the engine and remove the key.
5. Raise the cargo bed and secure it with the prop rod; refer to Raising the Cargo Bed to the Service Position (page 20).
6. Change the engine oil as shown in Figure 39.

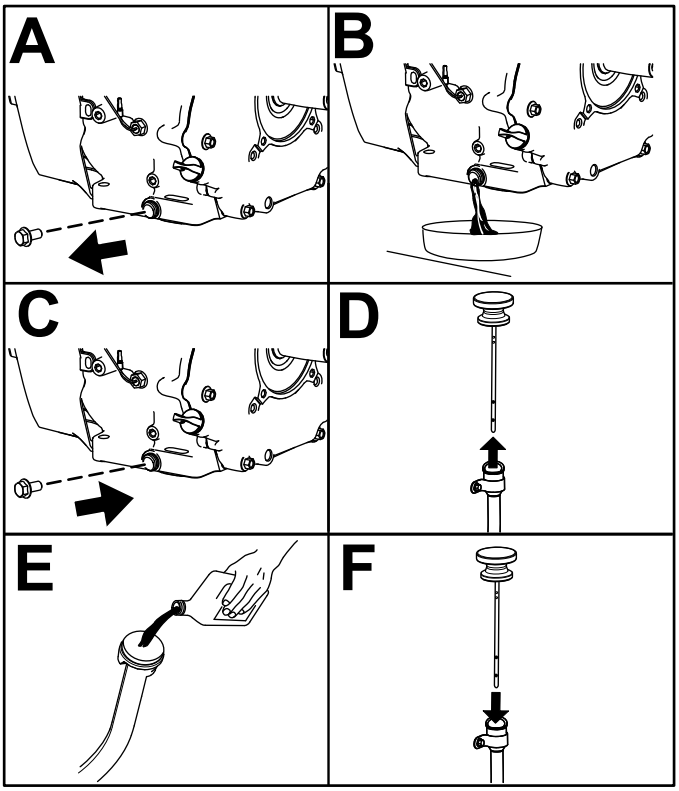


g192770

**Figure 39**

# Servicing the Spark Plug

## Checking and Replacing the Spark Plug

**Service Interval:** Every 100 hours/Yearly (whichever comes first) Replace the spark plug if necessary.

**Spark Plug Type:** Champion RC12LC4

**Air Gap:** 1 mm (0.04 inch)

***Important:*** **You must replace a cracked, fouled, dirty, or malfunctioning spark plug. Do not sand-blast, scrape, or clean electrodes by using a wire brush because grit may eventually release from the plug and fall into the cylinder. The result is usually a damaged engine.**

**Note:** The spark plug usually lasts a long time; however, the plug should be removed and checked whenever the engine malfunctions.

1. Clean the area around the spark plug so that foreign matter cannot fall into the cylinder when you remove the spark plug.
2. Pull the wire off the terminal of the spark plug.
3. Remove the plug from the cylinder head.
4. Check the condition of the side electrode, center electrode, and center electrode insulator to ensure that there is no damage (Figure 40).

   **Note:** Do not use a damaged or worn spark plug. Replace it with a new spark plug of the specified type.

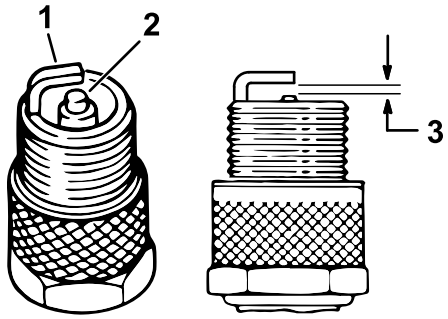


g379699

**Figure 40**

1. Center electrode insulator
2. Side electrode
3. Air gap (not to scale)—1 mm (0.04 inch)

5. Set the air gap between the center and side of the electrodes at 1 mm (0.04 inch) as shown in Figure 40.
6. Install the spark plug into the cylinder head, and torque the plug to 27 N·m (20 ft-lb).
7. Install the spark-plug wire.

8. Repeat steps 1 through 7 for the other spark plug.

## Adjusting the High/Low Idle

1. Lift the cargo bed and secure it with the prop rod.
2. At the throttle cable housing, loosen the forward jam nut and tighten the rear jam nut to increase the low idle (Figure 41).

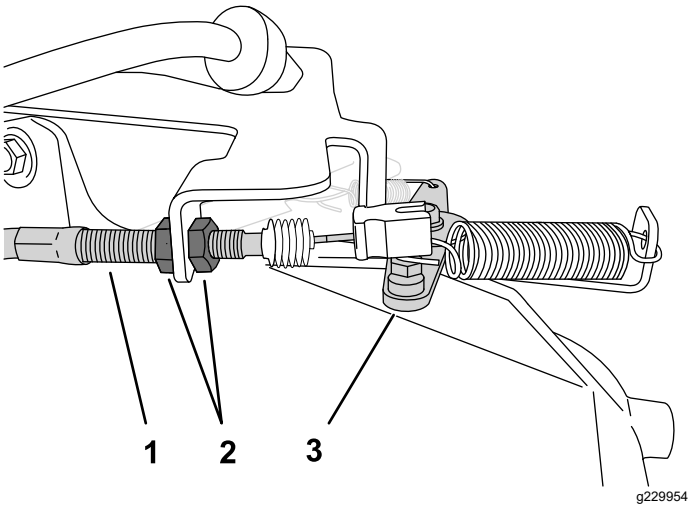


**Figure 41**

1. Throttle cable housing
2. Jam nuts
3. Throttle lever

3. Test the high idle with a tachometer:
   A. Ensure that the shift lever is in the NEUTRAL position.
   B. Start the engine.
   C. Fully press the accelerator pedal and measure the engine speed with a tachometer; the engine speed should be between 3,650 to 3,750 rpm. If it is not, shut off the engine and adjust the cable jam nuts.

   ***Important:*** **Do not lower the high idle. Test with a tachometer to ensure that the high idle is between 3,650 to 3,750 rpm.**
4. Lower and secure the cargo bed.

# *Fuel System Maintenance*

## Inspecting Fuel Lines and Connections

**Service Interval:** Every 400 hours/Yearly (whichever comes first)

Inspect the fuel lines, fittings, and clamps for signs of leaking, deterioration, damage, or loose connections.

**Note:** Repair any damaged or leaking fuel system component before using the machine.

# Replacing the Fuel Filter

**Service Interval:** Every 400 hours/Yearly (whichever comes first)

1. Park the machine on a level surface.
2. Engage the parking brake.
3. Shut off the engine and remove the key.
4. Raise the bed and support it with the prop rod.
5. Disconnect the battery; refer to Disconnecting the Battery (page 41).
6. Place a clean container under the fuel filter and replace the fuel filter as shown in Figure 42.

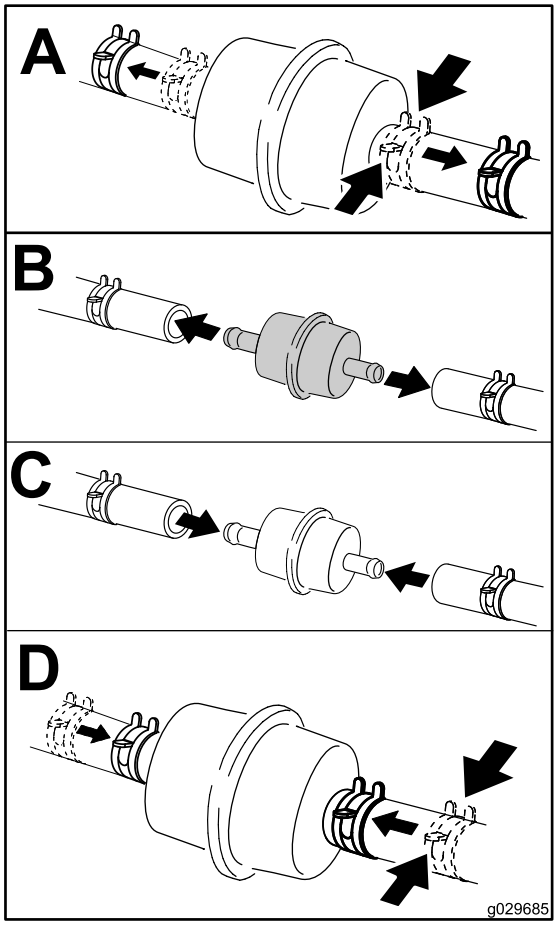


g029685

**Figure 42**

7. Connect the battery and lower the cargo bed; refer to Connecting the Battery (page 43).

# Servicing the Carbon Canister

## Checking the Air Filter for the Carbon Canister

**Service Interval:** After the first 50 hours

Every 200 hours

Check the opening at the bottom of the air filter for the carbon canister to ensure that it is clean and free of debris and obstructions (Figure 43).

Clean the air filter for the carbon canister with clean, compressed air.

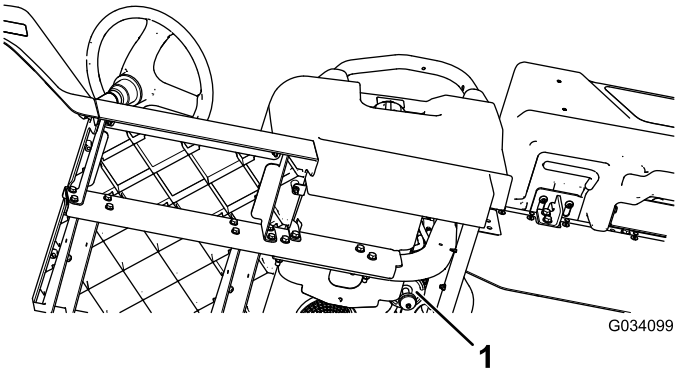


g034099

**Figure 43**

Located Beneath the Driver's Seat

1. Air-filter opening

# *Electrical System Maintenance*

## Electrical System Safety

- Disconnect the battery before repairing the machine. Disconnect the negative terminal first and the positive last. Connect the positive terminal first and the negative last.
- Charge the battery in an open, well-ventilated area, away from sparks and flames. Unplug the charger before connecting or disconnecting the battery. Wear protective clothing and use insulated tools.

## Servicing the Battery

**Battery voltage:** 12 V with 300 A (cold-cranking) at -18°C (0°F).

- Always keep the battery clean and fully charged.
- If the battery terminals are corroded, clean them with a solution of 4 parts water and 1 part baking soda.
- Apply a light coating of grease to the battery terminals to prevent corrosion.

## Disconnecting the Battery

**⚠ WARNING**

**Incorrect battery cable routing could damage the machine and cables, causing sparks. Sparks can cause the battery gasses to explode, resulting in personal injury.**

- **Always disconnect the negative (black) battery cable before disconnecting the positive (red) cable.**
- **Always reconnect the positive (red) battery cable before reconnecting the negative (black) cable.**
- **Always keep the battery strap in place to protect and secure the battery.**

**⚠ WARNING**

**Battery terminals or metal tools could short against metal machine components, causing sparks. Sparks can cause the battery gasses to explode, resulting in personal injury.**

- **When removing or installing the battery, do not allow the battery terminals to touch any metal parts of the machine.**
- **Do not allow metal tools to short between the battery terminals and metal parts of the machine.**

Disconnect the battery as shown in Figure 44.

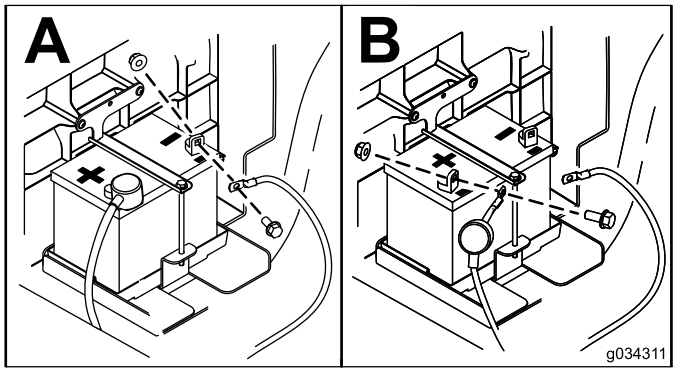


g034311

**Figure 44**

## Removing the Battery

1. Disconnect the battery cables; refer to Disconnecting the Battery (page 41).
2. Remove the battery as shown in Figure 45.

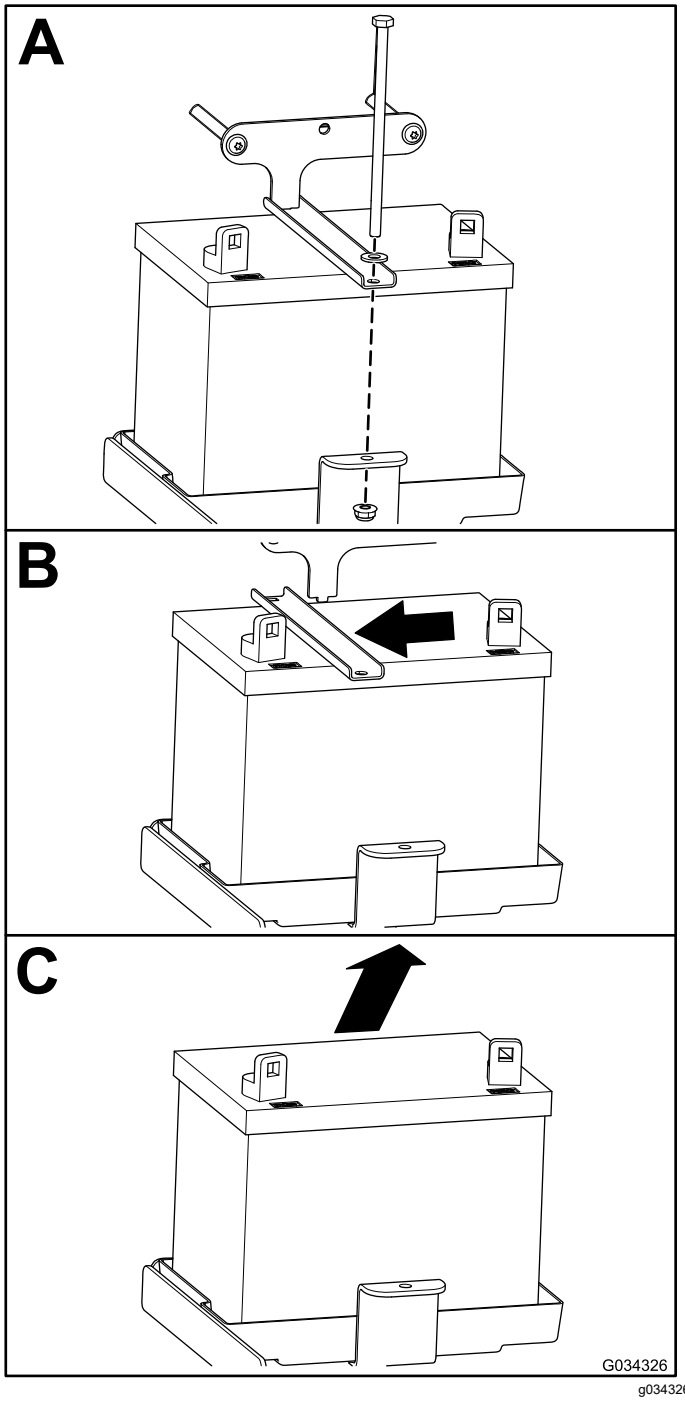


**Figure 45**

## Installing the Battery

1. Install the battery as shown in Figure 46.

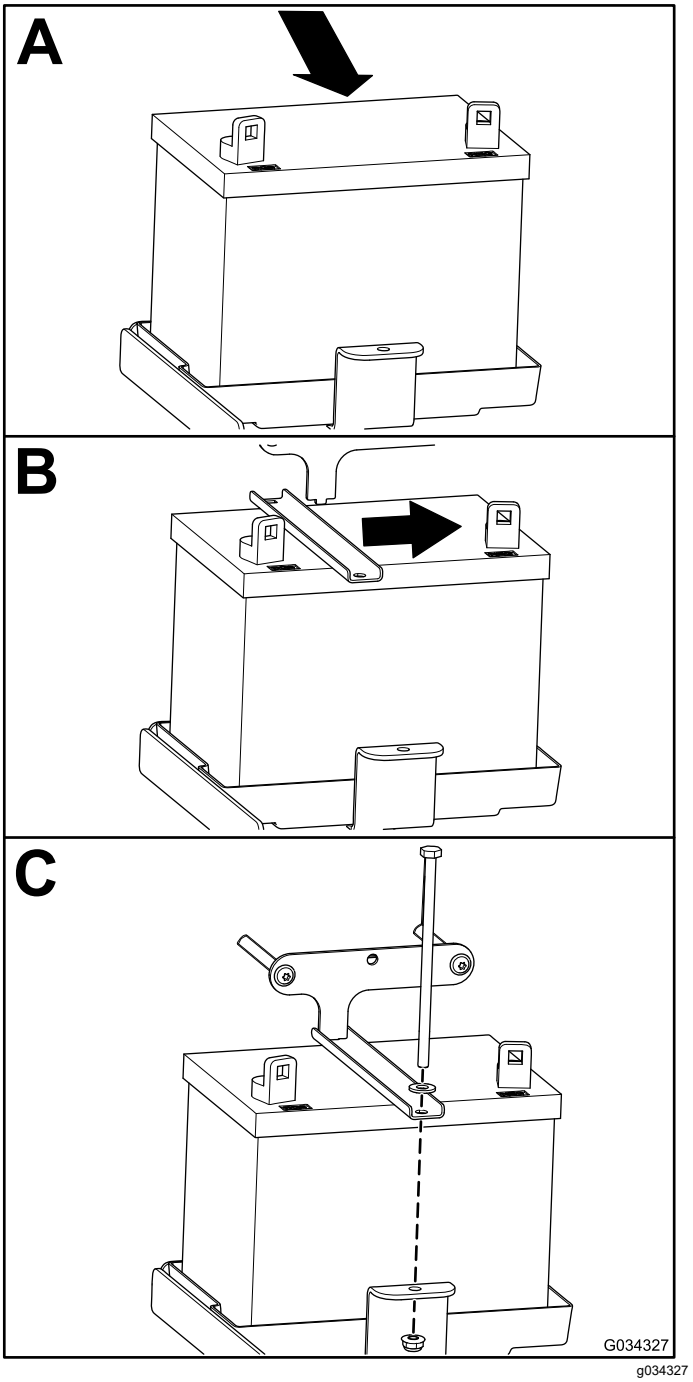


**Figure 46**

2. Connect the battery cables; refer to Connecting the Battery (page 43).

## Connecting the Battery

Connect the battery as shown in Figure 47.

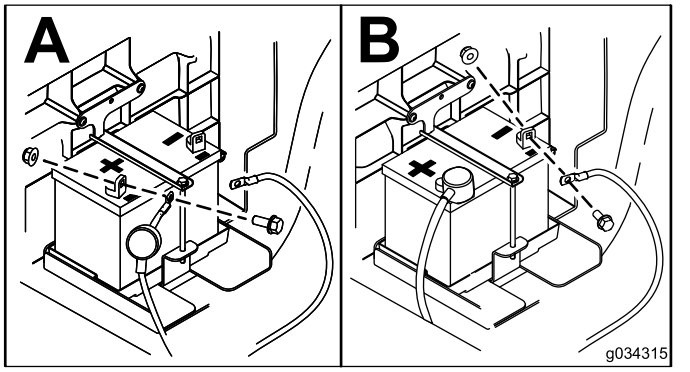


Figure 47

## Charging the Battery

**⚠ WARNING**

**Charging the battery produces gasses that can explode.**

**Never smoke near the battery and keep sparks and flames away from battery.**

***Important:*** **Always keep the battery fully charged. This is especially important to prevent battery damage when the temperature is below 0°C (32°F).**

1. Remove the battery from the machine; refer to Removing the Battery (page 42).
2. Connect a 3 to 4 A battery charger to the battery posts. Charge the battery at a rate of 3 to 4 A for 4 to 8 hours (12 V).

   **Note:** Do not overcharge the battery.
3. Install the battery; refer to Installing the Battery (page 42).

## Storing the Battery

If you store the machine for more than 30 days, remove the battery and charge it fully. Either store it on the shelf or on the machine. Leave the cables disconnected if it is stored on the machine. Store the battery in a cool atmosphere to avoid quick deterioration of the charge in the battery. To prevent the battery from freezing, make sure it is fully charged.

# Replacing the Fuses

There are 5 fuses in the electrical system; the other slots are open for options. They are located beneath the seat assembly (Figure 48).

| | |
|---|---|
| Horn | 20 A |
| Main power | 15 A |
| Headlights | 10 A |
| USB power point/options | 10 A |
| Fuel | 10 A |
| Optional lift kit—open | 15 A |

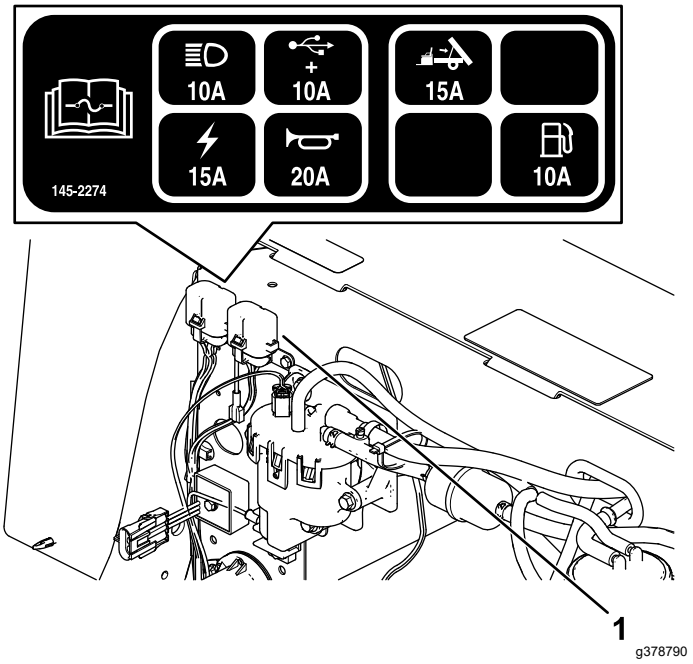


Figure 48

1. Fuse block

# Maintaining the Headlights

## Replacing the Headlight

Specification: See your *Parts Catalog*.

1. Disconnect the battery; refer to Disconnecting the Battery (page 41).
2. Open the hood.
3. Disconnect the electrical connector for the harness from the connector of the lamp assembly (Figure 49).

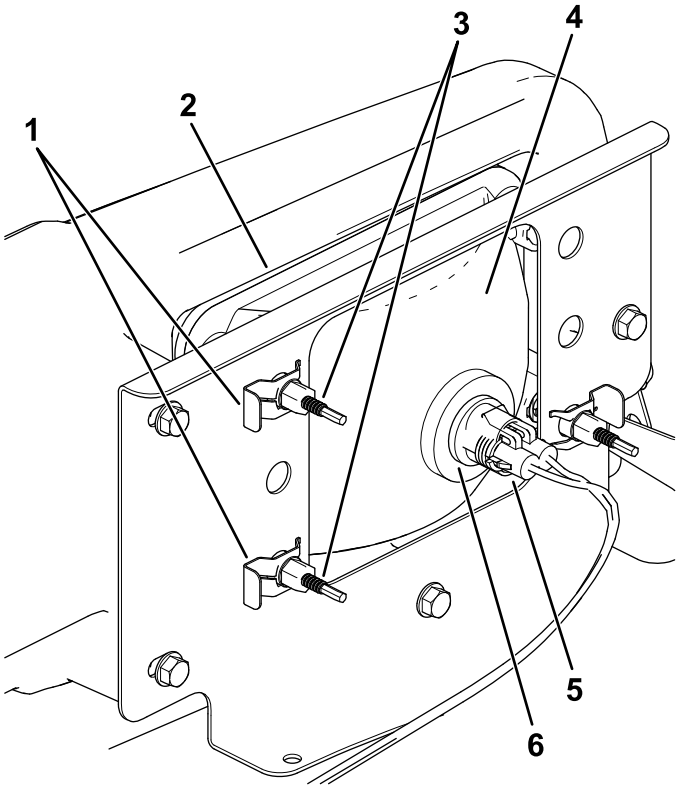


**Figure 49**

1. Speed clip
2. Opening in the bumper
3. Adjustment screw
4. Headlight
5. Harness-electrical connector
6. Lamp assembly

4. Remove the speed clips that secure the headlight to the headlight bracket (Figure 49).

   **Note:** Retain all parts for installation of the new headlight.
5. Remove the headlight assembly by moving it forward through the opening in the front bumper (Figure 49).
6. Install the new headlight through the opening in the bumper (Figure 49).

   **Note:** Ensure the adjustment posts are lined up with the holes in the mounting bracket behind the bumper.
7. Secure the headlight assembly with the speed clips that you removed in step 4.
8. Connect the electrical connector for the harness to the connector of the lamp assembly (Figure 49).
9. Adjust the headlights to direct the beams to the desired position, refer to Adjusting the Headlights (page 44).

## Adjusting the Headlights

Use the following procedure to adjust the headlight beam position whenever a headlight assembly is replaced or removed.

1. Park the machine on a level surface with the headlights approximately 7.6 m (25 ft) from a wall (Figure 50).
2. Measure the distance from the floor to the center of the headlight and make a mark on the wall at the same height.
3. Turn the key switch to the ON position, and turn on the headlights.
4. Take note of where the headlights aim on the wall.

   The brightest part of the headlight beam should be 20 cm (8 inches) below the mark placed on the wall (Figure 50).

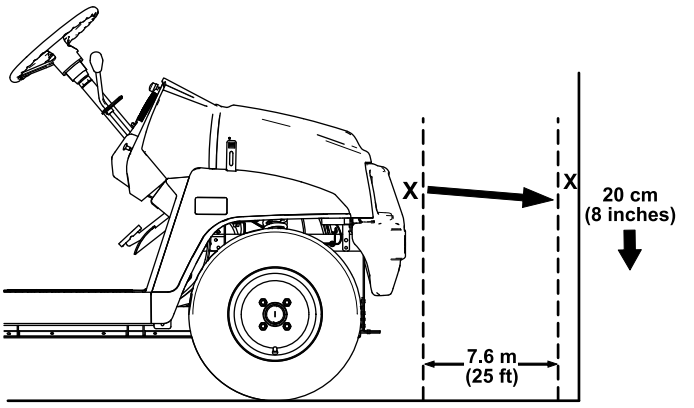


**Figure 50**

5. At the back of the headlight assembly, rotate adjustment screws (Figure 49) to pivot the headlight assembly and align the position of the cast beam.
6. Connect the battery and close the hood; refer to Connecting the Battery (page 43).

# *Drive System Maintenance*

## Maintaining the Tires

**Service Interval:** Every 100 hours—Check the condition of the tires and rims.

Every 100 hours—Torque the wheel-lug nuts.

1. Inspect the tires and rims for signs of wear and damage.

   **Note:** Operating accidents, such as hitting curbs, can damage a tire or rim and also disrupt wheel alignment, so inspect tire condition after an accident.

2. Torque the wheel lug nuts to 108 to 122 N·m (80 to 90 ft-lb).

## Inspecting the Steering and Suspension Components

**Service Interval:** Every 100 hours—Inspect the steering and suspension for loose or damaged components.

With the steering wheel at the centered position (Figure 51), turn the steering wheel to the left or right. If you turn the steering wheel more than 13 mm (1/2 inch) to the left or right, and the tires do not turn, check the following steering and suspension components to ensure that they are not loose or damaged:

- Steering shaft to the steering-rack assembly joint

  ***Important:*** **Inspect the condition and security of the pinion-shaft seal (Figure 52).**

- Steering-rack assembly tie rods

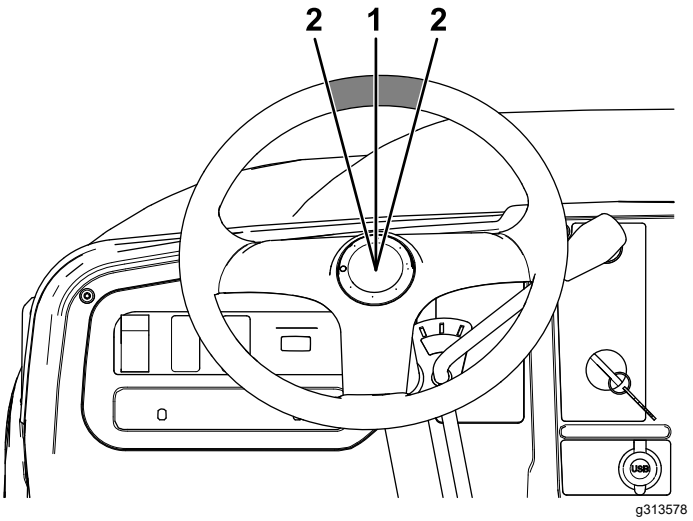


**Figure 51**

1. Steering wheel at the centered position
2. 13 mm (1/2 inch) from the center of the steering wheel

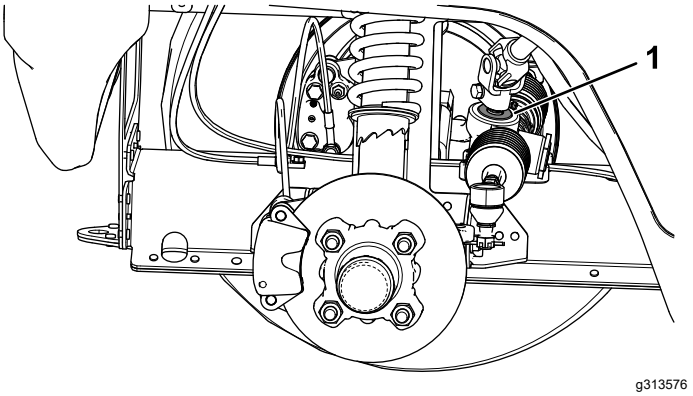


**Figure 52**

1. Pinion-shaft seal

# Adjusting the Front Wheel Alignment

**Service Interval:** Every 100 hours/Yearly (whichever comes first)—Check the front wheel camber and toe-in.

## Preparing to Adjust Camber or Toe-in

1. Check the tire pressure to ensure that the front tires are inflated to 82 kPa (12 psi).
2. Either add weight to the driver's seat equal to the average operator who will run the machine, or have an operator sit on the seat. The weight or operator must remain on the seat for the duration of the adjustment procedure.
3. On a level surface, roll the machine straight back 2 to 3 m (6 to 10 ft) and then straight forward to the original starting position. This allows the suspension to settle into the operating position.

## Adjusting the Camber

**Owner provided tools:** spanner wrench, Toro Part 132-5069; refer to your authorized Toro distributor.

***Important:*** **Make the camber adjustments only if you are using a front attachment or if there is uneven tire wear.**

1. Check the camber alignment at each wheel; the alignment should be as close to neutral (zero) as possible.

   **Note:** The tires should be aligned with the tread evenly on the ground to reduce uneven wear.

2. If the wheel camber is out of alignment, use the spanner wrench to rotate the collar on the shock absorber to align the wheel (Figure 53).

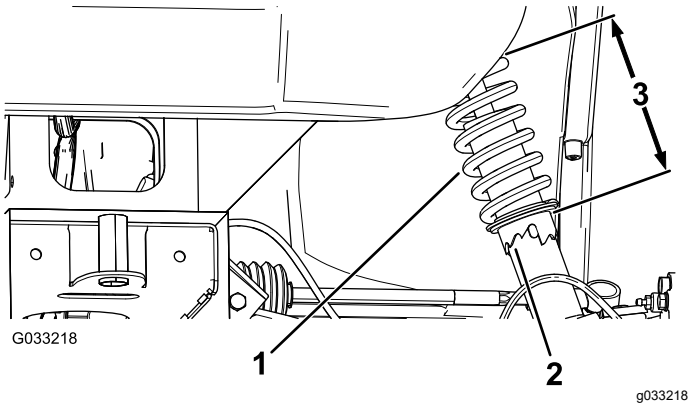


**Figure 53**

1. Shock-absorber spring
2. Collar
3. Spring length

## Adjusting the Front Wheel Toe-in

***Important:*** **Before adjusting toe-in, ensure that the camber adjustment is as close to neutral as possible; refer to Adjusting the Camber (page 46).**

1. Measure the distance between both of the front tires at the axle height at both the front and rear of the front tires (Figure 54).

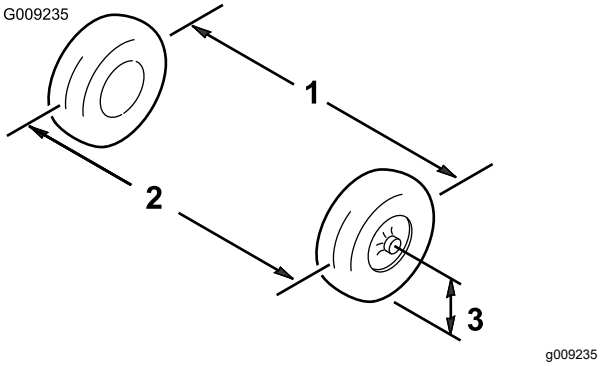


**Figure 54**

1. Tire center line—back
2. Tire center line—front
3. Axle center line

2. If the measurement does not fall within 0 to 6 mm (0 to 1/4 inch), loosen the jam nuts at the outer end of the tie rods (Figure 55).

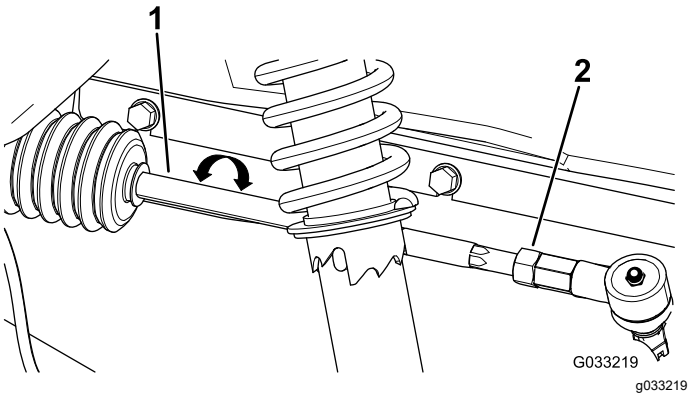


**Figure 55**

1. Tie rod
2. Jam nut

3. Rotate both tie rods to move the front of the tire inward or outward.
4. Tighten the tie rod jam nuts when the adjustment is correct.
5. Ensure that there is full travel of the steering wheel in both directions.

# Checking the Transaxle-Fluid Level

**Service Interval:** Every 100 hours

**Fluid Type:** SAE 80W-90 (API MT-1) or SAE 80W-90 (API GL-5)

1. Park the machine on a level surface.
2. Engage the parking brake.
3. Shut off the engine and remove the key.
4. Remove the fill plug on the transaxle (Figure 56).

   **Note:** The fluid level should be even with the bottom of the fill plug.

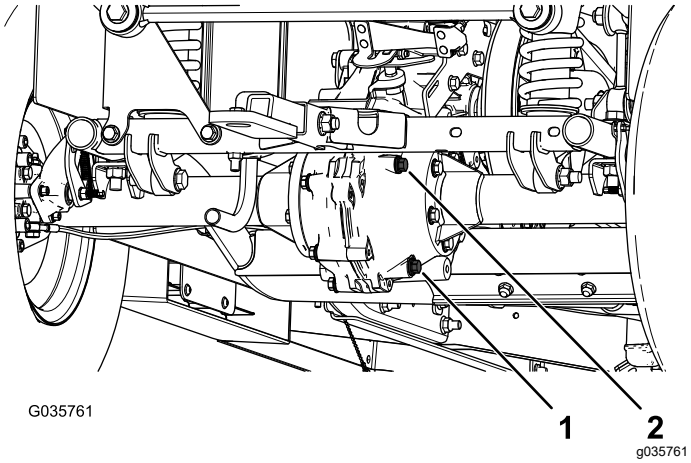


**Figure 56**

1. Drain plug
2. Fill plug

5. If the fluid level is low, remove the fill plug and add the specified fluid until it runs out of the hole (Figure 56).
6. Replace the fill plug and torque it to 20 to 27 N·m (15 to 20 ft-lb).

# Changing the Transaxle Fluid

**Service Interval:** Every 800 hours/Yearly (whichever comes first)

**Fluid Type:** SAE 80W-90 (API MT-1) or SAE 80W-90 (API GL-5)

**Fluid Capacity:** 1.6 L (1.7 US qt)

1. Align a drain pan under the drain plug (Figure 56).
2. Remove the fill plug and the seal (Figure 56).

   **Note:** Retain the fill plug and seal for installation in step 6.
3. Remove the drain plug and the seal, and allow the fluid to drain completely (Figure 56).

   **Note:** Retain the drain plug and seal for installation in step 4.
4. Install the drain plug and seal, and torque it to 20 to 27 N·m (15 to 20 ft-lb).
5. Fill the transaxle with the specified fluid until it runs out of the fill hole.
6. Install the fill plug and seal, and torque it to 20 to 27 N·m (15 to 20 ft-lb).

# Checking the Neutral Gear-Shift Position

**Service Interval:** Every 100 hours

When performing routine maintenance and/or engine diagnostics, shift the transaxle into NEUTRAL. The machine has a NEUTRAL position on the gear-shift selector, which controls the neutral in the transaxle. Perform the following steps to ensure that the neutral shift lever operates the transaxle neutral correctly:

1. Set the gear-shift selector to the NEUTRAL position.
2. Rotate the secondary clutch (Figure 63) to see if it spins freely in the NEUTRAL position.
3. Set the gear-shift selector to the FORWARD position.
4. Rotate the secondary clutch (Figure 63) to see if it rotates the rear wheels.
5. Set the gear-shift selector to the REVERSE position.
6. Rotate the secondary clutch (Figure 63) to see if it rotates the rear wheels.
7. If any of these tests fail, proceed to Adjusting the Neutral Gear-Shift Position (page 48).

# Adjusting the Neutral Gear-Shift Position

1. Loosen the jam nuts on the gear-shift cable and adjust them as necessary (Figure 57).

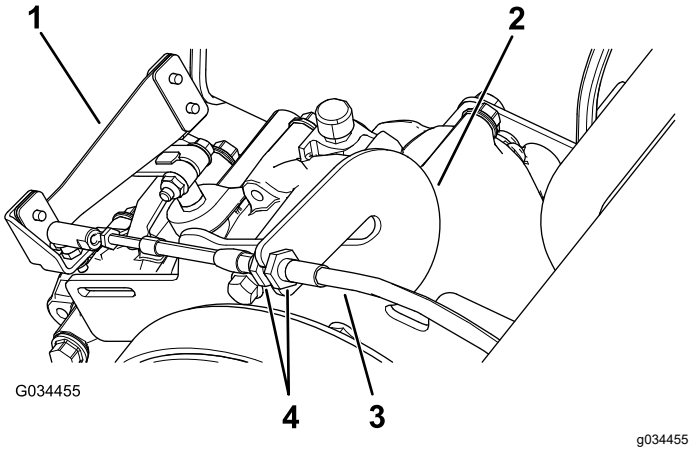


**Figure 57**

1. Shift lever
2. Spanner bar
3. Gear-shift cable
4. Jam nuts

2. Test the gear-shift position by rotating the gear-shift selector to the 3 different positions and check to see if the shift lever (Figure 57) shifts properly when shifting the gears; refer to Gear-Shift Lever and Gear-Shift Indicator (page 12).
3. Verify that all of the positions are working correctly by repeating the steps in Checking the Neutral Gear-Shift Position (page 48).

# Maintaining the Primary Drive Clutch

**Service Interval:** Every 400 hours/Yearly (whichever comes first)

**⚠ CAUTION**

**The dust in the clutch will become airborne and could damage your eyes or you could inhale it, causing breathing difficulties.**

**Wear safety goggles and a dust mask or other eye and respiratory protection when performing this procedure.**

1. Raise and latch the cargo bed.
2. Remove the 3 bolts securing the cover to the clutch, and remove the cover (Figure 58).

   **Note:** Retain the cover and bolts for installation.

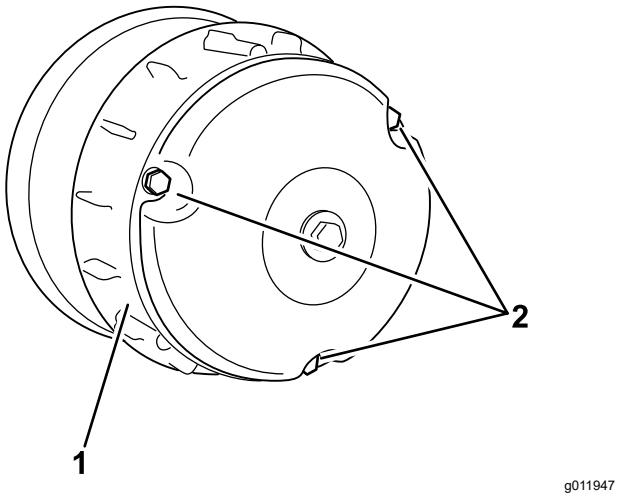


**Figure 58**

1. Cover
2. Bolts

3. Thoroughly clean the inside of the cover and the inner components of the clutch using compressed air.
4. Install the clutch cover and secure it with the 3 bolts (Figure 58) that you removed in 2.
5. Lower the cargo bed.

# Reducing the Top Speed

**⚠ CAUTION**

**The dust in the clutch will become airborne and could damage your eyes or you could inhale it, causing breathing difficulties.**

**Wear safety goggles and a dust mask or other eye and respiratory protection when performing this procedure.**

1. Raise and latch the cargo bed; refer to Raising the Cargo Bed to the Service Position (page 20).
2. Remove the bolts securing the primary clutch cover as shown in Figure 59.

   ***Important:*** **Use caution when removing the clutch cover; the spring is under compression.**

   ***Important:*** **Take note of the X orientation on the clutch covers and clutch assemblies for later installation.**

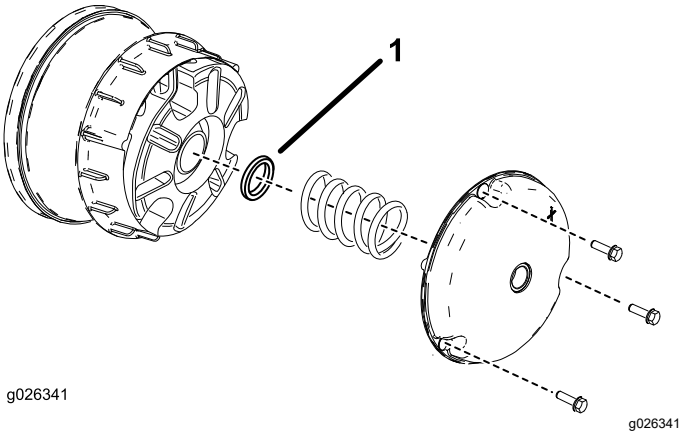


**Figure 59**

1. Clutch spacer

3. Remove the spring.
4. Add or remove spacers to adjust the top speed. Use the following table to determine the amount of spacers needed.

| Spacers | Top Speed |
|---|---|
| 2 (standard) | 16 mph (standard) |
| 3 | 12 mph |
| 4 | 9 mph |
| 5 | 6 mph |
| 6 | 4 mph |

   ***Important:*** **Do not operate the machine without at least 2 clutch spacers in place.**

5. Install the spring and clutch cover.

***Important:*** **Ensure that the X is placed back in the original location.**

6. Torque the bolts to 179 to 228 N·m (132 to 168 in-lb).

# *Cooling System Maintenance*

## Cooling System Safety

- Swallowing engine coolant can cause poisoning; keep out of reach from children and pets.
- Discharge of hot, pressurized coolant or touching a hot radiator and surrounding parts can cause severe burns.
  - Always allow the engine to cool at least 15 minutes before removing the radiator cap.
  - Use a rag when opening the radiator cap, and open the cap slowly to allow steam to escape.
- Do not operate the machine without the covers in place.
- Keep your fingers, hands and clothing clear of rotating fan and drive belt.
- Shut off the engine and remove the key before performing maintenance.

## Cleaning the Engine-Cooling Areas

**Service Interval:** Every 100 hours Clean the cooling system twice as often during special operating conditions; refer to Maintaining the Machine under Special Operating Conditions.

***Important:*** **Operating the engine with a blocked rotating screen, dirty or plugged cooling fins, or cooling shrouds removed causes engine damage due to overheating.**

***Important:*** **Never clean the engine with a pressure washer because water could contaminate the fuel system.**

Clean the inlet, cooling fins, and external surfaces of the engine.

**Note:** Clean the engine cooling components more often under extremely dusty and dirty conditions.

# Brake Maintenance

## Checking the Parking Brake

1. Engage the parking brake by pulling the parking-brake lever toward you, until you feel tension.
2. If you do not feel tension when pulling the parking-brake toward you within 11.4 to 16.5 cm (4-1/2 to 6-1/2 inches) from the “P” symbol on the dash, then you need to adjust the parking brake; refer to Adjusting the Parking Brake (page 51).

## Adjusting the Parking Brake

1. Ensure that the parking brake is disengaged.
2. Using jack stands, lift the rear of the machine; refer to Lifting the Machine (page 29).
3. Using 2 wrenches, hold the adjusting post on the caliper in place with 1 wrench, and loosen the jam nut 1/4 turn with the other wrench (Figure 60).

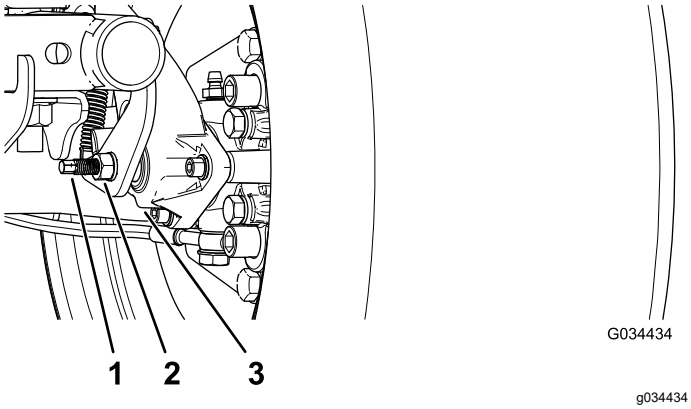


**Figure 60**

1. Adjusting post
2. Jam nut
3. Caliper

4. While holding the adjusting post and the jam nut in place, turn the adjusting post in to tighten (Figure 60).

   **Note:** Perform this step until you feel drag on the wheel.
5. While holding the adjusting post and the jam nut in place, back off 1/4 turn (Figure 60).
6. While holding the adjusting post and the jam nut in place, tighten the jam nut (Figure 60).
7. Perform steps 1 through 6 to the other side.
8. Verify that the parking brake is adjusted to the proper tension; refer to Checking the Parking Brake (page 51).

   **Note:** If you cannot adjust the parking brake to the required tension, the brake pads may be worn and need to be replace. Contact your authorized Toro distributor for assistance.

## Checking the Brake-Fluid Level

**Service Interval:** Before each use or daily Check the brake-fluid level before the motor is first used.

**Brake Fluid Type:** DOT 3

1. Park the machine on a level surface.
2. Engage the parking brake.
3. Shut off the engine and remove the key.
4. Raise the hood to gain access to the master-brake cylinder and reservoir (Figure 61).

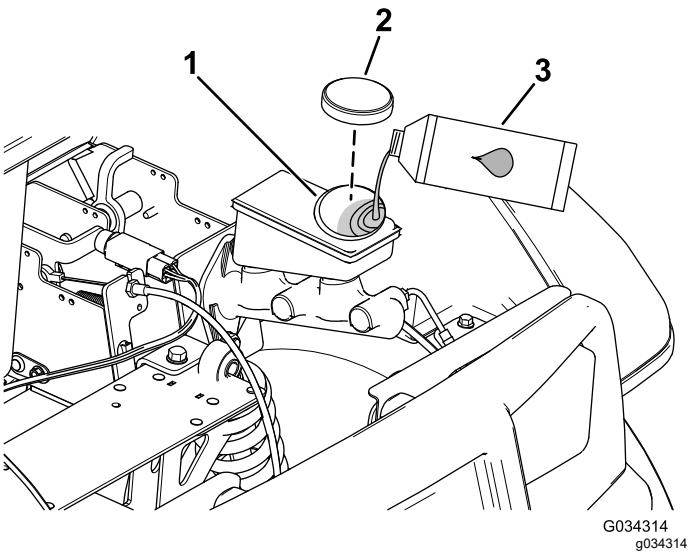


**Figure 61**

1. Filler neck (reservoir)
2. Reservoir cap
3. DOT 3 brake fluid

5. Look at the outline of the fluid level at the side of the reservoir (Figure 62).

   **Note:** The level should be above the Minimum line.

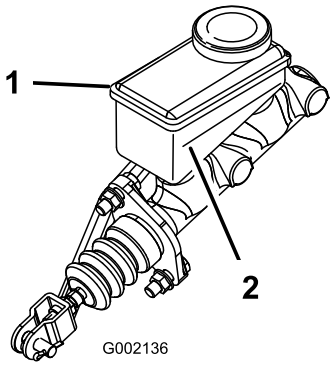


g002136

**Figure 62**

1. Brake-fluid reservoir
2. Minimum line

6. If the fluid level is low, perform the following:
   A. Clean the area around the reservoir cap and remove the cap (Figure 61).
   B. Add DOT 3 brake fluid to the reservoir until the fluid level is above the Minimum line (Figure 62).

      **Note:** Do not overfill the reservoir with brake fluid.

   C. Install the reservoir cap (Figure 61).
7. Close the hood of the machine.

# Inspecting the Brakes

**Service Interval:** Every 100 hours

***Important:*** **Brakes are a critical safety component of the machine. Closely inspect them at the recommended service interval to ensure optimum performance and safety.**

- Inspect the brake lining for wear or damage. If the lining (brake pad) thickness is less than 1.6 mm (1/16 inch), replace the brake lining.
- Inspect the backing plate and other components for signs of excessive wear or deformation. Replace any deformed components.
- Check the brake-fluid level; refer to Checking the Brake-Fluid Level (page 51).

# Replacing the Service and Parking-Brake Pads

**Service Interval:** Every 400 hours

Contact your authorized Toro distributor to inspect and possibly replace the service and parking-brake pads.

# Changing the Brake Fluid

**Service Interval:** Every 1,000 hours

Contact your authorized Toro distributor.

# *Belt Maintenance*

# Servicing the Drive Belt

## Checking the Drive Belt

**Service Interval:** After the first 8 hours

Every 200 hours

1. Park the machine on a level surface.
2. Engage the parking brake.
3. Shut off the engine and remove the key.
4. Raise the cargo bed and secure it with the prop rod; refer to Raising the Cargo Bed to the Dump Position (page 19).
5. Shift the transmission into NEUTRAL.
6. Rotate and inspect the belt (Figure 63) for signs of excessive wear or damage.

   **Note:** Replace the belt if it is excessively worn or damaged; refer to Replacing the Drive Belt (page 53).

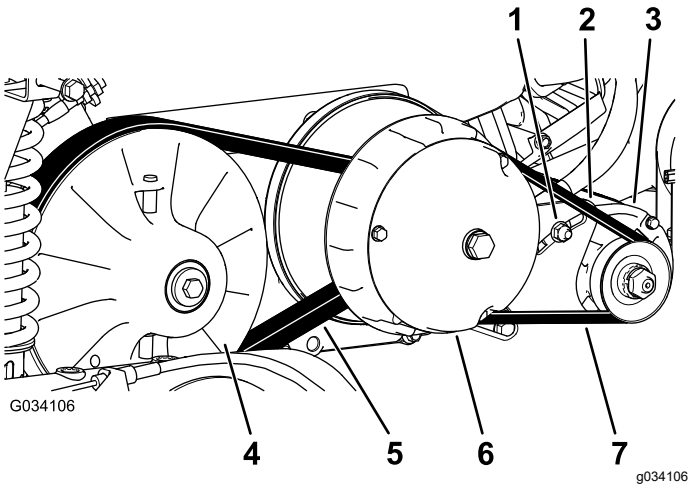


**Figure 63**

1. Generator-pivot nut
2. Generator-pivot bracket
3. Starter generator
4. Secondary clutch
5. Drive belt
6. Primary clutch
7. Starter-generator belt

7. Lower the cargo bed.

## Replacing the Drive Belt

1. Raise the cargo bed; refer to Raising the Cargo Bed to the Dump Position (page 19).
2. Shift the transmission into the NEUTRAL position, engage the parking brake, rotate the key switch to the OFF position, and remove the key.
3. Rotate and route the belt over the secondary clutch (Figure 63).
4. Remove the belt from the primary clutch (Figure 63).

   **Note:** Discard the old belt.
5. Align the new belt over the primary clutch (Figure 63).
6. Rotate and route the belt over the secondary clutch (Figure 63).
7. Lower the cargo bed.

# Adjusting the Starter-Generator Belt

**Service Interval:** After the first 8 hours

Every 200 hours

1. Raise the cargo bed; refer to Raising the Cargo Bed to the Dump Position (page 19).
2. Loosen the pivot nut for the starter generator (Figure 63).
3. Align a pry bar between the engine mount and starter.
4. Apply downward pressure to the pry bar to rotate the starter down in the slot until the belt tension only allows 6 mm (1/4 inch) belt deflection with 44 N·m (10 ft-lb) of force (Figure 63).
5. Tighten the pivot nut hand tight, and remove the pry bar (Figure 63).
6. Torque the pivot nut to 88 to 115 N·m (65 to 85 ft-lb).
7. Lower the cargo bed.

# Chassis Maintenance

## Adjusting the Cargo-Bed Latches

If the cargo-bed latch is out of adjustment, the cargo bed vibrates up and down as you drive the machine. You can adjust the latch posts to make the latches hold the cargo bed snugly to the chassis.

1. Verify that the cargo bed is latching.

   **Note:** If the cargo bed does not latch, the bed-latch striker is likely too low. If the cargo bed latches, but vibrates up and down as you drive, the bed-latch striker is likely too high.

2. Raise the cargo bed; Raising the Cargo Bed to the Dump Position (page 19).
3. Loosen the 2 bolts on the bed-latch striker and move the striker up or down, depending on if the striker is too high or too low (Figure 64).

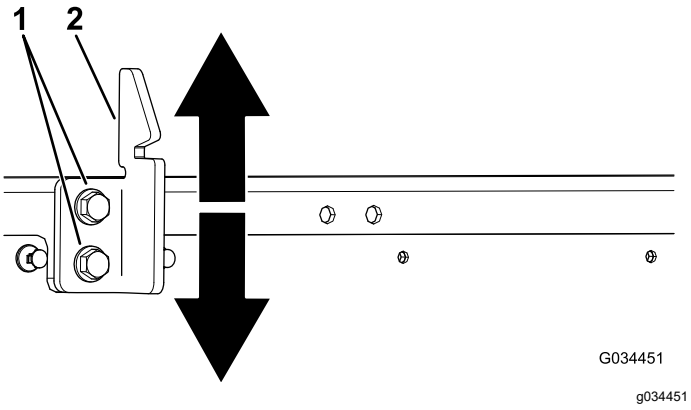


**Figure 64**

1. Bolts
2. Bed-latch striker

4. Tighten the 2 bolts on the bed-latch striker (Figure 64).
5. Verify that the adjustment is correct by latching the cargo bed several times.

# Cleaning

## Washing the Machine

**Service Interval:** Before each use or daily—Wash the machine.

Wash the machine as needed using water alone or with a mild detergent. You may use a rag when washing the machine.

***Important:*** **Do not use brackish or reclaimed water to clean the machine.**

***Important:*** **Do not use power-washing equipment to wash the machine. Power-washing equipment may damage the electrical system, loosen important decals, or wash away necessary grease at friction points. Avoid excessive use of water near the control panel, engine, and battery.**

***Important:*** **Do not wash the machine with the engine running. Washing the machine with the engine running may result in internal engine damage.**

# Storage

## Storage Safety

- Shut off the machine, remove the key, and wait for all movement to stop before you leave the operator's position. Allow the machine to cool before adjusting, servicing, cleaning, or storing it.
- Do not store the machine or fuel container where there is an open flame, spark, or pilot light, such as on a water heater or other appliance.

## Storing the Machine

1. Park the machine on a level surface.
2. Engage the parking brake.
3. Shut off the engine and remove the key.
4. Clean the dirt and grime from the entire machine, including the outside of the cylinder-head fins of the engine and blower housing.

   ***Important:*** **You can wash the machine with mild detergent and water. Do not use power-washing equipment to wash the machine. Pressure washing the machine may damage the electrical system or wash away necessary grease at friction points. Avoid excessive use of water near the control panel, lights, engine, and the battery.**
5. Inspect the brakes; refer to Inspecting the Brakes (page 52).
6. Service the air cleaner; refer to Servicing the Air Cleaner (page 35).
7. Change the engine oil; refer to Servicing the Engine Oil (page 37).
8. Check the tire pressure; refer to Checking the Tire Pressure (page 15).
9. For storage over 30 days, prepare the fuel system as follows:
   A. Add a fuel stabilizer/conditioner to fresh fuel in the tank. Do not use an alcohol-based fuel stabilizer (ethanol or methanol).

      ***Important:*** **Do not store fuel containing stabilizer/conditioner longer than the duration recommended by the fuel-stabilizer manufacturer.**

   B. Run the engine to distribute conditioned fuel through the fuel system for 5 minutes.

   C. Shut off the engine, allow the engine to cool, and drain the fuel tank.

      **Note:** Dispose of fuel properly. Recycle as according to local codes.

   D. Start the engine again and run it until it stops.

   E. Choke the engine.

   F. Start and run the engine until it does not start again.
10. Remove the spark plug and check their condition; refer to Servicing the Spark Plug (page 38).
11. With the spark plugs removed from the engine, pour 15 ml (2 tablespoons) of engine oil into the spark-plug hole.
12. Use the electric starter to crank the engine and distribute the oil inside the cylinder.
13. Install the spark plug(s) and tighten it to recommended torque; refer to Servicing the Spark Plug (page 38).

    **Note:** Do not install the wire on the spark plug(s).
14. Remove the battery from the chassis, and charge it fully; refer to Removing the Battery (page 42).

    **Note:** Do not connect the battery cables to the battery posts during storage.

    ***Important:*** **The battery must be fully charged to prevent it from freezing and being damaged at temperatures below 0°C (32°F). A fully charged battery maintains its charge for about 50 days at temperatures lower than 4°C (40°F).**
15. Check and tighten all fasteners. Repair or replace any part that is damaged.
16. Paint all scratched or bare metal surfaces with paint available from your authorized Toro distributor.
17. Store the machine in a clean, dry garage or storage area.
18. Remove the key from the key switch and put it in a safe place out of the reach of children.
19. Cover the machine to protect it and keep it clean.

# Notes:

# California Proposition 65 Warning Information

## What is this warning?

You may see a product for sale that has a warning label like the following:



**WARNING:** Cancer and Reproductive Harm—www.p65Warnings.ca.gov.

## What is Prop 65?

Prop 65 applies to any company operating in California, selling products in California, or manufacturing products that may be sold in or brought into California. It mandates that the Governor of California maintain and publish a list of chemicals known to cause cancer, birth defects, and/or other reproductive harm. The list, which is updated annually, includes hundreds of chemicals found in many everyday items. The purpose of Prop 65 is to inform the public about exposure to these chemicals.

Prop 65 does not ban the sale of products containing these chemicals but instead requires warnings on any product, product packaging, or literature with the product. Moreover, a Prop 65 warning does not mean that a product is in violation of any product safety standards or requirements. In fact, the California government has clarified that a Prop 65 warning "is not the same as a regulatory decision that a product is 'safe' or 'unsafe.'" Many of these chemicals have been used in everyday products for years without documented harm. For more information, go to https://oag.ca.gov/prop65/faqs-view-all.

A Prop 65 warning means that a company has either (1) evaluated the exposure and has concluded that it exceeds the "no significant risk level"; or (2) has chosen to provide a warning based on its understanding about the presence of a listed chemical without attempting to evaluate the exposure.

## Does this law apply everywhere?

Prop 65 warnings are required under California law only. These warnings are seen throughout California in a wide range of settings, including but not limited to restaurants, grocery stores, hotels, schools, and hospitals, and on a wide variety of products. Additionally, some online and mail order retailers provide Prop 65 warnings on their websites or in catalogs.

## How do the California warnings compare to federal limits?

Prop 65 standards are often more stringent than federal and international standards. There are various substances that require a Prop 65 warning at levels that are far lower than federal action limits. For example, the Prop 65 standard for warnings for lead is 0.5 µg/day, which is well below the federal and international standards.

## Why don't all similar products carry the warning?

- Products sold in California require Prop 65 labelling while similar products sold elsewhere do not.
- A company involved in a Prop 65 lawsuit reaching a settlement may be required to use Prop 65 warnings for its products, but other companies making similar products may have no such requirement.
- The enforcement of Prop 65 is inconsistent.
- Companies may elect not to provide warnings because they conclude that they are not required to do so under Prop 65; a lack of warnings for a product does not mean that the product is free of listed chemicals at similar levels.

## Why does Toro include this warning?

Toro has chosen to provide consumers with as much information as possible so that they can make informed decisions about the products they buy and use. Toro provides warnings in certain cases based on its knowledge of the presence of one or more listed chemicals without evaluating the level of exposure, as not all the listed chemicals provide exposure limit requirements. While the exposure from Toro products may be negligible or well within the "no significant risk" range, out of an abundance of caution, Toro has elected to provide the Prop 65 warnings. Moreover, if Toro does not provide these warnings, it could be sued by the State of California or by private parties seeking to enforce Prop 65 and subject to substantial penalties.

# EEA/UK Privacy Notice

**Toro's Use of Your Personal Information**

The Toro Company ("Toro") respects your privacy. When you purchase our products, we may collect certain personal information about you, either directly from you or through your local Toro company or dealer. Toro uses this information to fulfil contractual obligations - such as to register your warranty, process your warranty claim or to contact you in the event of a product recall - and for legitimate business purposes - such as to gauge customer satisfaction, improve our products or provide you with product information which may be of interest. Toro may share your information with our subsidiaries, affiliates, dealers or other business partners in connection these activities. We may also disclose personal information when required by law or in connection with the sale, purchase or merger of a business. We will never sell your personal information to any other company for marketing purposes.

**Retention of your Personal Information**

Toro will keep your personal information as long as it is relevant for the above purposes and in accordance with legal requirements. For more information about applicable retention periods please contact legal@toro.com.

**Toro's Commitment to Security**

Your personal information may be processed in the US or another country which may have less strict data protection laws than your country of residence. Whenever we transfer your information outside of your country of residence, we will take legally required steps to ensure that appropriate safeguards are in place to protect your information and to make sure it is treated securely.

**Access and Correction**

You may have the right to correct or review your personal data, or object to or restrict the processing of your data. To do so, please contact us by email at legal@toro.com. If you have concerns about the way in which Toro has handled your information, we encourage you to raise this directly with us. Please note that European residents have the right to complain to your Data Protection Authority.

# The Toro Warranty

Two-Year or 1,500 Hours Limited Warranty

## Conditions and Products Covered

The Toro Company warrants your Toro Commercial product (“Product”) to be free from defects in materials or workmanship for 2 years or 1,500 operational hours*, whichever occurs first. This warranty is applicable to all products with the exception of Aerators (refer to separate warranty statements for these products). Where a warrantable condition exists, we will repair the Product at no cost to you including diagnostics, labor, parts, and transportation. This warranty begins on the date the Product is delivered to the original retail purchaser.
* Product equipped with an hour meter.

## Instructions for Obtaining Warranty Service

You are responsible for notifying the Commercial Products Distributor or Authorized Commercial Products Dealer from whom you purchased the Product as soon as you believe a warrantable condition exists. If you need help locating a Commercial Products Distributor or Authorized Dealer, or if you have questions regarding your warranty rights or responsibilities, you may contact us at:

Toro Commercial Products Service Department
8111 Lyndale Avenue South
Bloomington, MN 55420-1196

952–888–8801 or 800–952–2740
E-mail: commercial.warranty@toro.com

## Owner Responsibilities

As the product owner, you are responsible for required maintenance and adjustments stated in your *Operator's Manual*. Repairs for product issues caused by failure to perform required maintenance and adjustments are not covered under this warranty.

## Items and Conditions Not Covered

Not all product failures or malfunctions that occur during the warranty period are defects in materials or workmanship. This warranty does not cover the following:

- Product failures which result from the use of non-Toro replacement parts, or from installation and use of add-on, or modified non-Toro branded accessories and products.
- Product failures which result from failure to perform recommended maintenance and/or adjustments.
- Product failures which result from operating the Product in an abusive, negligent, or reckless manner.
- Parts consumed through use that are not defective. Examples of parts which are consumed, or used up, during normal Product operation include, but are not limited to, brake pads and linings, clutch linings, blades, reels, rollers and bearings (sealed or greasable), bed knives, spark plugs, castor wheels and bearings, tires, filters, belts, and certain sprayer components such as diaphragms, nozzles, flow meters, and check valves.
- Failures caused by outside influence, including, but not limited to, weather, storage practices, contamination, use of unapproved fuels, coolants, lubricants, additives, fertilizers, water, or chemicals.
- Failure or performance issues due to the use of fuels (e.g. gasoline, diesel, or biodiesel) that do not conform to their respective industry standards.
- Normal noise, vibration, wear and tear, and deterioration. Normal “wear and tear” includes, but is not limited to, damage to seats due to wear or abrasion, worn painted surfaces, scratched decals or windows.

## Parts

Parts scheduled for replacement as required maintenance are warranted for the period of time up to the scheduled replacement time for that part. Parts replaced under this warranty are covered for the duration of the original product warranty and become the property of Toro. Toro will make the final decision whether to repair any existing part or assembly or replace it. Toro may use remanufactured parts for warranty repairs.

## Deep Cycle and Lithium-Ion Battery Warranty

Deep cycle and Lithium-Ion batteries have a specified total number of kilowatt-hours they can deliver during their lifetime. Operating, recharging, and maintenance techniques can extend or reduce total battery life. As the batteries in this product are consumed, the amount of useful work between charging intervals will slowly decrease until the battery is completely worn out. Replacement of worn out batteries, due to normal consumption, is the responsibility of the product owner. Note: (Lithium-Ion battery only): Refer to the battery warranty for additional information.

## Lifetime Crankshaft Warranty (ProStripe 02657 Model Only)

The Prostripe which is fitted with a genuine Toro Friction Disc and Crank-Safe Blade Brake Clutch (integrated Blade Brake Clutch (BBC) + Friction Disc assembly) as original equipment and used by the original purchaser in accordance with recommended operating and maintenance procedures, are covered by a Lifetime Warranty against engine crankshaft bending. Machines fitted with friction washers, Blade Brake Clutch (BBC) units and other such devices are not covered by the Lifetime Crankshaft Warranty.

## Maintenance is at Owner’s Expense

Engine tune-up, lubrication, cleaning and polishing, replacement of filters, coolant, and completing recommended maintenance are some of the normal services Toro products require that are at the owner’s expense.

## General Conditions

Repair by an Authorized Toro Distributor or Dealer is your sole remedy under this warranty.

**The Toro Company is not liable for indirect, incidental or consequential damages in connection with the use of the Toro Products covered by this warranty, including any cost or expense of providing substitute equipment or service during reasonable periods of malfunction or non-use pending completion of repairs under this warranty. Except for the Emissions warranty referenced below, if applicable, there is no other express warranty. All implied warranties of merchantability and fitness for use are limited to the duration of this express warranty.**

Some states do not allow exclusions of incidental or consequential damages, or limitations on how long an implied warranty lasts, so the above exclusions and limitations may not apply to you. This warranty gives you specific legal rights, and you may also have other rights which vary from state to state.

## Note Regarding Emissions Warranty

The Emissions Control System on your Product may be covered by a separate warranty meeting requirements established by the U.S. Environmental Protection Agency (EPA) and/or the California Air Resources Board (CARB). The hour limitations set forth above do not apply to the Emissions Control System Warranty. Refer to the Engine Emission Control Warranty Statement supplied with your product or contained in the engine manufacturer’s documentation.

## Countries Other than the United States or Canada

Customers who have purchased Toro products exported from the United States or Canada should contact their Toro Distributor (Dealer) to obtain guarantee policies for your country, province, or state. If for any reason you are dissatisfied with your Distributor's service or have difficulty obtaining guarantee information, contact your Authorized Toro Service Center.




**Count on it.**