Form No. 3451-999 Rev A

TORO®

Count on it.

Parts Catalog

Groundsmaster® 3200

All-Wheel Drive Traction Unit

Model No. 31901—Serial No. 410500000 and Up

Register at www.Toro.com.
Original Instructions (EN)

CE

3451-999 A

Ordering Replacement Parts

To order replacement parts, please supply the part number, the quantity, and the description of each part desired.

Understanding Reference Numbers

Each identified part in an illustration has a reference number. The reference number for a part also appears in the parts list, along with other information about the part.

This catalog uses two special reference number formats, one to indicate parts in a service assembly and another to indicate the quantity of a given part in an illustration.

Service Assembly Reference Numbers

Parts in service assemblies have reference numbers in the form a:b. The a represents the reference number of the entire service assembly and the b represents a sequential number unique to each part within the service assembly.

For example, a wheel assembly might be identified by reference number 6, the tire by 6:1, the valve by 6:2, and the wheel by 6:3. When you order the assembly identified by reference number 6, you receive all parts identified by reference numbers 6:1,6:2, and 6:3. However, you may also order any part individually. Reference numbers of this type appear in illustration and in parts lists.

Reference Numbers Indicating Quantity

In an illustration, if a reference number indicates more than one part, the reference number has the form nX y. The n represents the quantity of the part, the X is the multiplication symbol, and the y represents the reference number.

For example, in an illustration, the reference number 2X 37 means that two of the parts identified by reference number 37 are indicated.

Contents

Frame and Roll-Over Protection System Assembly . . . 4
LH Lift Arm Assembly No. 138-7419SP . . . 6
RH Lift Arm Assembly No. 138-7429SP . . . 7
Tie Rod Assembly No. 133-6462 . . . 8
Bumper and Weight Assembly . . . 9
Front Axle and Parking Brake Assembly . . . 10
Left Hand Brake Assembly No. 120-0235 . . . 12
Right Hand Brake Assembly No. 120-0233 . . . 13
Hydraulic Drive Assembly . . . 14
Hydraulic Motor Assembly No. 138-0435 . . . 15
Hydraulic Motor Assembly No. 138-0436 . . . 16
Hydraulic Motor Assembly No. 137-2479 . . . 17
Hydraulic Motor Assembly No. 137-2459 . . . 18
Steer/Lift Manifold Assembly No. 138-4489 . . . 19
Engine, Air Cleaner and Exhuast Assembly . . . 21
Air Cleaner Assembly No. 93-2190 . . . 23
Radiator and Cooler Assembly . . . 24
Fuel and Hydraulic Tank Assembly . . . 25
Fuel Tank Assembly No. 138-0291 . . . 27
Hydraulic Tank Assembly No. 138-4418 . . . 28
Platform, Steering and Console Assembly . . . 29
Steering Column Assembly No. 139-0857 . . . 31
Traction Pedal Assembly . . . 32
Control Console Assembly . . . 33
Hood Assembly . . . 34
Hydraulic PTO Assembly . . . 35
Variable Piston Pump Assembly No. 138-0305 . . . 36
Driveshaft Assembly No. 144-0521SP . . . 38
Hydraulic Assembly . . . 39
Gear Pump Assembly No. 138-0321 . . . 42
Steering Valve Assembly No. 114-8119 . . . 43
Traction Hydraulic Assembly . . . 44
Electrical Assembly . . . 45
Wire Harness Assembly No. 122-1657 . . . 47
Cylinder Block Assembly . . . 48
Gear Housing Assembly . . . 50
Mounting Flange and Oil Sump Assembly . . . 52
Cylinder Head and Cover Assembly . . . 54
Exhaust Manifold Assembly . . . 56
Camshaft and Driving Gear Assembly . . . 58
Crankshaft and Piston Assembly . . . 60
Lubrication and Oil System Assembly . . . 62
Cooling Water System Assembly . . . 64
Fuel Injection Pump Assembly . . . 66
Governor Assembly . . . 68
Fuel Injection Valve Assembly . . . 70
Fuel Pipe Assembly . . . 72
Starter Motor Assembly . . . 74
Generator Assembly . . . 76
Accessory Assembly . . . 78
Gasket Set . . . 80
Attachments and Accessories . . . 82

© 2022—The Toro® Company

8111 Lyndale Avenue South
Bloomington, MN 55420

Contact us at www.Toro.com.
Printed in the USA.

All Rights Reserved

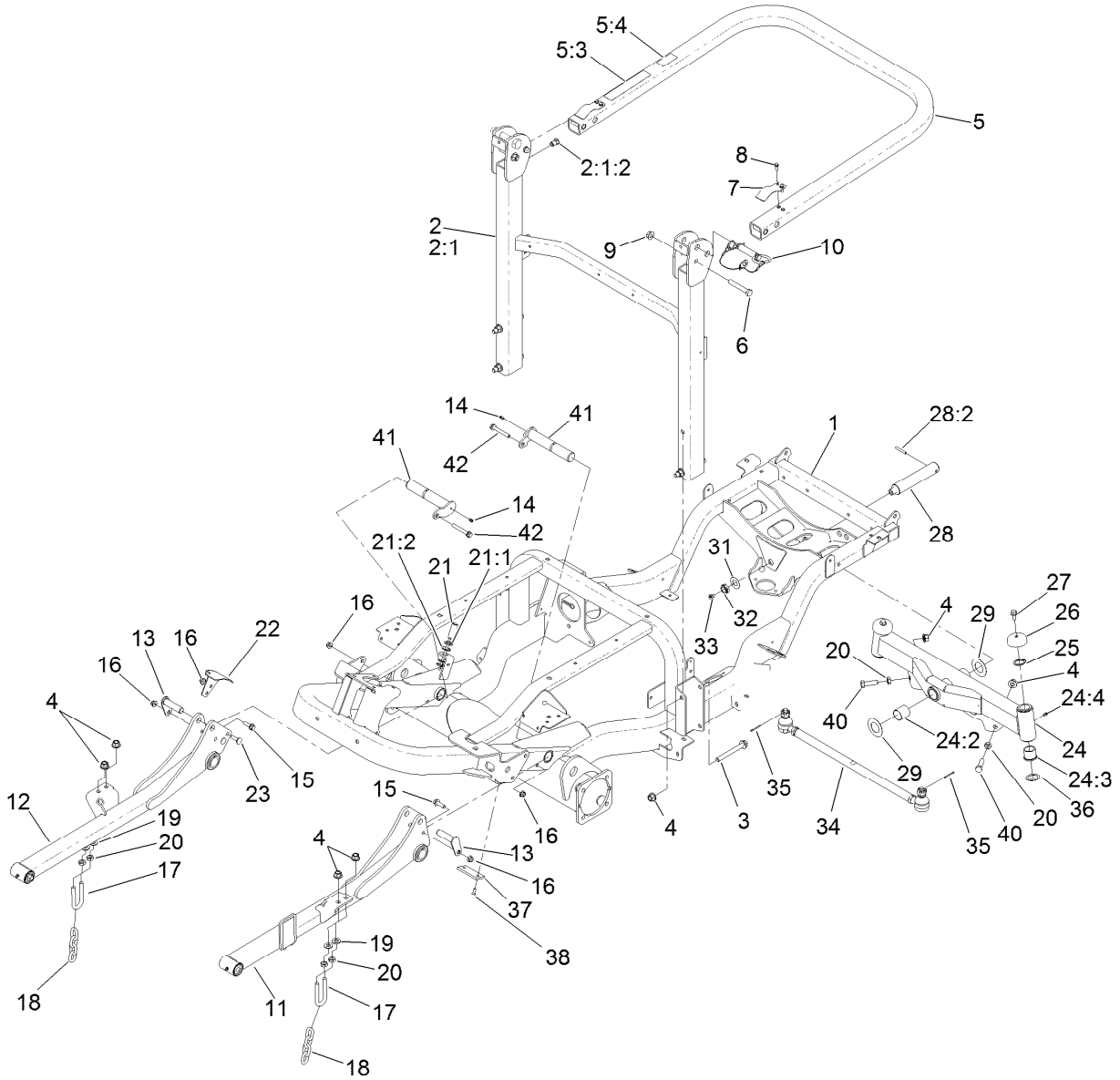

Frame and Roll-Over Protection System Assembly

Ref.	Part Number	Qty.	Description
1	133-6450SP	1	Frame ASM
2	139-6254SP	1	ROPS ASM, Lower
2:1		1	ROPS ASM, Lower ●
2:1:2	138-2760	4	Nut-Clinch, Hex
3	117-3176	4	Screw-HHF
4	99-5107	10	Nut-Lock
5	138-7470	1	ROPS ASM, Upper
5:3	108-2073	1	Decal-Warning
5:4	139-6244	1	Decal-ROPS Compliance
6	325-13	2	Screw-HH
7	110-5696	2	Spring-Leaf
8	32105-15	4	Screw-HWH
9	32128-23	2	Nut-HF
10	103-4553	2	Pin-Fold, ROPS
11	138-7419SP	1	LH Lift Arm ASM
12	138-7429SP	1	RH Lift Arm ASM
13	138-7489	2	Pin (Machined)
14	302-5	2	Fitting-Grease

Ref.	Part Number	Qty.	Description
15	119-4061	2	Screw-HHF
16	104-8301	6	Nut-HF, NI
17	104-0108	2	U-Bolt
18	95-6231	2	Chain-HOC
19	3256-26	4	Washer-Flat
20	3218-5	6	Nut-Jam
21	115-5300	1	Proximity Switch ASM
21:1	117-3207	2	Nut-Hex
21:2	117-3208	2	Washer-Lock, Internal Tooth
22	139-6170-0P	1	Bracket-Sensor Mount [primed]
23	3231-2	2	Bolt-CARR
24	138-4588	1	Axle ASM
24:2	99-6964	2	Bushing-Axle
24:3	104-0015	4	Bushing-Flange
24:4	302-5	2	Fitting-Grease
25	32151-77	2	Ring-Retaining, External
26	69-8890	2	Cap-Spindle

● Not serviced separately

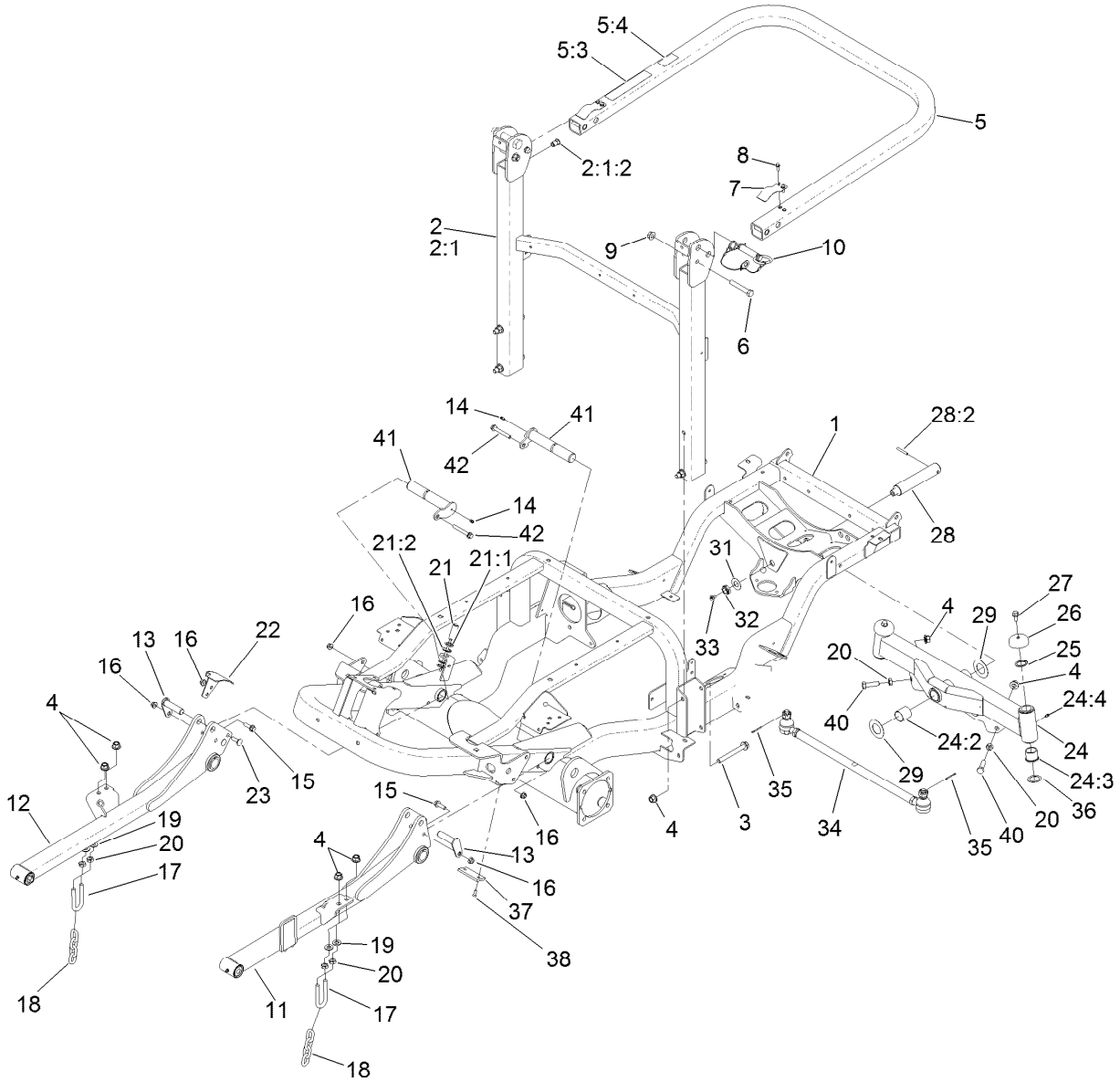

Frame and Roll-Over Protection System Assembly (continued)

Ref.	Part Number	Qty.	Description
27	3234-1	2	Screw-HHF
28	140-6101	1	Pin ASM-Axle Pivot
28:2	32121-32	1	Pin-Roll
29	99-8432	2	Washer-Thrust
31	71-4540	1	Washer-Thrust
32	3296-15	1	Nut-Lock, NI
33	302-33	1	Fitting-Grease
34	133-6462	1	Tie Rod ASM

Ref.	Part Number	Qty.	Description
35	3272-12	2	Pin-Cotter
36	76-2980	2	Washer-Thrust
37	138-4452	2	Pad-Stop, Deck
38	3289-4	4	Screw-FH
40	325-7	2	Screw-HH
41	138-4593	2	Pin
42	133-9682	2	Screw-Hfh

● Not serviced separately

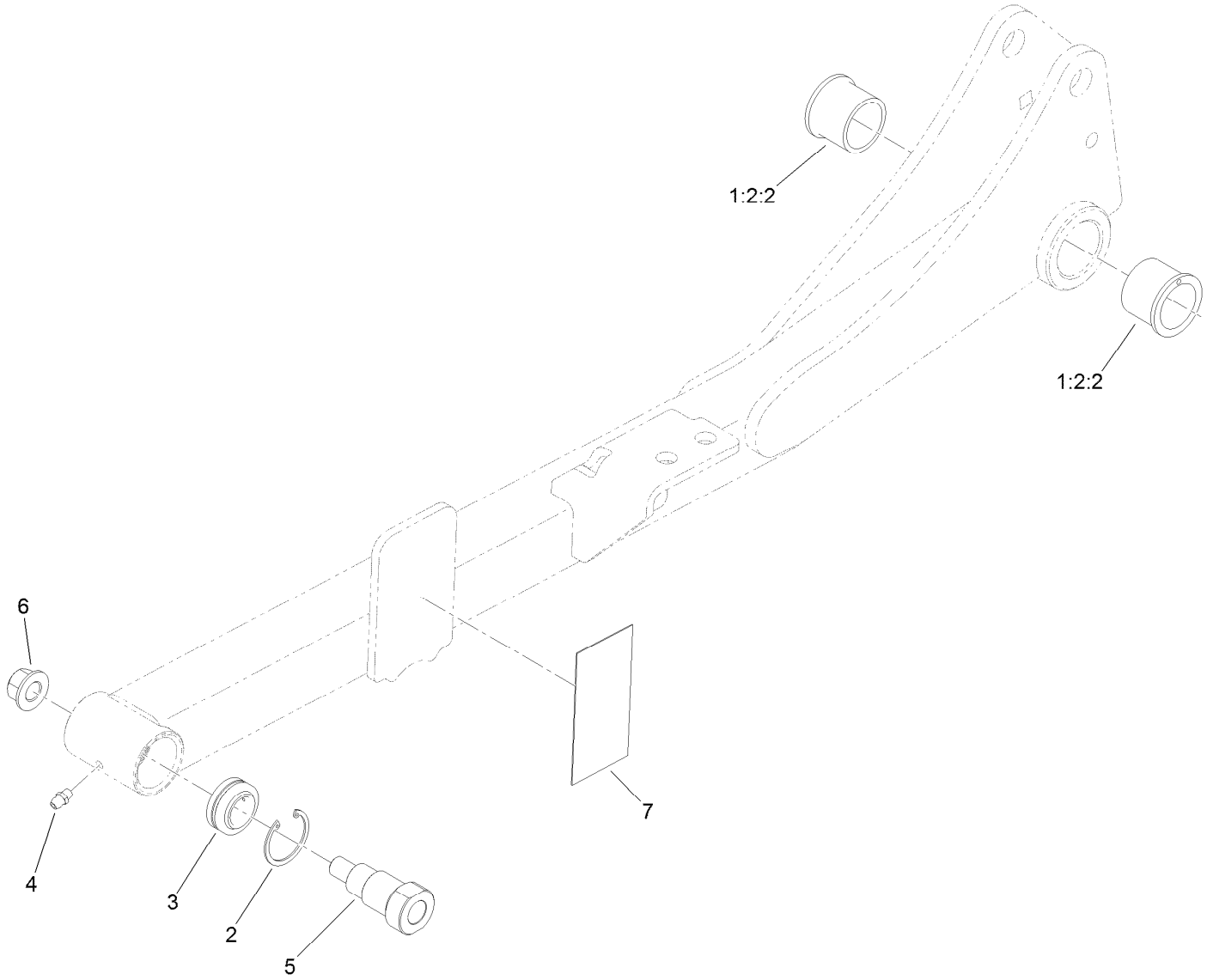

LH Lift Arm Assembly No. 138-7419SP

Ref.	*Part Number*	*Qty.*	*Description*
1:2:2	104-0015	2	Bushing-Flange
2	32151-34	1	Ring-Retaining
3	105-7441	1	Bearing-Spherical
4	302-5	1	Fitting-Grease
5	139-0910	1	Bolt-Shoulder
6	99-5107	1	Nut-Lock
7	139-0948	1	Pad-Ride, Pin

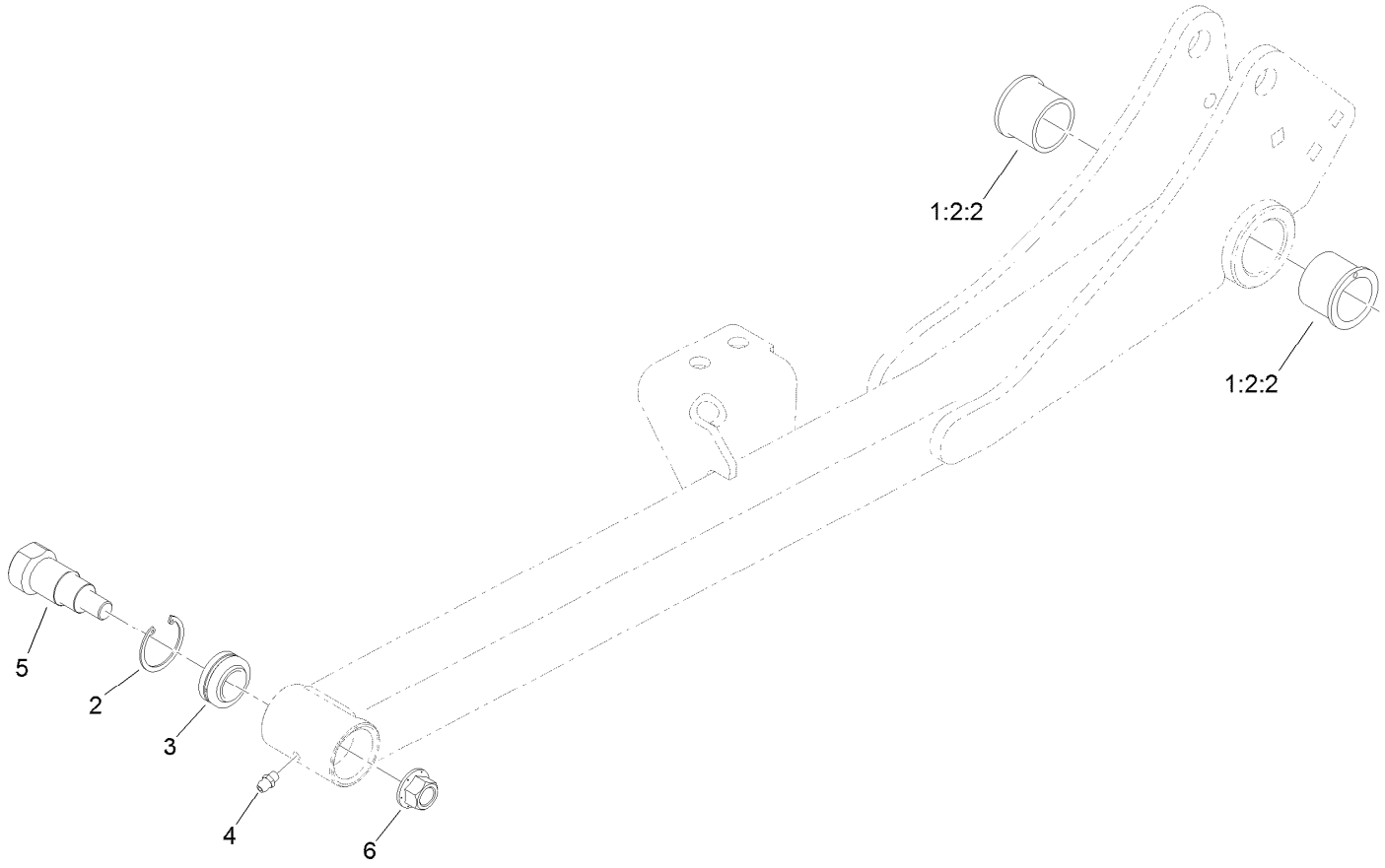

RH Lift Arm Assembly No. 138-7429SP

Ref.	*Part Number*	*Qty.*	*Description*
1:2:2	104-0015	2	Bushing-Flange
2	32151-34	1	Ring-Retaining
3	105-7441	1	Bearing-Spherical
4	302-5	1	Fitting-Grease
5	139-0910	1	Bolt-Shoulder
6	99-5107	1	Nut-Lock

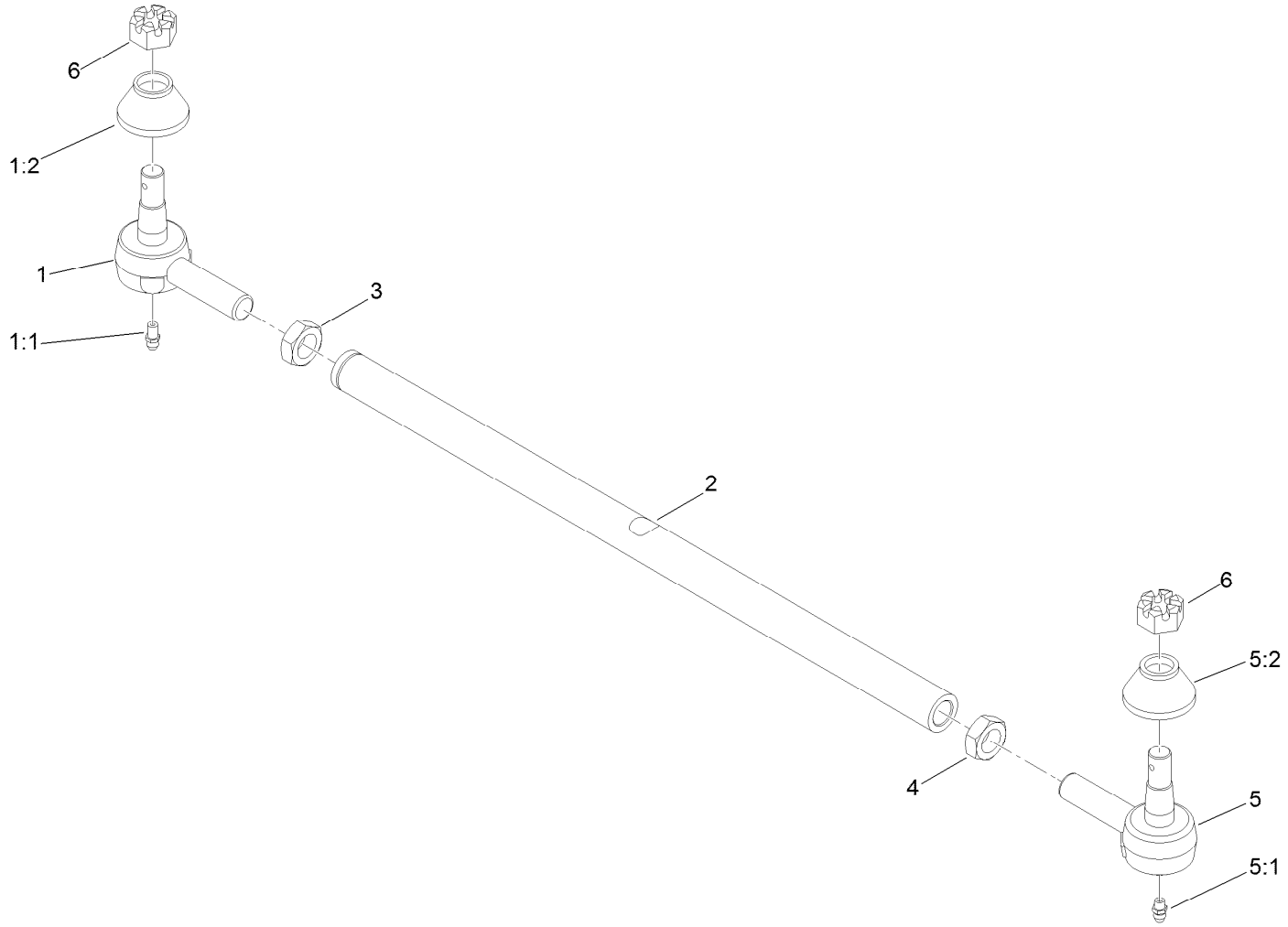

Tie Rod Assembly No. 133-6462

Ref.	*Part Number*	*Qty.*	*Description*
1	139-6199	1	Tie Rod End
1:1	302-5	1	Fitting-Grease
1:2	105-7835	1	Seal
2	133-6463	1	Tie-Rod
3	84-5300	1	Nut-Jam
4	110-5337	1	Nut-Jam
5	139-6200	1	Tie Rod End
5:1	302-5	1	Fitting-Grease
5:2	105-7835	1	Seal
6	140-6135	2	Nut-Hex, Slotted

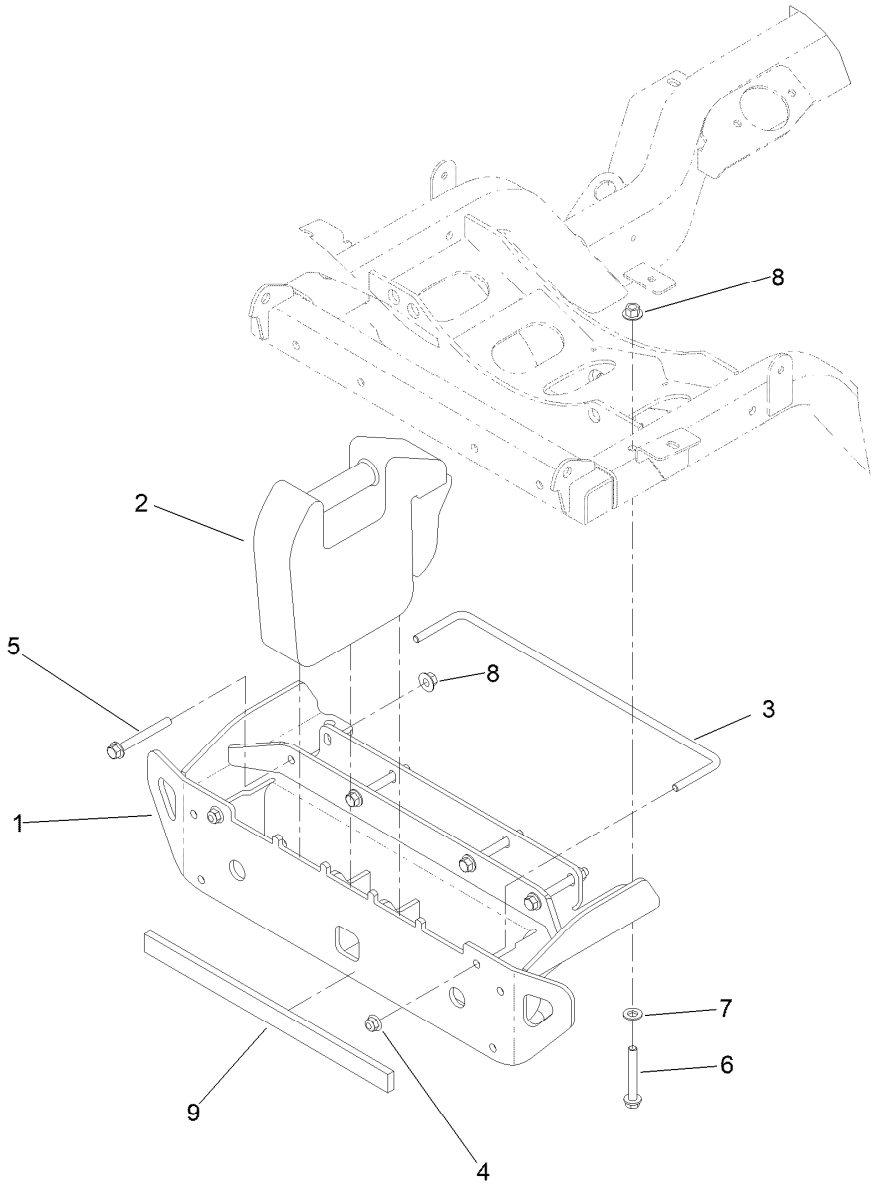

Bumper and Weight Assembly

Ref.	*Part Number*	*Qty.*	*Description*
1	139-2328SP	1	Rear Bumper
2	114-4096	1	Weight
3	125-2667	1	Lock-Weight
4	104-8301	2	Nut-HF, NI
5	3234-41	4	Screw-HHF
6	139-2429	2	Screw-HHF
7	3256-24	2	Washer-Flat
8	32128-43	6	Nut-Flange
9	144-0553	1	Strip-Rubber

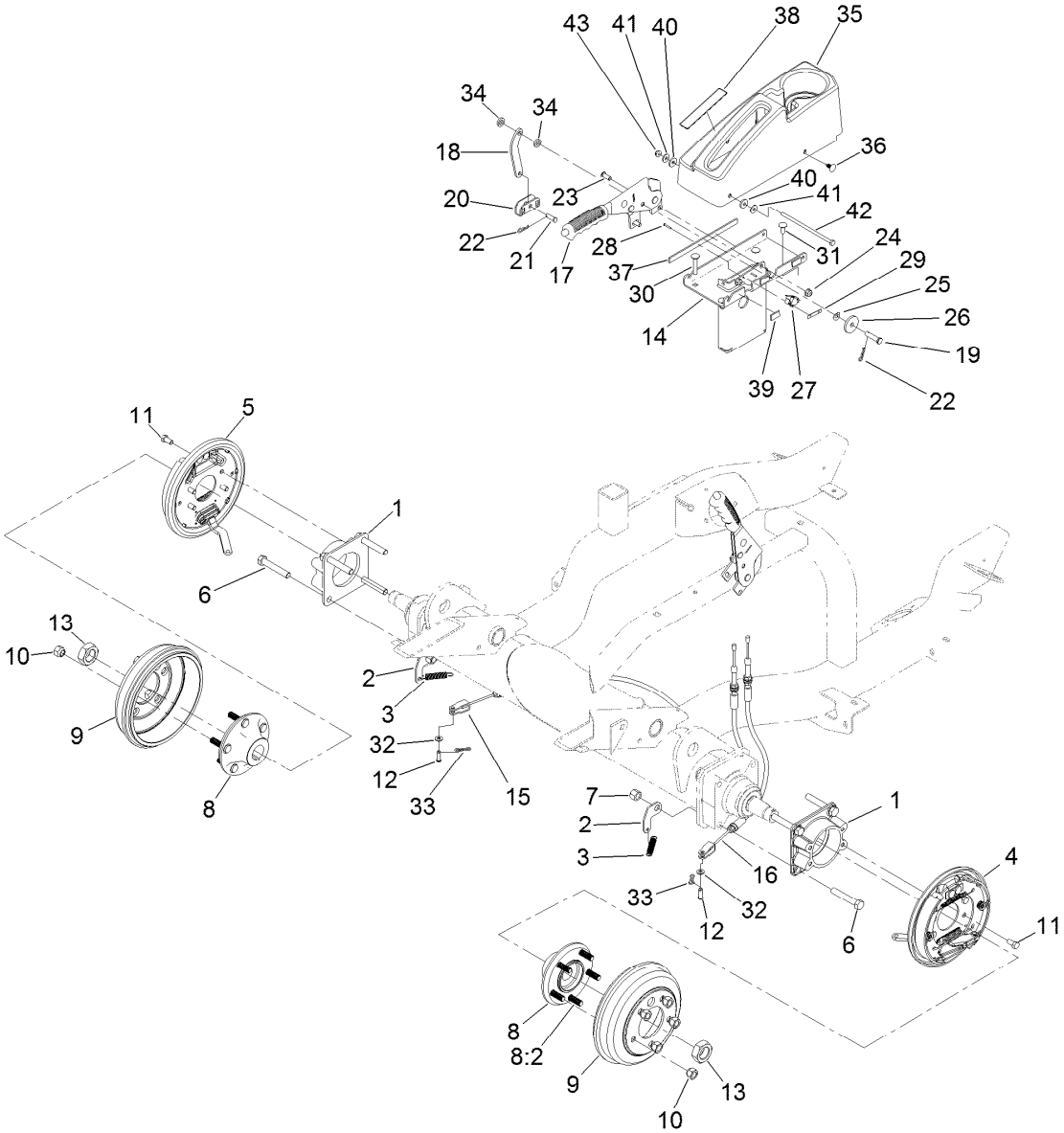

Front Axle and Parking Brake Assembly

Ref.	Part Number	Qty.	Description
1	120-6253-03	2	Adapter-Brake
2	138-4499	2	Clip-Spring
3	137-2591	2	Spring-Extension
4	120-0235	1	LH Brake ASM
5	120-0233	1	RH Brake ASM
6	325-12	8	Screw-HH
7	3296-23	8	Nut-Lock, NI
8	137-2470	2	Hub ASM
8:2	114-3918	5	Stud-Wheel
9	114-8864	2	Drum-Brake
10	242-50	10	Nut-Lug
11	323-4	8	Screw-HH
12	283-58	2	Pin-Clevis
13	107-9319	2	Nut-Hex
14	144-0517-0P	1	Parking Brake Mount [primed]
15	137-2640	1	Cable-Brake, Adjustable RH
16	137-2641	1	Cable-Brake, Adjustable LH
17	131-8320	1	Lever-Brake, Park
18	144-0516	1	Link-Park, Brake
19	283-10	1	Pin-Clevis

Ref.	Part Number	Qty.	Description
20	87-3480	1	Bracket-Equalizer, Cable
21	1-808280	1	Pin-Clevis
22	1-806003	2	Pin-Cotter
23	3274-55	2	Screw-HSBH
24	104-8300	6	Nut-HF, NI
25	121-4605	1	Washer-Spring
26	131-8496	1	Washer-Plain
27	108-6496	1	Switch (W/Boot)
28	95-3003	2	Screw-PPHTF
29	3290-354	1	Nut-Speed
30	116-0629	2	Screw-CARR
31	3230-23	2	Bolt-CARR
32	3256-74	2	Washer-Flat
33	119-1415	2	Pin-Cotter, Locking
34	3-3287	2	Spacer
35	138-7475	1	Cover-Brake, Parking
36	117-2382	2	Plug-Plastic
37	132-7282	1	Strip-Foam
38	139-6224	1	Decal-Brake, Parking
39	115-5417	3	Strip-Foam
40	144-0499	2	Washer-Epdm

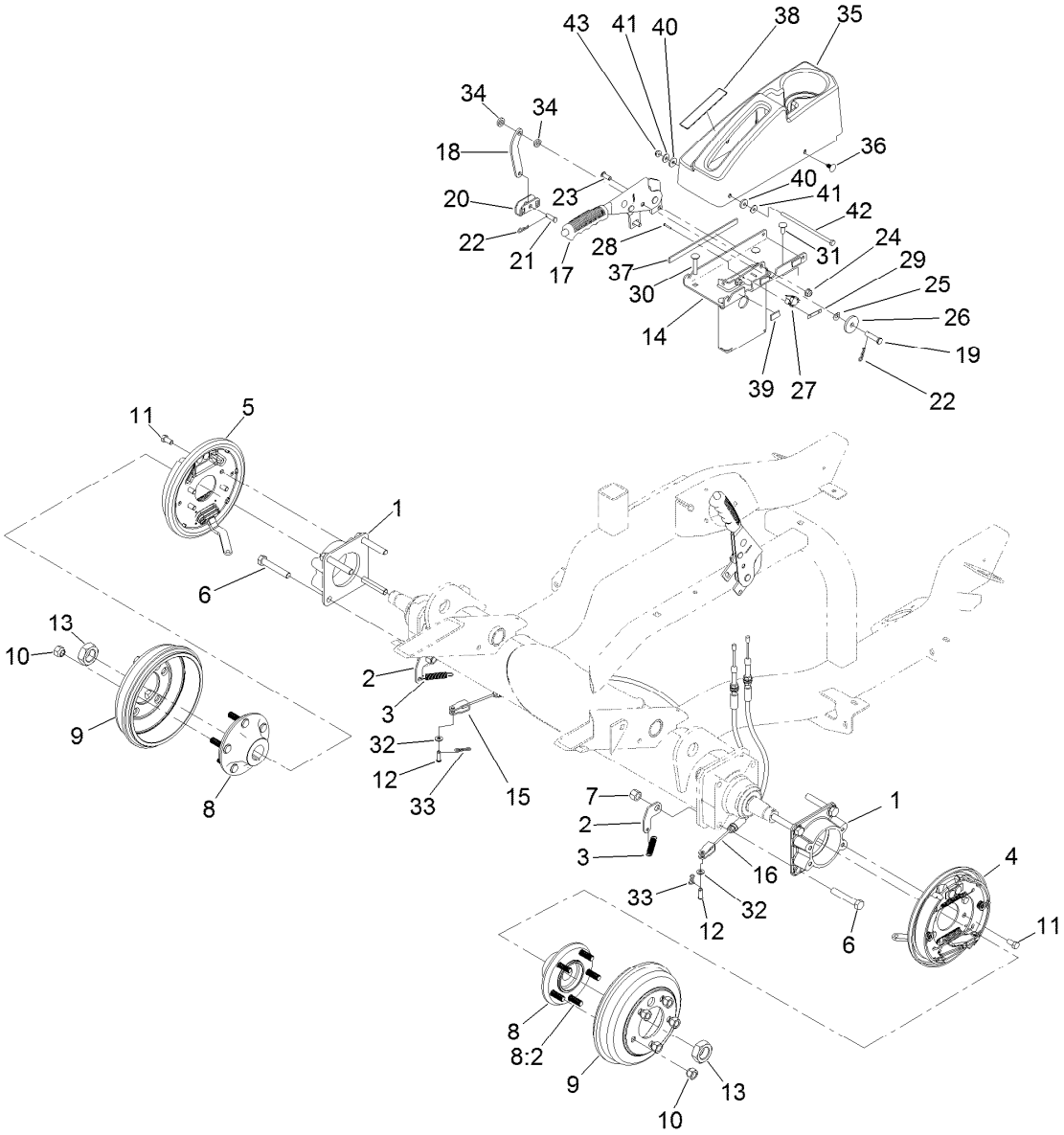

Front Axle and Parking Brake Assembly (continued)

Ref.	Part Number	Qty.	Description
41	3256-78	2	Washer-Flat
42	321-21	1	Screw-HH
43	104-7201	1	Nut-HF, NI

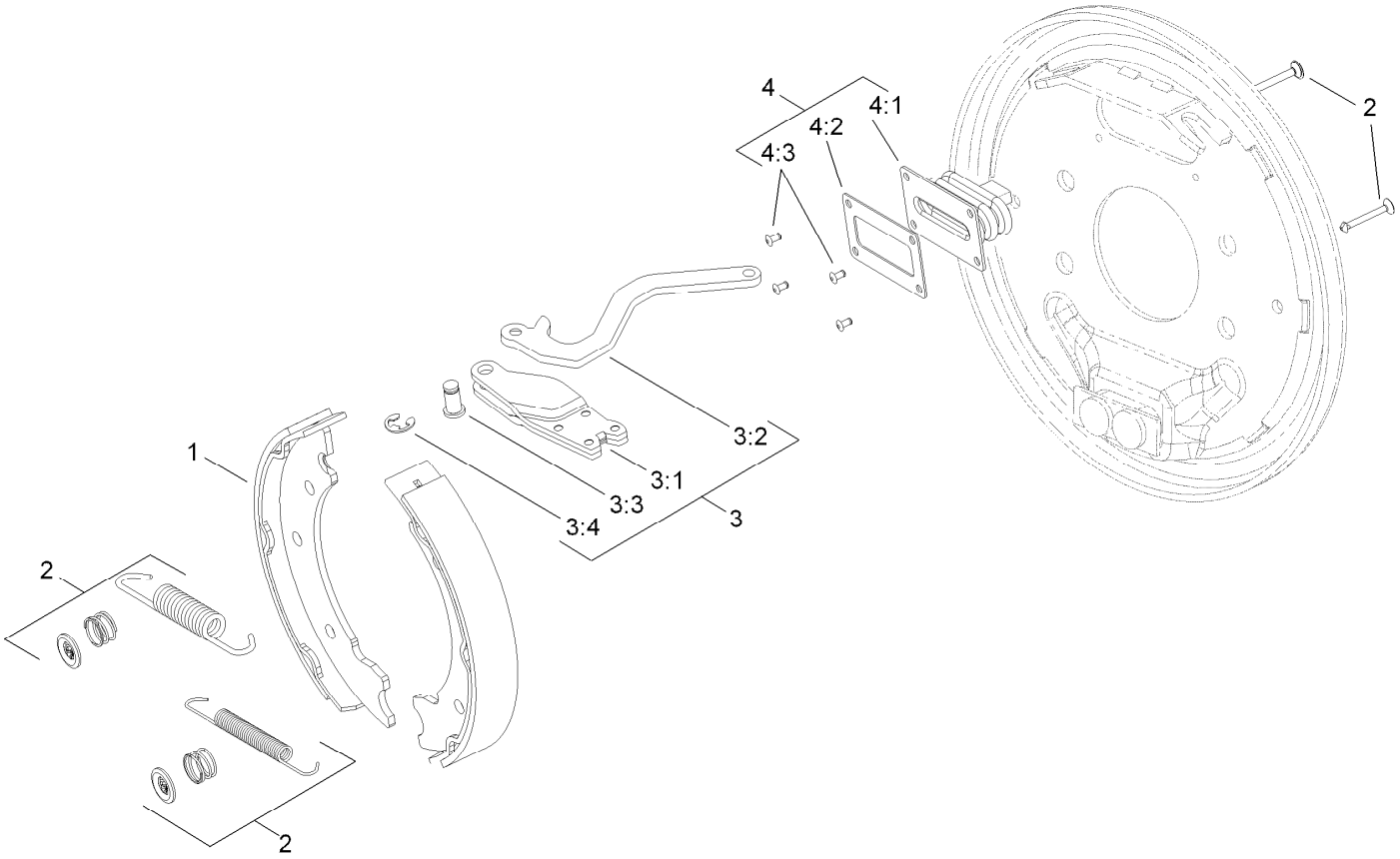

Left Hand Brake Assembly No. 120-0235

Ref.	*Part Number*	*Qty.*	*Description*
1	139-5950	1	Brake Shoe Kit
2	108-6983	1	Brake Hardware Kit
3	120-0236	1	LH Actuator Kit
3:1		1	Housing ●
3:2		1	Lever-LH ●
3:3		1	Pin-Pivot ●
3:4		1	E-Ring ●
4	110-8885	1	Dust Boot Kit
4:1		1	Boot ●
4:2		1	Plate-Back Up ●
4:3		2	Rivet ●

● Not serviced separately

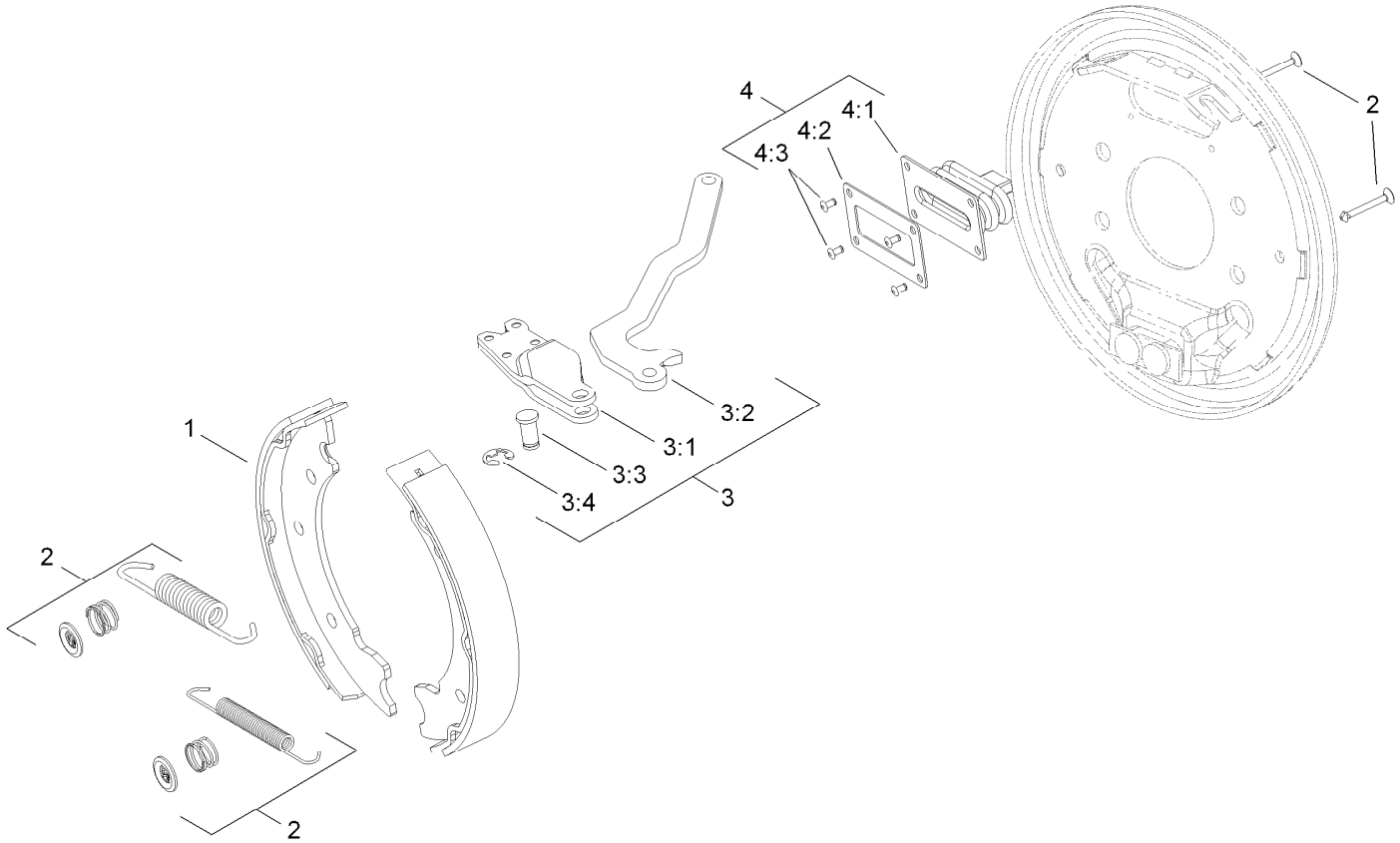

Right Hand Brake Assembly No. 120-0233

Ref.	*Part Number*	*Qty.*	*Description*
1	139-5950	1	Brake Shoe Kit
2	108-6983	1	Brake Hardware Kit
3	120-0234	1	RH Actuator Kit
3:1		1	Housing ●
3:2		1	Lever-RH ●
3:3		1	Pin-Pivot ●
3:4		1	E-Ring ●
4	110-8885	1	Dust Boot Kit
4:1		1	Boot ●
4:2		1	Plate-Back Up ●
4:3		2	Rivet ●

● Not serviced separately

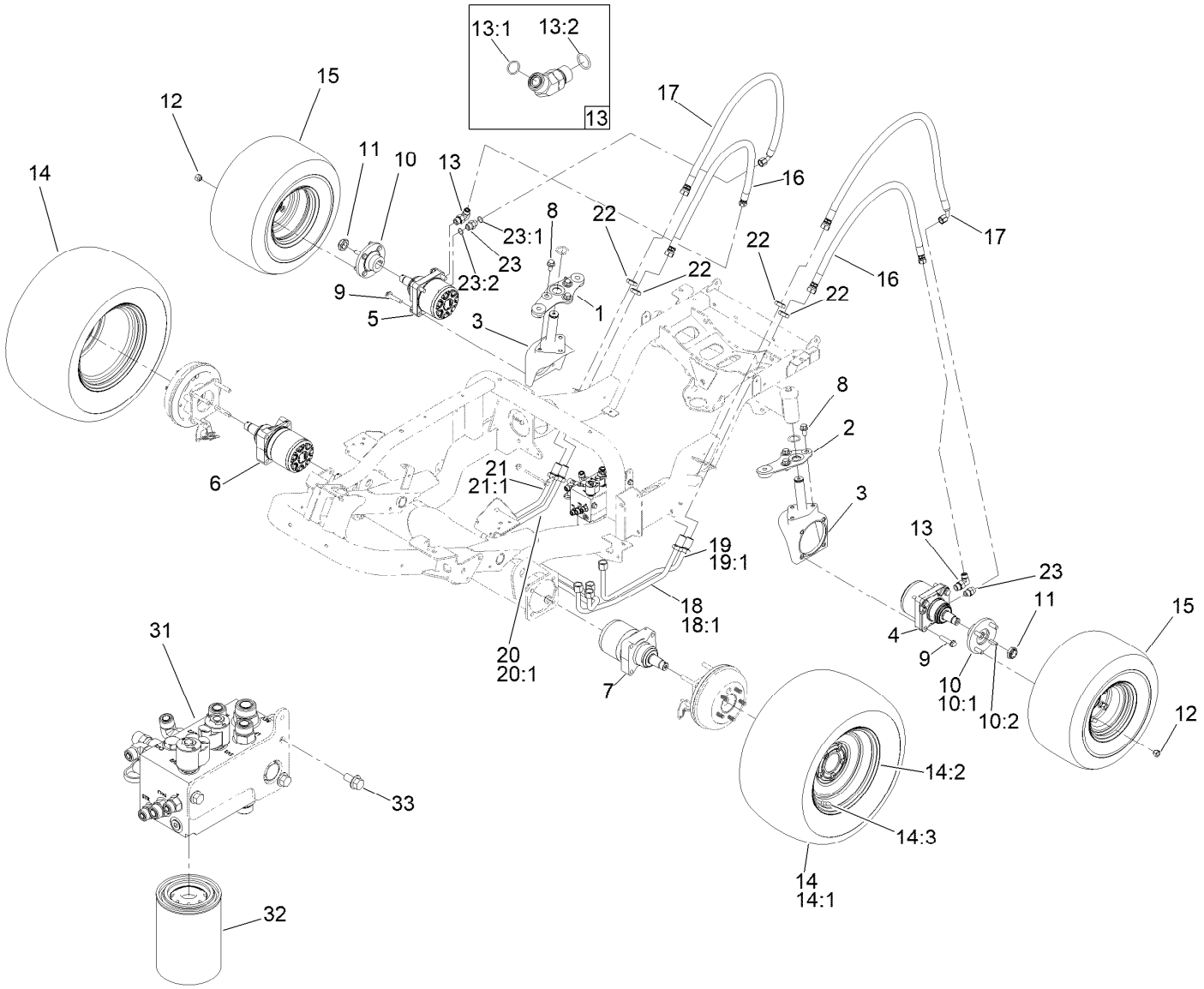

Hydraulic Drive Assembly

Ref.	Part Number	Qty.	Description
1	140-3142	1	Link-Drag, RH
2	140-3144	1	Link-Drag, LH
3	107-4517-03	2	Housing-Motor
4	138-0435	1	Motor-Hydraulic, CCW
5	138-0436	1	Motor-Hydraulic, CW
6	137-2479	1	Motor-Hydraulic, CW
7	137-2459	1	Motor-Hydraulic, CCW
8	3234-38	6	Screw-HHF
9	3234-46	8	Screw-HHF
10	18-3209	2	Wheel Hub/Stud ASM
10:1	10-6870-03	1	Hub-Wheel
10:2	10-6830	4	Stud-Type, Drive
11	116-1399	2	Locknut
12	242-50	8	Nut-Lug
13	340-105	2	Fitting-Elbow, 90 DEG
13:1	237-80	1	O-Ring
13:2	237-30	1	O-Ring
14	137-2593	2	Wheel ASM
14:1	137-2595	1	Rim
14:2	137-2581	1	Tire

Ref.	Part Number	Qty.	Description
14:3	232-27	1	Stem-Valve
15	137-2592	2	Wheel ASM
16	144-3929	2	Hose ASM, Hydraulic
17	144-3928	2	Hose ASM, Hydraulic
18	138-0334	1	Hydraulic Tube ASM
18:1	237-65	1	O-Ring
19	138-0335	1	Hydraulic Tube ASM
19:1	237-65	1	O-Ring
20	138-0337	1	Hydraulic Tube ASM
20:1	237-65	1	O-Ring
21	138-0338	1	Hydraulic Tube ASM
21:1	237-65	1	O-Ring
22	340-74	4	Nut-Lock, Bulkhead
23	340-6	2	Fitting-Straight
23:1	237-30	1	O-Ring
23:2	237-80	1	O-Ring
31	138-4489	1	Manifold-Steering/Lift
32	86-3010	1	Filter-Oil
33	3234-1	3	Screw-HHF

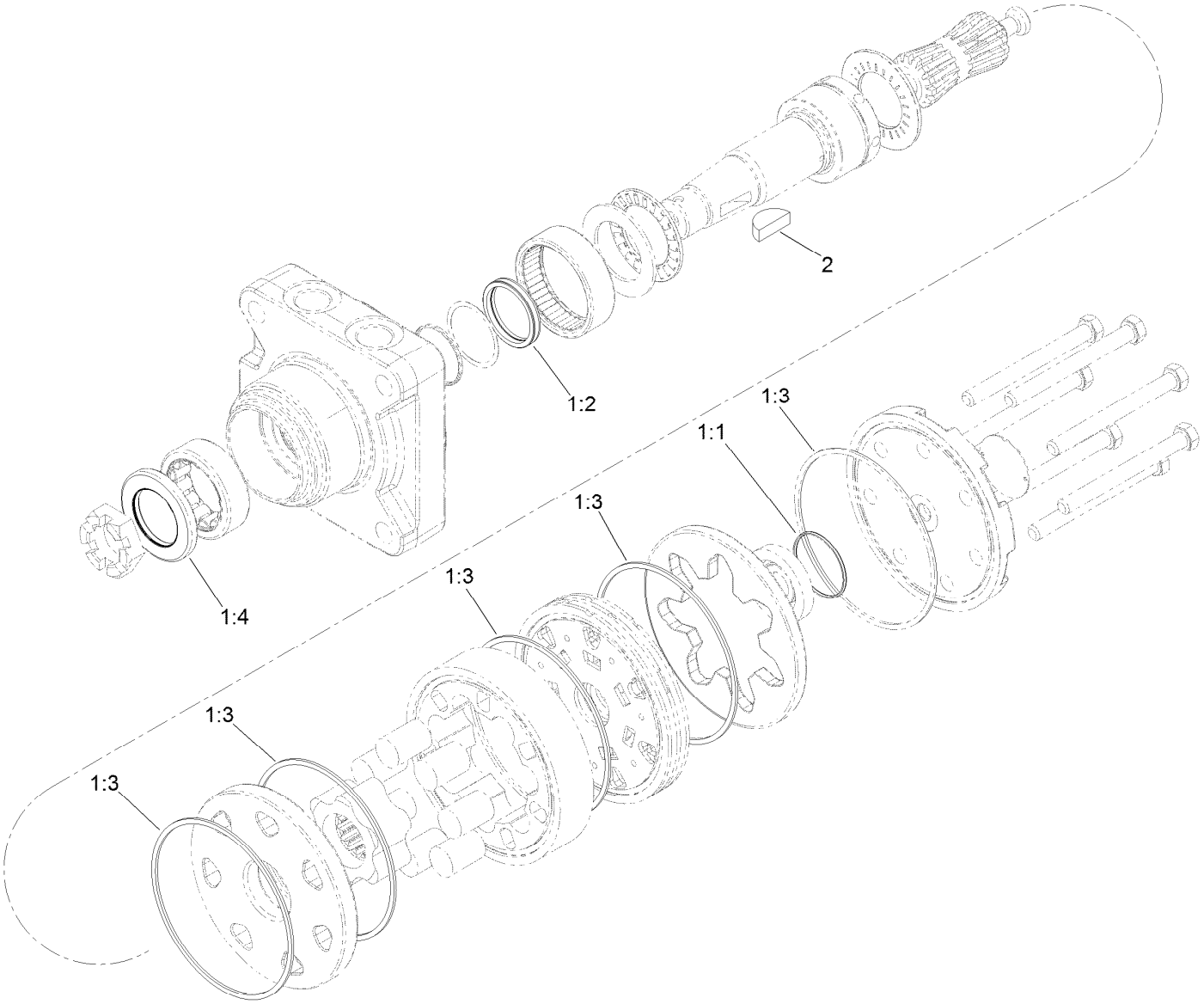

Hydraulic Motor Assembly No. 138-0435

Ref.	*Part Number*	*Qty.*	*Description*
1	110-8897	1	Seal Kit ●
1:1		1	Seal-Commutator, Vespel ■
1:2		1	Seal-Shaft ■
1:3		5	Seal-Body, Buna ■
1:4		1	Seal-Dirt / Water ■
2	3257-42	1	Key-Woodruff

● Not illustrated

■ Not serviced separately

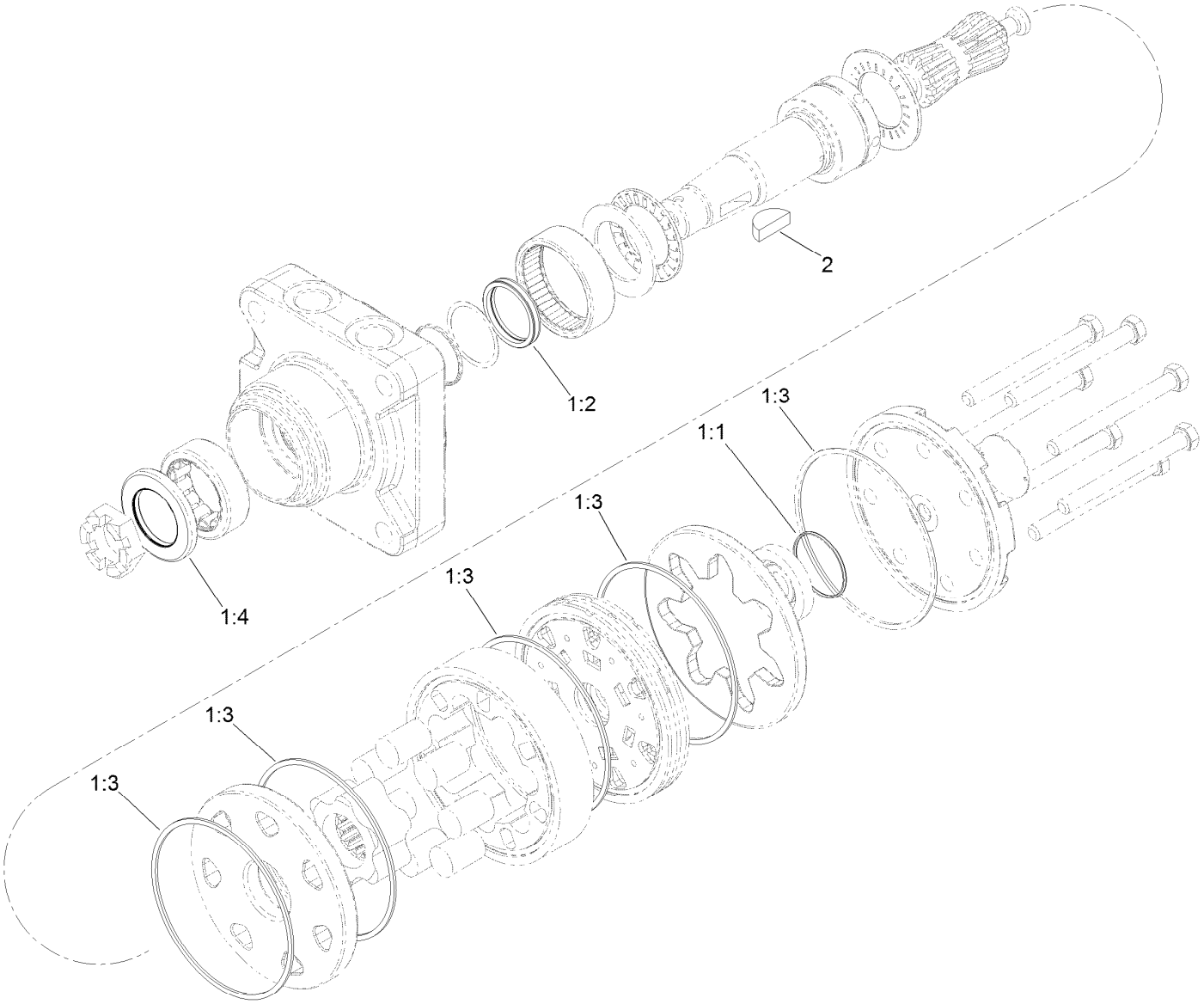

Hydraulic Motor Assembly No. 138-0436

Ref.	*Part Number*	*Qty.*	*Description*
1	110-8897	1	Seal Kit ●
1:1		1	Seal-Commutator, Vespel ■
1:2		1	Seal-Shaft ■
1:3		5	Seal-Body, Buna ■
1:4		1	Seal-Dirt / Water ■
2	3257-42	1	Key-Woodruff

● Not illustrated

■ Not serviced separately

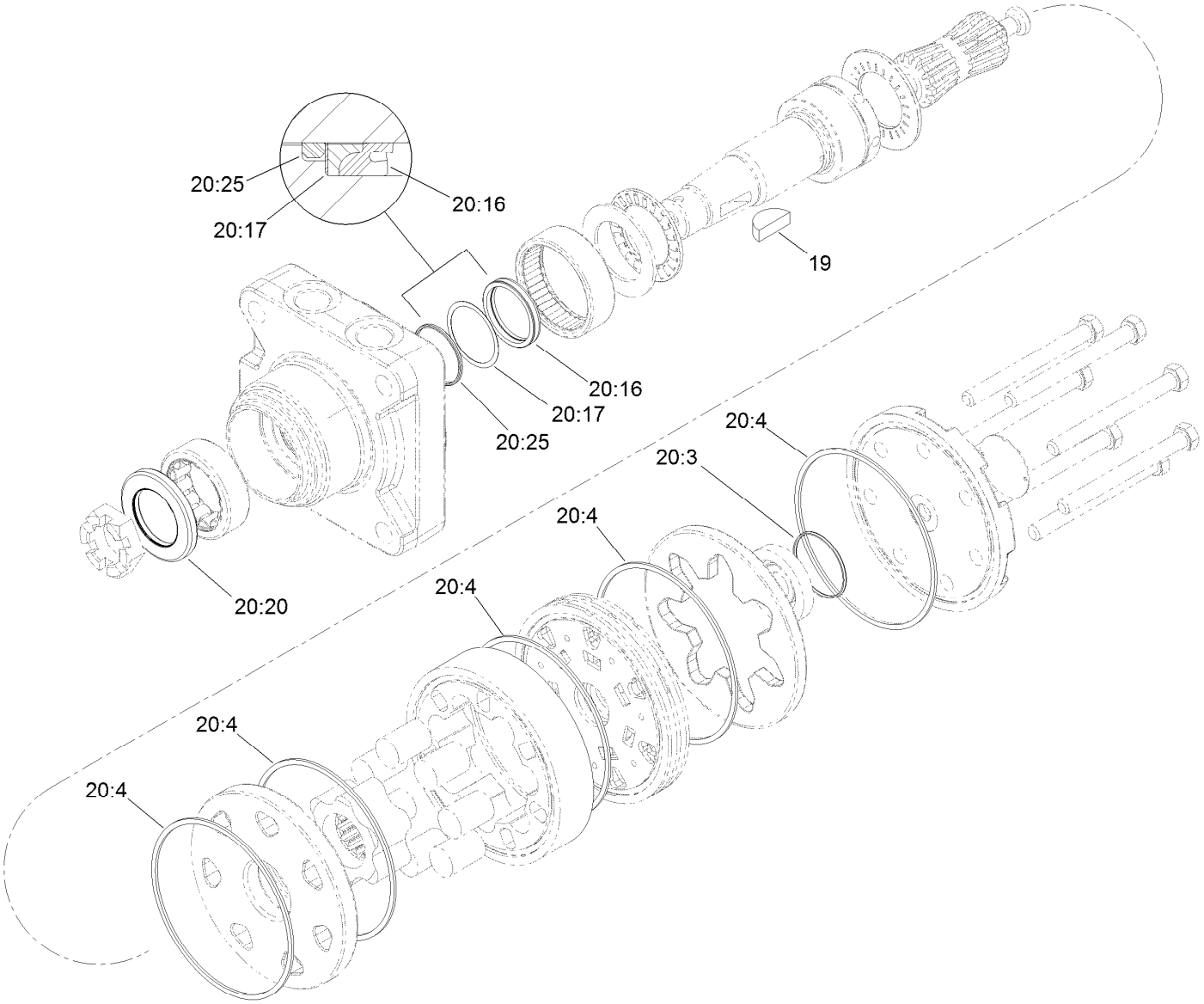

Hydraulic Motor Assembly No. 137-2479

Ref.	Part Number	Qty.	Description
19	3257-42	1	Key-Woodruff
20	110-8896	1	Seal Kit ●
20:3		1	Seal-Commutator, Vespel ■
20:4		6	Seal-Body, Buna ■
20:16		1	Seal-Shaft ■
20:17		1	Washer-Back Up ■
20:20		1	Seal-Dirt/Water ■
20:25		1	Ring-Back Up ■

● Not illustrated

■ Not serviced separately

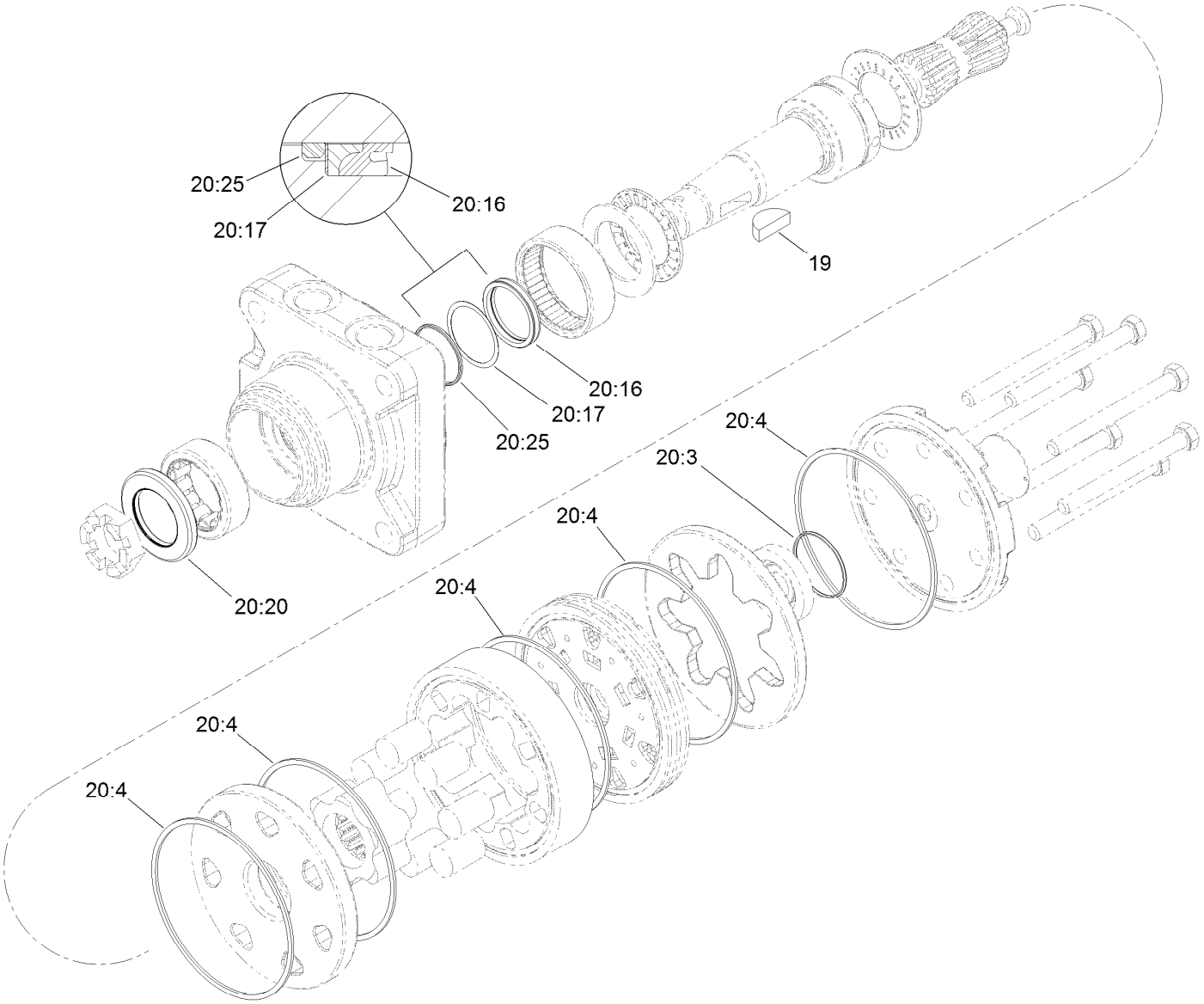

Hydraulic Motor Assembly No. 137-2459

Ref.	*Part Number*	*Qty.*	*Description*
19	3257-42	1	Key-Woodruff
20	110-8896	1	Seal Kit ●
20:3		1	Seal-Commutator, Vespel ■
20:4		6	Seal-Body, Buna ■
20:16		1	Seal-Shaft ■
20:17		1	Washer-Back Up ■
20:20		1	Seal-Dirt/Water ■
20:25		1	Ring-Back Up ■

● Not illustrated

■ Not serviced separately

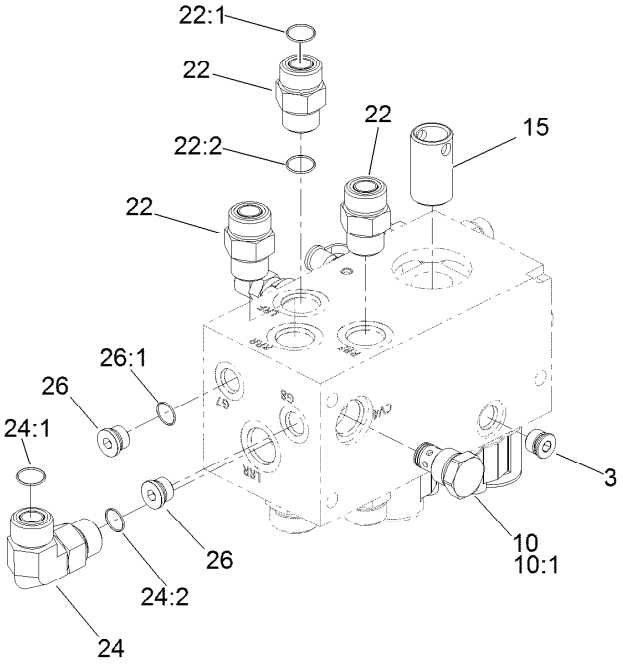

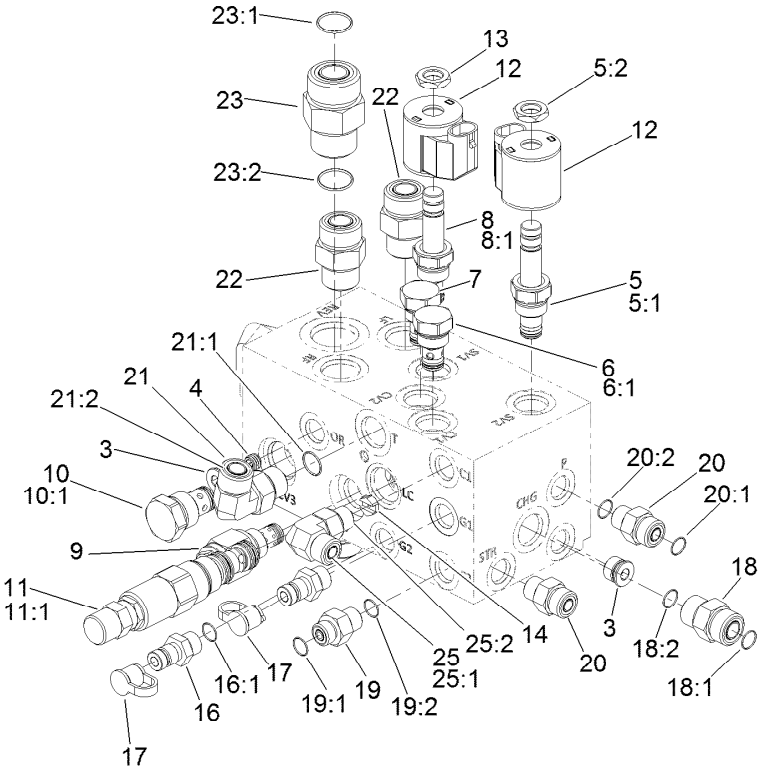

Steer/Lift Manifold Assembly No. 138-4489

Ref.	Part Number	Qty.	Description
3	112-9213	3	Plug
4	110-8883	1	Plug-Orifice (0.040)
5	112-9206	1	Solenoid Valve ASM
5:1	105-9156	1	Seal Kit
5:2	110-2634	1	Nut-Coil
6	114-2873	1	Check Valve ASM
6:1	105-9156	1	Seal Kit
7	139-1213	1	Valve-Check
8	120-6562	1	Valve-Solenoid
8:1	105-9156	1	Seal Kit
9	139-6298	1	Valve-Relief (Bi-Directional)
10	110-8881	2	Valve-Check
10:1	105-9159	1	Seal Kit ●
11	144-0501	1	Valve-Logic, 220 PSI (Adjustable)
11:1	119-2159	1	Seal Kit
12	110-0497	2	Coil-Solenoid
13	110-2634	2	Nut-Coil

Ref.	Part Number	Qty.	Description
14	139-6296	1	Orifice-Check 0.100 DIA
15	139-6297	1	Nipple-Filter
16	59-7410	2	Fitting-Diagnostic
16:1	237-42	1	O-Ring
17	354-79	2	Cap-Dust
18	340-4	1	Fitting-Straight
18:1	237-30	1	O-Ring
18:2	237-79	1	O-Ring
19	340-1	1	Fitting-Straight
19:1	237-21	1	O-Ring
19:2	237-42	1	O-Ring
20	340-2	2	Fitting-Straight
20:1	237-22	1	O-Ring
20:2	237-42	1	O-Ring
21	340-98	1	Fitting-Elbow, 90 DEG
21:1	237-79	1	O-Ring
21:2	237-30	1	O-Ring
22	340-7	5	Fitting-Straight

● Not illustrated

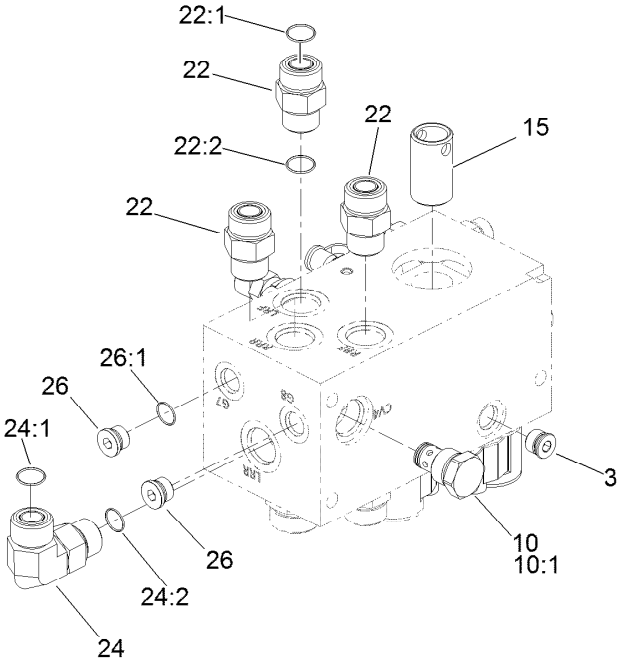

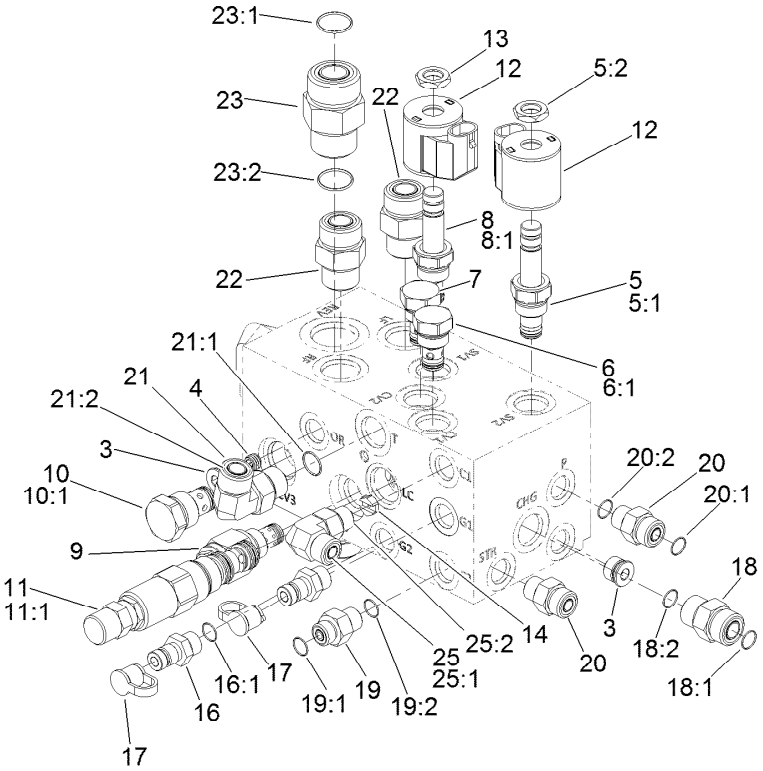

Steer/Lift Manifold Assembly No. 138-4489 (continued)

Ref.	Part Number	Qty.	Description
22:1	237-65	1	O-Ring
22:2	237-80	1	O-Ring
23	340-9	1	Fitting-STR
23:1	237-58	1	O-Ring
23:2	237-81	1	O-Ring
24	340-17	1	Fitting-Elbow, 90 DEG
24:1	237-65	1	O-Ring

Ref.	Part Number	Qty.	Description
24:2	237-80	1	O-Ring
25	340-77	1	Fitting-Elbow, 90 DEG
25:1	237-22	1	O-Ring
25:2	237-42	1	O-Ring
26	353-989	2	Plug-Hex, Hollow
26:1	237-42	1	O-Ring

● Not illustrated

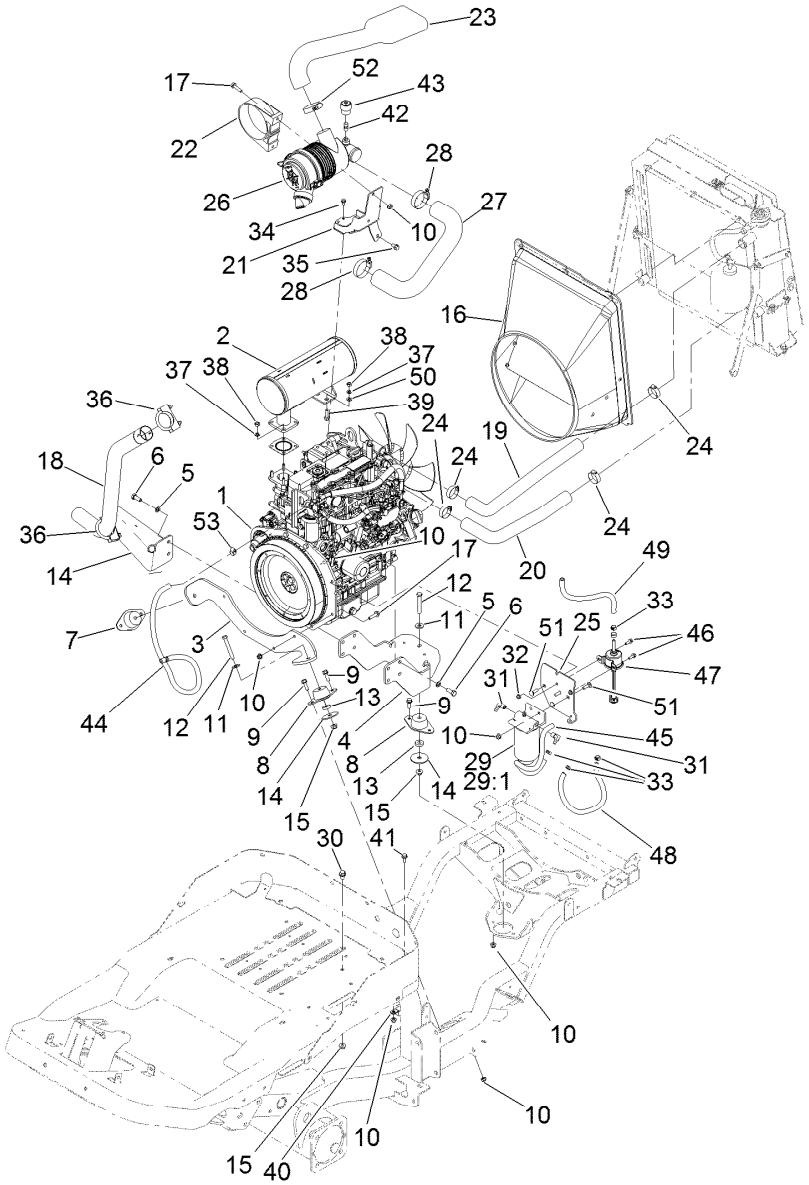

Engine, Air Cleaner and Exhuast Assembly

Ref.	Part Number	Qty.	Description
1	139-6182	1	Engine-Yanmar 3Tnv80F-Nxdtr
2	139-6269	1	Muffler ASM
3	138-4464-0P	1	Mount-Engine, Front [primed]
4	138-0424-0P	1	Mount-Engine, Rear 24HP [primed
5	48-9590	8	Washer-Lock
6	33115-025	8	Screw-HH
7	139-0856	1	Mount-Engine
8	125-5244	2	Mount-Engine
9	3234-29	5	Screw-HHF
10	104-8300	16	Nut-HF, NI
11	80-6990	3	Washer-Hardened
12	323-14	3	Screw-HH
13	138-6462	3	Support-Isolator
14	144-0515-03	1	Support-Tailpipe
15	104-8301	4	Nut-HF, NI
16	139-6279	1	Shroud - Fan ASM
17	3234-36	6	Screw-HHF
18	144-0570	1	Pipe-Exhaust
19	138-4493	1	Hose-Radiator, Upper
20	138-4494	1	Hose-Radiator, Lower
21	138-4486-0P	1	Bracket-Air Cleaner [primed]
22	95-5806	1	Bracket-Mounting, Air Cleaner
23	138-4460	1	Hose-Intake, Air Cleaner
24	2412-34	4	Clamp-Hose
25	138-4472-0P	1	Angle-Filter Mount
26	93-2190	1	Air Cleaner ASM
27	137-5881	1	Hose-Intake
28	2412-92	2	Clamp-Hose
29	110-9044	1	Separator-Filter
29:1	110-9049	1	Filter-Spin On, Fuel/Water
30	3234-9	1	Screw-HHF
31	353-781	2	Fitting-HYD, 90
32	104-7201	2	Nut-HF, NI
33	92-2379	5	Clamp-Hose
34	33103-016	3	Screw-HHF
35	33104-016	1	Screw-HHF
36	18-2130	2	Clamp
37	3253-4	6	Washer-Lock

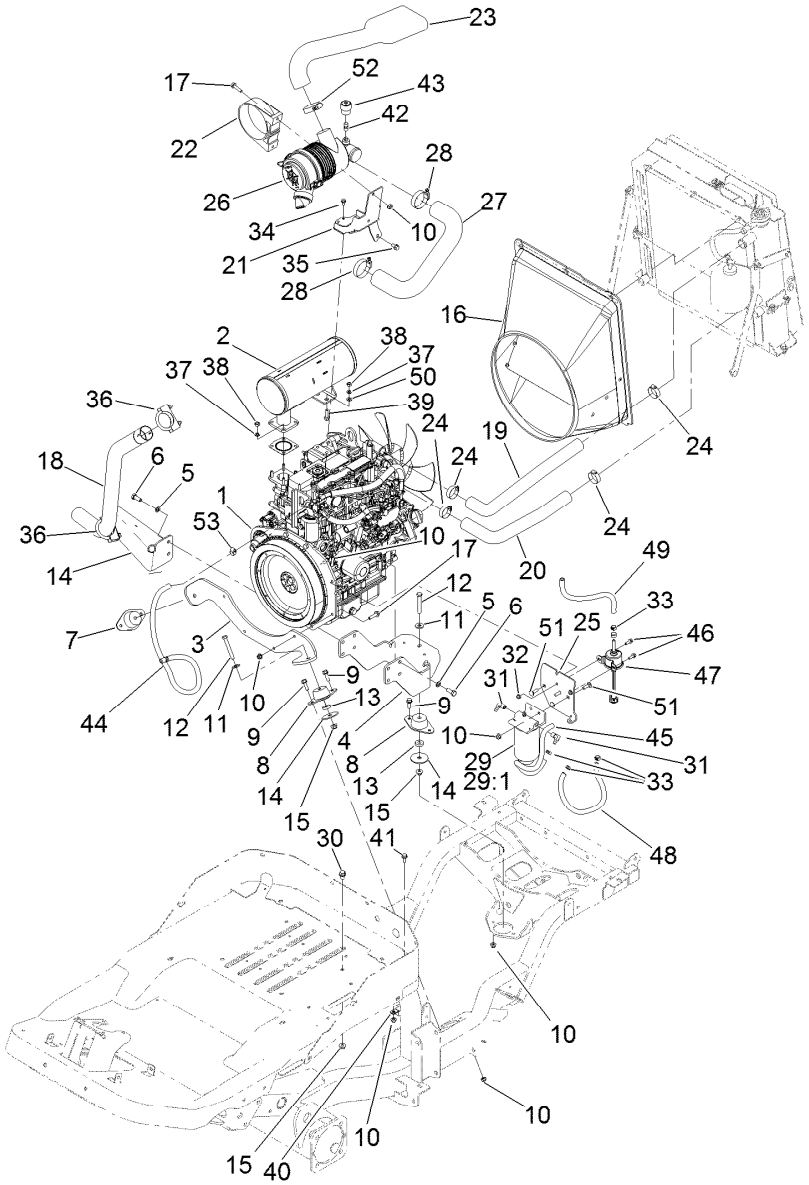

Engine, Air Cleaner and Exhuast Assembly (continued)

Ref.	Part Number	Qty.	Description
38	33014-00	6	Nut-Hex
39	33104-030	2	Screw-HHF
40	120-1959	1	Clamp
41	3234-47	1	Screw-HHF
42	94-1416	1	Adapter-Indicator
43	93-9164	1	Indicator-Mini
44	132-7563	1	Hose-Breather, Transmission
45	110-4112	1	Hose-Fuel

Ref.	Part Number	Qty.	Description
46	3234-4	2	Screw-HHF
47	121-5613	1	Pump-Fuel, Electric
48	110-4101	1	Hose-Fuel
49	110-4104	1	Hose-Fuel
50	88-7200	2	Washer-Flat
51	3230-2	4	Bolt-CARR
52	2412-130	1	Clamp-Hose
53	2412-108	1	Clamp-Worm

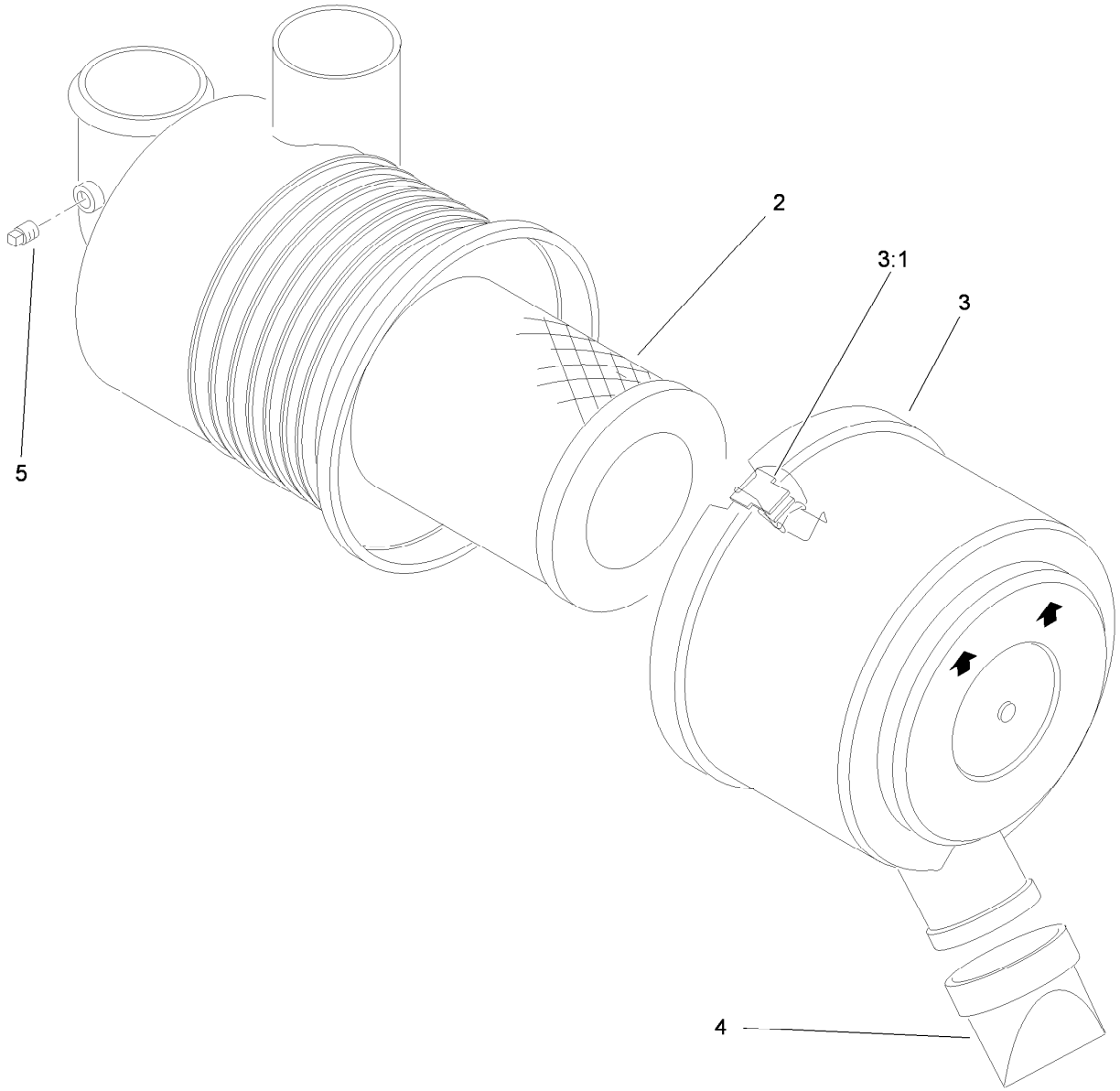

Air Cleaner Assembly No. 93-2190

Ref.	*Part Number*	*Qty.*	*Description*
2	108-3811	1	Filter-Air
3	94-3652	1	Cover ASM
3:1	1-643283	2	Latch-Cleaner, Air
4	87-9400	1	Valve-Vacuator
5	285-17	1	Plug-Pipe

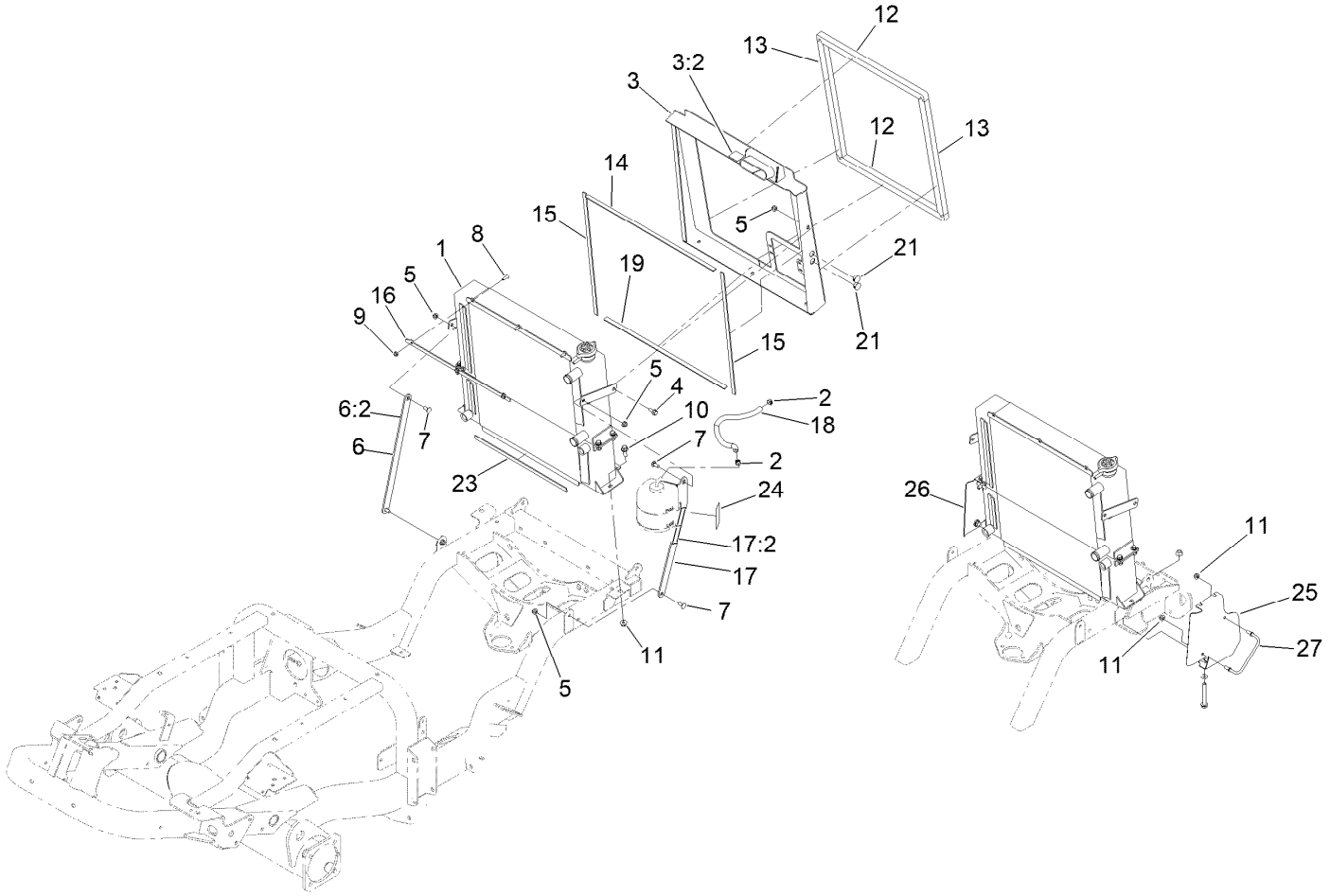

Radiator and Cooler Assembly

Ref.	Part Number	Qty.	Description
1	138-7420	1	Radiator/Oil Cooler ASM
2	92-2379	2	Clamp-Hose
3	139-6232	1	Shroud-Cooler ASM
3:2	115-8155	1	Decal-Warning
4	3234-47	2	Screw-HHF
5	104-8300	15	Nut-HF, NI
6	139-6229	1	Strap-Cooler
6:2	93-7272	1	Decal-Warning
7	3230-23	9	Bolt-CARR
8	1-807512	3	Bolt-CARR
9	104-7201	3	Nut-HF, NI
10	3234-42	2	Screw-HHF
11	104-8301	2	Nut-HF, NI
12	138-4410	2	Seal-Foam

Ref.	Part Number	Qty.	Description
13	138-4411	2	Seal-Foam
14	138-4453	1	Foam-Radiator
15	138-4454	2	Foam-Radiator, Side
16	138-4461-0P	1	Bracket-Shroud Retainer
17	139-6230	1	Bracket-Bottle Mount
17:2	93-7272	1	Decal-Warning
18	106-1126	1	Hose-Fuel
19	108-1393	1	Strip-Foam
21	130-8439	2	Plug-Dome
23	130-9182	1	Foam-Radiator, Short
24	144-0472	1	Decal-Coolant Level
25	144-0537-03	1	Bracket-Cooler Shroud, LH
26	144-0544-03	1	Bracket-Cooler Shroud, RH
27	144-3905	2	Guide-Hose

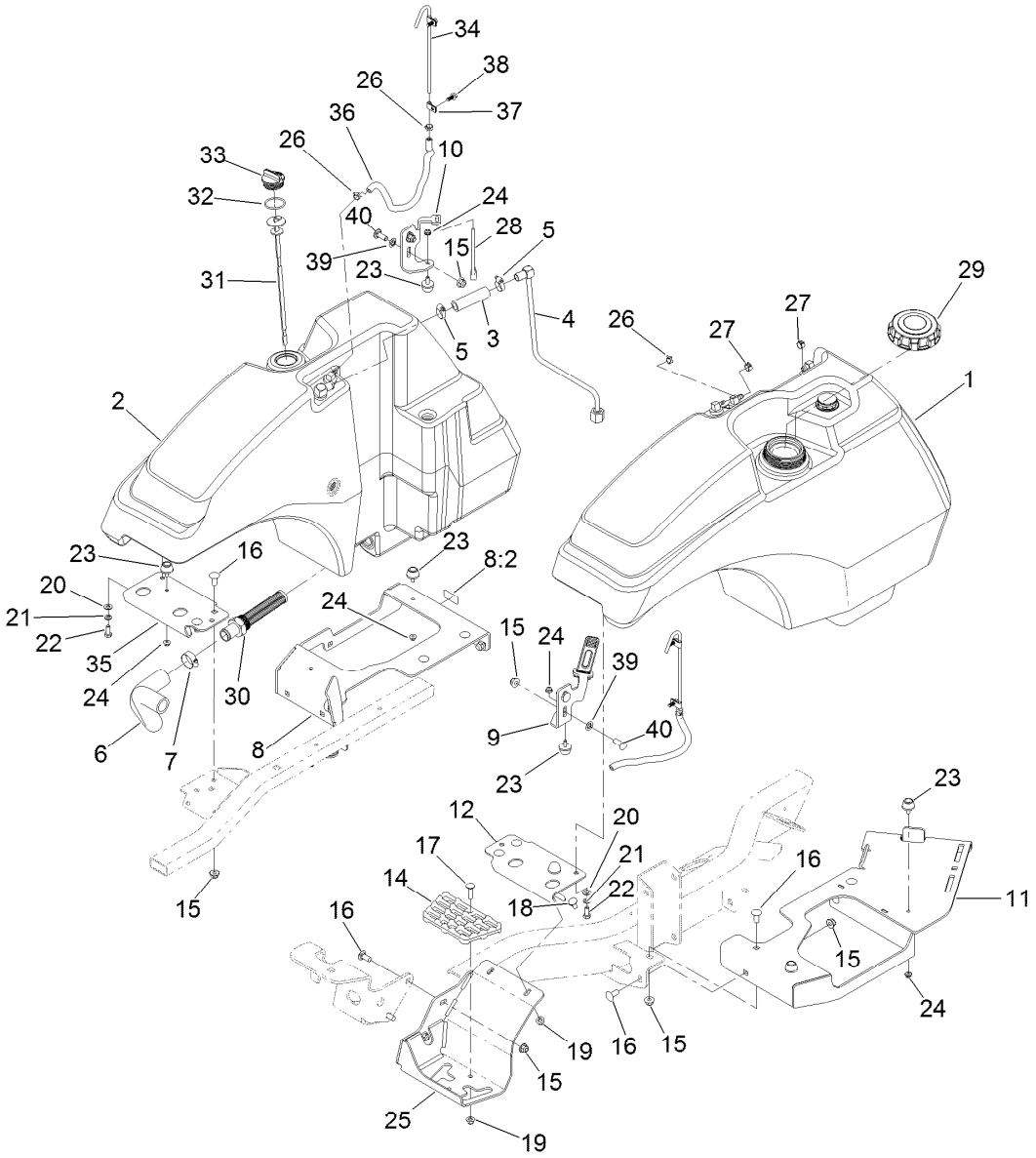

Fuel and Hydraulic Tank Assembly

Ref.	Part Number	Qty.	Description
1	138-0291	1	Fuel Tank
2	138-4418	1	Hydraulics Tank ASM
3	114-4920	1	Hose
4	138-7392	1	Hydraulic Tube ASM
5	2412-119	2	Clamp-Hose, Worm Drive
6	138-7361	1	Hose-Suction
7	2412-34	1	Clamp-Hose
8	139-6228	1	Tank Support-Hydraulic
8:2	127-0392	1	Decal-Hot Surface
9	138-0441-03	1	Bracket-Tank Hold Down, LH
10	138-7315-03	1	Bracket-Tank Hold Down, RH
11	138-4404-03	1	Tray-Tank/Battery
12	138-7365-03	1	Bracket-Tank Mount, Front LH
14	126-4781	1	Step-Deck
15	104-8301	19	Nut-HF, NI
16	3231-27	15	Screw-CARR
17	3230-3	1	Screw-CARR
18	3230-23	2	Bolt-CARR

Ref.	Part Number	Qty.	Description
19	104-8300	3	Nut-HF, NI
20	3256-23	2	Washer-Plain
21	3253-4	2	Washer-Lock
22	322-3	2	Screw-HH
23	109-2365	8	Bumper-Rubber
24	104-7201	8	Nut-HF, NI
25	139-0927-01	1	Bracket-Mount, Step
26	2412-98	4	Clamp-Hose
27	92-2379	2	Clamp-Hose
28	131-8402	2	Strap-Down, Hold
29	125-9171	1	Cap-Fuel
30	138-7499	1	Fitting-Strainer
31	138-7388	1	Dipstick
32	94-8166	1	O-Ring
33	93-7498	1	Plug-Plastic
34	139-6252	2	Tube-Vent
35	139-0940-03	1	Bracket-Tank Mount, Front RH
36	139-6253	2	Hose-Fuel
37	2412-72	4	Clip-Closed, Insulated
38	99-6810	4	Screw-HHF

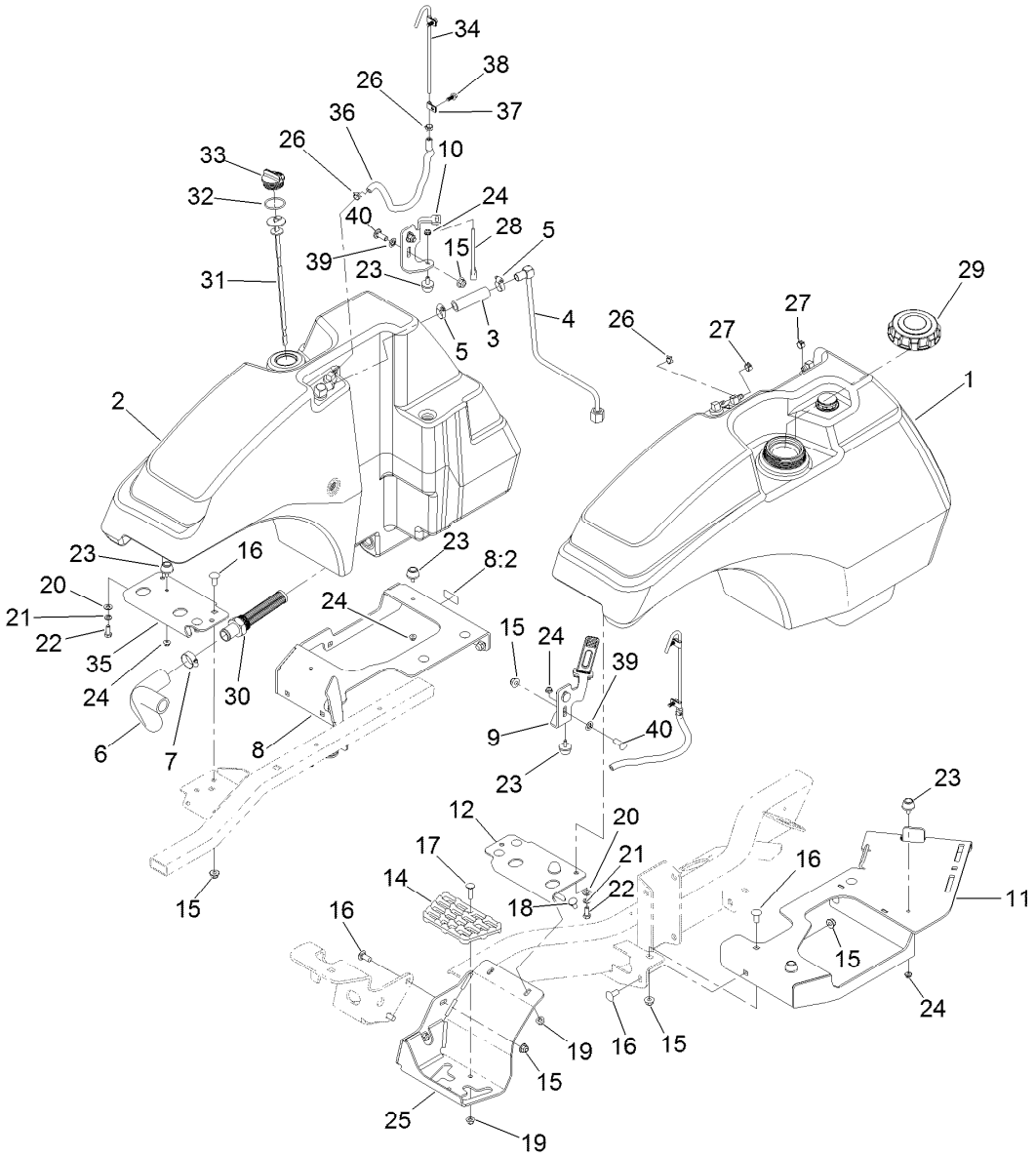

Fuel and Hydraulic Tank Assembly (continued)

Ref.	*Part Number*	*Qty.*	*Description*
39	107-3154	6	Nut-Push
40	3231-22	4	Screw-CARR

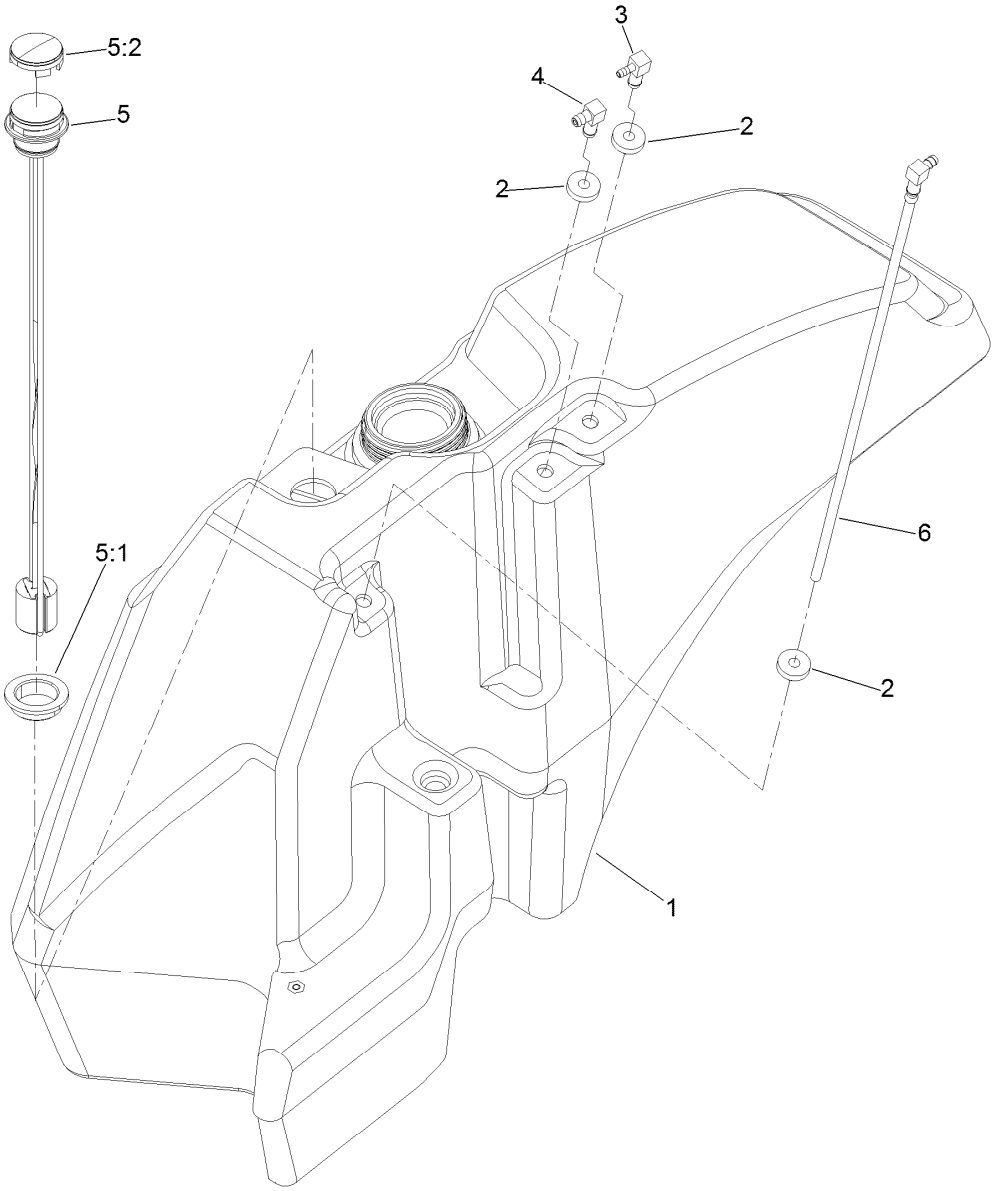

Fuel Tank Assembly No. 138-0291

Ref.	*Part Number*	*Qty.*	*Description*
1	138-7385	1	Fuel Tank W/Inserts ASM
2	46-6560	3	Bushing
3	104-5228	1	Fitting-Elbow, 90 DEG
4	46-6550	1	Fitting-Elbow, 90 DEG
5	139-0872	1	Gauge-Fuel
5:1	119-0508	1	Seal
5:2	117-8404	1	Dial-Gauge
6	138-7389	1	Pipe-Stand

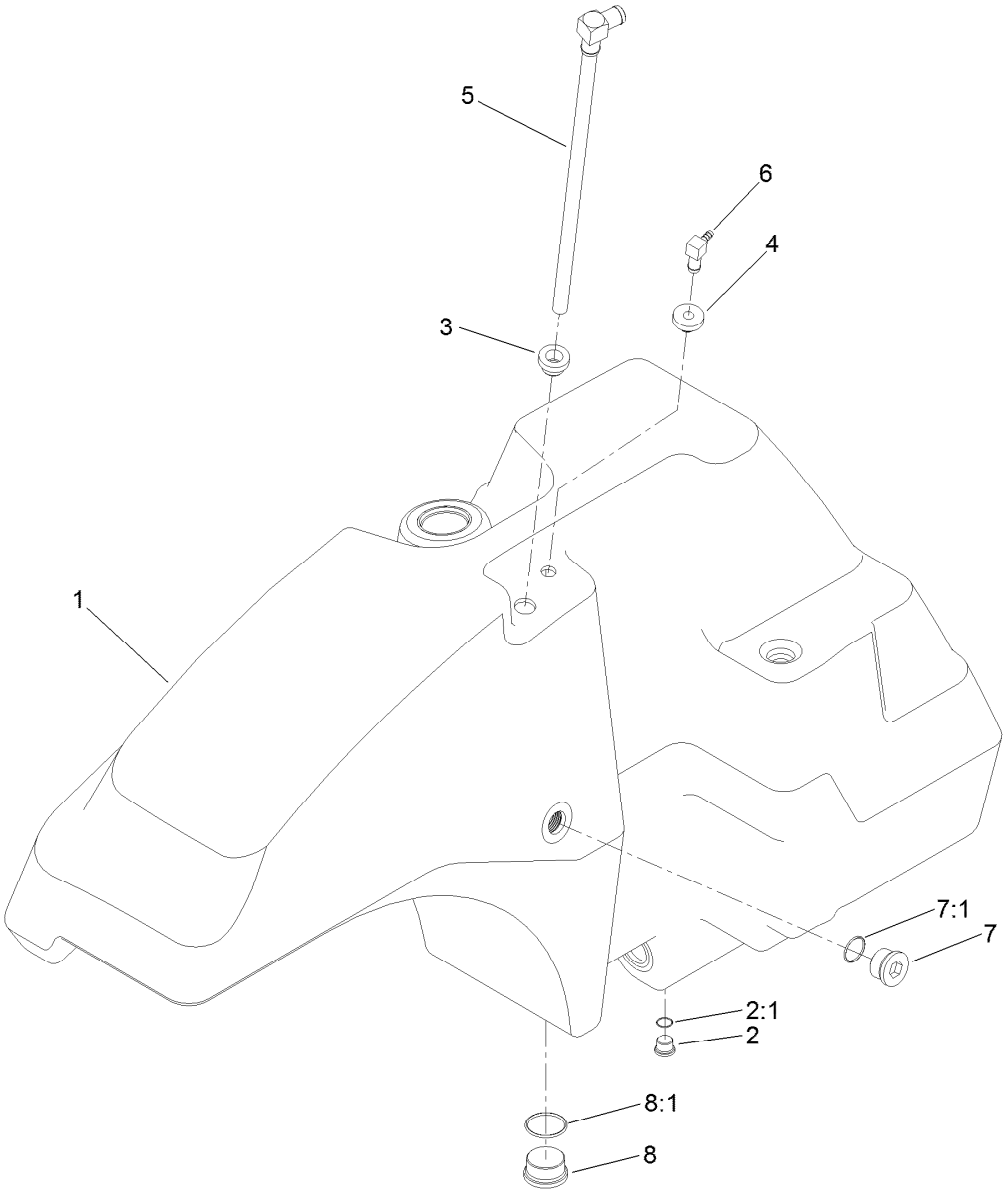

Hydraulic Tank Assembly No. 138-4418

Ref.	*Part Number*	*Qty.*	*Description*
1	138-7386	1	Tank-Hydraulic W/Inserts
2	353-989	1	Plug-Hex, Hollow
2:1	237-42	1	O-Ring
3	104-0790	1	Bushing
4	46-6560	1	Bushing
5	138-7384	1	Tube-Drop
6	104-5228	1	Fitting-Elbow, 90 DEG
7	139-6333	1	Fitting-Plug
7:1	237-81	1	O-Ring
8	105-3921	1	Fitting-Plug
8:1	237-146	1	O-Ring

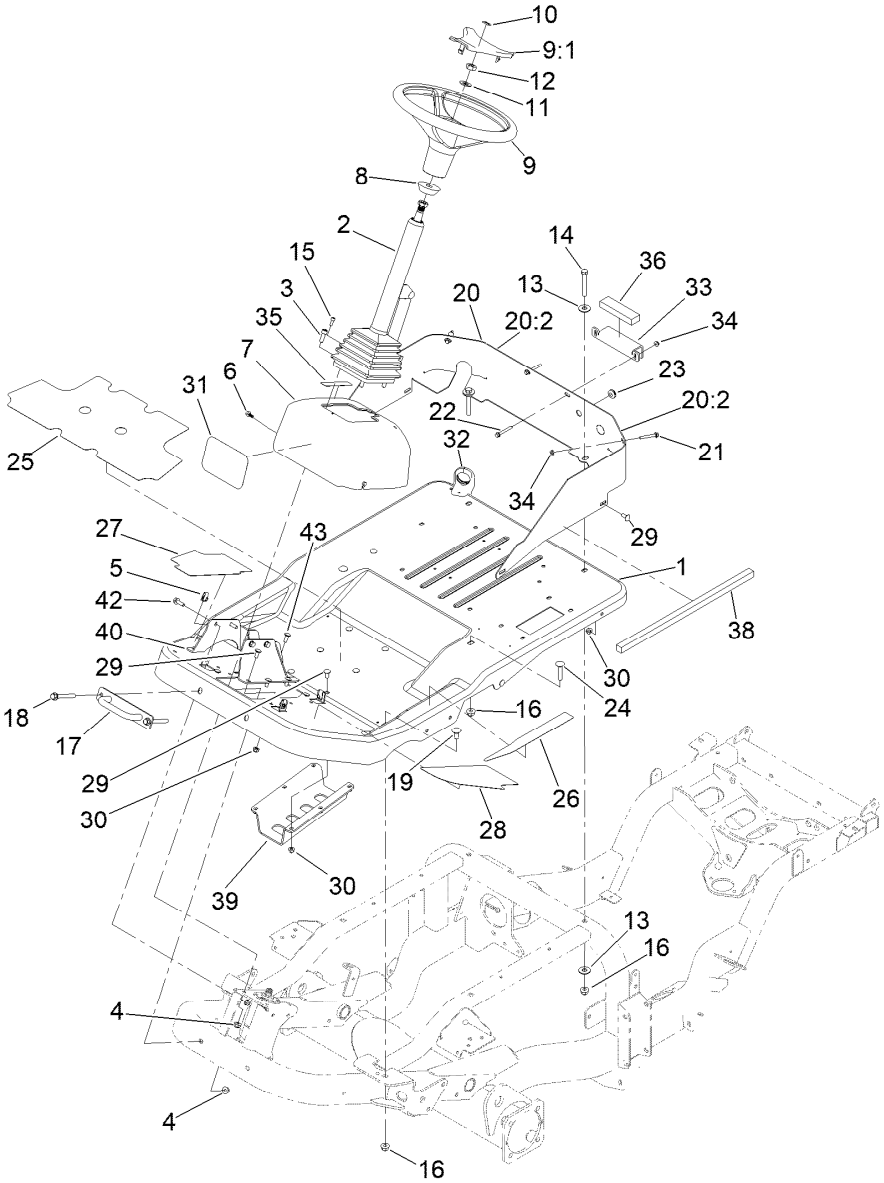

Platform, Steering and Console Assembly

Ref.	Part Number	Qty.	Description
1	144-4030SP	1	Platform-Stamped
2	139-0857	1	Column-Steering, Tilt
3	3274-7	4	Screw-HSH
4	104-8301	6	Nut-HF, NI
5	107069	4	Clip
6	99-6810	4	Screw-HHF
7	138-7494	1	Cover-Steering
8	93-5429	1	Collar-Foam
9	98-1471	1	Wheel-Steering
9:1	98-1468	1	Cover-Wheel, Steering
10	98-1459	1	Decal
11	3256-27	1	Washer-Flat
12	3296-33	1	Nut-Lock, NI
13	3256-40	4	Washer-Flat
14	324-12	2	Screw-HH
15	105-2409	4	Screw-HSH
16	114-8417	6	Nut-HF, NI
17	138-0288	1	Bracket-Down, Tie
18	3234-41	2	Screw-HHF
19	3232-1	2	Screw-CARR
20	144-0528	1	Plate-Firewall, Lower

Ref.	Part Number	Qty.	Description
20:2	132-1316	2	Decal-Danger, Belt
21	125-4287	2	Screw-HHF
22	3234-34	2	Screw-HHF
23	1-633630	1	Grommet
24	3232-5	2	Screw-CARR
25	144-4029	1	Tread-Foot, Main
26	139-0859	1	Tread-Foot, Side
27	139-0885	1	Tread-Foot, Front RH
28	139-0886	1	Tread-Foot, Front LH
29	3230-23	15	Bolt-CARR
30	104-8300	22	Nut-HF, NI
31	105-1217	1	Decal
32	144-0473	1	Plug-Harness, Firewall
33	139-2166-0P	1	Bracket-Hood Support
34	104-7201	4	Nut-HF, NI
35	140-1460	1	Decal-Traction Pedal
36	139-6202	1	Foam-Strip
38	139-6207	1	Foam-Strip
39	144-3954-03	1	Guard-Tubes, Hydraulic
40	145-5983-0P	1	Bracket-Steering Mount [primed]

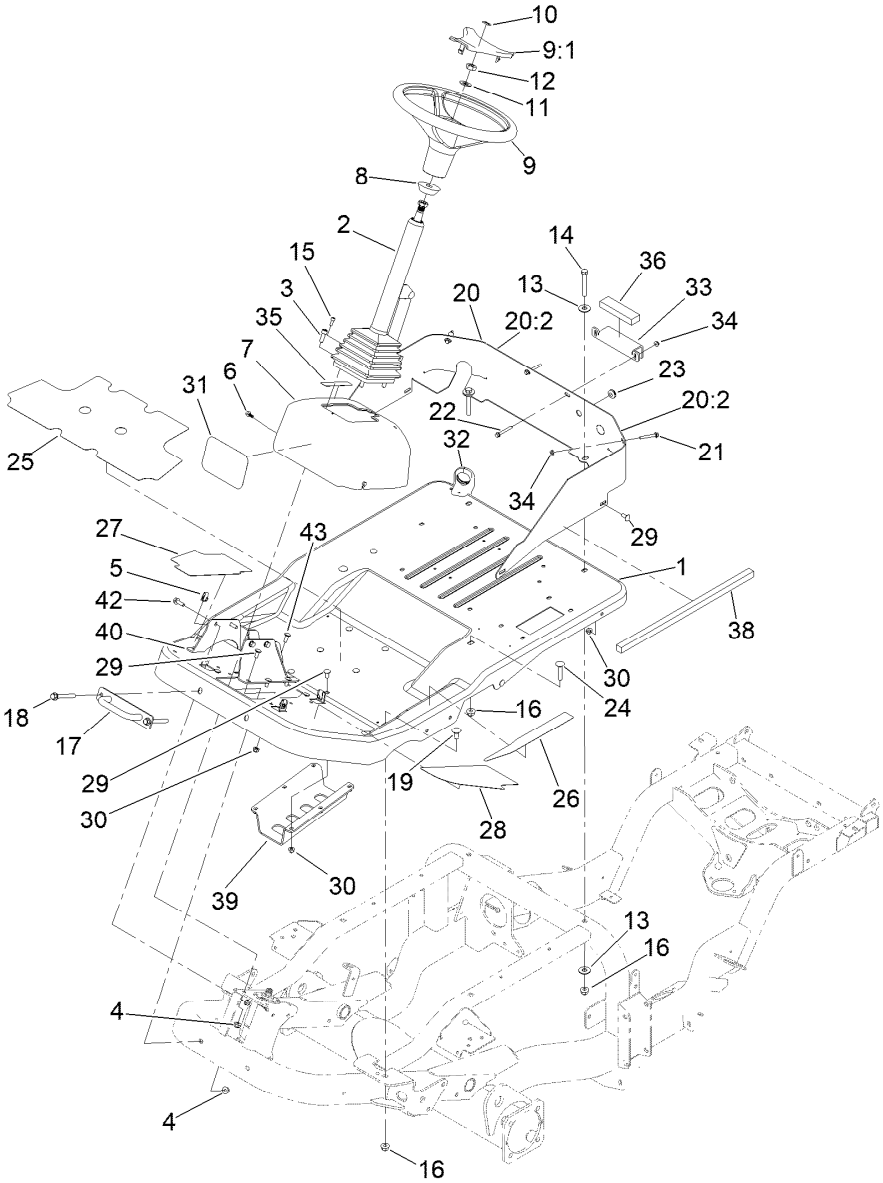

Platform, Steering and Console Assembly (continued)

Ref.	Part Number	Qty.	Description
42	3234-29	4	Screw-HHF
43	3230-10	1	Bolt-CARR

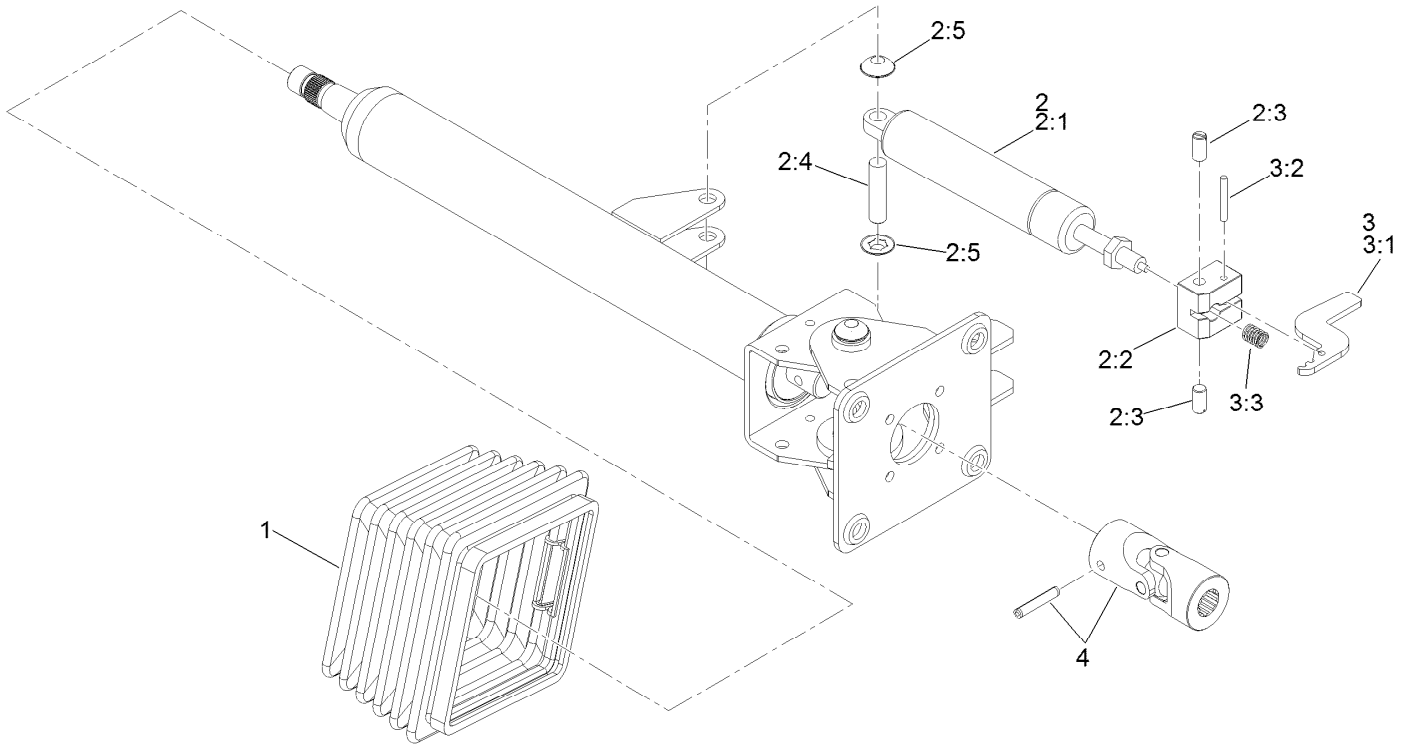

Steering Column Assembly No. 139-0857

Ref.	Part Number	Qty.	Description
1	110-6462	1	Bellows-Rubber
2	110-6463	1	Cylinder Service Kit
2:1		1	Cylinder-Gas ●
2:2		1	Block-Pedal ●
2:3		2	Bolt ●
2:4		1	Pin ●
2:5		2	Washer-Lock ●
3	136-4385	1	Pedal Service Kit
3:1		1	Pedal ●
3:2		1	Pin ●
3:3		1	Spring ●
4	120-6256	1	Universal Joint Kit

● Not serviced separately

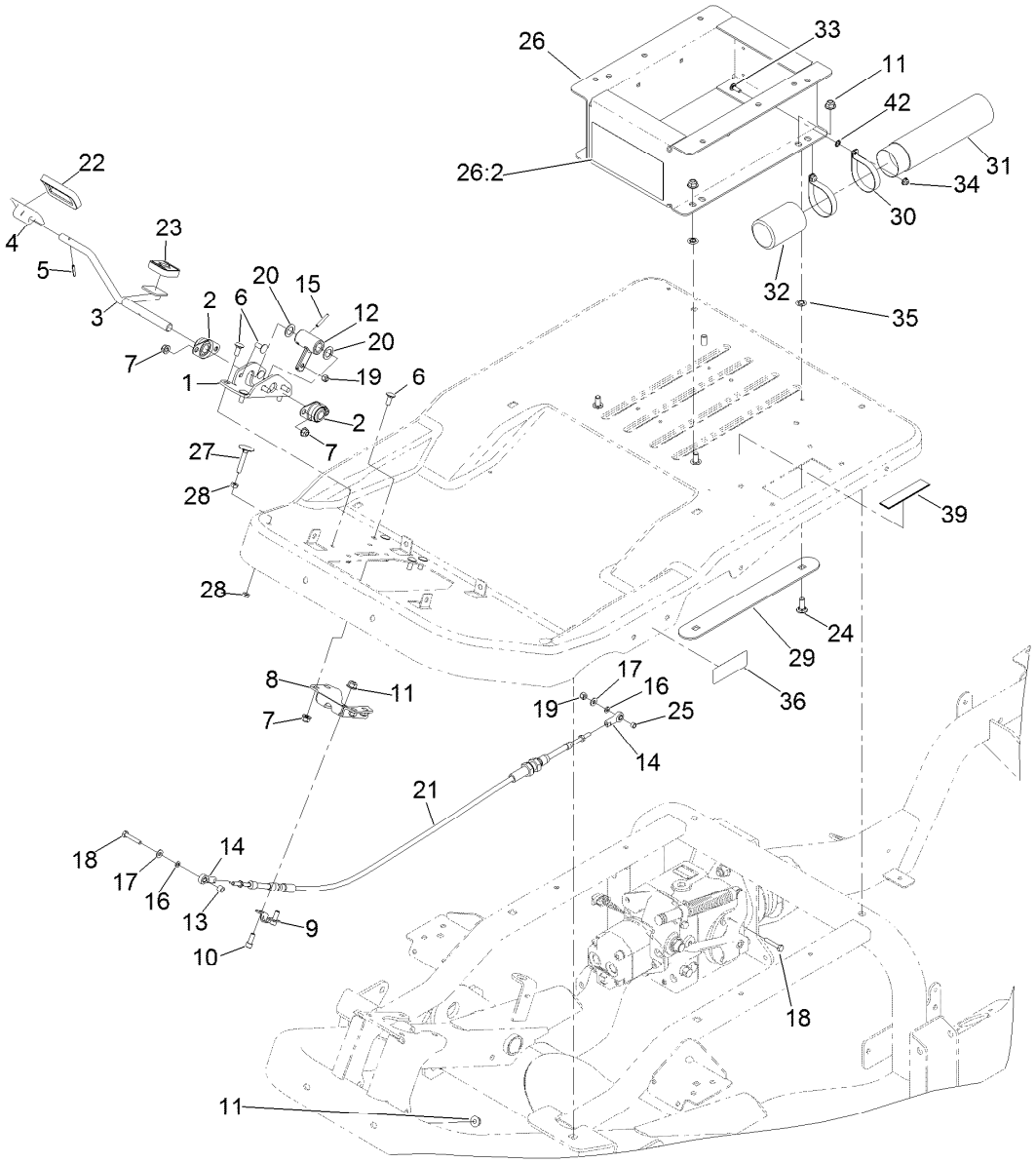

Traction Pedal Assembly

Ref.	Part Number	Qty.	Description
1	138-7477-01	1	Bracket-Pedal, Traction
2	256-236	2	Bearing-Mount, Flange
3	138-4594	1	Pedal-Traction
4	117-9507	1	Pedal-Accelerator
5	32121-45	1	Pin-Spring
6	3230-23	12	Bolt-CARR
7	104-8300	12	Nut-HF, NI
8	138-7446-01	1	Bracket-Cable, Traction
9	93-2092	1	Clamp-Cable
10	3274-10	2	Screw-HSH
11	104-8301	6	Nut-HF, NI
12	117-5199	1	Hub-Pedal, Traction
13	66-8010	1	Spacer
14	2411-41	2	Rod End-Ball Joint
15	32121-6	1	Pin-Roll, Slotted
16	33093-00	2	Washer-Flat
17	3256-22	2	Washer-Flat
18	321-9	2	Screw-HH
19	3296-42	2	Nut-Lock, NI
20	137-2601	2	Washer

Ref.	Part Number	Qty.	Description
21	137-2568	1	Traction-Cable
22	74-9100	1	Pad-Pedal, Forward
23	74-9110	1	Pad-Pedal, Reverse
24	3231-22	4	Screw-CARR
25	130-9691	1	Spacer
26	139-6221	1	Seat Box ASM
26:2	139-6215	1	Decal-Warning
27	115-8240	1	Screw-Elevator
28	3218-2	2	Nut-Hex Jam
29	138-7422-0P	2	Strip-Seat Mount
30	107-1865	2	R-Clamp
31	104-7050	1	Tube-Manual
32	104-7048	1	Cap-Housing
33	1-807512	2	Bolt-CARR
34	104-7201	2	Nut-HF, NI
35	107-3154	4	Nut-Push
36	106-9206	2	Decal-Torque, Wheel
39	133-8062	1	Decal-Arrestor, Spark
42	32115-15	2	Nut-Push

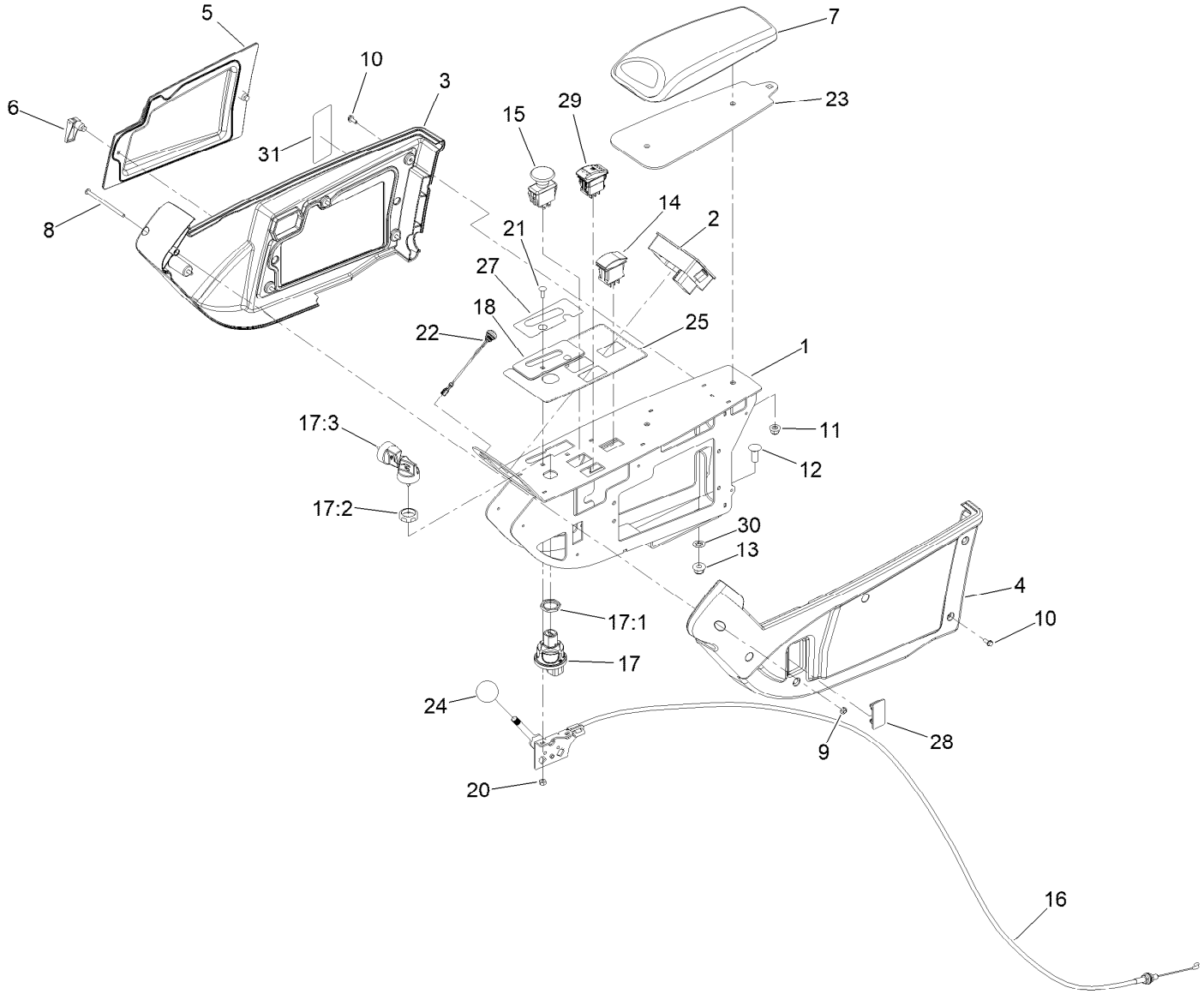

Control Console Assembly

Ref.	Part Number	Qty.	Description
1	133-6406-03	1	Panel
2	132-9751	1	Tdm 2001
3	108-7605	1	Cover-RH
4	108-7604	1	Cover-LH
5	108-7616	1	Panel-Access
6	74-5950	2	Latch-Swell
7	131-9637	1	Armrest-Quick Find
8	3250-22	1	Screw-PPH
9	3296-12	1	Nut-Lock, NI
10	32144-112	10	Screw-HWH
11	104-8300	2	Nut-HF, NI
12	3231-22	2	Screw-CARR
13	104-8301	2	Nut-HF, NI
14	100-1535	1	Switch-Rocker, (On)-Off-(On)
15	93-9999	1	Switch-PTO
16	138-4549	1	Cable-Throttle

Ref.	Part Number	Qty.	Description
17	121-5159	1	Switch-Ignition
17:1	121-5160	1	Nut-Hex
17:2	122-2704	1	Nut-Face, M22 (Plastic)
17:3	121-5162	1	Set-Key, Ignition
18	137-2510	1	Cover-Throttle, Lever
20	3296-2	2	Nut-Lock, NI
21	1-807533	2	Bolt-CARR
22	136-9678	1	Switch-Pushbutton
23	138-4548-03	1	Plate-Spacer, Console Pad
24	1-603175	1	Knob-Ball
25	138-7471	1	Decal-Console
27	138-7473	1	Decal-Throttle
28	99-7420	1	Plug-Hole
29	110-0811	1	Switch-Rocker On-None-(On)
30	107-3154	2	Nut-Push
31	140-3125	1	Decal-Fuse

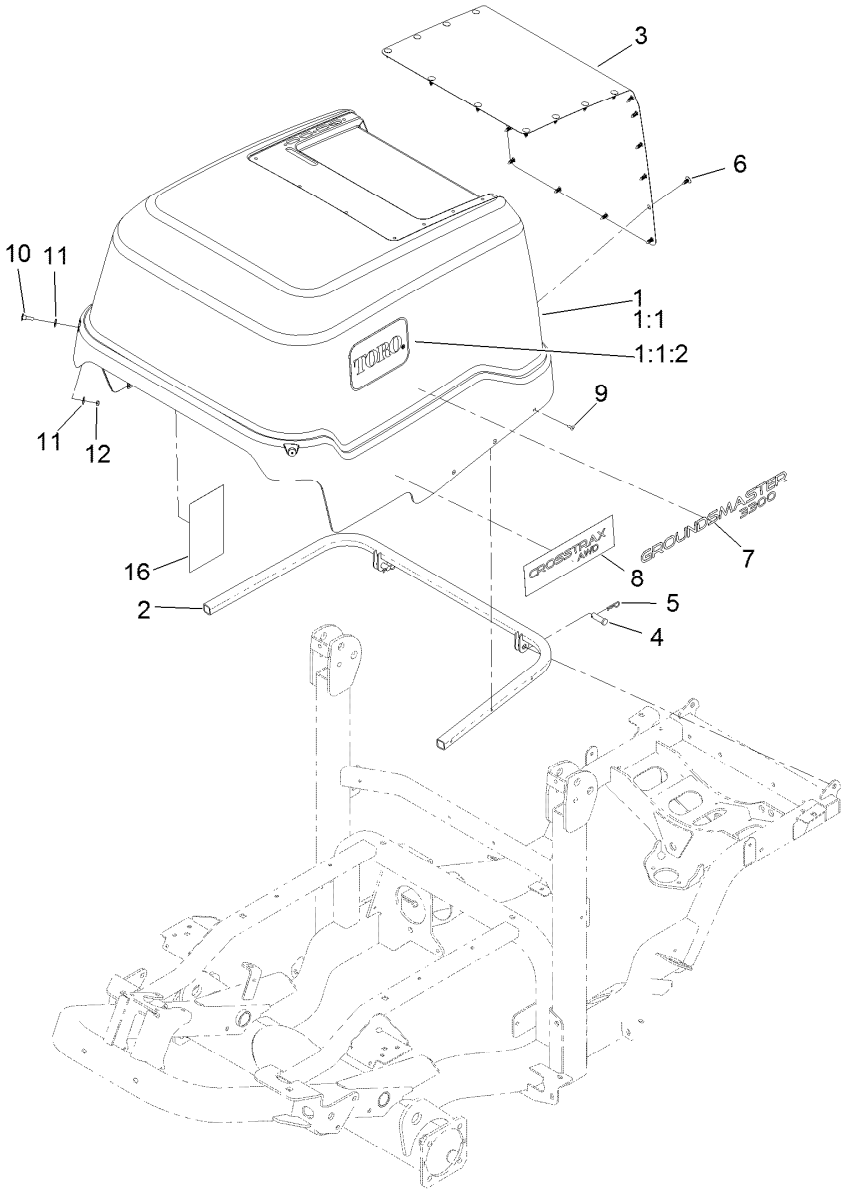

Hood Assembly

Ref.	Part Number	Qty.	Description
1	138-7330SP	1	Hood
1:1		1	Hood ASM ■
1:1:2	62-7400	2	Decal-Toro Logo
1:2	139-6225	1	Tape-Heat, Hood Front ●
1:3	139-6226	1	Tape-Heat, Hood Rear ●
1:4	139-6227	1	Tape-Heat, Hood Side ●
2	138-7331-03	1	Support-Hood
3	138-7474-03	1	Screen-Cooler
4	283-68	2	Pin-Clevis
5	3290-467	2	Pin-Hair
6	117-2382	24	Plug-Plastic
7	139-6151	2	Decal-Identification
8	110-8859	2	Decal
9	114439	10	Rivet-Blind
10	139-0855	2	Screw-Countersunk, Oval
11	3256-2	4	Washer-Flat
12	3296-56	2	Nut-Lock, NI
16	144-0518	1	Decal-Service, Gm3200

● Not illustrated

■ Not serviced separately

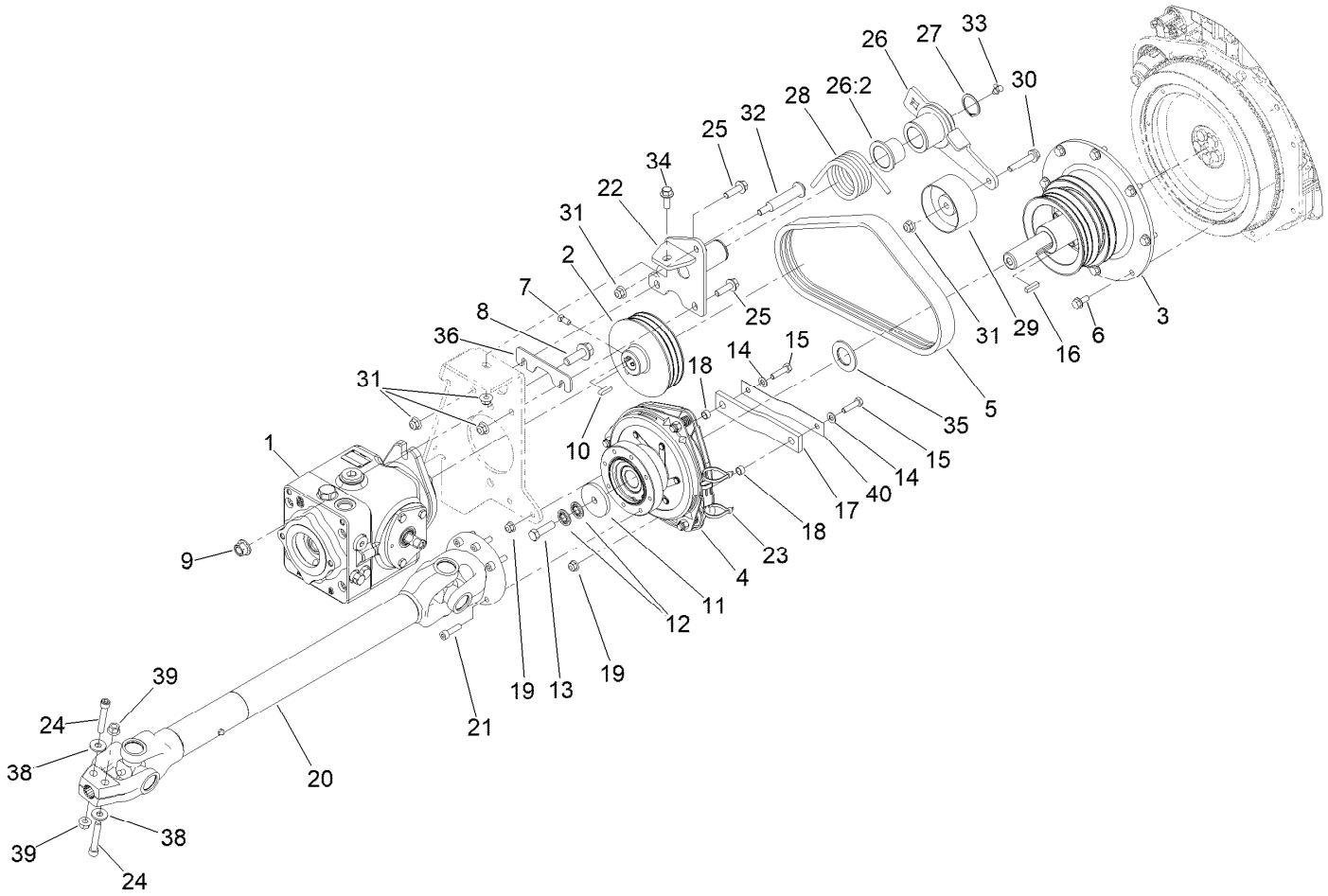

Hydraulic PTO Assembly

Ref.	Part Number	Qty.	Description
1	138-0305	1	Variable Piston Pump ASM
2	139-6257	1	Pulley-3/3V
3	139-6258	1	Stubshaft-3/3V
4	144-4013	1	Clutch-Gt5
5	139-6259	1	Belt-3/3V
6	138-0690	8	Screw-HH
7	1-803022	2	Screw-Set
8	100-6116	2	Screw-HHF
9	99-5107	2	Nut-Lock
10	94-3645	1	Key
11	139-6238	1	Washer
12	1-603610	2	Washer-Spring
13	109-9761	1	Screw-HH
14	3256-23	2	Washer-Plain
15	322-6	2	Screw-HH
16	1-807259	1	Key
17	139-6278	1	Strap-Clutch Stop
18	65-9820	2	Spacer
19	104-8300	3	Nut-HF, NI
20	144-0521SP	1	Driveshaft ASM

Ref.	Part Number	Qty.	Description
21	144-0452	6	Screw-Hex Socket
22	140-3091	1	Idler Pivot ASM
23	3290-378	2	Tie-Cable
24	131-8591	2	Screw-HSH
25	119-4061	2	Screw-HHF
26	140-6179	1	Idler Arm ASM
26:2	93-4510	2	Bushing-Caster
27	32120-84	1	Ring-Snap, External
28	140-3102	1	Spring-Torsion
29	140-3101	1	Pulley-Flat
30	108-3742	1	Screw-HHF
31	104-8301	5	Nut-HF, NI
32	112-3977	1	Bolt-Shoulder
33	302-40	1	Fitting-Grease, 90 DEG
34	3234-42	1	Screw-HHF
35	139-6239	1	Washer
36	144-4046	1	Shim-Pivot
38	80-6990	2	Washer-Hardened
39	32128-36	2	Nut-HF
40	144-4025	1	Strip-Steel, Spring

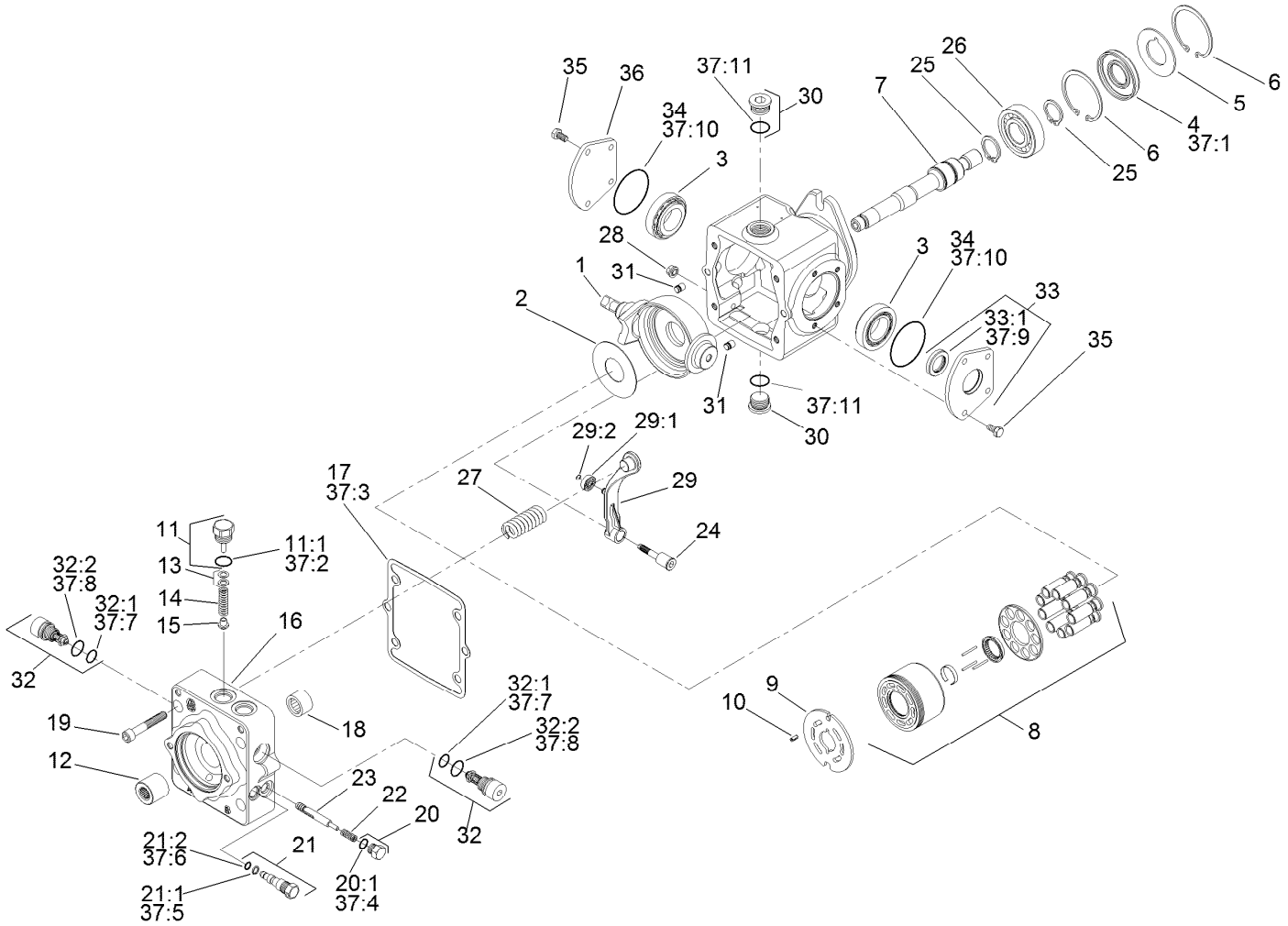

Variable Piston Pump Assembly No. 138-0305

Ref.	Part Number	Qty.	Description
1	140-3111	1	Plate-Swash
2	75-0400	1	Plate-Thrust
3	110-6483	2	Bearing Kit
4	110-6471	1	Seal-Lip
5	95-4400	1	Washer-Backup
6	131-8616	2	Ring-Retaining
7	140-3113	1	Shaft
8	110-6472	1	Cylinder Block Kit ASM
9	140-3114	1	Plate-Valve, CW
10	131-3800	1	Pin-Slotted
11	110-6486	1	Plug-Relief, Charge
11:1	28-3570	1	O-Ring
12	140-3122	1	Coupling
13	140-3115	1	Shim Kit
14	110-6474	1	Spring
15	110-6475	1	Poppet
16	115-8087	1	Cap-End
17	110-6476	1	Gasket-Cap, End

Ref.	Part Number	Qty.	Description
18	75-0500	1	Bearing-Needle
19	110-6489	4	Screw
20	94-9415	2	Plug ASM
20:1		1	O-Ring ■
21	107-4364	1	Bypass Valve ASM
21:1	25-2630	1	Ring-Back Up
21:2	110-6498	1	O-Ring
22	140-3116	2	Spring
23	110-6492	1	Spool-Loop, Flush
24	110-6493	1	Pivot-Return, Neutral
25	125-5280	2	Ring-Retaining
26	75-0460	1	Bearing-Ball
27	140-3117	1	Spring-Neutral Return
28	110-6496	1	Nut-Seal
29	110-6497	1	Neutral Return Arm ASM
29:1	110-6494	1	Bearing-Cam
29:2	110-3056	1	Ring-Retaining
30	69-3130	2	Plug

● Not illustrated

■ Not serviced separately

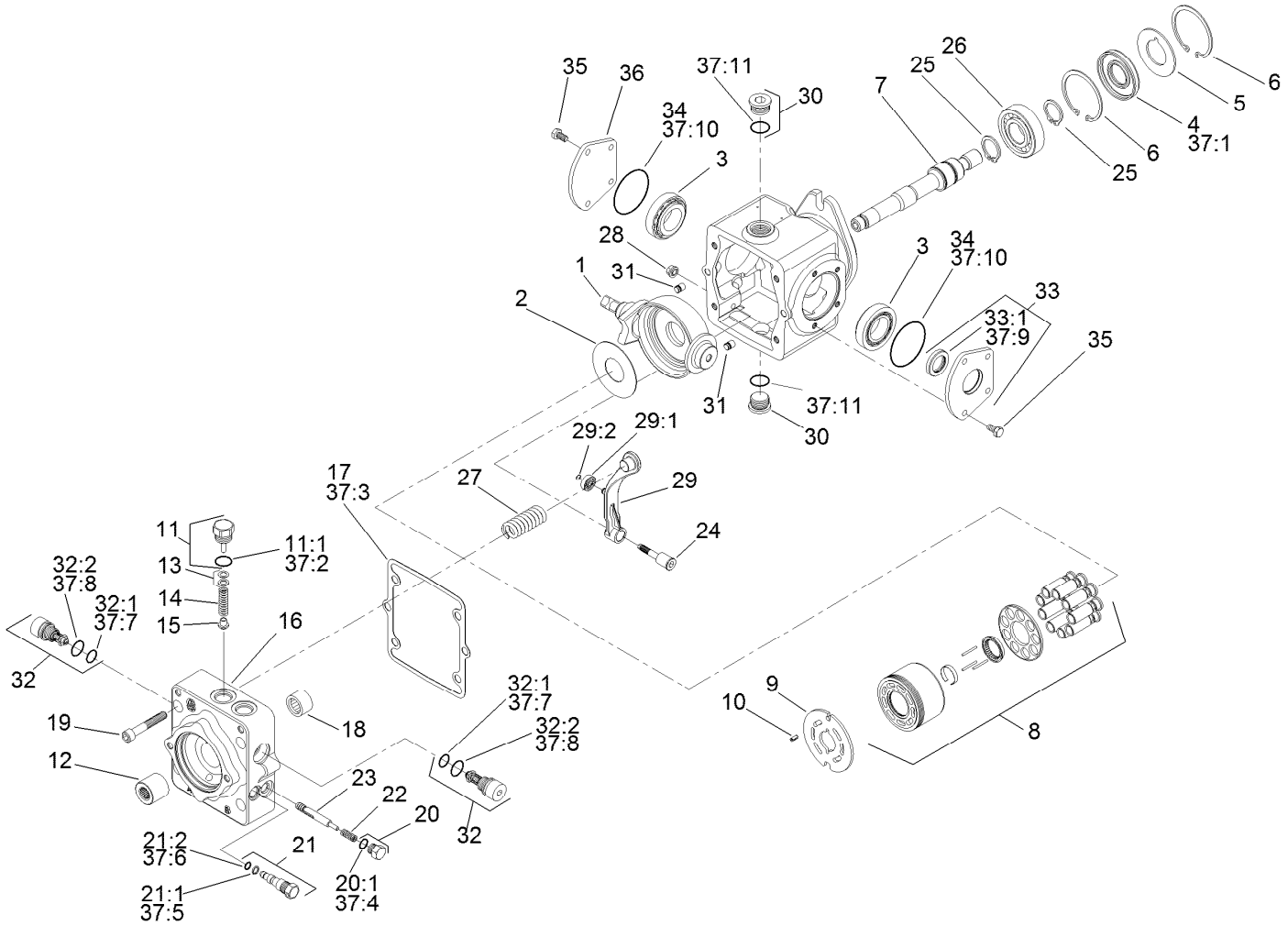

Variable Piston Pump Assembly No. 138-0305 (continued)

Ref.	Part Number	Qty.	Description
31	112-0158	2	Pin
32	110-6477	2	Valve-Relief
32:1	75-0240	1	O-Ring ●
32:2	84-0560	1	O-Ring ●
33	110-6499	1	Trunnion Cover ASM
33:1	110-6478	1	Seal-Lip
34	84-0430	2	O-Ring
35	112-0151	8	Screw
36	84-0440	1	Cover-Trunnion
37	110-6481	1	Seal Kit ●
37:1	110-6471	1	Seal-Lip

Ref.	Part Number	Qty.	Description
37:2	28-3570	1	O-Ring
37:3	110-6476	1	Gasket-Cap, End
37:4	131-8631	2	O-Ring
37:5	25-2630	1	Ring-Back Up
37:6	110-6498	1	O-Ring
37:7	75-0240	2	O-Ring
37:8	84-0560	2	O-Ring
37:9	110-6478	1	Seal-Lip
37:10	84-0430	2	O-Ring
37:11	131-8614	2	O-Ring

● Not illustrated

■ Not serviced separately

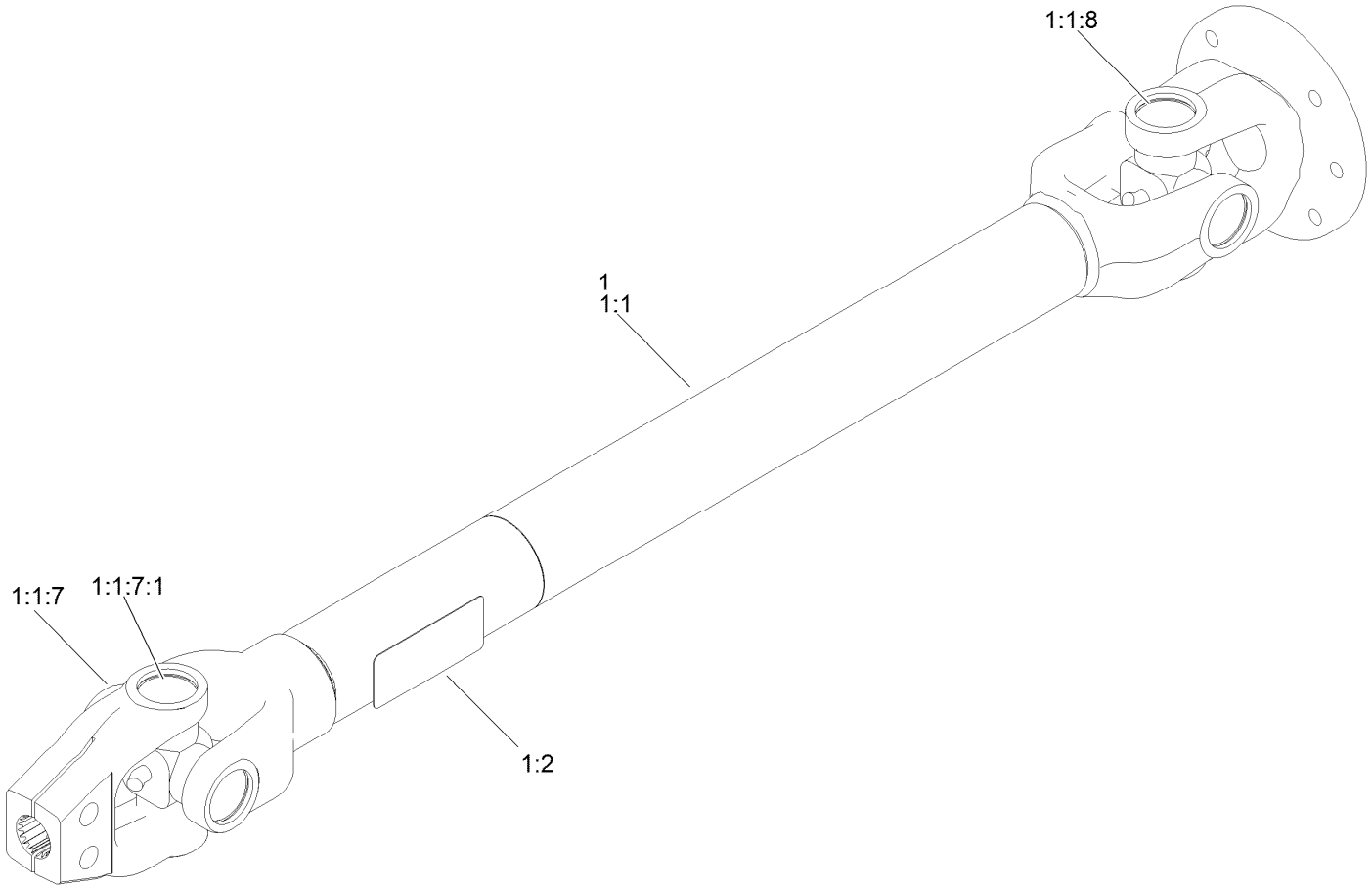

Driveshaft Assembly No. 144-0521SP

Ref.	*Part Number*	*Qty.*	*Description*
1		1	Driveshaft ASM ●
1:1		1	Shaft-Drive, Jdl ●
1:1:7		1	Yoke-Splined W/Cross Joint ●
1:1:7:1	144-0550	1	Bearing-Cross Joint
1:1:8	144-0550	1	Bearing-Cross Joint
1:2	139-6304	1	Decal-Danger, Entanglement

● Not serviced separately

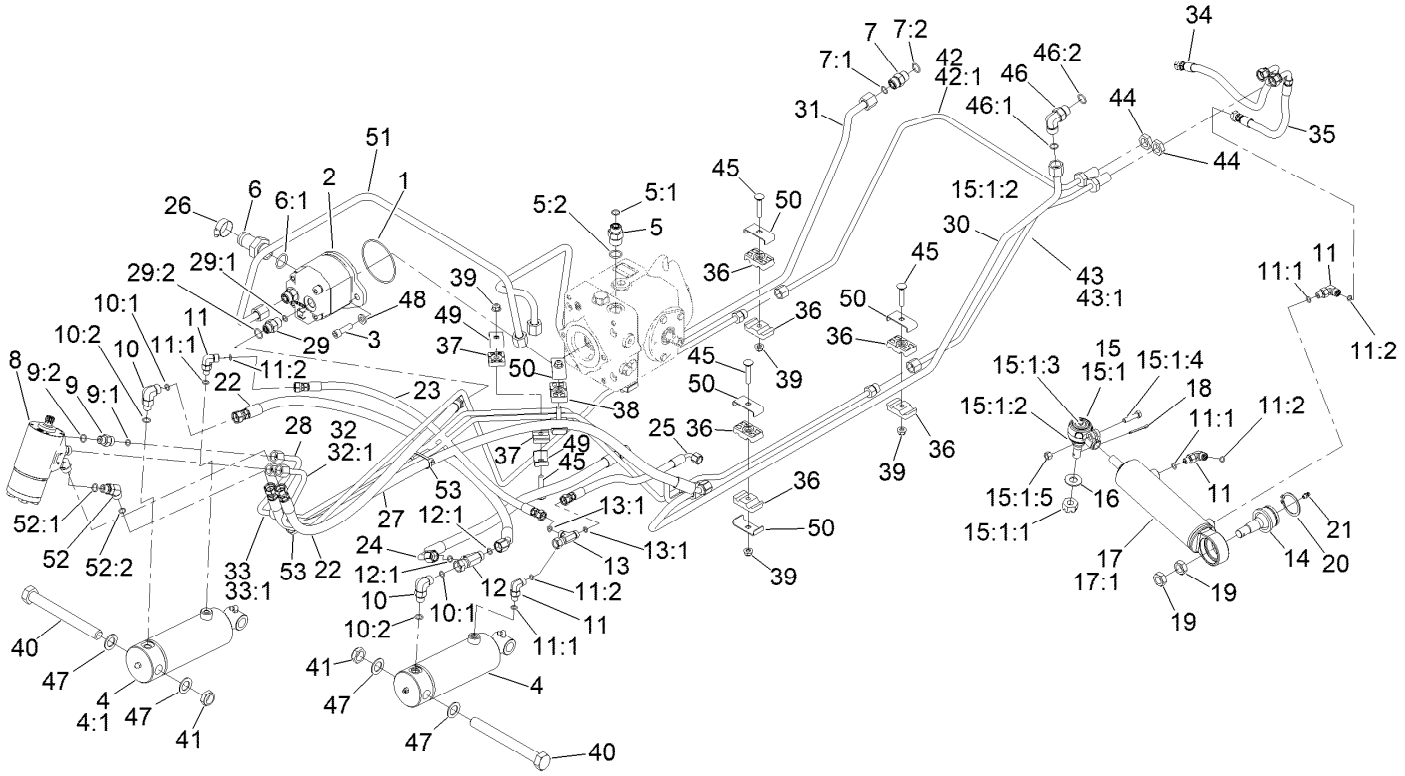

Hydraulic Assembly

Ref.	Part Number	Qty.	Description
1	237-161	1	O-Ring
2	138-0321	1	Pump-Gear
3	3274-1	2	Screw-HSH
4	139-0854	2	Cylinder-Hydraulic
4:1	140-3110	1	Kit-Seal ●
5	340-6	1	Fitting-Straight
5:1	237-30	1	O-Ring
5:2	237-80	1	O-Ring
6	99-3017	1	Fitting
6:1	237-81	1	O-Ring
7	340-4	2	Fitting-Straight
7:1	237-30	1	O-Ring
7:2	237-79	1	O-Ring
8	114-8119	1	Steering Valve ASM
9	340-2	3	Fitting-Straight
9:1	237-22	1	O-Ring
9:2	237-42	1	O-Ring
10	340-77	2	Fitting-Elbow, 90 DEG

● Not illustrated

Ref.	Part Number	Qty.	Description
10:1	237-22	1	O-Ring
10:2	237-42	1	O-Ring
11	340-132	4	Fitting-Elbow, 90 DEG
11:1	237-78	1	O-Ring
11:2	237-21	1	O-Ring
12	340-115	1	Fitting-Tee
12:1	237-22	2	O-Ring
13	340-151	1	Fitting-Tee
13:1	237-21	2	O-Ring
14	106-6774	1	Joint-Ball
15	106-6895-03	1	Ball Joint ASM
15:1		1	Joint-Ball ■
15:1:1	32136-13	1	Nut-SHH
15:1:2	106-6896	1	Seal
15:1:3	302-5	1	Fitting-Grease
15:1:4	3210-7	1	Screw-HH
15:1:5	32152-5	1	Nut-Hex
16	69-8980	1	Washer

■ Not serviced separately

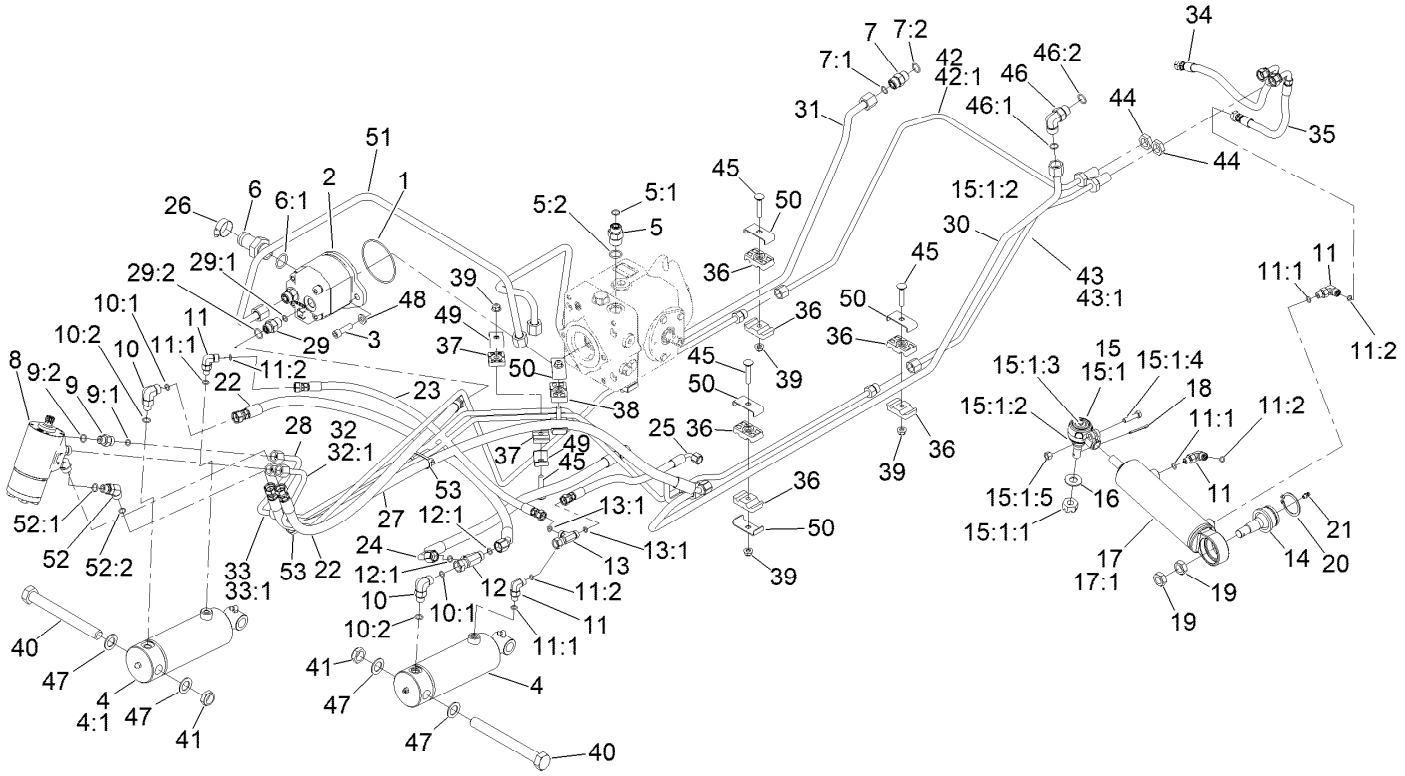

Hydraulic Assembly (continued)

Ref.	Part Number	Qty.	Description
17	139-6277	1	Steering Cylinder
17:1	140-3120	1	Kit-Seal ●
18	3272-12	1	Pin-Cotter
19	3220-6	2	Nut-Jam
20	32151-104	1	Ring-Retaining, External
21	302-5	1	Fitting-Grease
22	137-5844	2	Hose ASM
23	137-5845	1	Hose ASM
24	137-5846	1	Hose ASM
25	137-5847	1	Hose ASM
26	2412-34	1	Clamp-Hose
27	140-3097	1	Hose ASM
28	138-0331	1	Hydraulic Tube ASM
29	340-3	1	Fitting-Straight
29:1	237-22	1	O-Ring
29:2	237-79	1	O-Ring
30	138-7448	1	Hydraulic Tube ASM
31	138-7447	1	Hydraulic Tube ASM

Ref.	Part Number	Qty.	Description
32	138-0333	1	Hydraulic Tube ASM
32:1	237-22	1	O-Ring
33	138-0336	1	Hydraulic Tube ASM
33:1	237-22	1	O-Ring
34	115-0383	1	Hose ASM
35	137-2584	1	Hose ASM
36	56-7972	8	Clamp-Tube
37	56-7973	2	Clamp-Tube
38	56-7970	2	Clamp-Tube
39	104-8300	6	Nut-HF, NI
40	328-23	2	Screw-HH
41	HDW02059	2	Nut-Hex
42	138-0343	1	Hydraulic Tube ASM
42:1	237-22	1	O-Ring
43	138-0344	1	Hydraulic Tube ASM
43:1	237-22	1	O-Ring
44	340-70	2	Nut-Lock
45	3230-5	6	Bolt-CARR

● Not illustrated

■ Not serviced separately

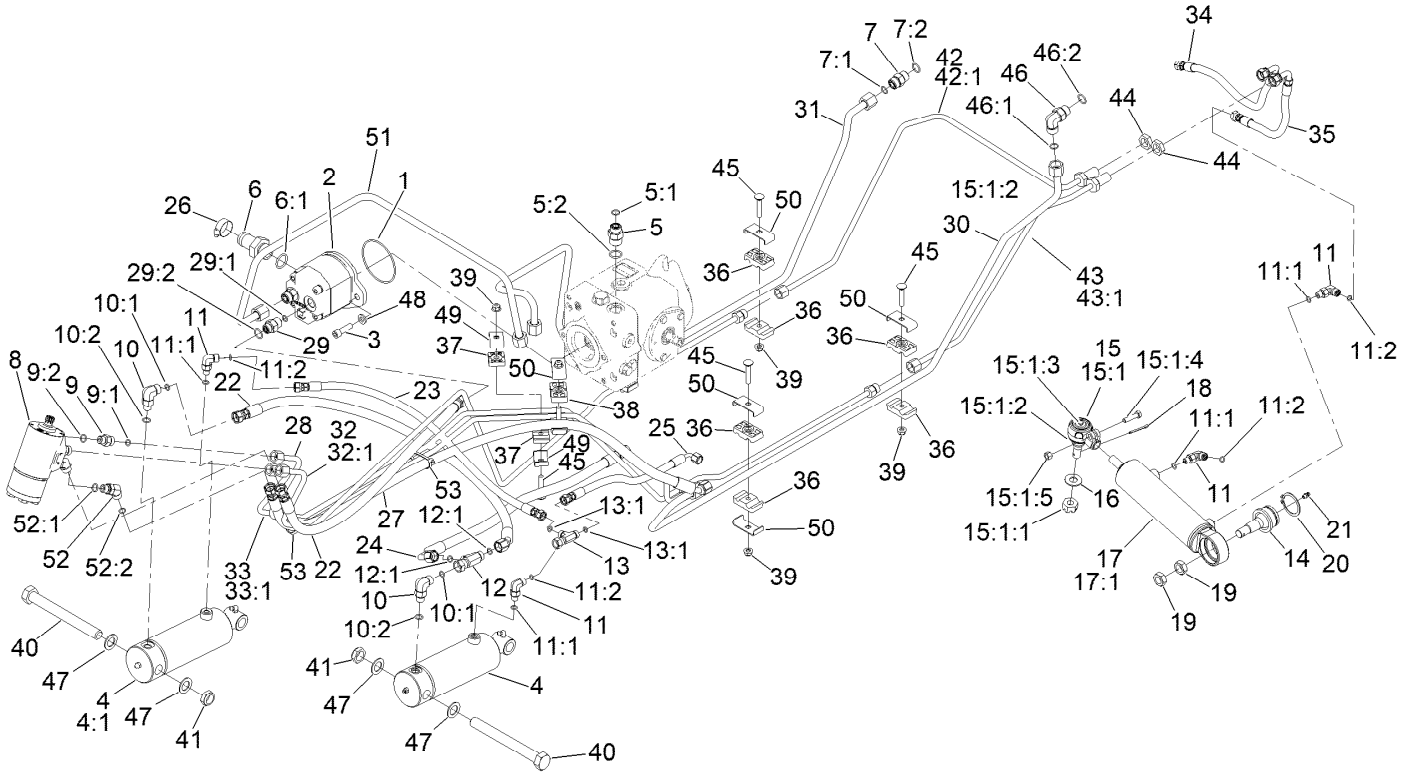

Hydraulic Assembly (continued)

Ref.	Part Number	Qty.	Description
46	340-98	1	Fitting-Elbow, 90 DEG
46:1	237-79	1	O-Ring
46:2	237-30	1	O-Ring
47	126-7888	4	Washer-Nylon
48	139-6293	2	Washer
49	119-1418	2	Plate-Clamp, Short

Ref.	Part Number	Qty.	Description
50	119-1419	8	Plate-Clamp
51	138-0342	1	Hydraulic Tube ASM
52	340-87	2	Fitting-Elbow, 45 DEG
52:1	237-22	1	O-Ring
52:2	237-42	1	O-Ring
53	3290-378	2	Tie-Cable

● Not illustrated

■ Not serviced separately

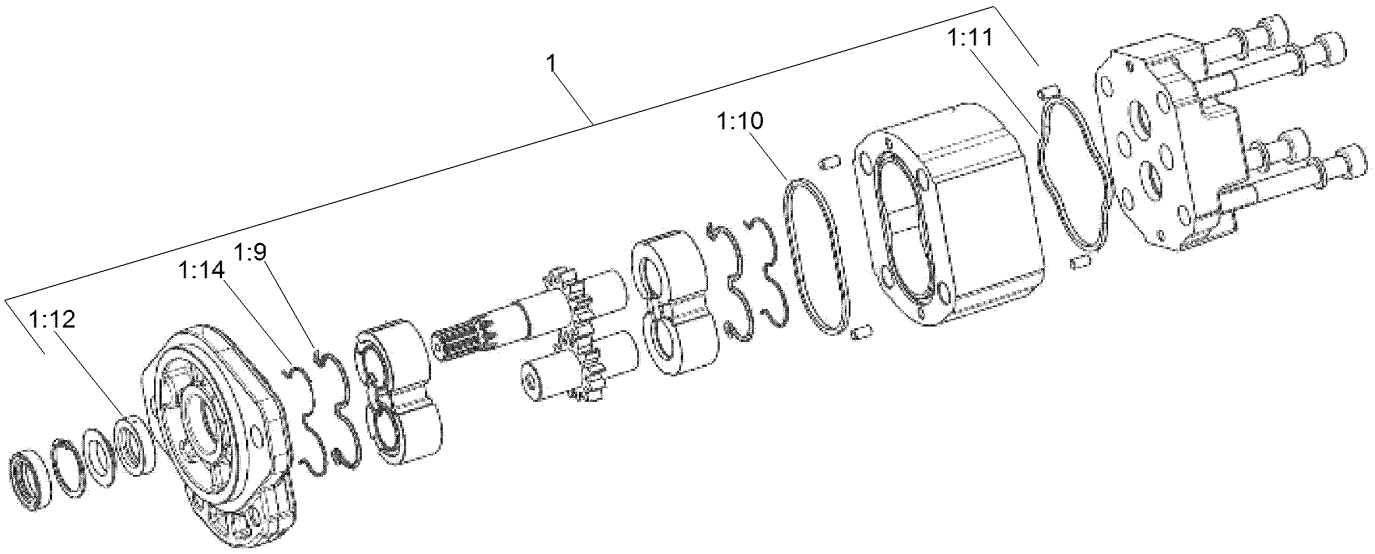

Gear Pump Assembly No. 138-0321

Ref.	*Part Number*	*Qty.*	*Description*
1	139-6299	1	Kit-Seal
1:9		1	Seal ●
1:10		1	Seal-Standard ●
1:11		1	Seal-Square ●
1:12		1	Seal-Shaft ●
1:14		1	Anti Extrusion ●

● Not serviced separately

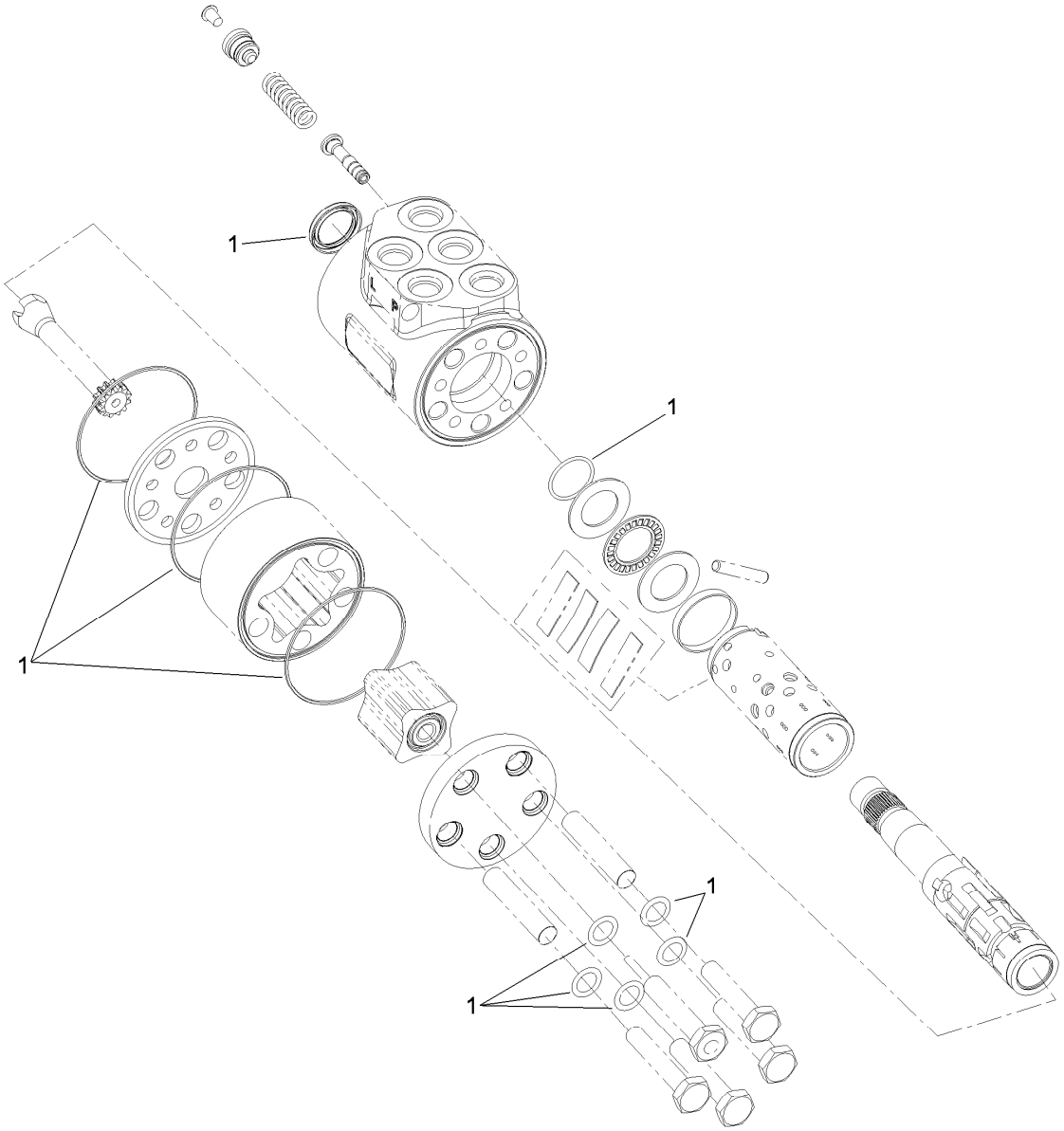

Steering Valve Assembly No. 114-8119

Ref.	*Part Number*	*Qty.*	*Description*
1	106-6716	1	Seal Kit

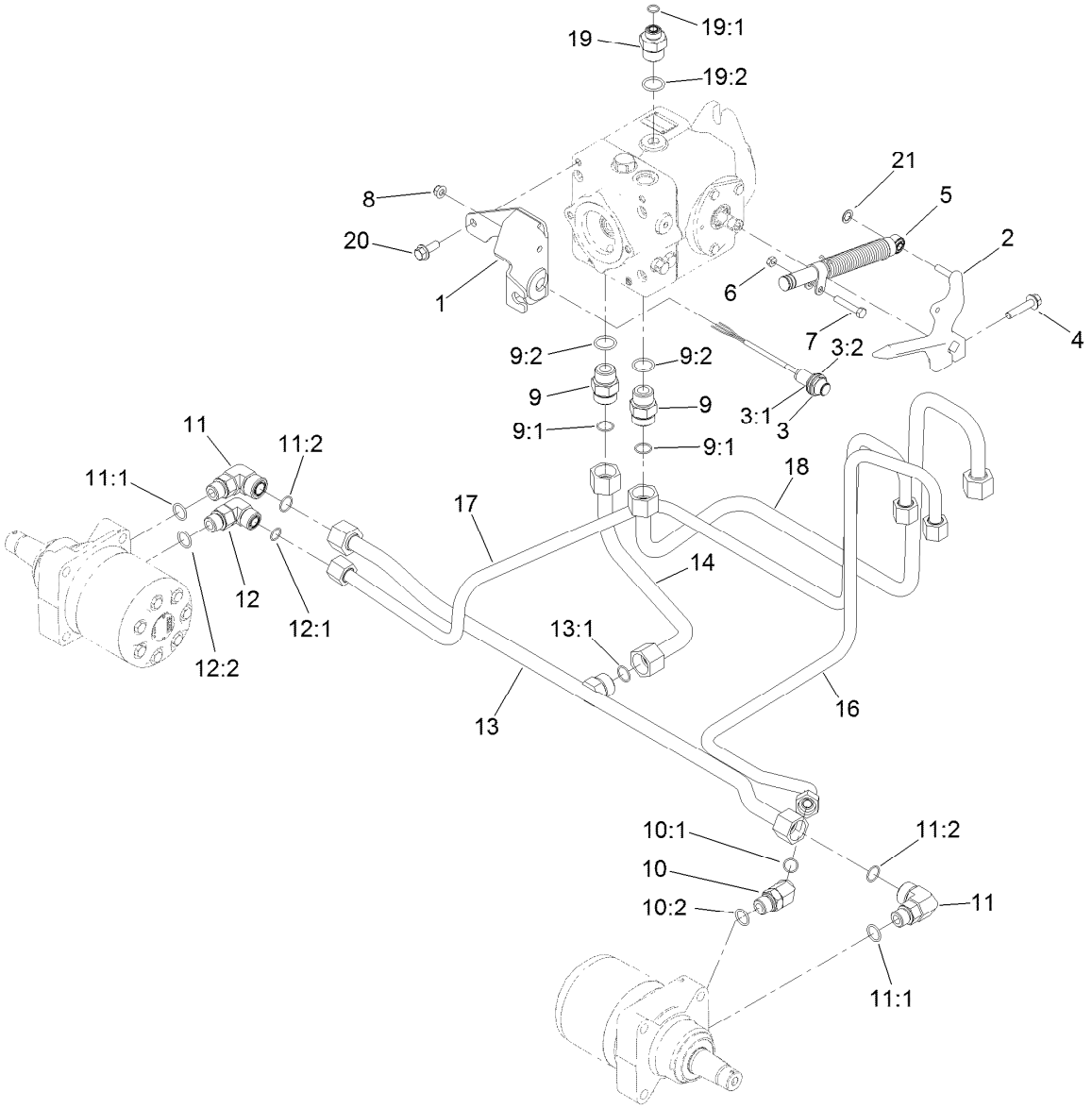

Traction Hydraulic Assembly

Ref.	Part Number	Qty.	Description
1	139-6195-0P	1	Bracket-Cable Support [primed]
2	138-6378	1	Lever-Pump
3	115-5300	1	Proximity Switch ASM
3:1	117-3207	2	Nut-Hex
3:2	117-3208	2	Washer-Lock, Internal Tooth
4	3234-19	1	Screw-HHF
5	140-6248	1	Damper
6	3218-2	1	Nut-Hex Jam
7	322-10	1	Screw-HH
8	104-8300	1	Nut-HF, NI
9	340-9	2	Fitting-STR
9:1	237-58	1	O-Ring
9:2	237-81	1	O-Ring
10	340-14	1	Fitting-HYD, 45 DEG
10:1	237-65	1	O-Ring
10:2	237-80	1	O-Ring
11	340-16	2	Fitting-HYD, 90 DEG
11:1	237-80	1	O-Ring
11:2	237-58	1	O-Ring
12	340-17	1	Fitting-Elbow, 90 DEG
12:1	237-65	1	O-Ring
12:2	237-80	1	O-Ring
13	138-0340	1	Hydraulic Tube ASM
13:1	237-58	1	O-Ring
14	138-0341	1	Hydraulic Tube ASM
16	138-0345	1	Hydraulic Tube ASM
17	138-0346	1	Hydraulic Tube ASM
18	138-0339	1	Hydraulic Tube ASM
19	100-4240	1	Fitting-STR
19:1	237-30	1	O-Ring
19:2	237-81	1	O-Ring
20	3234-42	2	Screw-HHF
21	32151-72	1	Ring-Retaining

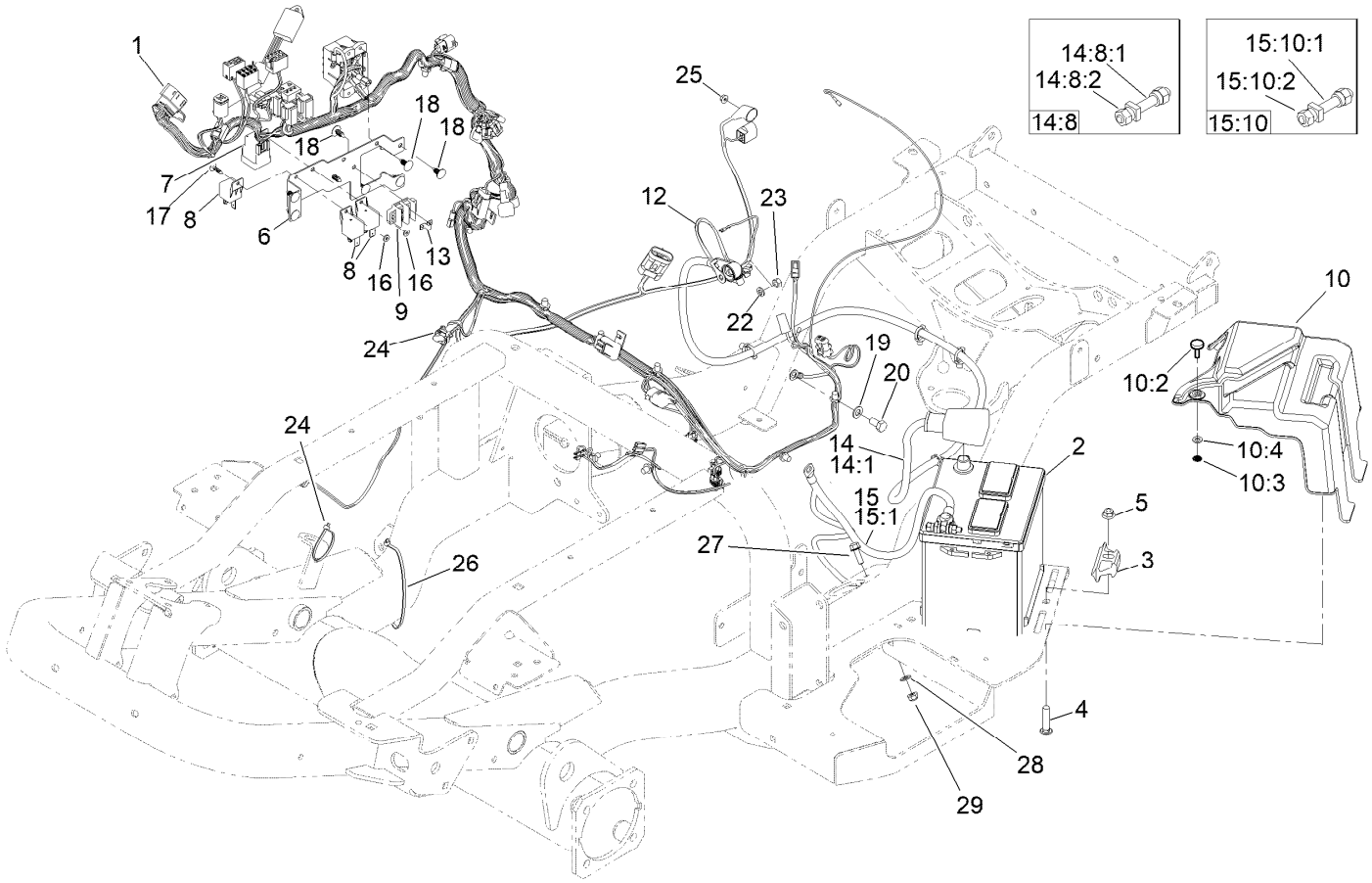

Electrical Assembly

Ref.	Part Number	Qty.	Description
1	122-1657	1	Harness-Wire
2	106-5187	1	Battery, 525 CCA W/O Electrolyte
3	138-6335	1	Retainer-Battery
4	3231-29	1	Screw-CARR
5	104-8301	1	Nut-HF, NI
6	138-7467-0P	1	Bracket-Electrical
7	99-7430	1	Relay-Mini
8	99-7435	3	Relay
9	42862	1	Block-Terminal, Ground
10	140-9010	1	Battery Cover ASM
10:2	140-9033	1	Knob-Stud
10:3	32115-15	1	Nut-Push
10:4	3256-22	1	Washer-Flat
12	99-3441	1	Harness-Wire, Fusible Link
13	42863	1	Strip-Jumper
14	122-1275	1	Cable-Battery, Positive ASM
14:1	32180-115	1	Panduit, Cable Tie ●

Ref.	Part Number	Qty.	Description
14:8		1	Bolt ASM ■
14:8:1	32180-107	1	Bolt-Clamp, Battery
14:8:2	32180-108	2	Nut-Clamp, Battery
15	122-1276	1	Cable-Battery, Negative ASM
15:1	32180-115	1	Panduit, Cable Tie ●
15:10		1	Bolt ASM ■
15:10:1	32180-107	1	Bolt-Clamp, Battery
15:10:2	32180-108	2	Nut-Clamp, Battery
16	3256-21	2	Washer-Flat
17	125-8067	2	Plug-Plastic
18	117-2382	8	Plug-Plastic
19	33095-00	1	Washer-Flat
20	33115-020	1	Screw-HH
22	3253-4	1	Washer-Lock
23	33014-00	1	Nut-Hex
24	3290-378	2	Tie-Cable
25	33003-00	1	Nut-HF

● Not illustrated

■ Not serviced separately

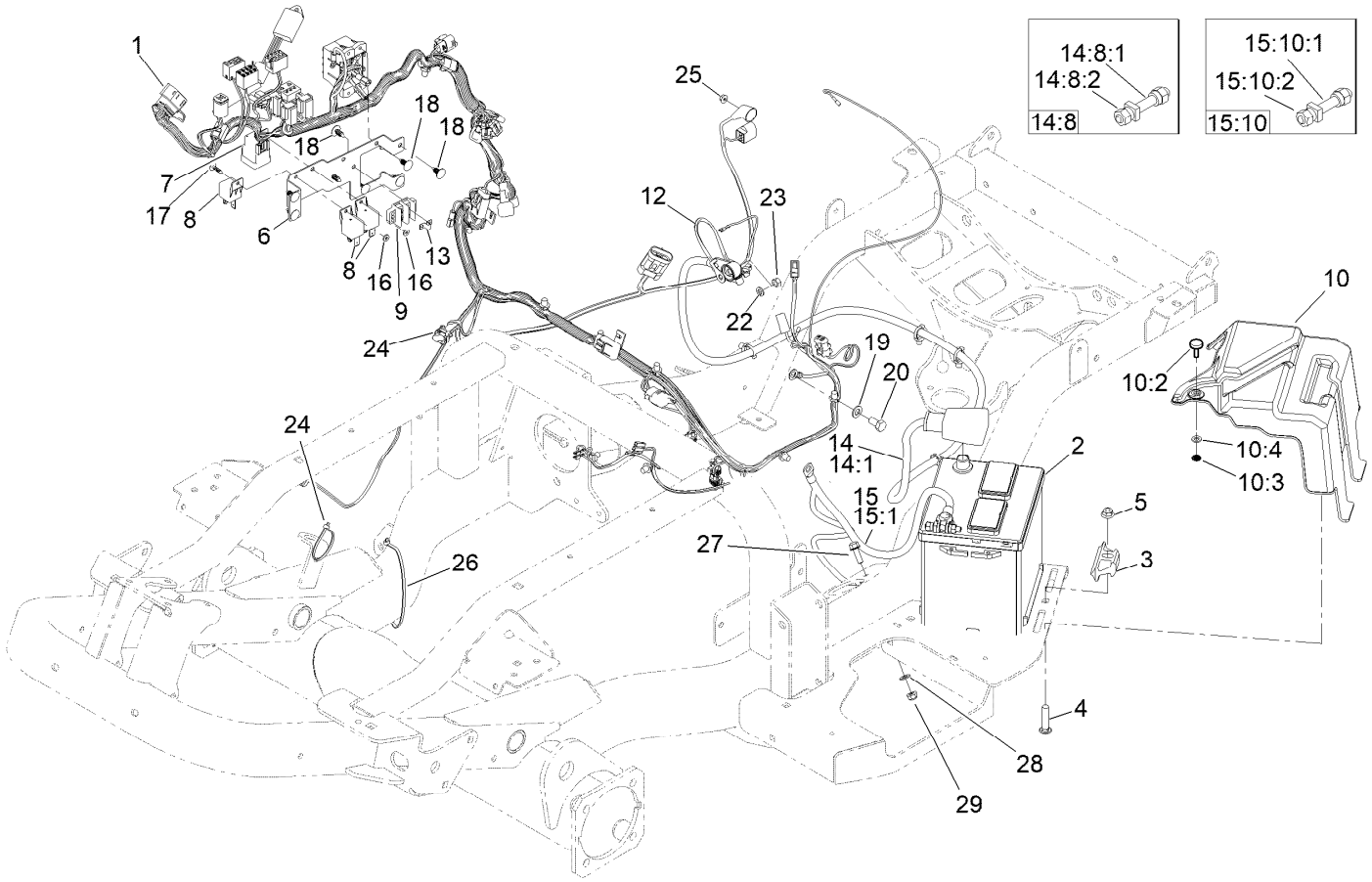

Electrical Assembly (continued)

Ref.	Part Number	Qty.	Description
26	3290-379	1	Tie-Cable
27	3234-29	1	Screw-HHF

Ref.	Part Number	Qty.	Description
28	120-9683	1	Washer-Plain
29	104-8300	1	Nut-HF, NI

● Not illustrated

■ Not serviced separately

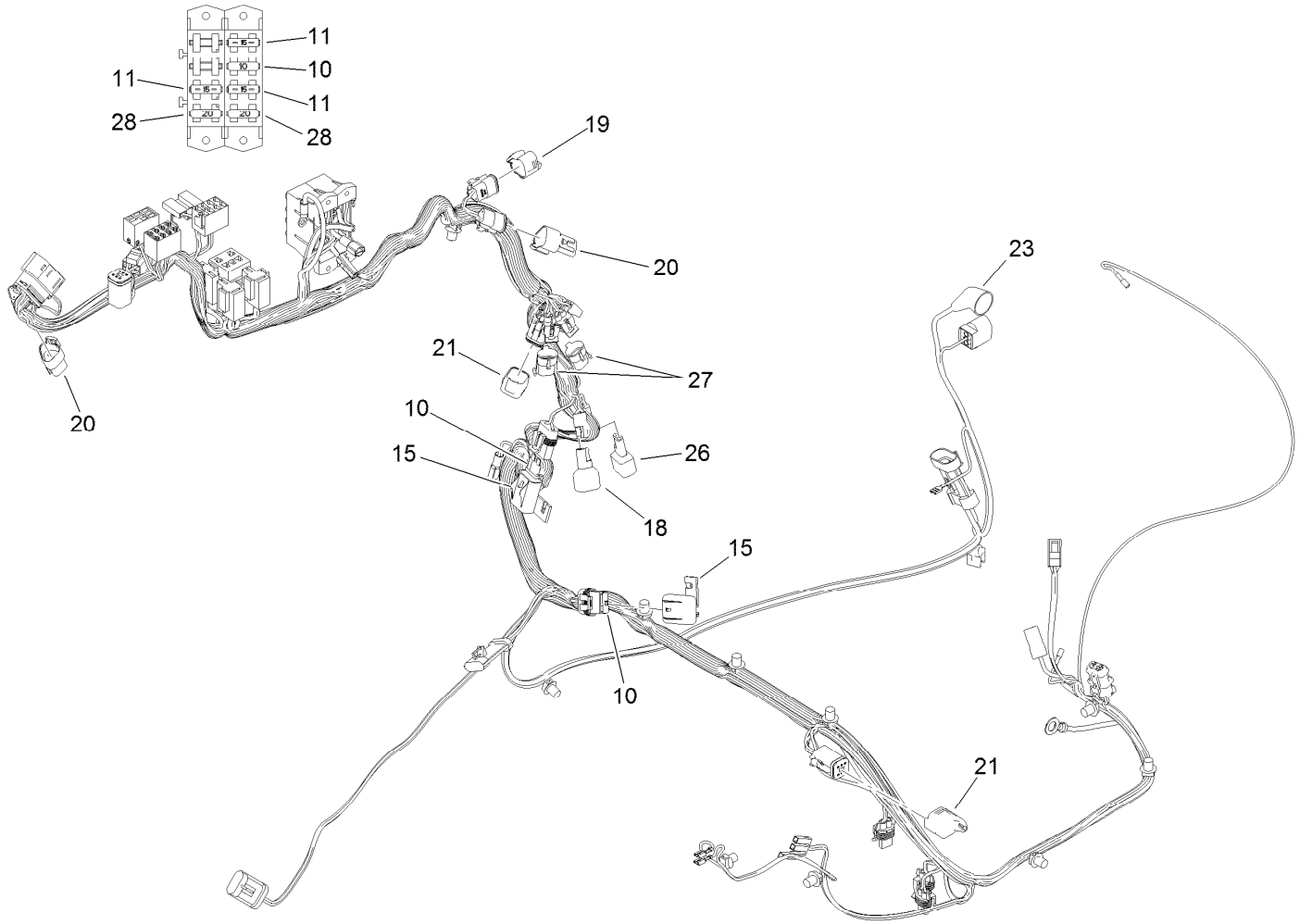

Wire Harness Assembly No. 122-1657

Ref.	*Part Number*	*Qty.*	*Description*
10	218-578	3	Fuse-Blade, 10 Amp
11	109355	3	Fuse-Blade, 15 Amp
15	32180-019	2	Cover-Fuse, Single
18	108-9493	1	Diode-Tvs
19	32180-089	1	Cap-Plug, 3 Way
20	32180-043	2	Resistor-120 Ohm
21	32180-156	2	Cap-Plug, 6 Way
23	32180-017	1	Insulater-Terminal, Black
26	104-4022	1	Resistor-75 Ohm
27	32180-056	2	Cap
28	109101	2	Fuse-Blade, 20 Amp

Cylinder Block Assembly

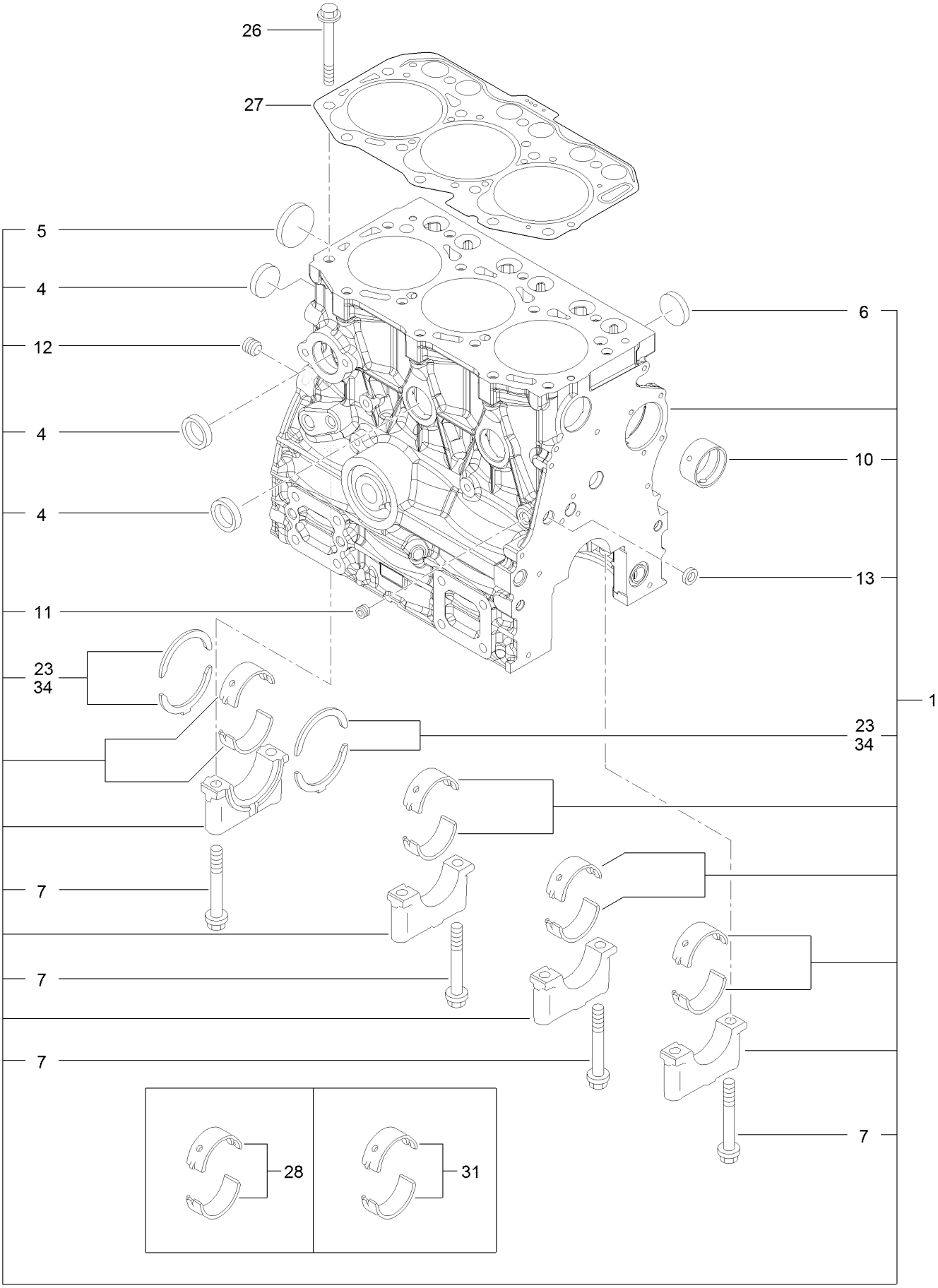

Cylinder Block Assembly (continued)

Ref.	Part Number	Qty.	Description
1	135-4030	1	Cylinder Block ASM
4	135-4031	4	Plug-Cup
5	135-4032	1	Plug-Dish
6	135-4033	3	Plug-Cup
7	135-4034	8	Bolt-Cap
10	135-4035	1	Bushing-Camshaft
11	125-6969	1	Plug
12	125-6973	1	Plug
13	125-7237	1	Plug
23	135-4036	2	Thrust Bearing ASM
26	135-4037	14	Bolt-Head, Cylinder
27	135-4038	1	Head Gasket Set
28	135-4039	1	Main Bearing ASM
31	135-4040	2	Main Bearing ASM
34	135-4041	2	Bearing-Thrust

Gear Housing Assembly

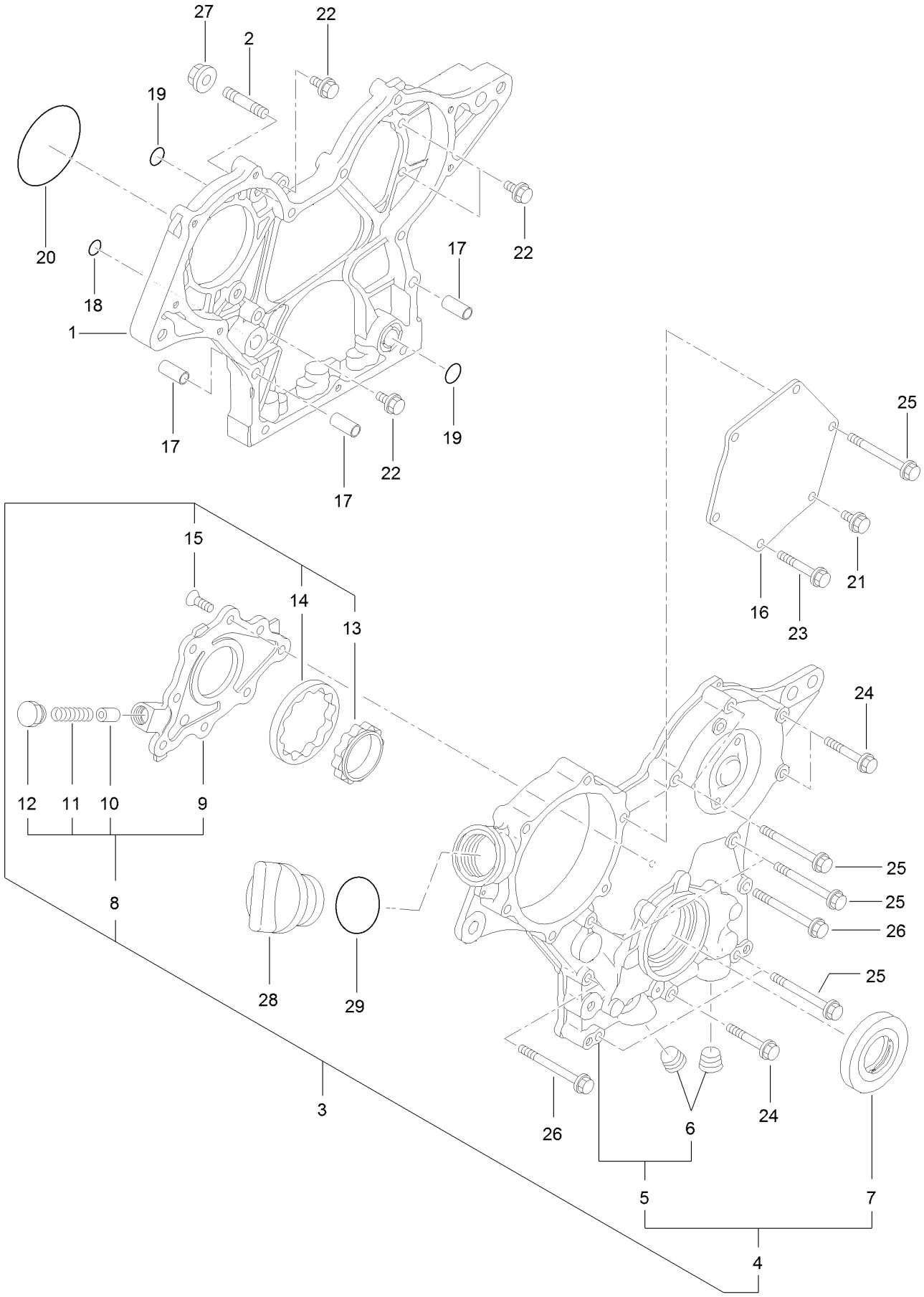

Gear Housing Assembly (continued)

Ref.	Part Number	Qty.	Description
1	135-4042	1	Case-Gear
2	135-4043	3	Bolt-Stud
3	135-4044	1	Gear Case Cover ASM
4	135-4045	1	Gear Case Cover ASM
5	135-4046	1	Cover-Case, Gear
6	133-6798	2	Plug
7	135-4047	1	Seal-Oil
8	135-4048	1	Cover ASM
9	135-4049	1	Cover-Pump
10	135-4050	1	Valve-Relief
11	135-4051	1	Spring
12	135-4052	1	Plug
13	135-4053	1	Rotor-Inner
14	135-4054	1	Rotor-Outer
15	135-4055	8	Screw
16	135-4056	1	Cover-Pump
17	135-4057	4	Dowel-Pipe
18	127-2973	1	O-Ring
19	135-4058	3	O-Ring
20	125-6957	1	O-Ring
21	125-7206	1	Bolt
22	125-7208	4	Bolt
23	125-7211	4	Bolt
24	125-7211	3	Bolt
25	135-4059	7	Bolt
26	136-8257	2	Bolt
27	125-7229	3	Nut
28	125-6972	1	Cover-Filler
29	125-7197	1	O-Ring

Mounting Flange and Oil Sump Assembly

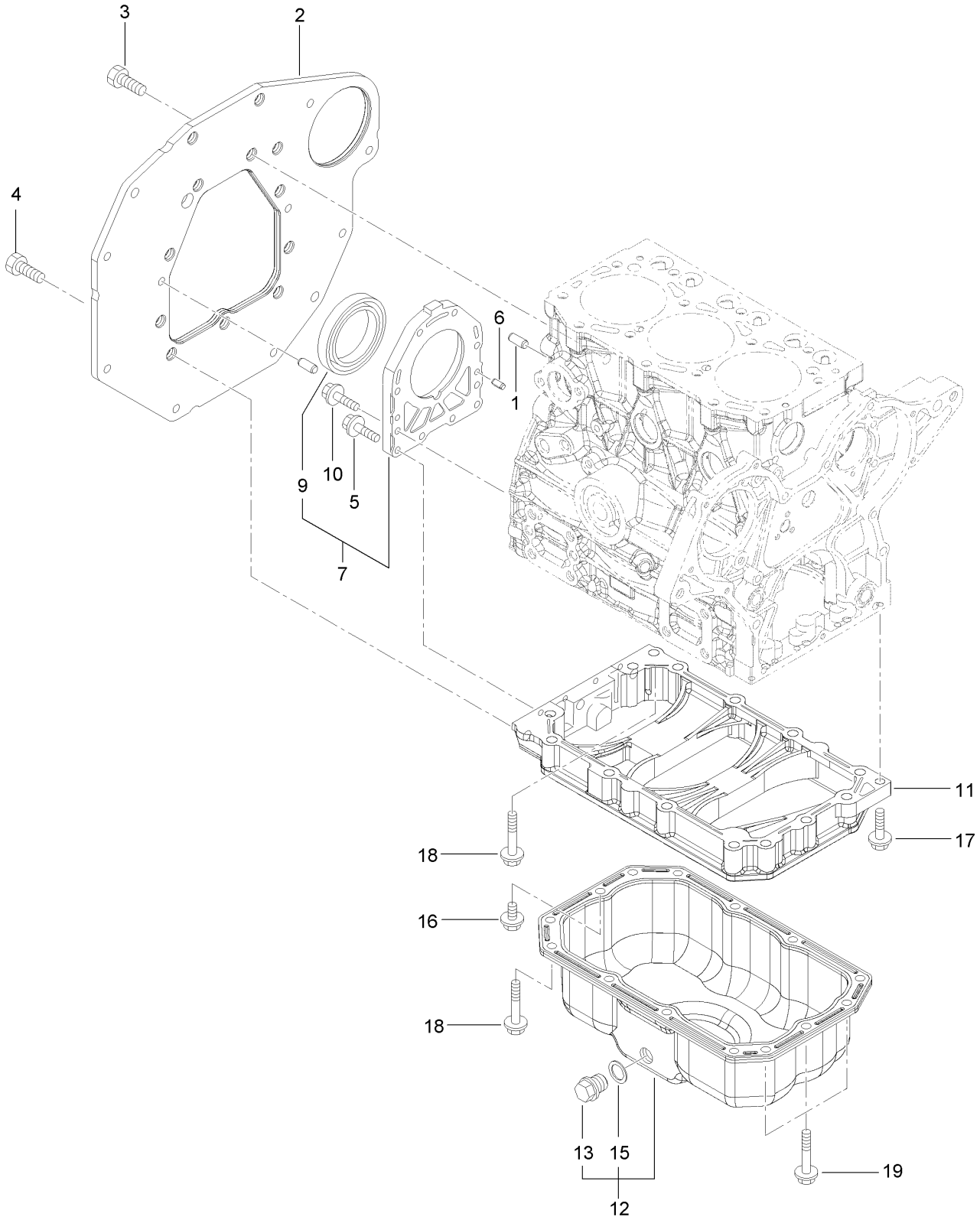

Mounting Flange and Oil Sump Assembly (continued)

Ref.	Part Number	Qty.	Description
1	125-6995	2	Pin
2	140-7156	1	Flange-Mounting
3	140-7181	9	Bolt
4	125-7226	3	Bolt
5	140-7152	4	Bolt
6	135-4062	2	Pin-Parallel
7	140-7160	1	Case Oil Seal ASM
9	135-4064	1	Seal-Oil
10	135-4065	6	Bolt
11	135-4066	1	Spacer-Pan, Oil
12	134-1398	1	Oil Pan ASM
13	135-4068	1	Plug
15	136-8236	1	Washer-Seal
16	125-7212	1	Bolt
17	125-7216	1	Bolt
18	125-7219	11	Bolt
19	125-7220	3	Bolt

Cylinder Head and Cover Assembly

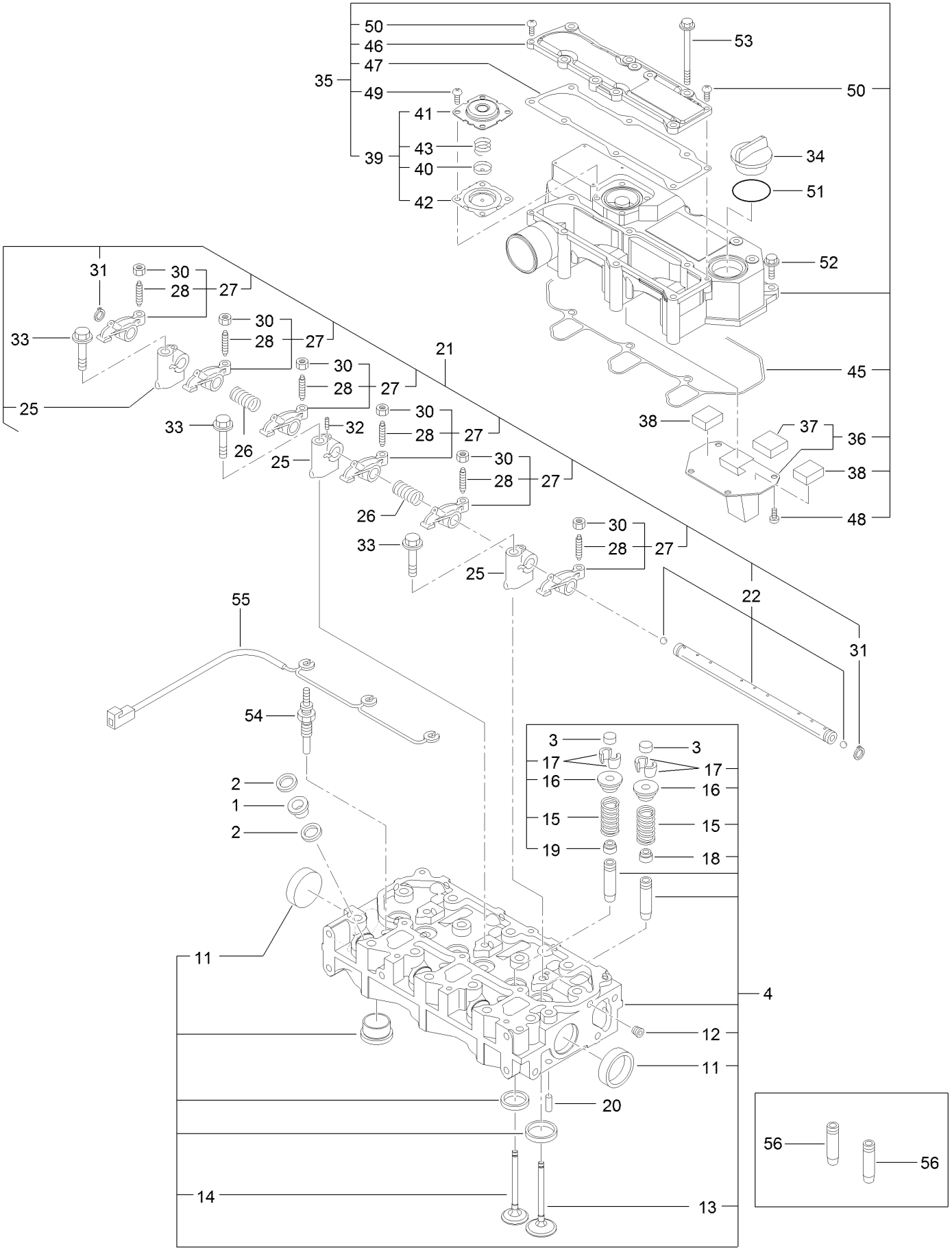

Cylinder Head and Cover Assembly (continued)

Ref.	Part Number	Qty.	Description
1	135-4069	3	Protector-Nozzle
2	135-4070	6	Gasket-Nozzle
3	135-4071	6	Cap-Valve
4	134-4001	1	Cylinder Head ASM
11	135-4073	2	Plug-Cup
12	133-6797	1	Plug
13	135-4074	3	Valve-Suction
14	135-4075	3	Valve-Exhaust
15	135-4076	6	Spring-Valve
16	125-7054	6	Retainer
17	125-6914	12	Cotter
18	125-6915	3	Seal-Stem, Valve
19	125-6916	3	Seal-Stem, Valve
20	125-7184	2	Pin-Spring
21	135-4077	1	Rocker Support ASM
22	135-4078	1	Rocker Shaft ASM
25	135-4079	3	Support-Arm, Rocker
26	135-4080	2	Spring-Rocker
27	135-4081	6	Rocker Arm ASM
28	125-7013	6	Screw-Adjust, Valve
30	125-7014	6	Nut
31	135-7082	2	Ring
32	135-4083	1	Screw
33	125-7218	3	Bolt
34	125-6972	1	Cover-Filler
35	134-1402	1	Cylinder Head Cover ASM
36	135-4085	1	Plate-Baffle
37	135-4086	1	Baffle-Breather
38	135-4086	2	Baffle-Breather
39	135-4088	1	Diaphragm ASM
40	135-4089	1	Plate-Diaphragm
41	135-4090	1	Cover-Diaphragm
42	135-4091	1	Diaphragm
43	135-4092	1	Spring-Diaphragm
45	135-4093	1	Gasket-Cover, Cylinder Head
46	134-1401	1	Cover-Head, Cylinder
47	135-4095	1	Gasket
48	125-7186	4	Screw
49	125-7186	4	Screw
50	127-3168	2	Screw
51	125-7197	1	O-Ring
52	125-7209	3	Bolt
53	135-4096	6	Bolt
54	135-4291	3	Plug-Glow
55	134-1443	1	Connector-Plug, Glow
56	125-6917	6	Guide

Exhaust Manifold Assembly

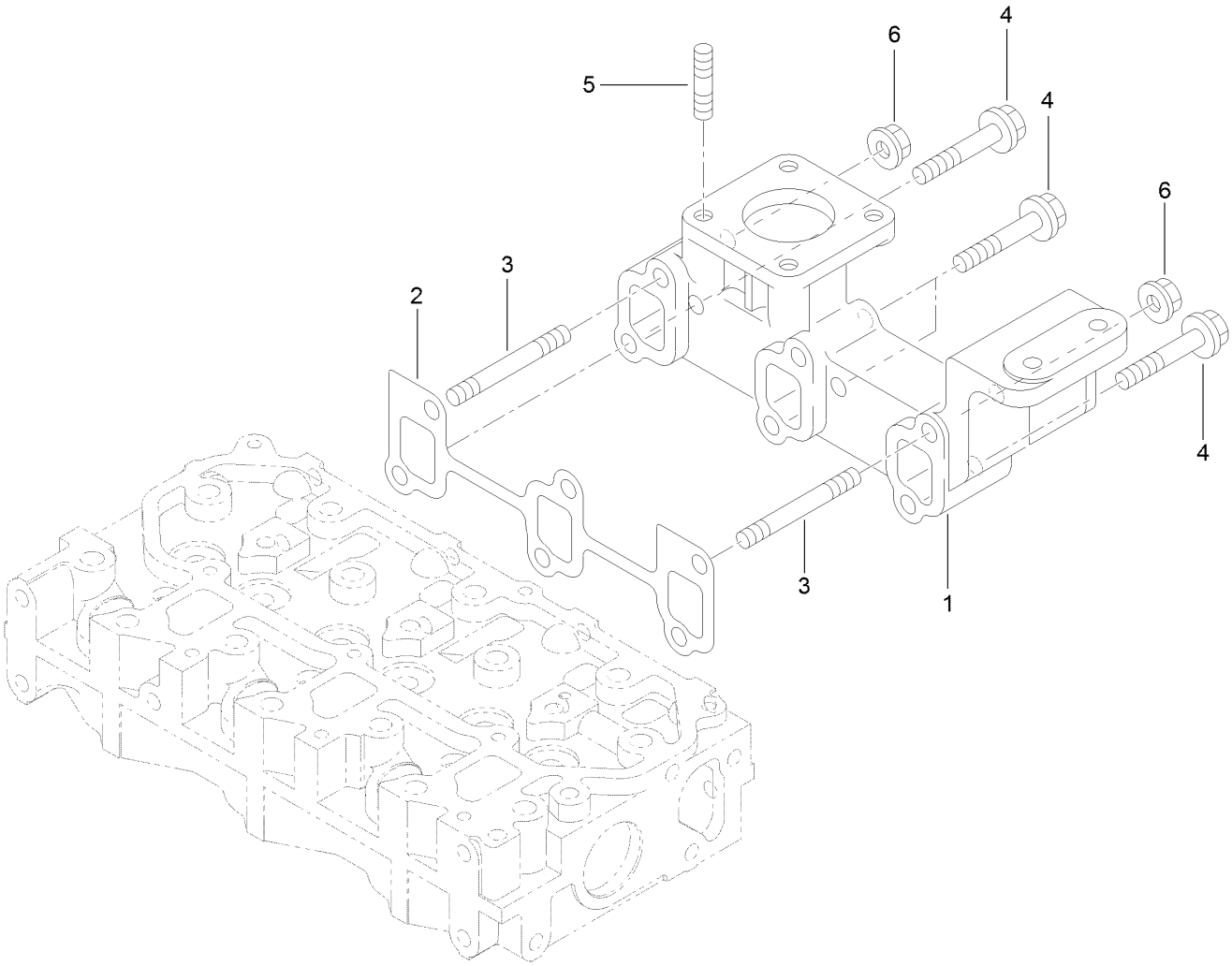

Exhaust Manifold Assembly (continued)

Ref.	Part Number	Qty.	Description
1	140-7161	1	Manifold-Exhaust
2	135-4107	1	Gasket-Manifold, Exhaust
3	134-1404	2	Bolt-Stud
4	133-6714	4	Bolt
5	125-6906	4	Stud
6	125-7229	2	Nut

Camshaft and Driving Gear Assembly

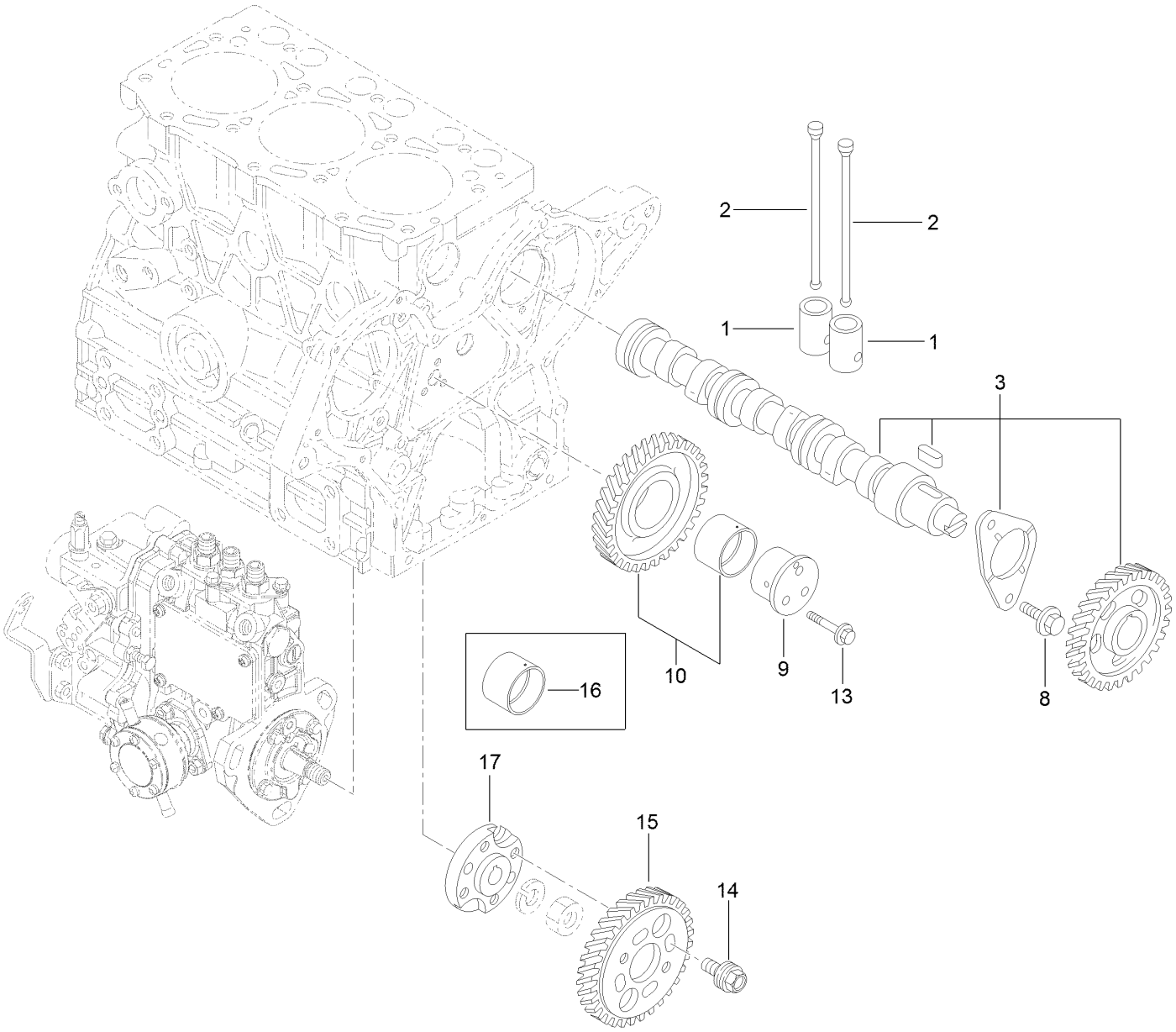

Camshaft and Driving Gear Assembly (continued)

Ref.	Part Number	Qty.	Description
1	135-4108	6	Tappet
2	135-4109	6	Push-Rod
3	135-4110	1	Camshaft ASM
8	125-7206	2	Bolt
9	135-4145	1	Shaft-Idle
10	135-4146	1	Idle Gear ASM
13	135-4147	3	Bolt
14	125-7020	4	Bolt
15	135-4148	1	Gear-Pump
16	135-4149	1	Bushing-Gear, Idle
17	135-4150	1	Flange

Crankshaft and Piston Assembly

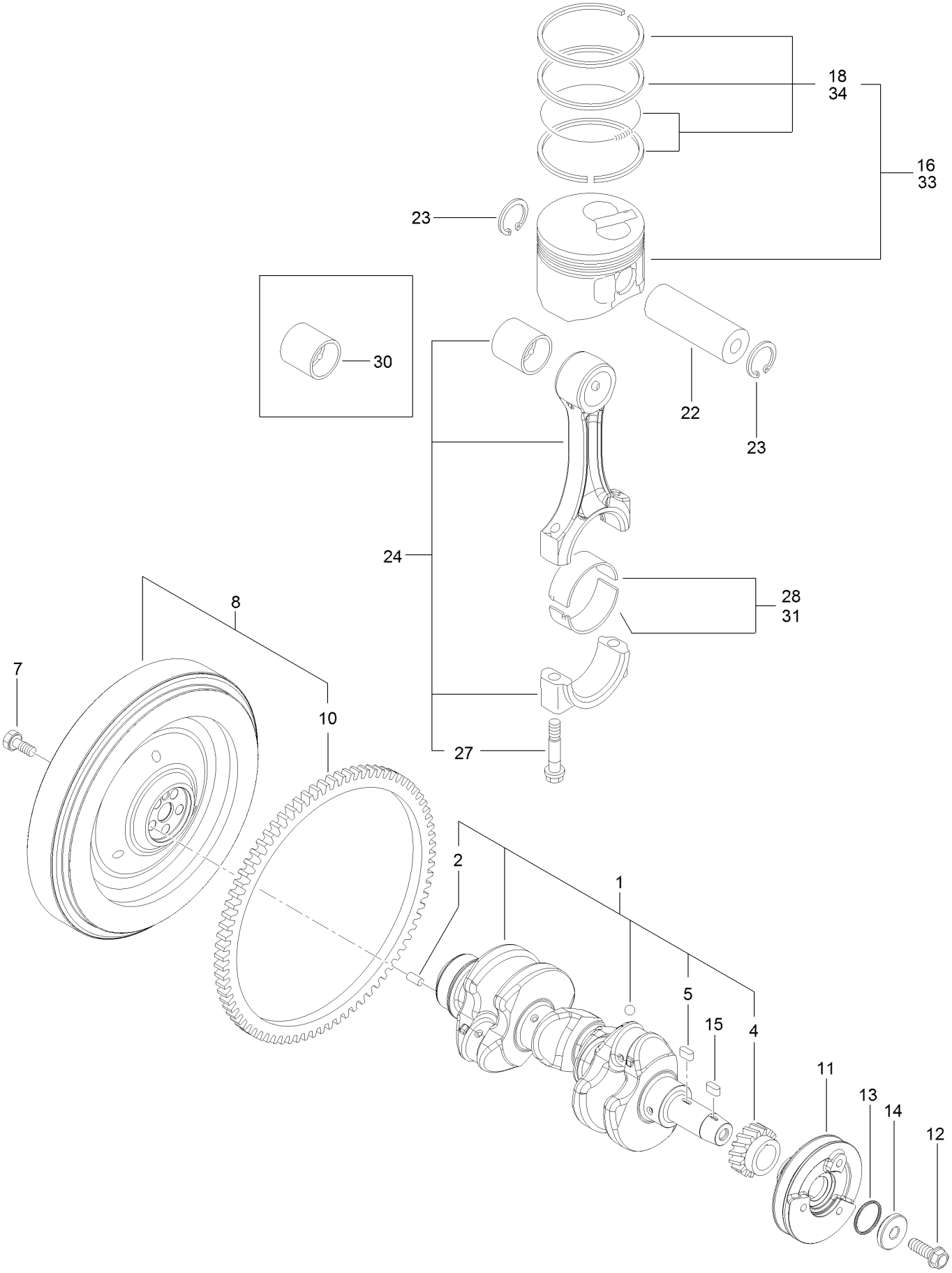

Crankshaft and Piston Assembly (continued)

Ref.	Part Number	Qty.	Description
1	135-4152	1	Crankshaft ASM
2	125-6995	1	Pin
4	135-4153	1	Gear-Crankshaft
5	135-4154	1	Key
7	125-6951	5	Bolt
8	140-7164	1	Flywheel ASM
10	125-6943	1	Gear
11	135-4158	1	V-Pulley, Crankshaft
12	135-4159	1	Bolt-Flange
13	134-4004	1	Packing-Washer
14	135-4161	1	Washer
15	135-4154	1	Key

Ref.	Part Number	Qty.	Description
16	135-4163	3	Piston ASM
18	135-4164	3	Ring ASM
22	135-4165	3	Pin-Piston
23	135-4166	6	Ring
24	134-4005	3	Connecting Rod ASM
27	135-4168	6	Bolt-Rod, Connecting
28	135-4169	3	Bearing-Pin, Crank
30	134-4006	3	Bushing-Pin, Piston
31	135-4171	3	Bearing-Pin (0.25)
33	134-4007	3	Piston ASM (0.25 Os)
34	135-4173	3	Ring ASM

Lubrication and Oil System Assembly

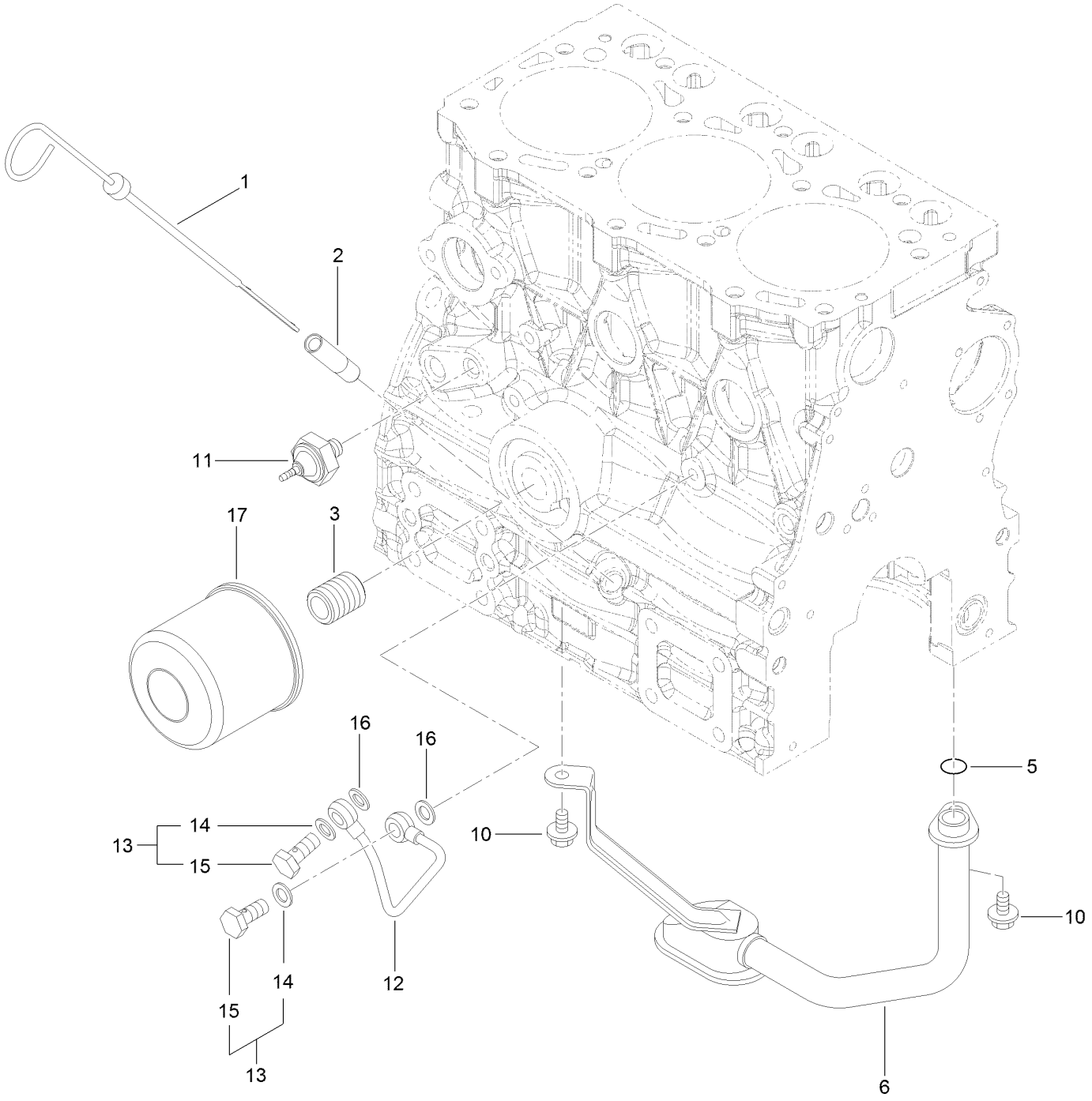

Lubrication and Oil System Assembly (continued)

Ref.	Part Number	Qty.	Description
1	134-1413	1	Dipstick
2	125-6954	1	Guide-Dipstick
3	134-4008	1	Stud
5	135-4178	1	O-Ring
6	134-1414	1	Oil Inlet Pipe ASM
10	125-7205	2	Bolt
11	134-1377	1	Switch-Hydraulic
12	135-4182	1	Pipe-Oil
13	125-6988	2	Joint Bolt ASM
14	125-7174	2	Washer-Seal
15	125-7194	2	Bolt-Joint
16	125-7174	2	Washer-Seal
17	135-4181	1	Filter-Oil, Engine

Cooling Water System Assembly

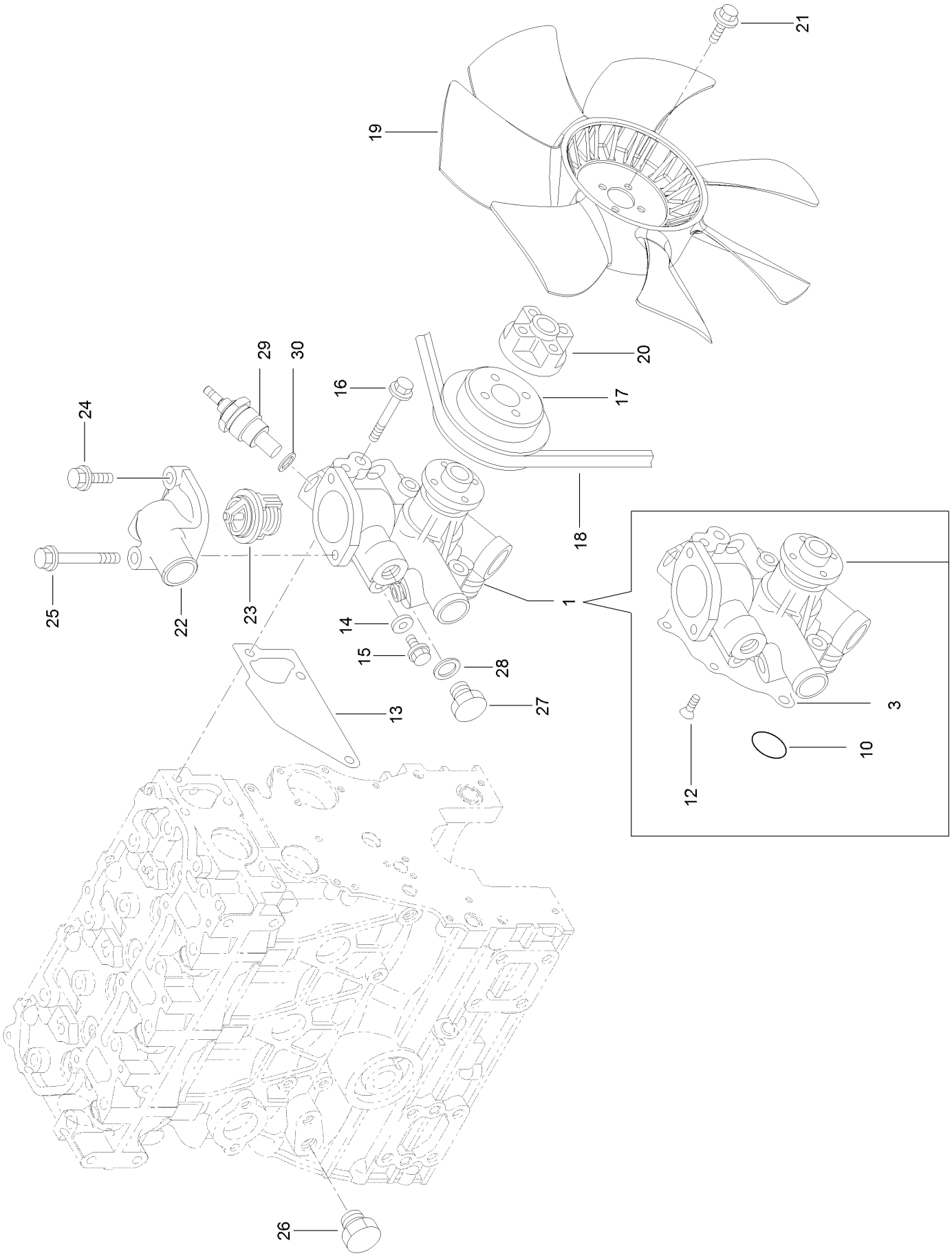

Cooling Water System Assembly (continued)

Ref.	Part Number	Qty.	Description
1	134-4009	1	CW Pump ASM
3	135-4188	1	Gasket
10	135-4190	1	O-Ring
12	133-2504	4	Screw
13	135-4193	1	Gasket-Pump, Water
14	125-7192	1	Gasket
15	125-7212	1	Bolt
16	125-7220	3	Bolt
17	134-1417	1	V-Pulley
18	140-7179	1	V-Belt
19	140-7157	1	Fan-Cooling

Ref.	Part Number	Qty.	Description
20	131-2705	1	Spacer
21	131-2739	4	Bolt
22	135-4199	1	Cover-Thermostat
23	135-4200	1	Thermostat
24	135-4201	1	Bolt
25	135-4202	1	Bolt
26	125-7171	1	Plug-Drain
27	125-6953	1	Plug
28	125-6979	1	Gasket
29	134-3128	1	Sensor-Temperature
30	134-4010	1	Gasket

Fuel Injection Pump Assembly

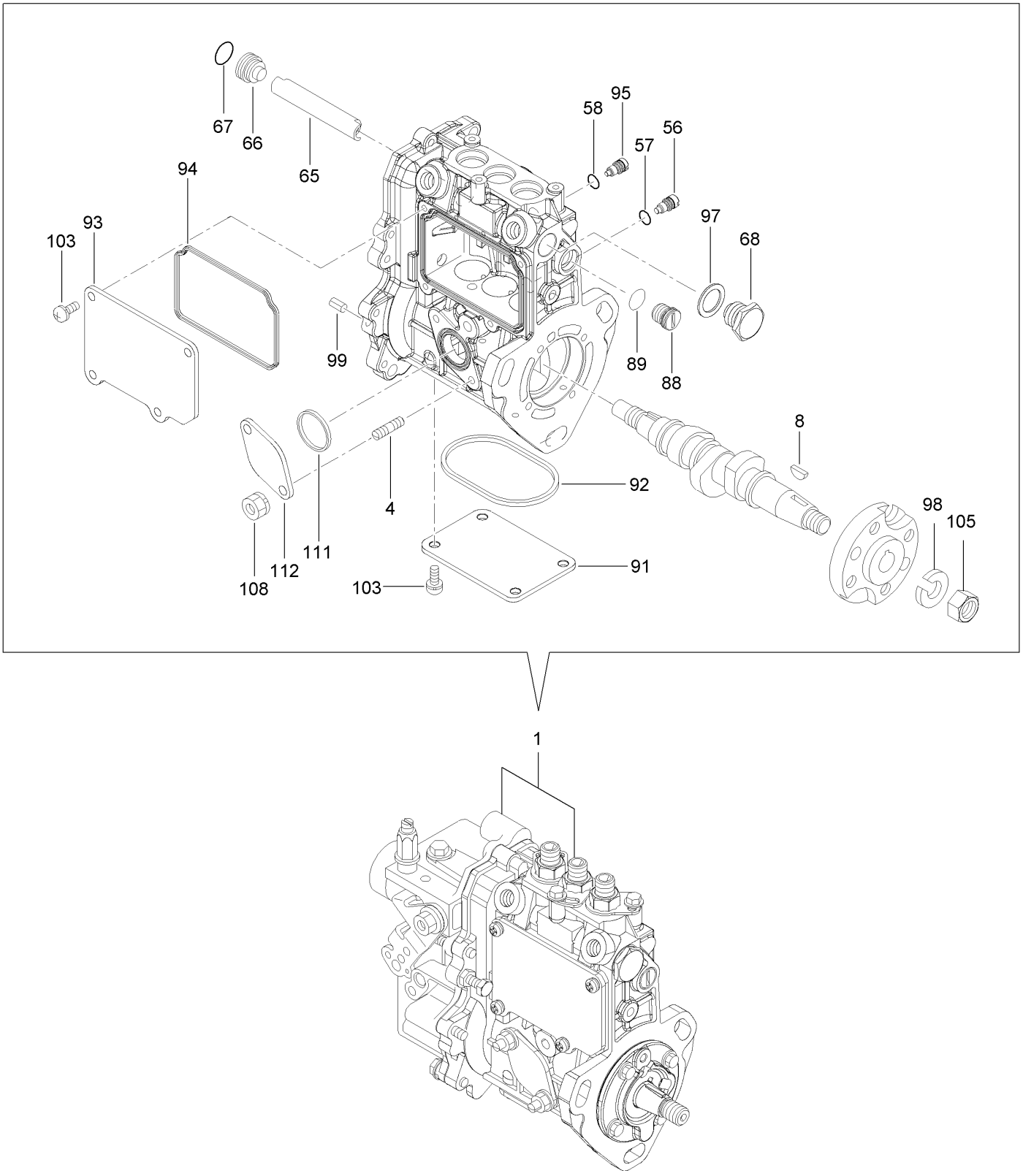

Fuel Injection Pump Assembly (continued)

Ref.	Part Number	Qty.	Description
1	140-7183	1	Fuel Injection Equipment ASM
4	135-4205	2	Bolt-Stud
8	135-4206	1	Key-Feather, Woodruff
56	125-7156	3	Stopper
57	135-4207	3	O-Ring
58	135-4207	1	O-Ring
65	135-4209	1	Deflector
66	135-4210	1	Plug-Deflector
67	135-4211	1	O-Ring
68	135-4212	1	Plug-Deflector
88	135-4213	1	Plug-Rack
89	135-4214	1	O-Ring
91	135-4215	1	Cover
92	135-4216	1	Gasket
93	135-4217	1	Cover
94	135-4218	1	Gasket
95	135-4219	1	Stopper-Rack
97	136-8236	1	Washer-Seal
98	135-4220	1	Washer-Spring
99	125-7183	2	Pin-Spring
103	135-4221	8	Screw
105	133-2506	1	Nut
108	135-4222	2	Nut
111	135-4223	1	Gasket
112	135-4224	1	Cover-Pump

Governor Assembly

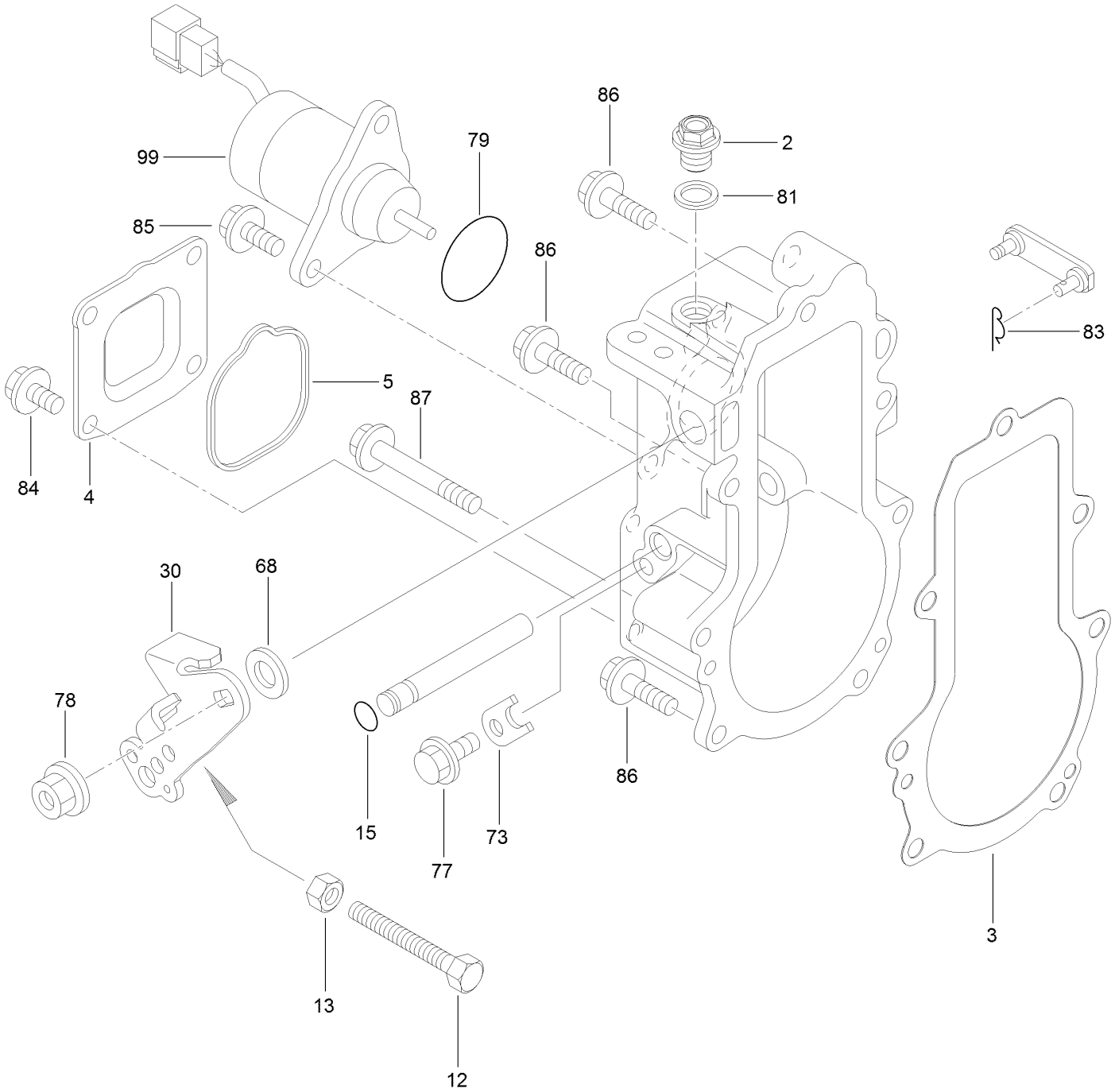

Governor Assembly (continued)

Ref.	Part Number	Qty.	Description
2	135-4226	1	Plug
3	135-4227	1	Gasket
4	140-7159	1	Cover-Case, Governor
5	134-1435	1	Gasket
12	134-4013	1	Bolt-Limit, Idle
13	134-4014	1	Nut
15	135-4207	1	O-Ring
30	134-1385	1	Lever-Control
68	134-1518	1	Shim Set
73	134-1395	1	Stopper-Shaft

Ref.	Part Number	Qty.	Description
77	125-7205	1	Bolt
78	134-4012	1	Nut-M8
79	134-1520	1	O-Ring
81	125-7175	1	Washer-Seal
83	134-1529	1	Pin
84	125-7205	4	Bolt
85	125-7207	2	Bolt
86	125-7209	4	Bolt
87	136-8256	3	Bolt
99	140-7172	1	Stop-Solenoid

Fuel Injection Valve Assembly

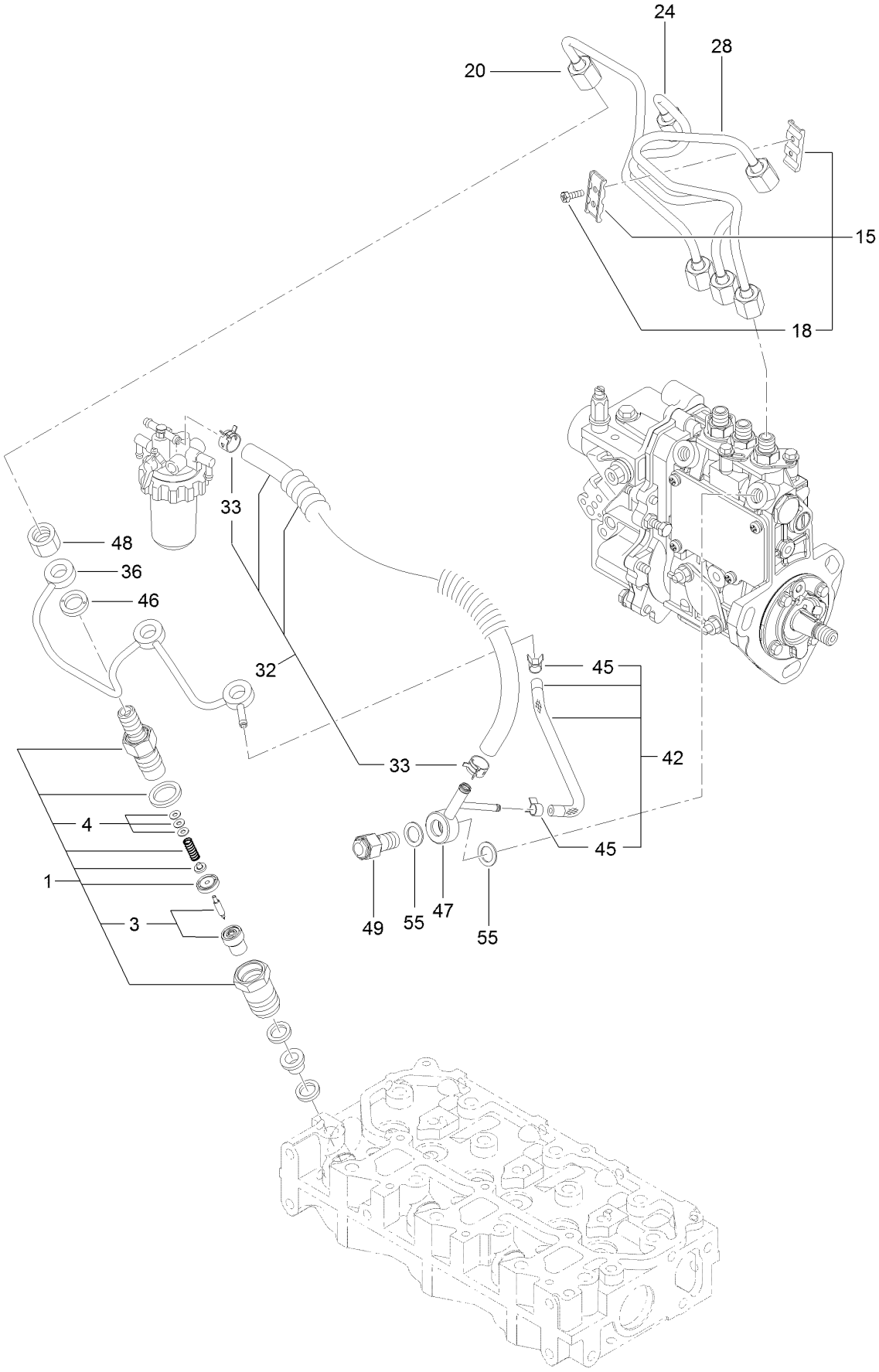

Fuel Injection Valve Assembly (continued)

Ref.	Part Number	Qty.	Description
1	135-4229	3	Nozzle ASM
3	135-4230	3	Nozzle ASM
4	135-4231	3	Adjusting Shim Set
15	134-1488	1	Retainer-Pipe
18	125-7027	2	Bolt
20	135-4233	1	Pipe ASM (Inj No1)
24	135-4234	1	Pipe ASM (Inj No2)
28	135-4235	1	Pipe ASM (Inj No3)
32	140-7154	1	Fuel Pipe ASM
33	140-7167	2	Clamp-Hose (11.5)
36	134-1431	1	Return Pipe ASM
42	140-7155	1	Fuel Pipe ASM
45	125-6970	2	Clip
46	135-4237	3	Gasket
47	135-4239	1	Joint-Over Flow
48	135-4240	3	Nut-Nozzle
49	135-4241	1	Check Valve ASM
55	125-7176	2	Washer-Seal

Fuel Pipe Assembly

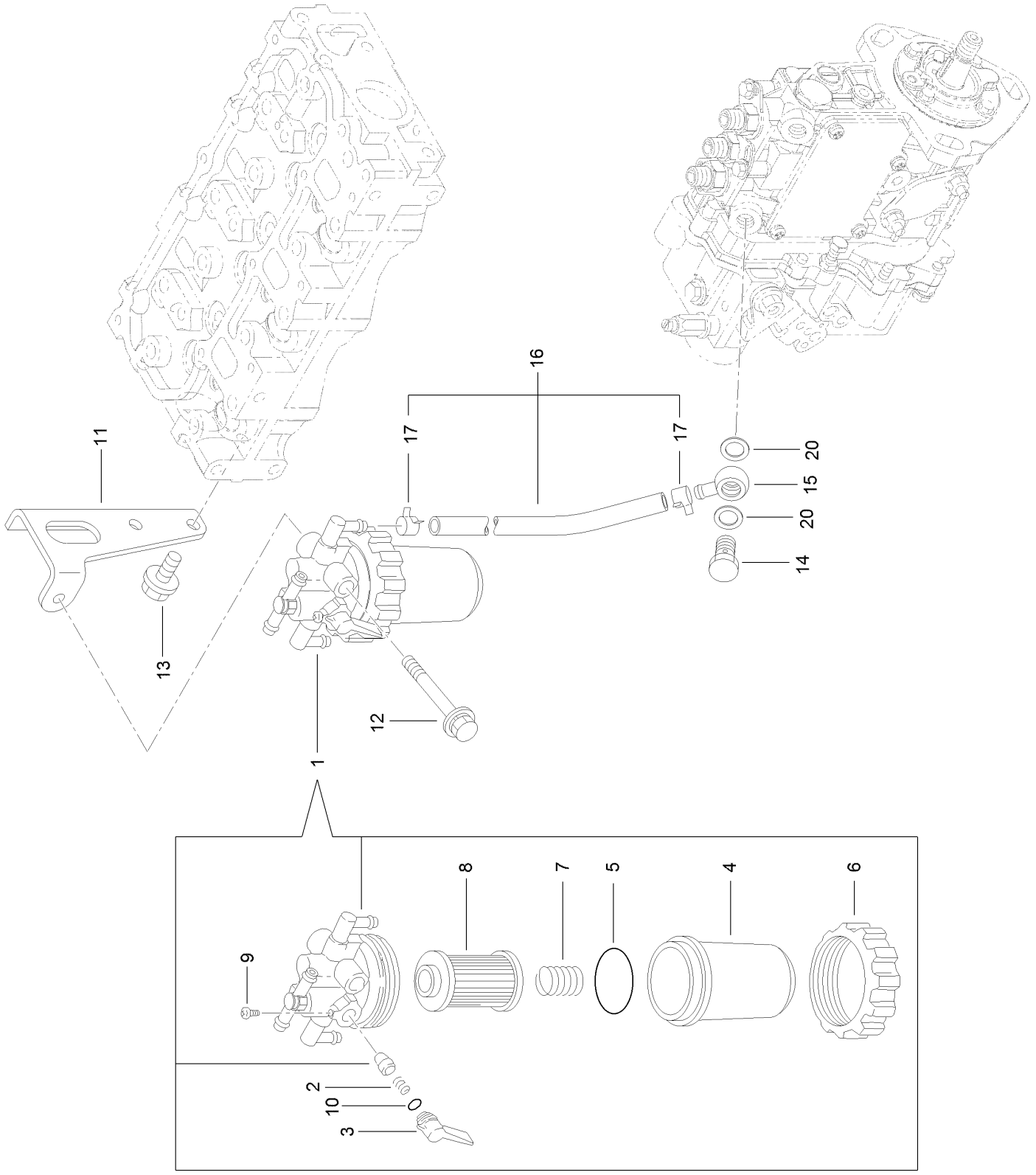

Fuel Pipe Assembly (continued)

Ref.	Part Number	Qty.	Description
1	139-6234	1	Fuel Filter ASM
2	134-1373	1	Spring-Valve, Fuel
3	134-1454	1	Lever-Fuel
4	134-1459	1	Cup-Strainer, Fuel
5	134-1371	1	O-Ring
6	134-1376	1	Ring-Retaining, Cup
7	134-1458	1	Spring-Element
8	134-3085	1	Element-Filter, Fuel
9	134-1375	1	Screw-Pan
10	134-1535	1	O-Ring
11	140-7158	1	Bracket, Filter
12	140-7180	1	Bolt
13	125-7214	2	Bolt
14	135-4242	1	Bolt-Joint, Pipe
15	135-4243	1	Joint-Pipe
16	140-7153	1	Fuel Pipe ASM
17	140-7167	2	Clamp-Hose (11.5)
20	125-7176	2	Washer-Seal

Starter Motor Assembly

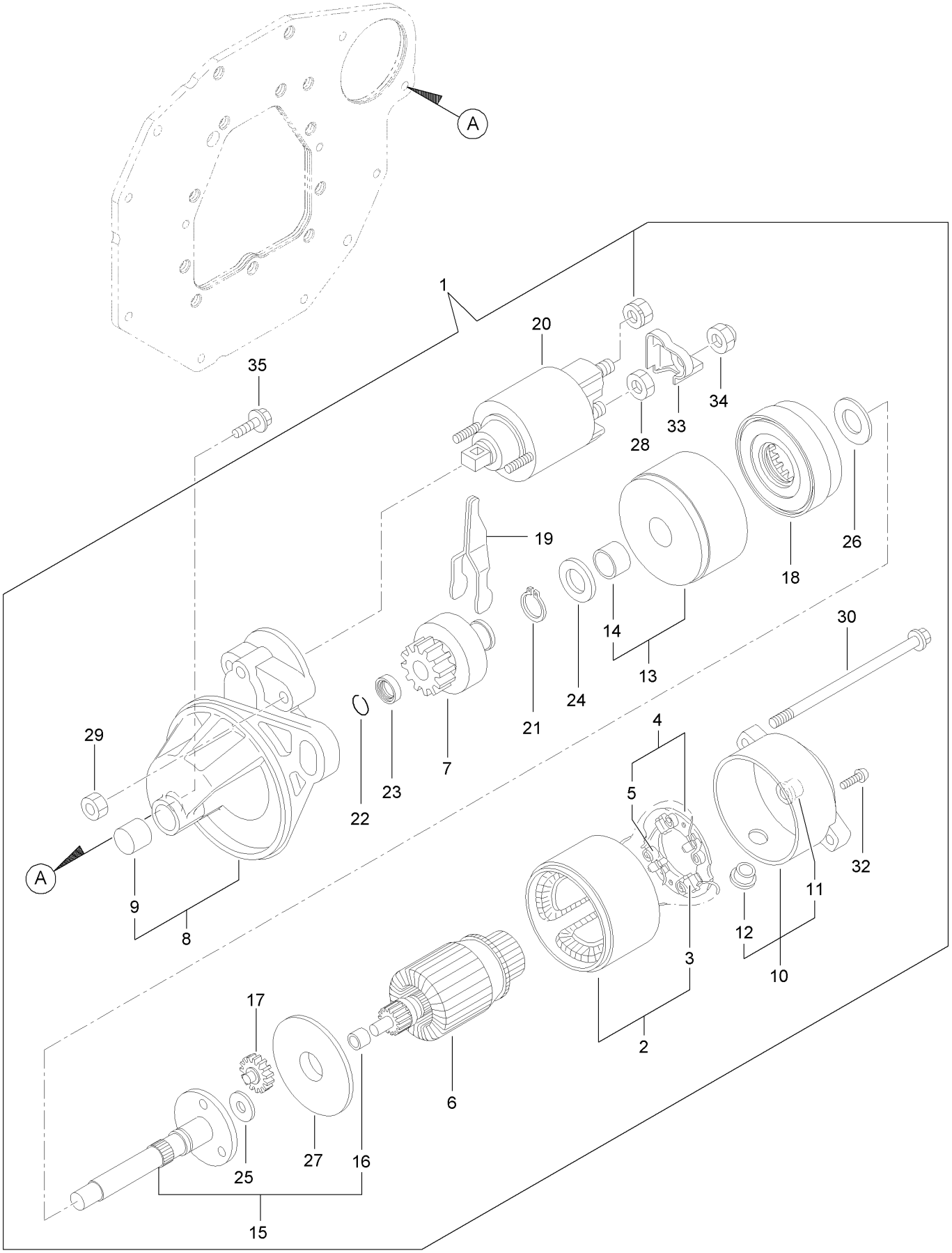

Starter Motor Assembly (continued)

Ref.	Part Number	Qty.	Description
1	135-4244	1	Starter ASM
2	135-4245	1	Yoke ASM
3	135-4246	2	Starter Kit
4	135-4247	1	Holder ASM
5	135-4248	4	Spring
6	135-4249	1	Armature ASM
7	135-4250	1	Clutch ASM
8	135-4251	1	Housing ASM
9	135-4252	1	Bearing-Needle
10	135-4253	1	Frame ASM
11	135-4254	1	Bearing
12	135-4255	1	Cover
13	135-4256	1	Bearing ASM
14	135-4257	1	Bearing
15	135-4258	1	Shaft ASM
16	135-4259	1	Bearing
17	135-4260	3	Gear
18	135-4261	1	Gear
19	135-4262	1	Lever
20	135-4263	1	Switch ASM
21	135-4264	1	Ring
22	135-4265	1	Ring
23	135-4266	1	Nut
24	135-4267	1	Washer
25	135-4268	1	Washer
26	135-4269	1	Washer
27	135-4270	1	Plate
28	135-4271	1	Nut
29	135-4272	2	Nut
30	135-4273	2	Bolt-Through
32	135-4274	2	Screw
33	135-4275	1	Cover-Terminal
34	135-4276	1	Nut
35	133-2496	2	Bolt

Generator Assembly

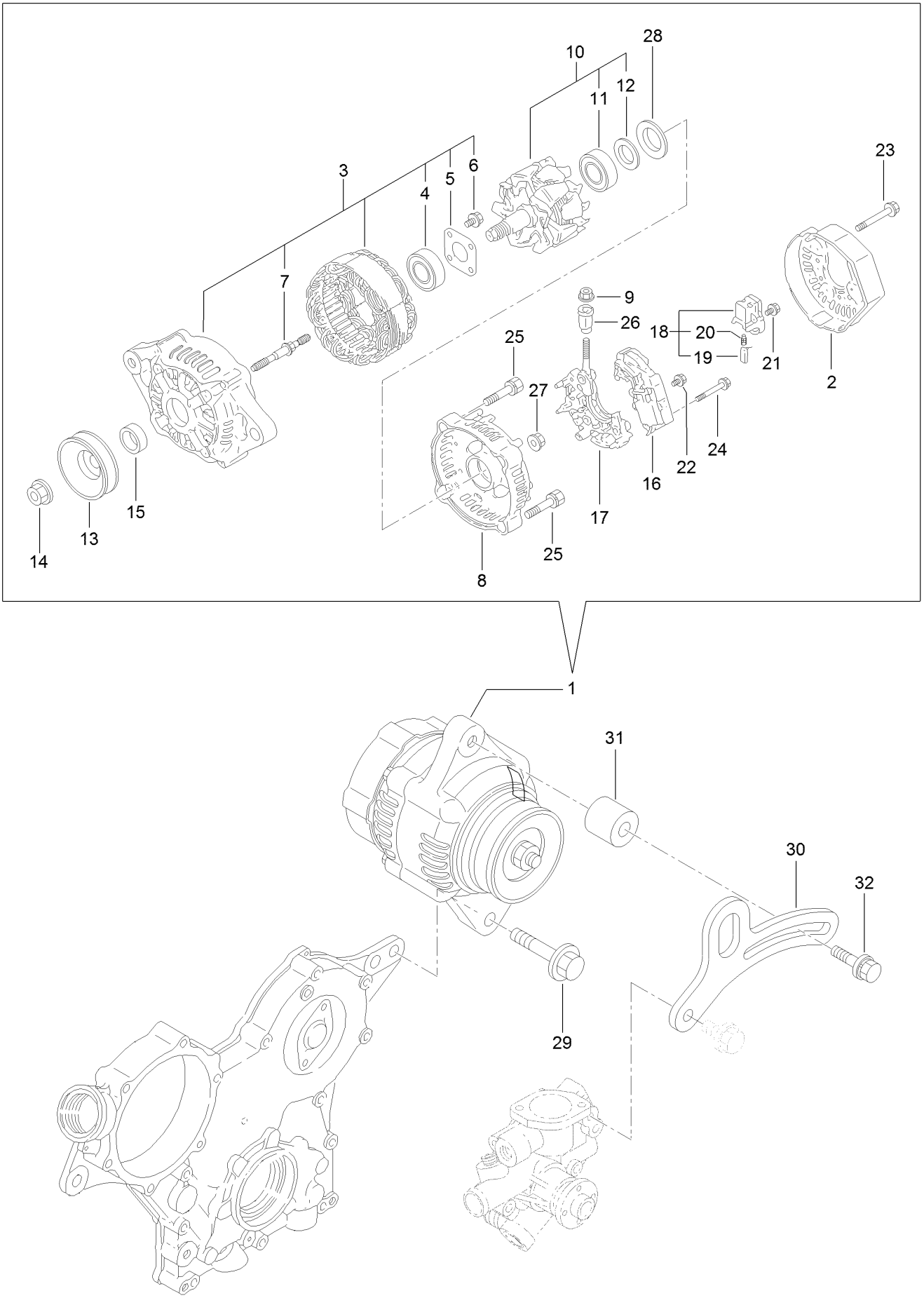

Generator Assembly (continued)

Ref.	Part Number	Qty.	Description
1	140-7162	1	Alternator (12V-40A)
2	127-2999	1	Cover
3	135-4025	1	Frame ASM
4	127-2958	1	Bearing-Ball
5	127-2959	1	Plate-Retainer
6	127-2960	4	Screw
7	127-2961	2	Stud
8	140-7163	1	Rear Frame ASM
9	127-3190	1	Nut
10	127-2951	1	Rotor ASM
11	127-2983	1	Bearing-Ball
12	127-2962	1	Cover
13	127-2954	1	Pulley
14	127-2955	1	Nut
15	127-2957	1	Collar
16	134-4018	1	Regulator ASM
17	127-2963	1	Holder
18	127-2993	1	Holder
19	127-2956	2	Brush ASM
20	127-2964	2	Spring
21	127-2965	6	Screw
22	127-2966	1	Screw
23	127-2967	3	Bolt
24	127-2968	2	Screw
25	127-2969	2	Bolt
26	127-2970	1	Bushing-Insulation
27	127-2971	2	Nut
28	127-2972	1	Washer
29	135-4277	1	Bolt
30	140-7151	1	Adjuster-Belt
31	140-7166	1	Spacer-Adjuster
32	125-7134	1	Bolt

Accessory Assembly

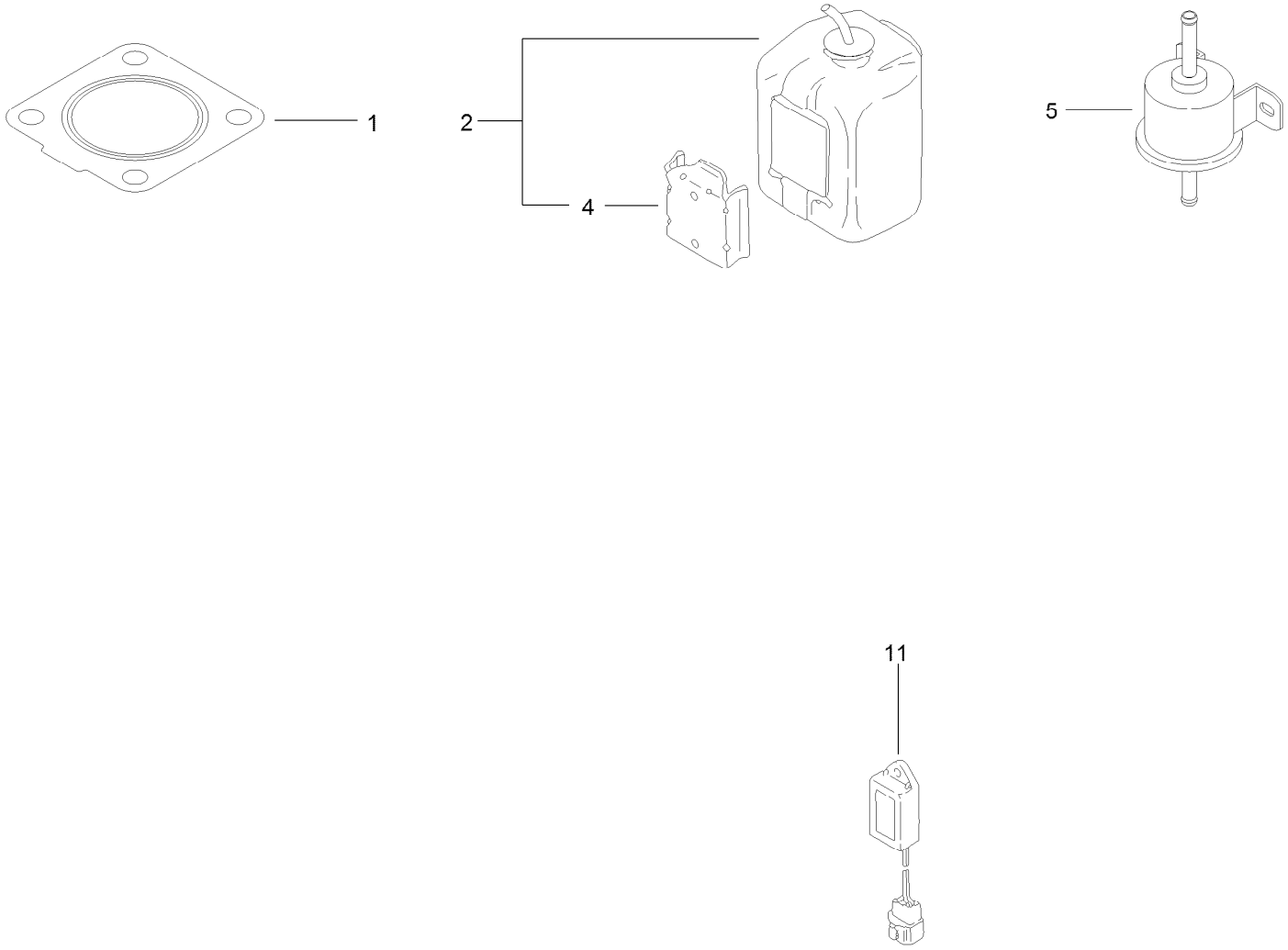

Accessory Assembly (continued)

Ref.	Part Number	Qty.	Description
1	134-1383	1	Gasket-Silencer
2	140-7185	1	Tank ASM
4	140-7165	1	Bracket-Tank
5	121-5613	1	Pump-Fuel, Electric
11	134-1507	1	Timer

Gasket Set

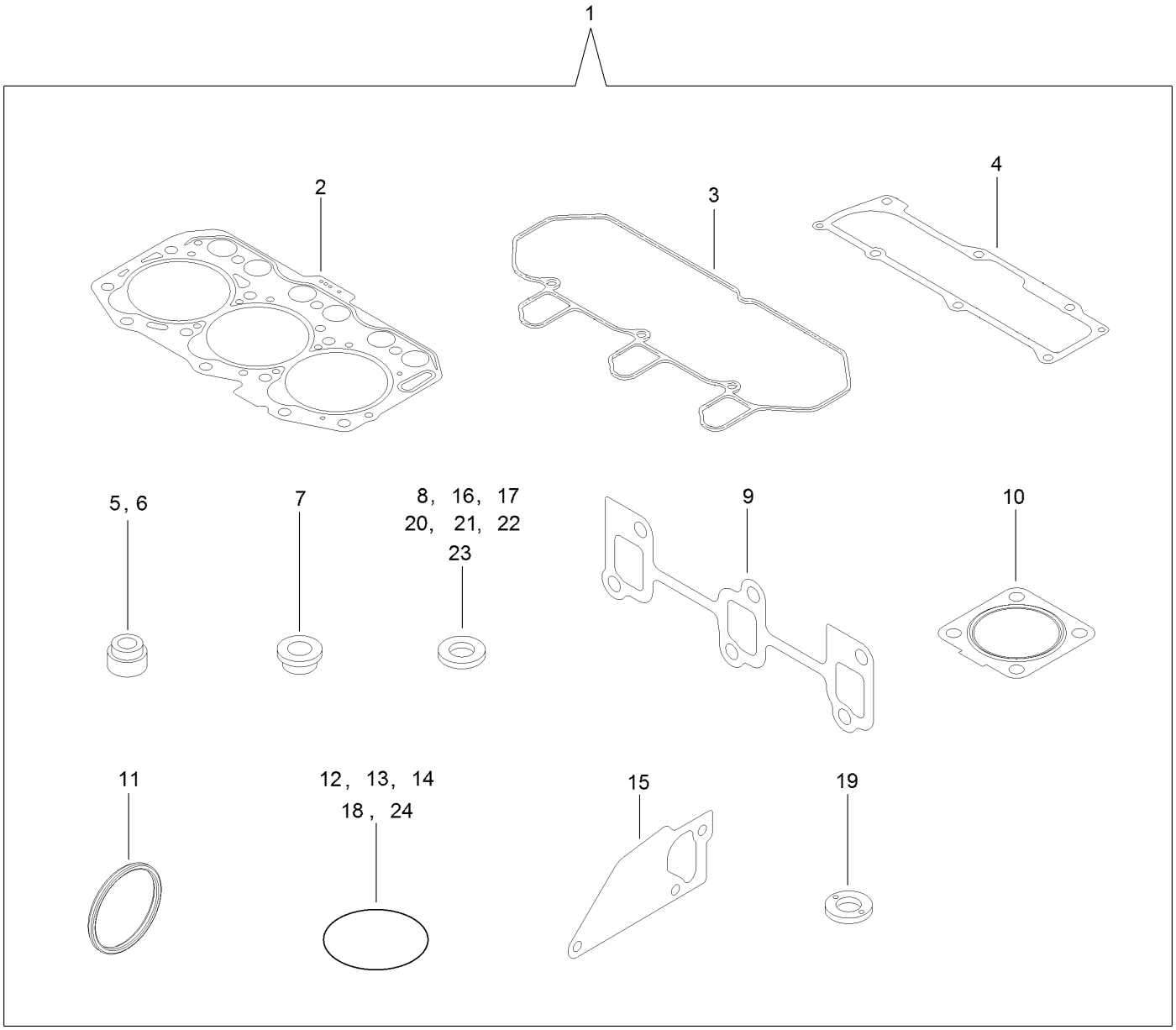

Gasket Set (continued)

Ref.	Part Number	Qty.	Description
1	140-7184	1	Gasket Set
2	135-4038	1	Head Gasket Set
3	135-4093	1	Gasket-Cover, Cylinder Head
4	135-4095	1	Gasket
5	125-6915	3	Seal-Stem, Valve
6	125-6916	3	Seal-Stem, Valve
7	135-4069	3	Protector-Nozzle
8	135-4070	6	Gasket-Nozzle
9	135-4107	1	Gasket-Manifold, Exhaust
10	134-1383	1	Gasket-Silencer
11	134-4004	1	Packing-Washer
12	127-2973	1	O-Ring
13	135-4058	2	O-Ring
14	135-4178	1	O-Ring
15	135-4193	1	Gasket-Pump, Water
16	125-6979	1	Gasket
17	134-4010	1	Gasket
18	125-6957	1	O-Ring
19	135-4237	3	Gasket
20	125-7174	4	Washer-Seal
21	125-7176	4	Washer-Seal
22	136-8236	1	Washer-Seal
23	125-7192	1	Gasket
24	125-7197	2	O-Ring

Attachments and Accessories

For 31901 Groundsmaster 3200 All-Wheel Drive Traction Unit

Product Name	Model/Part
Slope Sensor Kit	31952
CE Kit, Groundsmaster 3200 or 3300 Series Traction Unit	31953
CE Kit, Groundsmaster 3200 or 3300 Series 60in Side Discharge Rotary Mower	31957
CE Kit, Groundsmaster 3200 or 3300 Series 72in Side Discharge Rotary Mower	31958
CE Kit, Groundsmaster 3200 or 3300 Series 60in Rear Discharge Rotary Mower	31959
CE Kit, Groundsmaster 3200 or 3300 Series 72in Rear Discharge Rotary Mower	31960
Auxiliary HYD Kit	31966
60in SD Deck	31970
60in RD Deck	31971
72in SD Deck	31972
72in RD Deck	31973
60in RD Deck, T2	31974
72in RD Deck, T2	31975
Recycler Kit 60in/152cm SD	31976
Recycler Kit, 60In/152cm RD	31977
Recycler Kit, 72In/183cm SD	31978
Recycler Kit, 72In/183cm RD	31979
Seat Assembly - Standard	31980
Seat Assembly - Mechanical Suspension	31981
Seat Assembly - Air Ride Suspension	31982
Storage Box Kit	31983
USB Charging Kit	31984
Recycler Kit 60in/152cm Rd T2	31985
Recycler Kit 72in/183cm Rd T2	31986
Cab-Winter, GM3000 Series	31990
Road Light Kit (North America)	31991
Road Light Kit (EU)	31992
Accessory Control Kit	31994
LED Beacon Kit	31996
Led Work-light Kit (GM3200/3300, Rops)	31997
15-Pound Cast Weight	112-7059-01
42-Pound Weight	114-4096
PX Hydraulic Fluid (55 Gal)	133-8087
PX Hydraulic Fluid (5 Gal)	133-8086
Premium Synthetic Bio-Degradable Hydraulic Fluid (55 Gallon Drum)	119-2158
Premium Synthetic Bio-Degradable Hydraulic Fluid (5 Gallon Pail)	119-2157
Storage Bag Kit	139-2020
White Universal Sunshade	30669
SMV Kit	139-2339
Red Universal Sunshade	30671
Switch Panel-Universal Sunshade	03248
Wrench-Caster Cap/Latch	138-6367
Operator Cooling Fan	03247
Sunshade Work Lights Kit	138-2700
Beacon Kit	138-2699
Filter-Air	108-3811

Attachments and Accessories (continued)

Element-Filter, Fuel 134-3085
Semi-Gloss Black Spray Paint 361-9
Filter-Spin On, Fuel/Water 110-9049
Filter-Oil, Transmission 86-3010
Filter-Oil, Engine 135-4181
Hydraulic Hose Kit 31999
Power Harness Kit 140-1559
Kit-Weight 144-0480
Plate-Weight, 25 LBS 144-0484
Toro Red 12oz Aerosol Can 361-10
Paint-Black Bottle 112-0176
Paint-Red Pen 112-0177
Paint-Red Bottle 112-0178
Seat Cover (W/arm rest) 117-0095
Kit-Blade, Std (24.5) 3pk 144-3911
Kit-Blade, Med Flow (20.5) 3pk 144-3912
Kit-Blade, High Flow (20.5) 3pk 144-3913
Kit-Blade, Atomic (20.5) 3pk 144-3914
Kit-Blade, Low Flow (24.5) 3pk 144-3915
Kit-Blade, Recycling (24.5) 3pk 144-3916
Kit-Blade, Low Flow (20.5) 3pk 144-3917
Kit-Blade, Recycling (20.5) 3pk 144-3918
Kit-Blade-24.50 Low Flow 3pk 144-3962
Kit-Blade-24.50 Recycler 3pk 144-3963
Kit-Blade-20.50 Low Flow 3pk 144-3964
Kit-Blade-20.50 Recycler 3pk 144-3965
Kit-Blade-24.50 Atomic 3pk 144-3966
Kit-Blade-20.50 Atomic 3pk 144-3967
Hose Replacement Kit, Groundsmaster 3200 or 3300 Series Traction Unit 144-3960
Vibration Reduction Kit, Groundsmaster 3200 Series Traction Unit 144-3961
Shim Tensioner Kit, Groundsmaster 3200 or 3300 Series Traction Unit 144-4045
Tube Replacement Kit, Groundsmaster 3200 or 3300 Series Traction Unit 144-4047
Boss Plow, 5ft Straight Blade MSC23345
Blade Crate (Snowplow), ATV Poly S STB13567B

TORO®

Count on it.