Form No. 3326-729

Tru Trak™ Sulky

ProLine Mid Size Mower Attachment

Model No. 30110—210000001 and Up

Parts Catalog

Ordering Replacement Parts

To order replacement parts, please supply: the part number, the quantity, and the description of each part desired.

Understanding Reference Numbers

Each identified part in an illustration has a reference number. The reference number for a part also appears in the parts list, along with other information about the part.

This catalog uses two special reference number formats, one to indicate parts in a service assembly and another to indicate the quantity of a given part in an illustration.

Service Assembly Reference Numbers

Parts in service assemblies have reference numbers in the form **a:b.** The **a** represents the reference number of the entire service assembly and the **b** represents a sequential number unique to each part within the service assembly.

For example, a wheel assembly might be identified by reference number **6**, the tire by **6:1**, the valve by **6:2**, and the wheel by **6:3**. When you order the assembly identified by reference number 6, you receive all parts identified by reference numbers 6:1, 6:2, and 6:3. However, you may also order any part individually.

Reference numbers of this type appear in illustrations and in part lists.

Reference Numbers Indicating Quantity

In an illustration, if a reference number indicates more than one part, the reference number has the form **nX y.** The **n** represents the quantity of the part, the **X** is the multiplication symbol, and the **y** represents the reference number.

For example, in an illustration, the reference number **2X 37** means that two of the parts identified by reference number 37 are indicated.

© The TORO Company — 2001
All Rights Reserved

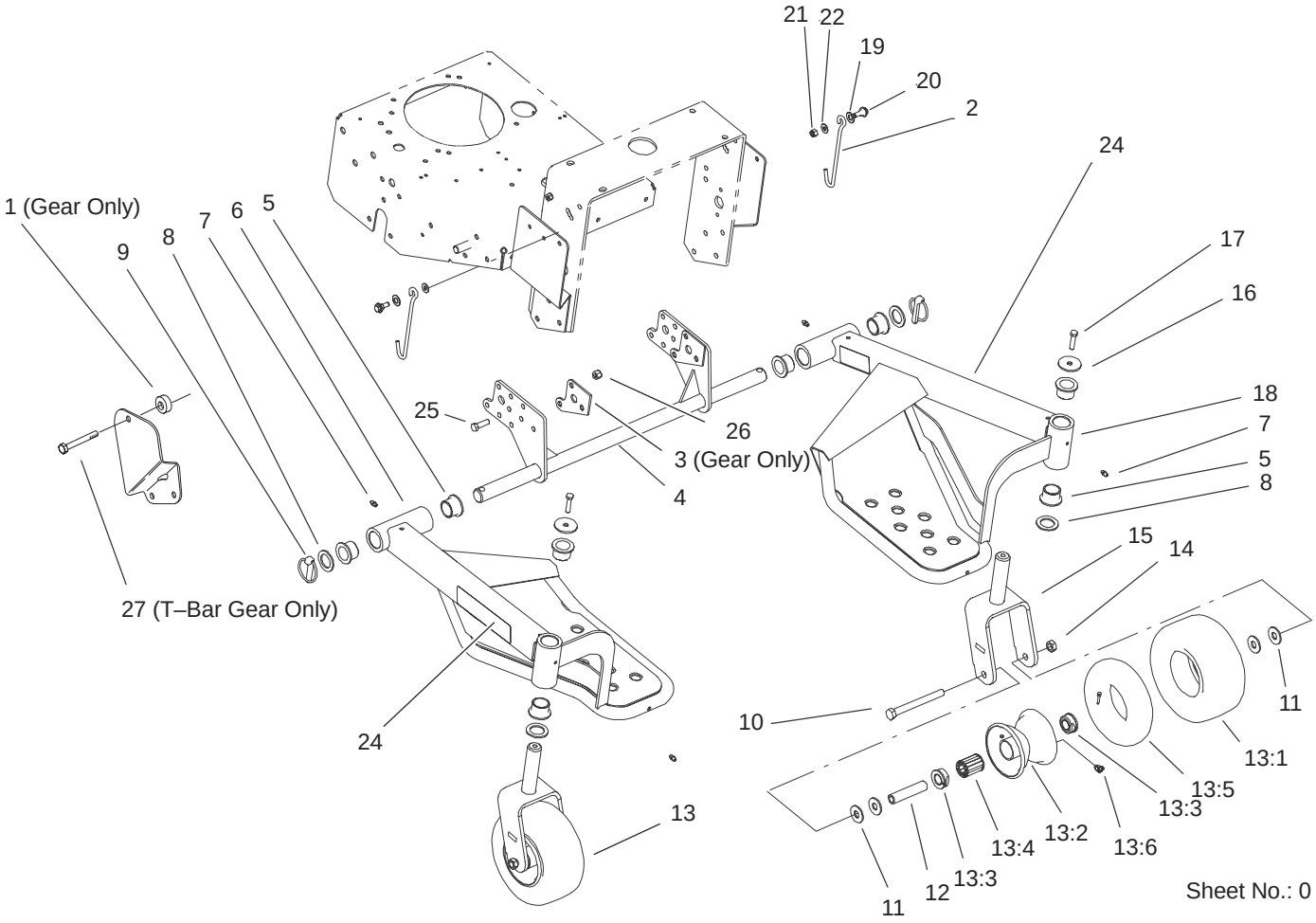

Sulky Assembly

Ref. No.	Part No.	Qty.	Description
1	104–8426	2	Spacer
2	104–8416	2	Hook
3	104–8425–01	2	Plate–Spacer
4	104–8405–01	1	Axle ASM
5	94–1291	8	Bushing–Special
6	104–8407–01	1	LH Floor Plate ASM
7	302–5	4	Fitting–Grease
8	3–6781	4	Washer–Thrust
9	283–71	2	Pin–Lynch
10	325–19	2	Screw–HH
11	3256–6	8	Washer–Flat
12	68–8980	2	Spanner–Tire
13	99–1268	2	Castor Wheel ASM
13:1	93–9939	1	Tire
13:2	100–2348	1	Rim ASM
13:3	62–5580	2	Bearing–Outside
13:4	62–5570	1	Bearing–Roller
13:5	100–5832	1	Tube W/ Valve
13:6	302–11	1	Fitting–Lube 45°
14	32153–5	2	Nut–Lock
15	104–8402–01	2	Castor ASM
16	63–7400	2	Washer–Rebound
17	322–7	2	Screw–HH
18	104–2743–01	1	RH Floor Plate ASM
19	3290–478	2	Washer–Belleville
20	94–7817	2	Bolt–Shoulder

Ref. No.	Part No.	Qty.	Description
21	3296–29	2	Nut–Lock NI
22	80–4980	2	Washer – Thrust
24	104–8477	2	Decal
25	323–29	6	Screw–HH
26	3296–39	6	Nut–Lock, NI
27	323–23	2	Screw–HH