Form No. 3324-220 Rev A

TORO®

Tiller

Dingo® Attachment

Model No. 22445—200000001 & Up

Operator's Manual

CE

English (CE)

Contents

	Page
Introduction	2
Safety	2
Safety Decals	3
Specifications	3
Stability Ratings	4
Operation	4
Tips for Tilling	4
Maintenance	5
Service Interval Chart	5
Greasing and Lubrication	5
Adjusting Tiller Drive Chain Tension	5
Tiller Tine Replacement	6
Storage	6
Troubleshooting	7

Introduction

We want you to be completely satisfied with your new product, so feel free to contact your local Authorized Service Dealer for help with service, genuine replacement parts, or other information you may require.

Whenever you contact your Authorized Service Dealer or the factory, always know the model and serial numbers of your product. These numbers will help the Service Dealer or Service Representative provide exact information about your specific product. You will find the model and serial number on a plate located on the product.

For your convenience, write the product model and serial numbers in the space below.

Model No: _____

Serial No. _____

The warning system in this manual identifies potential hazards and has special safety messages that help you and others avoid personal injury, even death. DANGER, WARNING and CAUTION are signal words used to identify the level of hazard. However, regardless of the hazard, be extremely careful.

DANGER signals an extreme hazard that will cause serious injury or death if the recommended precautions are not followed.

WARNING signals a hazard that may cause serious injury or death if the recommended precautions are not followed.

CAUTION signals a hazard that may cause minor or moderate injury if the recommended precautions are not followed.

Two other words are also used to highlight information. “Important” calls attention to special mechanical information and “Note” emphasizes general information worthy of special attention.

The left and right side of the machine is determined by standing in the normal operator’s position.

Safety

Improper use or maintenance by the operator or owner can result in injury. To reduce the potential for injury, comply with these safety instructions and those in the traction unit operator’s manual. Always pay attention to the safety alert ⚠ symbol, which means CAUTION, WARNING, or DANGER—“personal safety instruction.” Failure to comply with the instruction may result in personal injury or death.

⚠ DANGER ⚠

POTENTIAL HAZARD
- **Contact with rotating tines may cause injury.**

WHAT CAN HAPPEN
- **Rotating tines can cut hands, feet or other body parts.**

HOW TO AVOID THE HAZARD
- **Keep away from the rotating tines while operating the tiller.**
- **Keep your hands, feet, and any other part of your body or clothing away from rotating parts.**
- **Before adjusting, cleaning, repairing and inspecting the tiller, lower the tiller and loader arms to the ground and stop the engine. Remove the key.**

©The Toro Company – 1999

8111 Lyndale Ave. South
Bloomington, MN 55420–1196

All Rights Reserved
Printed in the USA

WARNING

POTENTIAL HAZARD
- **There may be buried power, gas, and/or telephone lines in the area needing tilling.**

WHAT CAN HAPPEN
- **Shock or explosion may occur.**

HOW TO AVOID THE HAZARD
- **Have the property or area to be tilled marked for buried lines.**

WARNING

POTENTIAL HAZARD
- **Tines can throw dirt, debris, and small rocks.**

WHAT CAN HAPPEN
- **The operator or bystander could be injured by flying debris.**

HOW TO AVOID THE HAZARD
- **Run the tiller so that debris is thrown away from the traction unit.**
- **Keep all bystanders away from the work area.**

WARNING

POTENTIAL HAZARD
- **When the engine is off, attachments in the raised position can gradually lower.**

WHAT CAN HAPPEN
- **Someone nearby may be pinned or injured by the attachment as it lowers.**

HOW TO AVOID THE HAZARD
- **Always lower the loader arms before you shut off the traction unit.**

Safety Decals

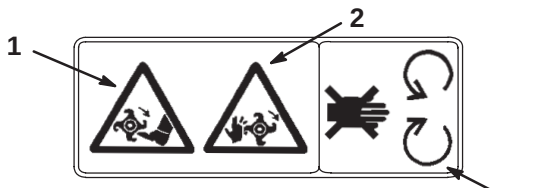

 # 93–7321



 # 100–4708

Figure 1

1. Cutting hazard–foot
2. Cutting hazard–hand
3. Keep away from moving parts
4. Trown object hazard
5. Keep bystanders away

Specifications

Overall width	44.0 in. (112 cm)
Overall length	20.0 in. (51 cm)
Overall height	26.0 in. (66 cm)
Tilling width	40.0 in. (102 cm)
Tine diameter	19.0 in. (48 cm)
Tine speed (max)	245 rpm @ 3600 engine rpm (flow divider @ 9 o'clock position)
Tine speed (recommended)	225 rpm @ 3600 engine rpm (flow divider @ 10 o'clock position)
Tine thickness	.25 in. (0.63 cm)

Tine width	2.5 in. (6.4 cm)
Number of tines	36
Shaft diameter	1.50 in. (3.8 cm)
Drive	Chain ANSI 60 reduction ratio 1.8:1
Hydraulic motor displacement	6.20 cu. in. (102 cc)
Weight	363 lb. (165 kg)

Stability Ratings

To determine the degree of slope you can traverse with the tiller installed on a traction unit, find the stability rating for the hill position you want to travel in the table below, then find the degree of slope for the same rating and hill position in the Stability Data section of the traction unit operator's manual.

Orientation	Stability Rating
Front Uphill 	C
Rear Uphill 	C
Side Uphill 	B

Note: The tiller is rated for use without the counterweight. If you use the counterweight with the tiller, the traction unit will be less stable in the front and side uphill positions.

WARNING

POTENTIAL HAZARD
- **Exceeding the maximum slope can cause the traction unit to tip.**

WHAT CAN HAPPEN
- **If the traction unit tips, you or bystanders could be crushed.**

HOW TO AVOID THE HAZARD
- **Do not drive the the traction unit on a slope steeper that the maximum slope.**

Operation

IMPORTANT: Lift and move the attachment using the traction unit.

Refer to your traction unit *Operator's Manual* for more information on installing and removing the tiller from your traction unit.

Tips for Tilling

- Clean the area of trash, branches, and rocks before tilling to prevent equipment damage.
- Always begin tilling with the slowest ground speed possible. Increase speed if conditions permit.
- Always use full throttle (maximum engine speed).
- Till in long, straight passes. Do not make turns while the tiller is in the ground, as equipment damage may result.
- Avoid excessive tilling of the soil, as finely tilled soil will not absorb moisture easily and puddles of water or run-off may occur.
- When tilling hard packed, very dry, or virgin soil, raise the tiller so only the very top of the soil is penetrated. On succeeding passes the depth may be lowered.
- Run the tiller so that the dirt is thrown away from you.
- If a rock or other obstruction gets into the tiller tines, reverse the rotation direction to dislodge it.

Maintenance

Service Interval Chart

Service Operation	Each Use	5 Hours	25 Hours	Storage Service	Notes
Shaft bearing–lubricate			X	X	
Chain tension–adjust and lubricate		initial	X		
Tines–check	X				Replace as required
Tine bolts–check and tighten	X				Replace as required
Chipped surfaces–paint				X	

CAUTION

POTENTIAL HAZARD
- **If you leave the key in the ignition switch, someone could start the engine.**

WHAT CAN HAPPEN
- **Accidental starting of the engine could seriously injure you or other bystanders.**

HOW TO AVOID THE HAZARD
- **Remove the key from the ignition switch before you do any maintenance.**

Greasing and Lubrication

Service Interval/Specification

Grease the 2 tiller shaft fittings every 25 operating hours. Grease immediately after every washing.

Grease Type: General-purpose grease.

How to Grease

1. Lower the loader arms and stop the engine. Remove the key.
2. Clean the grease fittings with a rag.
3. Scrape any paint off the front of the fittings.
4. Connect a grease gun to each fitting.
5. Pump grease into the fittings until grease begins to ooze out of the bearings.
6. Wipe up any excess grease.

Lubricating Tiller Drive Chain

Lubricate tiller drive chain after the initial 5 hours of operation and every 25 operating hours thereafter.

Lubricant Type: Commercial chain lube.

1. Lower the loader arms and stop the engine. Remove the key.
2. Remove the chain drive cover (Fig, 2).
3. Apply a commercial chain lube onto the chain spans.
4. Install the chain drive cover.

Adjusting Tiller Drive Chain Tension

Adjust the tiller drive chain after the initial 5 hours of operation and every 25 operating hours thereafter. There should be 1/2 to 3/4 in. (1 to 2 cm) slack in the chain, measured mid-way between the sprockets.

1. Lower the loader arms and stop the engine. Remove the key.
2. Remove the chain drive cover (Fig, 2).
3. Loosen the 2 hydraulic motor, mount plate bolts (Fig, 2).
4. Using the adjuster bolt, move the hydraulic motor upward to tighten the chain (Fig, 2).

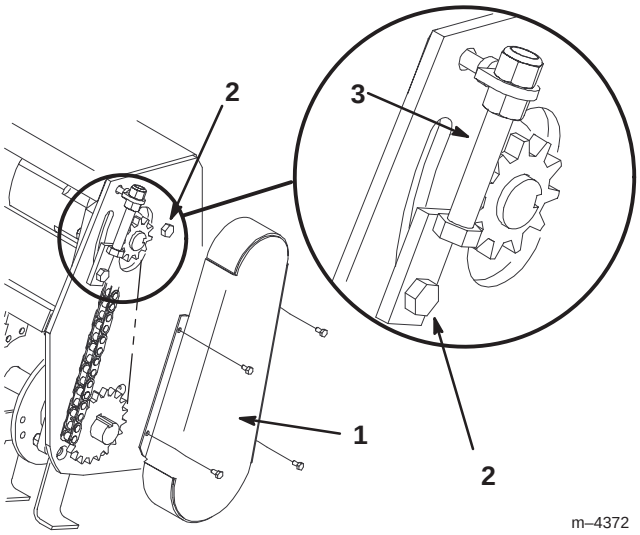

Figure 2

1. Chain drive cover
2. Hydraulic motor, mount plate bolt
3. Adjuster bolt

5. After proper chain tension is attained, tighten the adjuster bolt and hydraulic motor mount plate bolts (Fig, 2).

Note: When proper adjustment can no longer be attained from the adjuster bolt or repeated chain failures occur, replace chain.

6. Install the chain drive cover.

Tiller Tine Replacement

Check and replace tines when they become worn or dull. Worn or dull tines will degrade the performance of the tiller.

Tines should be installed as illustrated in Figure 3 with 2 left hand tines and 2 right hand tines on each hub.

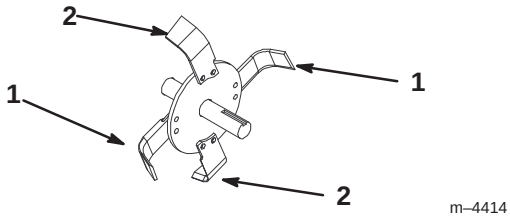

Figure 3

1. Left hand tine
2. Right hand tine

The cutting edges of the tines should face toward the rear of the tiller.

Torque the tine mounting bolts to 63 to 77 ft.-lb. (85 to 104 N·m).

Storage

1. Before long term storage wash the tiller with mild detergent and water to remove dirt and grime.

2. Check the condition of the drive chain. Adjust and lubricate the chain.

3. Grease all fittings.

4. Check and tighten all bolts, nuts, and screws. Repair or replace any part or tines that are damaged or worn.

5. Paint all scratched or bare metal surfaces. Paint is available from your Authorized Service Dealer.

6. Store the tiller in a clean, dry garage or storage area. Cover the tiller to protect it and keep it clean.

Troubleshooting

PROBLEM	POSSIBLE CAUSES	CORRECTIVE ACTION
Tiller does not operate.	1. Hydraulic coupler not completely connected	1. Check and tighten all couplers.
	2. Defective hydraulic coupler	2. Check couplers and replace any that are defective.
	3. An obstruction in a hydraulic hose	3. Find and remove the obstruction.
	4. Auxiliary valve on the traction unit is not opening.	4. Repair the valve.
	5. An obstruction in the tiller (e.g., rock or root)	5. Find and remove the obstruction.
	6. Broken drive chain	6. Repair or replace the chain.
	7. Loose drive chain	7. Adjust the chain tension.
	8. Defective hydraulic valve	8. Replace or repair the defective valve.
	9. Defective drive motor	9. Replace or repair the drive motor.


TORO®