Form No. 3452-295 Rev A

Traction and Wheel Motor Replacement Kit

Greensmaster® eTriFlex® 3360 or 3370 Traction Unit

Model No. 147-3051

Model No. 147-3052

Model No. 147-3053

Model No. 147-3054

Installation Instructions

Installation

1

Preparing the Machine

No Parts Required

Procedure

1. Park the machine on a level surface.
2. Engage the parking brake.
3. Lower the cutting units.
4. Shut off the machine and remove the key.
5. Disconnect the main-power connectors; refer to your machine *Operator's Manual*.

2

Raising the Machine

No Parts Required

Procedure

Raise the machine; refer to the pre-maintenance section of your machine *Operator's Manual*.

3

Removing the Front Wheel

No Parts Required

Procedure

Note: If you are replacing a left-hand side motor (Model No. 147-3052 or 147-3054), remove the left, front wheel. If you are replacing a right-hand side motor (Model No. 147-3051 or 147-3053), remove the right, front wheel.

1. Loosen and remove the wheel lug nuts (Figure 1).

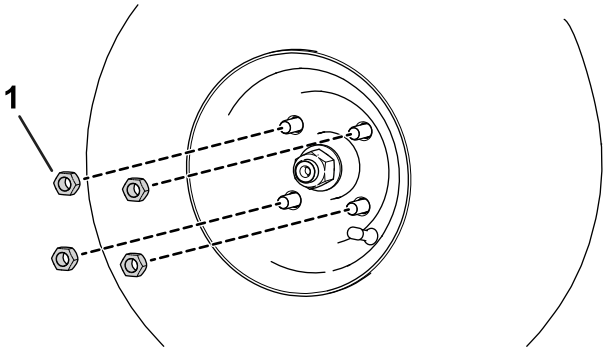

Figure 1

1. Lug nut

2. Remove the tire.

© 2022—The Toro® Company
8111 Lyndale Avenue South
Bloomington, MN 55420

Register at www.Toro.com.

Original Instructions (EN)
Printed in the USA
All Rights Reserved

3452-295

4

Removing the Front Wheel Hub

No Parts Required

Procedure

1. Loosen the front hub locknut at least 2 revolutions.
2. Use a 3-jaw puller to loosen the front hub assembly from the gearbox shaft.

   Important: **Do not hit the front wheel hub or gearbox assembly with a hammer when removing the front hub. Hammering the assembly may damage the gearbox.**
3. Remove wheel hub by removing the corresponding wheel hub locknut and washer (Figure 2).
4. Remove the woodruff key (Figure 2).

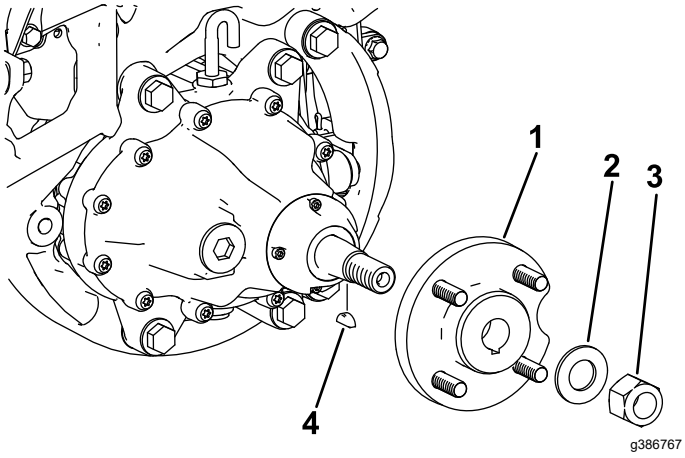

Figure 2

1. Hub
2. Washer
3. Locknut
4. Woodruff key

5

Draining the Traction-Motor-Gearbox Fluid

No Parts Required

Procedure

1. Place a drain pan under the wheel-motor assembly (Figure 3).

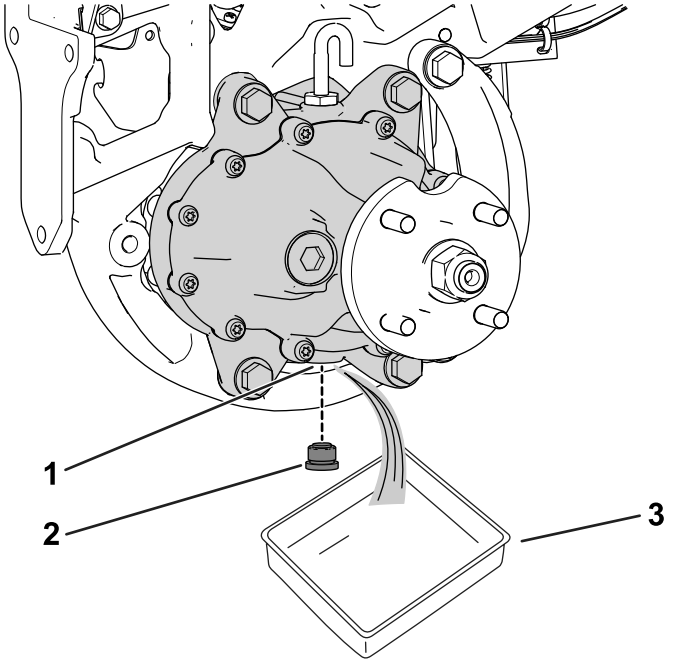

Figure 3

1. Drain port
2. Drain plug
3. Pan

2. Remove the plug from the drain port (Figure 3).

   Note: The drain port is located on the bottom of the gearbox.

   Note: Allow the oil to drain completely from the gearbox.
3. Clean the plug.
4. Install the drain plug into the drain port (Figure 3).

6

Removing the Existing Motor

No Parts Required

Procedure

1. If you are replacing a traction motor (Part No. 147-3051 or 147-3052), remove the existing motor as follows:
   A. Remove and retain the gearbox and corresponding hardware from the existing motor assembly; refer to your machine *Service Manual*.
   B. Remove and discard the existing motor assembly; refer to your machine *Service Manual*.
2. If you are replacing a wheel motor (Part No. 147-3053 or 147-3054), remove and discard the existing motor assembly; refer to your machine *Service Manual*.

7

Installing the Wire Harness Adapter

Parts needed for this procedure:

1	Motor assembly
1	Wire harness motor adapter
6	Open-end splice
1	Closed-end splice

Procedure

1. Cut off the existing motor adapter from the motor wire harness.



g386267

Figure 4

1. Existing motor adapter
2. Cut here

2. Stagger the ends of the harness wires slightly to avoid splices from being in one location or section of the harness; refer to Figure 5.
3. Cut the wires on the new adapter to the appropriate length (Figure 5).
4. Strip off approximately 9.5 mm (3/8 inch) of insulation from the 6 adapter wires and 7 harness wires (Figure 5).

   Important: **Be careful and ensure that you do not damage the wire strands when stripping the insulation.**

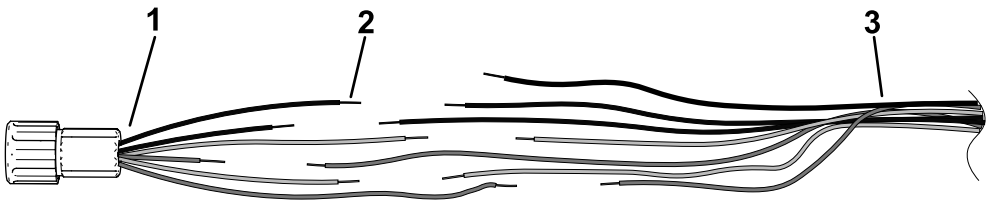

g386280

Figure 5

1. Motor adapter (included in kit)
2. Exposed wire 9.5 mm (3/8 inch)
3. Existing wire harness

5. Ensure that the wire insulation is clean and the copper wire is not corroded for the splice adhesive to bond properly.
6. On the existing wire harness, install the closed-end spice onto 1 of the gray wires using a crimping tool that matches position (22-14 AWG); refer to A of Figure 6.

   Note: When crimping the splice, do not damage the insulation.
7. Use an appropriate heat gun to shrink the splice insulation until the adhesive has squeezed out (B of Figure 6).

   Note: Do not overheat or burn the insulation.

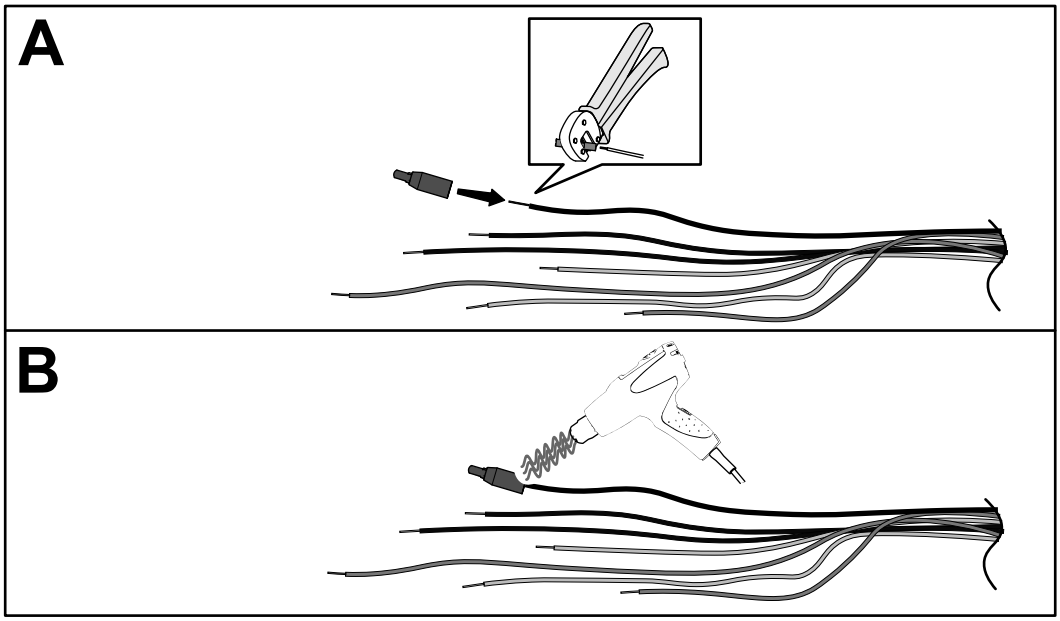

g390752

Figure 6

8. On the existing wire harness, install an open-end splice onto the 6 remaining wires end one at a time using a crimping tool that matches position (20-18 AWG); refer to A of Figure 7.

   Note: When crimping the splice, do not damage the insulation.
9. Insert each of the motor adapter wires into the corresponding open-end splice, matching the insulation color of the wires, and crimp the connector securely (B of Figure 7).
10. Use an appropriate heat gun to shrink the splice insulation until the adhesive has squeezed out from each end (C of Figure 7).

    Note: Do not overheat or burn the insulation.

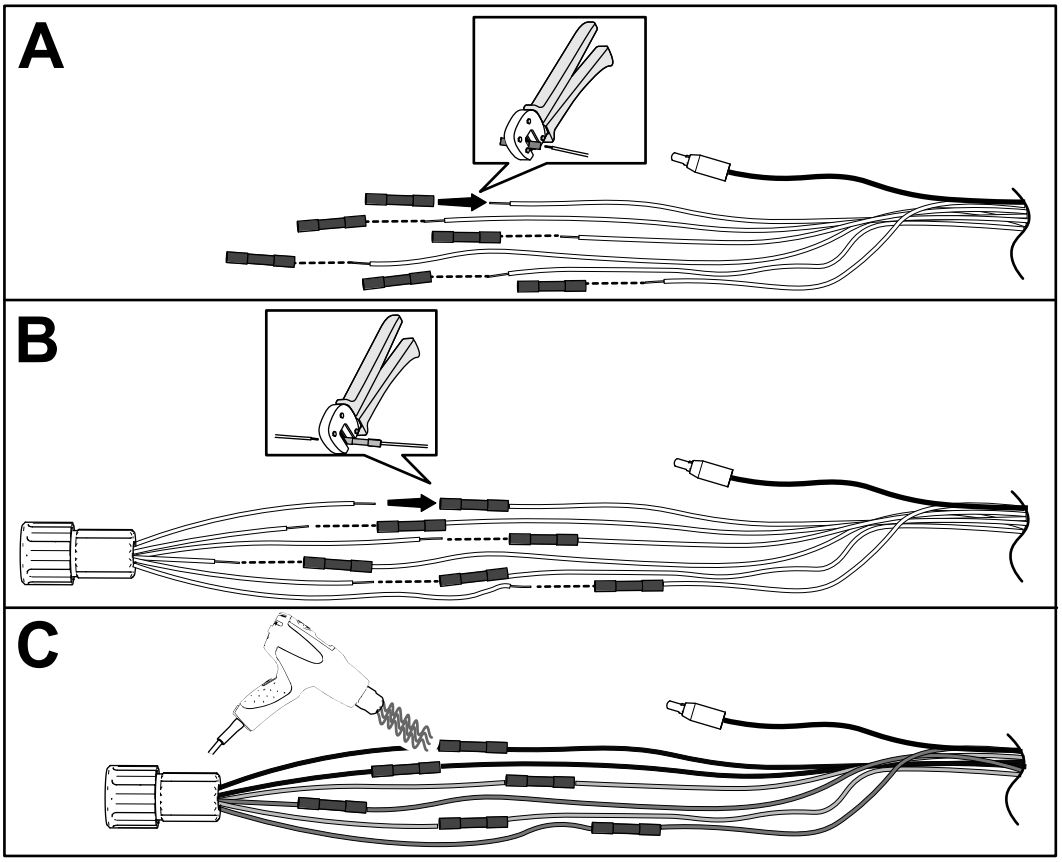

g386293

Figure 7

8

Installing the Motor

No Parts Required

Procedure

1. If you are replacing a traction motor (Part No. 147-3051 or 147-3052), install the gearbox (removed in Step 1 of 6 Removing the Existing Motor (page 2)) onto the new motor. Refer to your machine *Service Manual*.
2. Install the motor assembly on the machine; refer to your machine *Service Manual*.

9

Installing the Front Wheel Hub

No Parts Required

Procedure

1. Install the previously removed wheel hub with the corresponding locknut and washer (Figure 8).
2. Tighten the front hub nut from 237 to 305 N·m (175 to 225 ft-lb).
3. Install the woodruff key (Figure 8).

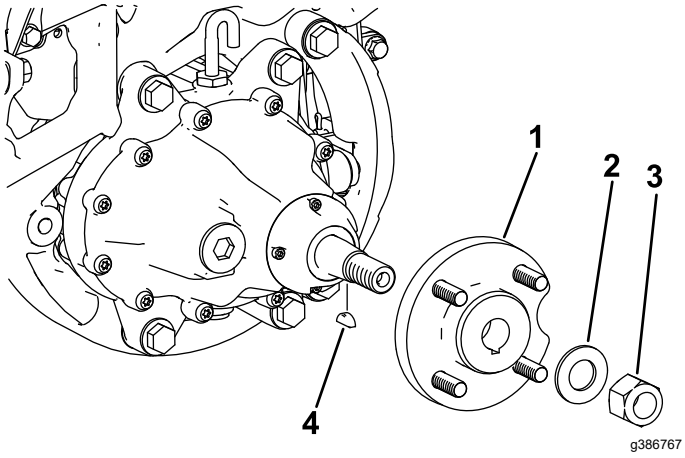

Figure 8

1. Hub
2. Washer
3. Locknut
4. Woodruff key

10

Filling the Traction-Motor-Gearbox Fluid

No Parts Required

Procedure

Important: **The machine must be level so that the correct amount of fluid can be added to the gearbox.**

Ensure that the machine is level on the jack stands.

1. Remove the vent hose and fitting from the top of the gearbox (Figure 9).

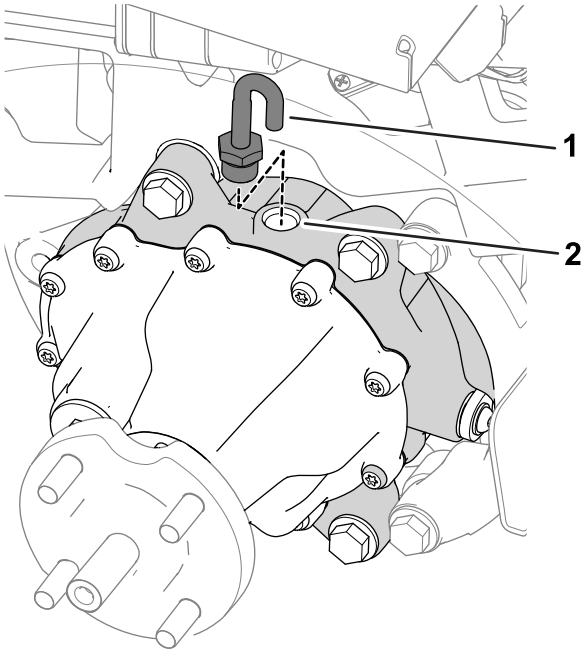

Figure 9

1. Vent hose and fitting
2. Fill port

2. Fill the gearbox with 384 ml (13 fl oz) of SAE 80W90 fluid through the fill port.
3. Install the vent hose and fitting into the fill port (Figure 9).

11

Installing the Front Wheel

No Parts Required

Procedure

1. Slide the tire onto the wheel hub.
2. Install the wheel lug nuts (Figure 10).

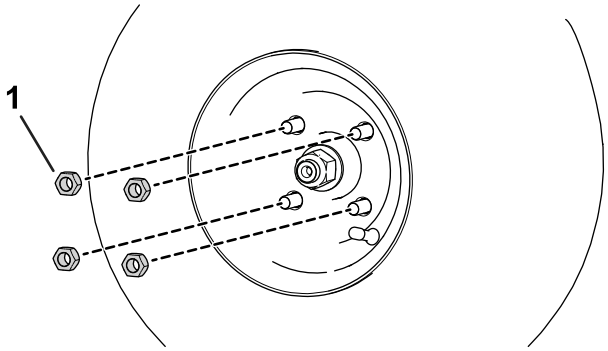

g280226

Figure 10

1. Lug nut

3. Torque the lug nuts (in a crossing pattern as shown in Figure 11) to 108 to 122 N·m (80 to 90 ft-lb).

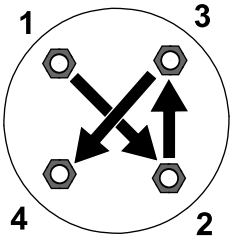

g274650

Figure 11

12

Completing the Installation

No Parts Required

Procedure

1. Lower the machine to the ground.
2. Connect the main-power connectors; refer to your machine *Operator's Manual*.
3. Test the front traction motors; refer to your machine *Service Manual*.
4. Calibrate the front traction motors; refer to your machine *Service Manual*.



Count on it.