Form No. 3433-638 Rev D

TORO®

Count on it.

Parts Catalog

TimeCutter® 6000

Riding Mower

Model No. 75760—Serial No. 400000000 and Up

Register at www.Toro.com.
Original Instructions (EN)

3433-638 D

Ordering Replacement Parts

To order replacement parts, please supply the part number, the quantity, and the description of each part desired.

Understanding Reference Numbers

Each identified part in an illustration has a reference number. The reference number for a part also appears in the parts list, along with other information about the part.

This catalog uses two special reference number formats, one to indicate parts in a service assembly and another to indicate the quantity of a given part in an illustration.

Service Assembly Reference Numbers

Parts in service assemblies have reference numbers in the form a:b. The a represents the reference number of the entire service assembly and the b represents a sequential number unique to each part within the service assembly.

For example, a wheel assembly might be identified by reference number 6, the tire by 6:1, the valve by 6:2, and the wheel by 6:3. When you order the assembly identified by reference number 6, you receive all parts identified by reference numbers 6:1,6:2, and 6:3. However, you may also order any part individually. Reference numbers of this type appear in illustration and in parts lists.

Reference Numbers Indicating Quantity

In an illustration, if a reference number indicates more than one part, the reference number has the form nX y. The n represents the quantity of the part, the X is the multiplication symbol, and the y represents the reference number.

For example, in an illustration, the reference number 2X 37 means that two of the parts identified by reference number 37 are indicated.

Contents

Frame Assembly 4
Deck Lift Assembly 6
Tire and Caster Assembly 8
Traction Drive Assembly 10
LH Transaxle Assembly No. 139-7490 12
RH Transaxle Assembly No. 139-7491 14
Parking Brake Assembly 16
Rear Tire Assembly 18
Seat Pan Assembly 20
Seat Assembly No. 140-5043 22
Motion Control Assembly 24
Engine and Muffler Assembly 26
Fuel System Assembly with Non-Canister Style Air Filter 28
Carburetor Assembly 30
Air Intake and Filtration Assembly 32
Ignition and Cooling Fan 34
Crankcase and Crankshaft Assembly 36
Governor Control Assembly 38
Piston and Cylinder Head Assembly 40
Blower Housing Assembly 42
Gasket and Seal Kit 44
Body Styling and Fuel Pod Assembly 46
Electrical Assembly 48
60 Inch Deck and Decal Assembly 50
Frame Decal Assembly 52
Clutch Assembly 54
Attachments and Accessories 56

© 2022—The Toro® Company
8111 Lyndale Avenue South
Bloomington, MN 55420

Contact us at www.Toro.com.
Printed in the USA.
All Rights Reserved

Frame Assembly

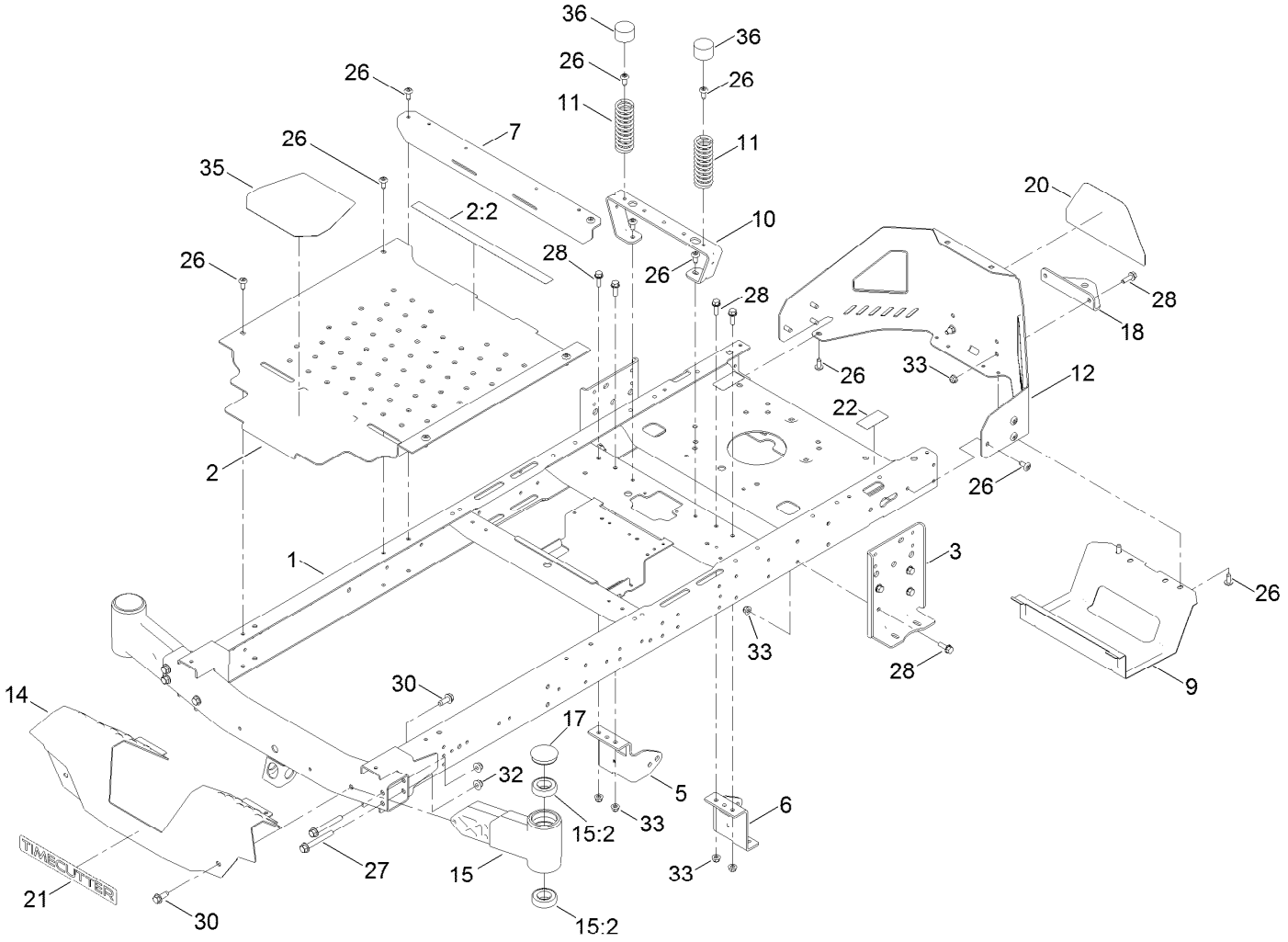

Frame Assembly (continued)

Ref.	Part Number	Qty.	Description
1	137-9820-01	1	Frame Assembly
2	140-5045	1	Pan-Floor ASM
2:2	135-3295	1	Decal-Warning
3	138-7520-01	2	Plate-Mount, Hydro
5	137-7020-01	1	Mount-Hydro, Front (Right)
6	139-3211-01	1	Mount-Hydro, Front (Left)
7	138-9791-01	1	Brace-Cross
9	138-0867-03	1	Guard-Muffler
10	138-6036-03	1	Support-Seat
11	138-2548	2	Spring-Compression
12	138-9820-03	1	Guard-Engine
14	138-9827-01	1	Footrest
15	140-2097	2	Axle Stub ASM
15:2	109-3678	2	Bearing-Ball

Ref.	Part Number	Qty.	Description
17	138-7200	2	Cap-Grease
18	117-1232-03	1	Bracket-Hitch
20	139-5890	1	Decal-Timecutter
21	139-2387	1	Decal-Timecutter
22	121-2989	2	Decal-Bypass
26	138-9753	20	Screw
27	139-2429	4	Screw-HHF
28	3234-29	14	Screw-HHF
30	139-2428	4	Screw-HWH
32	139-2430	4	Nut-HF, NI
33	104-8300	14	Nut-HF, NI
35	139-3220	1	Tread-Step
36	701178	2	Cap-Protector

Deck Lift Assembly

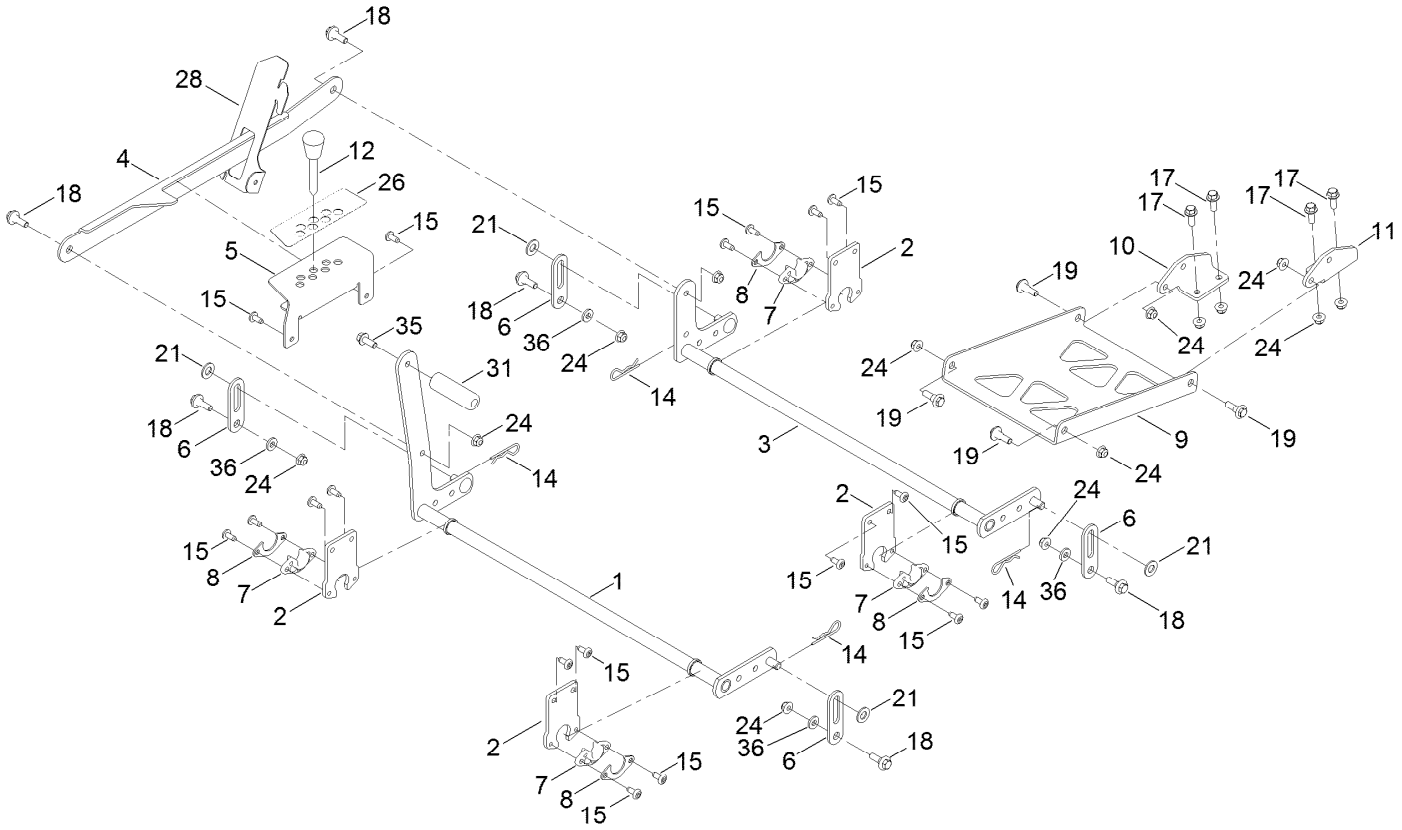

Deck Lift Assembly (continued)

Ref.	Part Number	Qty.	Description
1	138-2503-03	1	Pivot Front ASM
2	138-9804-03	4	Support-Cross, Shaft
3	138-2504-03	1	Rear Pivot ASM
4	137-5091-03	1	Link-HOC
5	137-5092-03	1	Bracket-HOC
6	137-7001-03	4	Link-Decklift
7	139-5872	4	Bearing-Flange
8	138-7204	4	Gusset-Deck Lift
9	139-2435-03	1	Pan-Deck Pivot
10	139-3200-01	1	Mount-Pan, LH
11	139-3201-01	1	Mount-Pan, RH
12	140-2146	1	HOC Pin ASM

Ref.	Part Number	Qty.	Description
14	1-806005	4	Pin-Cotter
15	138-9753	18	Screw
17	3234-42	4	Screw-HHF
18	137-9847	6	Screw-Shoulder
19	109-9840	4	Screw-Shoulder, HHF
21	3256-26	4	Washer-Flat
24	104-8301	14	Nut-HF, NI
26	139-5892	1	Decal-HOC
28	139-5804-03	1	Bracket-HOC
31	139-7452	1	Pedal-Foot Lift
35	139-2597	1	Screw-HHF
36	43-0940	4	Spacer

Tire and Caster Assembly

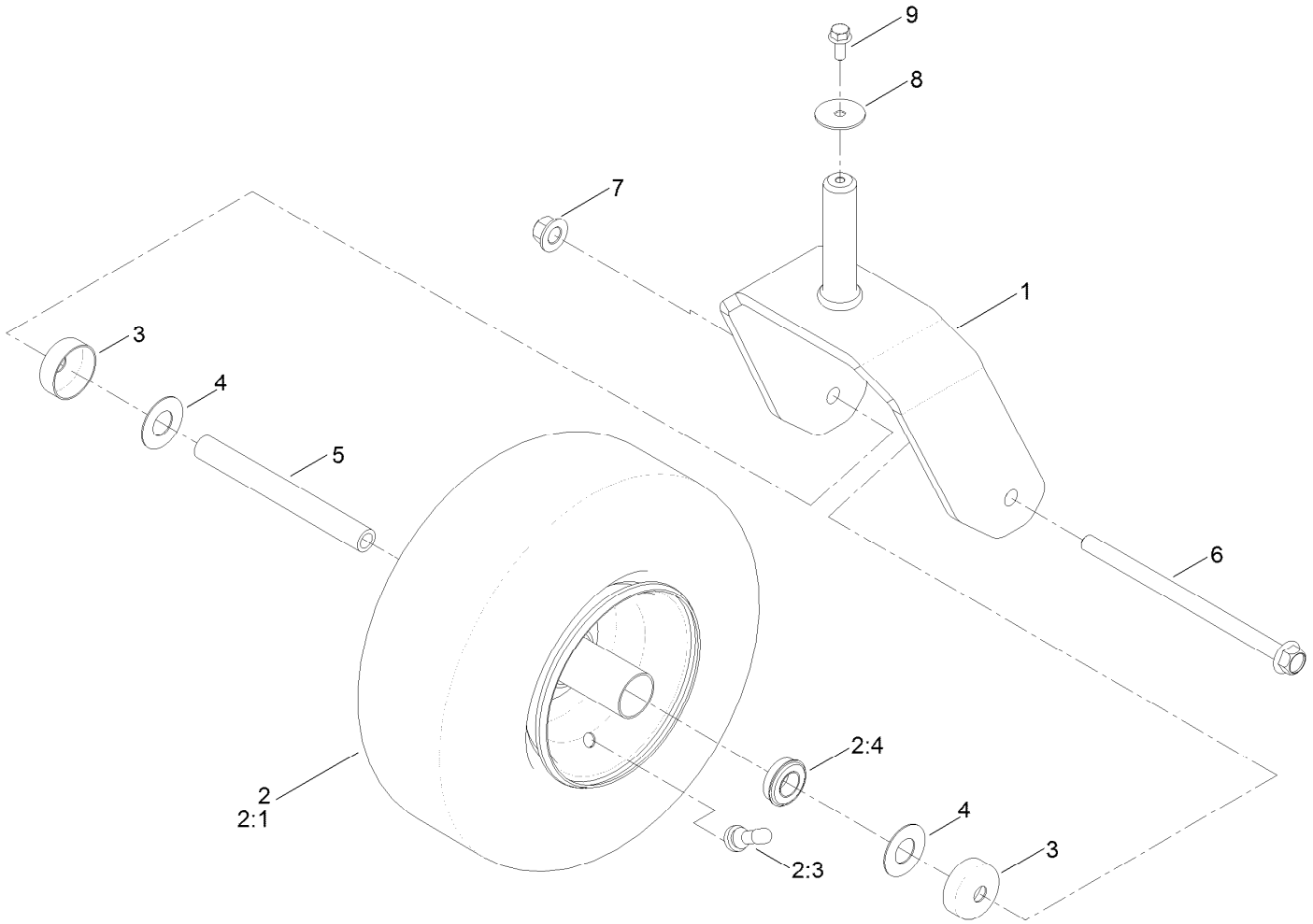

Tire and Caster Assembly (continued)

Ref.	Part Number	Qty.	Description
1	133-4375-01	2	Fork ASM
2	139-5844	2	Tire ASM
2:1	125-5581	1	Tire
2:3	232-27	1	Stem-Valve
2:4	136-4190	2	Bearing
2:99	232-46	1	Tube-Inner ●
3	138-7208	4	Guard-Seal
4	136-5590	4	Washer
5	133-4487	2	Spanner-Wheel
6	126-5389	2	Screw-HHF
7	99-5107	2	Nut-Lock
8	3256-68	2	Washer-Flat
9	3234-47	2	Screw-HHF

● Not illustrated

Traction Drive Assembly

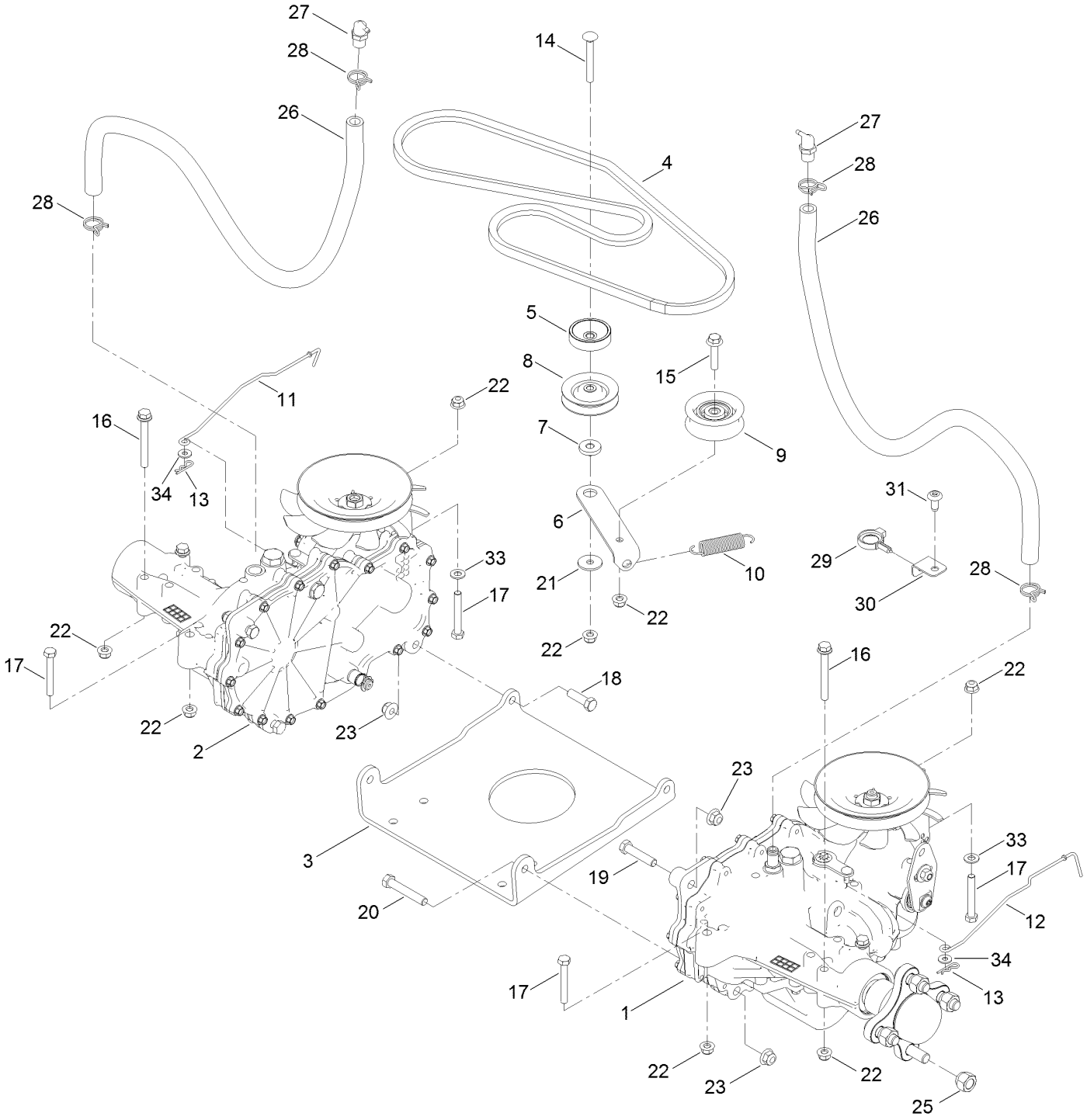

Traction Drive Assembly (continued)

Ref.	Part Number	Qty.	Description
1	139-7490	1	LH Hydro Transaxle ASM
2	139-7491	1	RH Hydro Transaxle ASM
3	137-7014-01	1	Plate- Hydro
4	140-2700	1	V-Belt
5	138-9809	1	Spacer
6	138-7276	1	Arm-Idler
7	138-7277	1	Spacer-Arm, Idler
8	68-0030	1	Idler
9	138-7597	1	Pulley-Idler, Flat
10	137-7040	1	Spring-Return, Pedal
11	130-7047	1	Rod-Bypass, RH
12	130-7048	1	Rod-Bypass, LH
13	3290-307	2	Pin-Cotter
14	3230-8	1	Screw-CARR
15	115-1794	1	Screw-HHF
16	138-7590	4	Screw-HHF
17	322-11	4	Screw-HH
18	323-7	2	Screw-HH
19	323-9	2	Screw-HH
20	323-11	2	Screw-HH
21	5-4460	1	Washer-Pivot
22	104-8300	10	Nut-HF, NI
23	104-8301	6	Nut-HF, NI
25	242-50	8	Nut-Lug
26	136-4182	2	Hose-Hydro
27	136-4183	2	Breather Kit
28	138-7211	4	Clamp-Hose
29	105-1853	2	Clamp-Hose
30	139-7464-03	2	Mount-Bracket
31	138-9753	2	Screw
33	3256-23	2	Washer-Plain
34	119-8952	2	Washer

LH Transaxle Assembly No. 139-7490

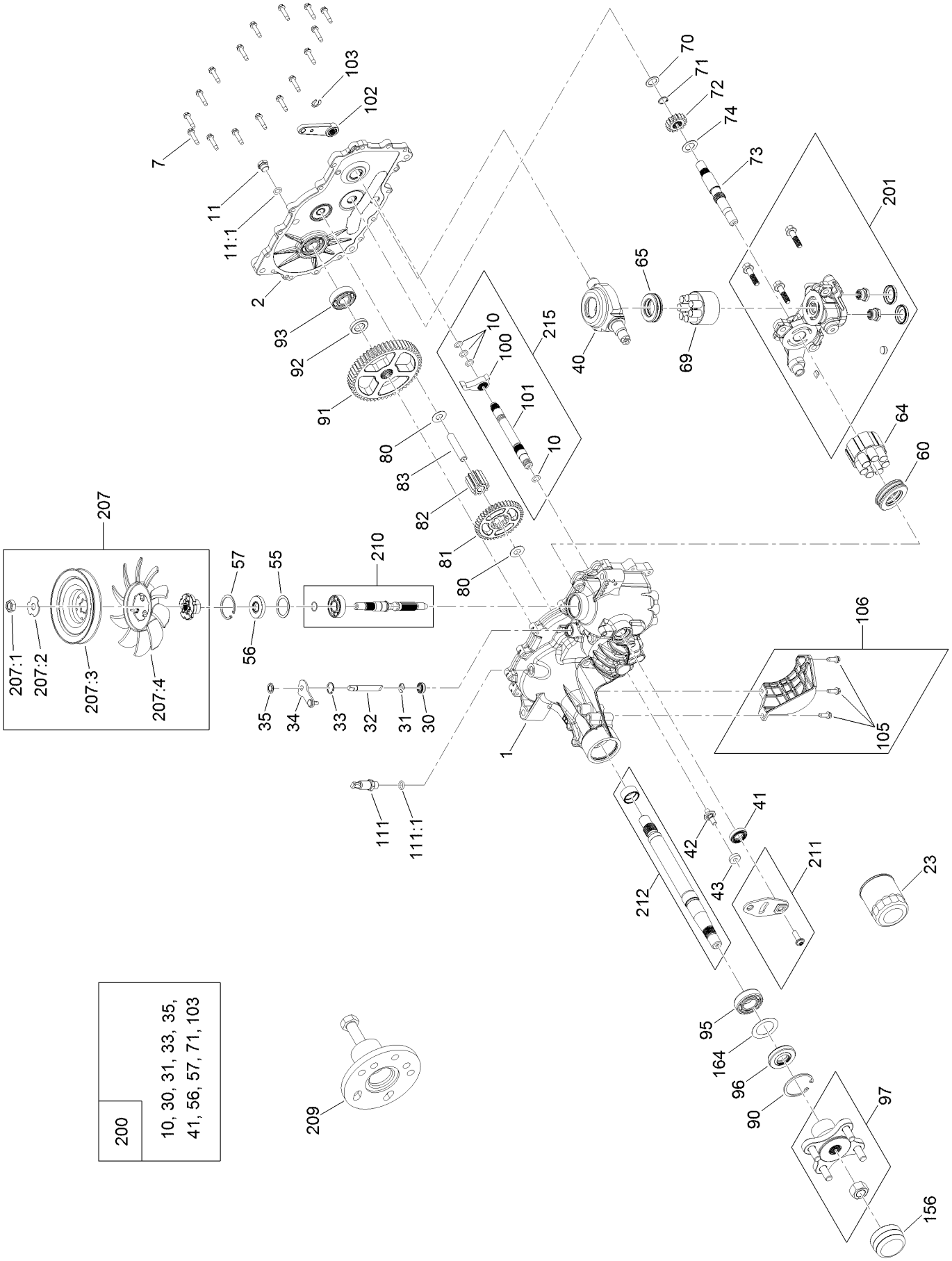

LH Transaxle Assembly No. 139-7490 (continued)

Ref.	Part Number	Qty.	Description
1	125-0037	1	Main Housing Kit
2	132-0939	1	RH Side Cover Kit
7	117-5359	16	Screw-HHF
10	114-1678	4	O-Ring
11	135-1140	1	Plug-Straight
11:1	135-1141	1	O-Ring
23	109-3321	1	Element-Oil Filter, HYD
30	106-8676	1	Seal-Lip
31	106-8677	1	Ring-Retaining, External
32	114-1685	1	Rod-Bypass
33	106-8679	1	Ring-Retaining, Internal
34	112-9852	1	Arm-Bypass
35	106-8681	1	Ring-Retaining, External
40	104-5304	1	Swashplate-Trunnion
41	104-5313	1	Seal-Lip
42	104-2116	1	Stud
43	112-9853	1	Puck-Friction
55	104-5308	1	Spacer
56	104-5310	1	Seal-Lip
57	104-5309	1	Ring-Retaining
60	112-4154	1	Bearing-Thrust
64	114-1689	1	Motor Cylinder Block Kit
65	94-6922	1	Bearing-Thrust
69	110-8561	1	Pump Block ASM
70	104-5339	1	Washer-Flat
71	104-5340	1	Ring-Retaining
72	121-5749	1	Gear-16T
73	114-1691	1	Shaft-Motor
74	104-5360	1	Washer
80	119-5541	2	Washer
81	125-0000	1	Gear-43T
82	114-1693	1	Gear-11T
83	104-5329	1	Pin-Jackshaft
90	104-2169	1	Ring-Retaining
91	114-1694	1	Gear-54T
92	120-7975	1	Spacer
93	137-2004	1	Bearing Kit
95	109-8110	1	Input Bearing Kit
96	104-2144	1	Seal
97	109-5939	1	Hub Kit
100	114-1697	1	Pawl-Brake
101	114-1698	1	Shaft-Brake, Inboard
102	125-0021	1	Handle-Brake
103	131-0906	1	Ring-Retaining, EXT
105	104-2120	3	Screw
106	120-7981	1	Guard-Filter, RH
111	109-3278	1	Adapter-Straight
111:1	237-42	1	O-Ring
156	115-5057	1	Cover-Nut, Axle
164	121-5745	1	Spacer
200	109-3537	1	Seal Kit
201	132-0940	1	RH Center Section Kit
207	135-7343	1	Fan And Pulley Kit
207:1	116-9714	1	Nut-HJ
207:2	116-9708	1	Washer-Slotted
207:3	135-7365	1	Pulley-5.34
207:4	135-7364	1	Fan 7.0 X 10 Blade
209	114-8467	1	Puller-Hub, 4 Bolt
210	114-8468	1	Input Shaft Kit
211	117-5362	1	Control Arm Kit
212	114-8470	1	Axle Shaft Kit
215	137-2007	1	Brake Shaft Kit

RH Transaxle Assembly No. 139-7491

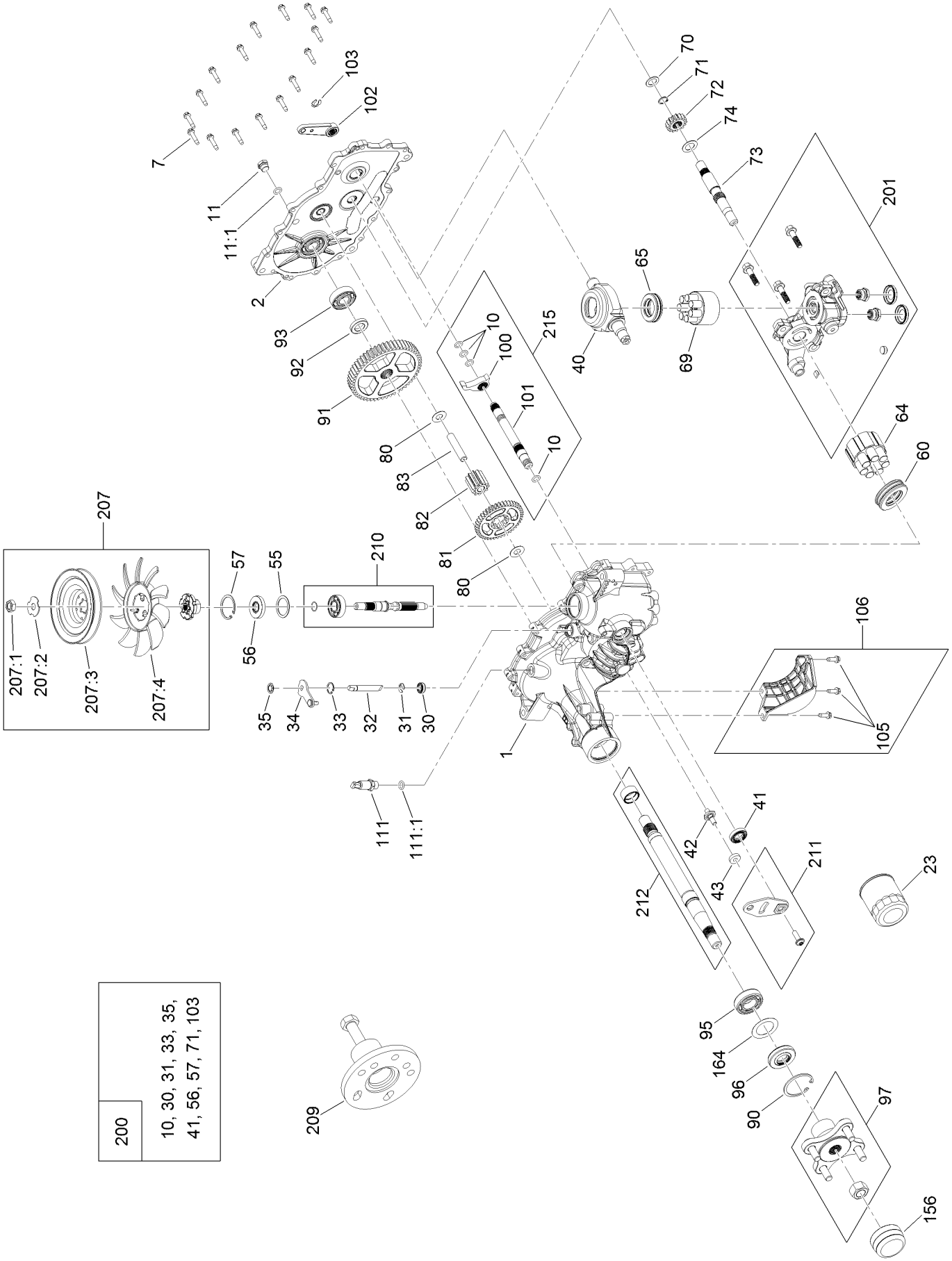

RH Transaxle Assembly No. 139-7491 (continued)

Ref.	Part Number	Qty.	Description
1	121-5748	1	Main Housing Kit
2	132-0938	1	LH Side Cover Kit
7	117-5359	16	Screw-HHF
10	114-1678	4	O-Ring
11	135-1140	1	Plug-Straight
11:1	135-1141	1	O-Ring
23	109-3321	1	Element-Oil Filter, HYD
30	106-8676	1	Seal-Lip
31	106-8677	1	Ring-Retaining, External
32	114-1685	1	Rod-Bypass
33	106-8679	1	Ring-Retaining, Internal
34	112-9852	1	Arm-Bypass
35	106-8681	1	Ring-Retaining, External
40	104-5304	1	Swashplate-Trunnion
41	104-5313	1	Seal-Lip
42	104-2116	1	Stud
43	112-9853	1	Puck-Friction
55	104-5308	1	Spacer
56	104-5310	1	Seal-Lip
57	104-5309	1	Ring-Retaining
60	112-4154	1	Bearing-Thrust
64	114-1689	1	Motor Cylinder Block Kit
65	94-6922	1	Bearing-Thrust
69	110-8561	1	Pump Block ASM
70	104-5339	1	Washer-Flat
71	104-5340	1	Ring-Retaining
72	121-5749	1	Gear-16T
73	114-1691	1	Shaft-Motor
74	104-5360	1	Washer
80	119-5541	2	Washer
81	125-0000	1	Gear-43T
82	114-1693	1	Gear-11T
83	104-5329	1	Pin-Jackshaft
90	104-2169	1	Ring-Retaining
91	114-1694	1	Gear-54T
92	120-7975	1	Spacer
93	137-2004	1	Bearing Kit
95	109-8110	1	Input Bearing Kit
96	104-2144	1	Seal
97	109-5939	1	Hub Kit
100	114-1697	1	Pawl-Brake
101	114-1698	1	Shaft-Brake, Inboard
102	125-0021	1	Handle-Brake
103	131-0906	1	Ring-Retaining, EXT
105	104-2120	3	Screw
106	120-7979	1	Guard-Filter, LH
111	109-3278	1	Adapter-Straight
111:1	237-42	1	O-Ring
156	115-5057	1	Cover-Nut, Axle
164	121-5745	1	Spacer
200	109-3537	1	Seal Kit
201	125-0036	1	Center Section Kit
207	135-7343	1	Fan And Pulley Kit
207:1	116-9714	1	Nut-HJ
207:2	116-9708	1	Washer-Slotted
207:3	135-7365	1	Pulley-5.34
207:4	135-7364	1	Fan 7.0 X 10 Blade
209	114-8467	1	Puller-Hub, 4 Bolt
210	114-8468	1	Input Shaft Kit
211	117-5362	1	Control Arm Kit
212	114-8470	1	Axle Shaft Kit
215	137-2007	1	Brake Shaft Kit

Parking Brake Assembly

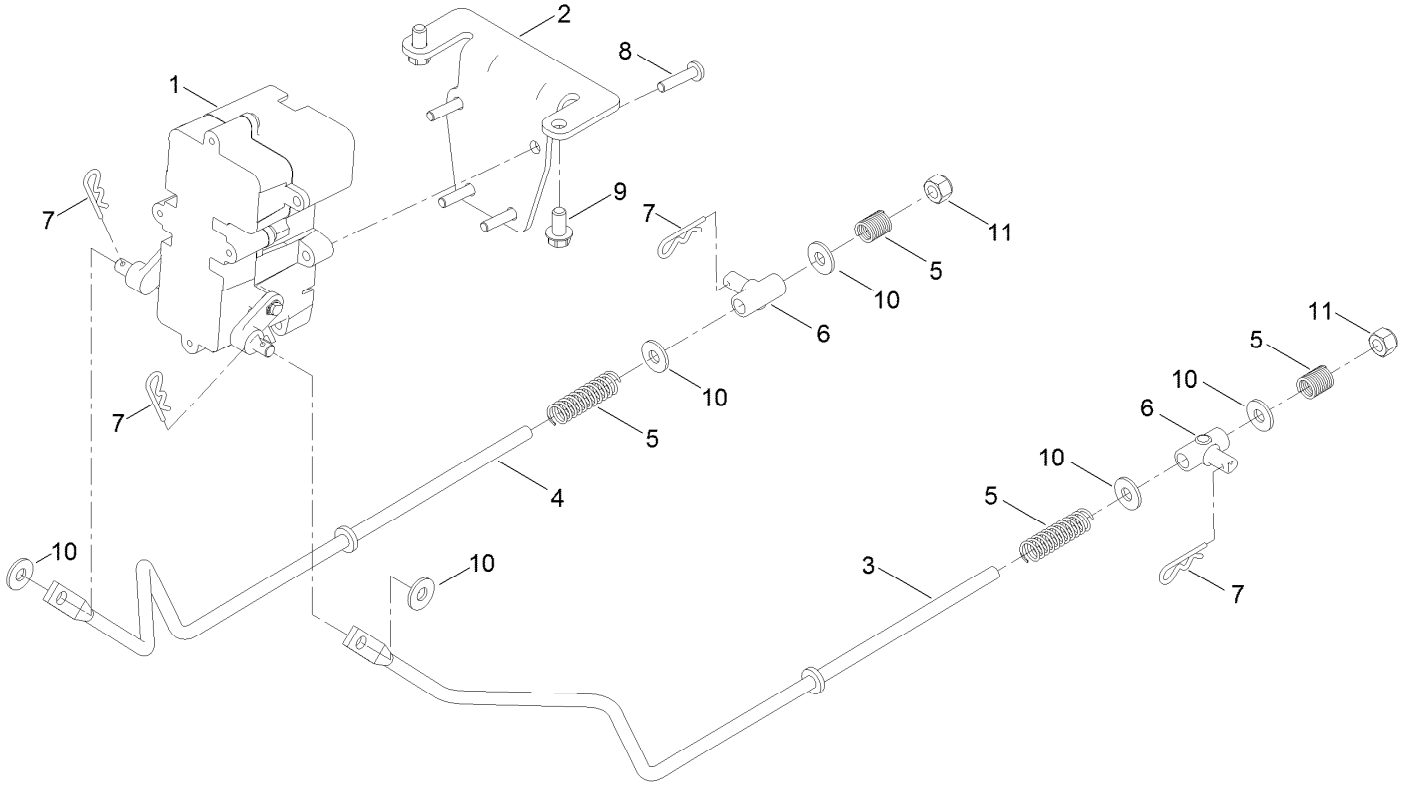

Parking Brake Assembly (continued)

Ref.	Part Number	Qty.	Description
1	138-2514	1	Brake Box ASM
2	133-9284-03	1	Bracket-Mount, Brake
3	138-7524	1	Rod-Brake,LH
4	138-7523	1	Rod-Brake,RH
5	121-5654	4	Spring-Compression
6	119-8857	2	Mount-Pivot
7	3290-307	4	Pin-Cotter
8	32144-36	4	Screw-PPH
9	32144-4	2	Screw-HWH
10	119-8952	6	Washer
11	3296-42	2	Nut-Lock, NI

Rear Tire Assembly

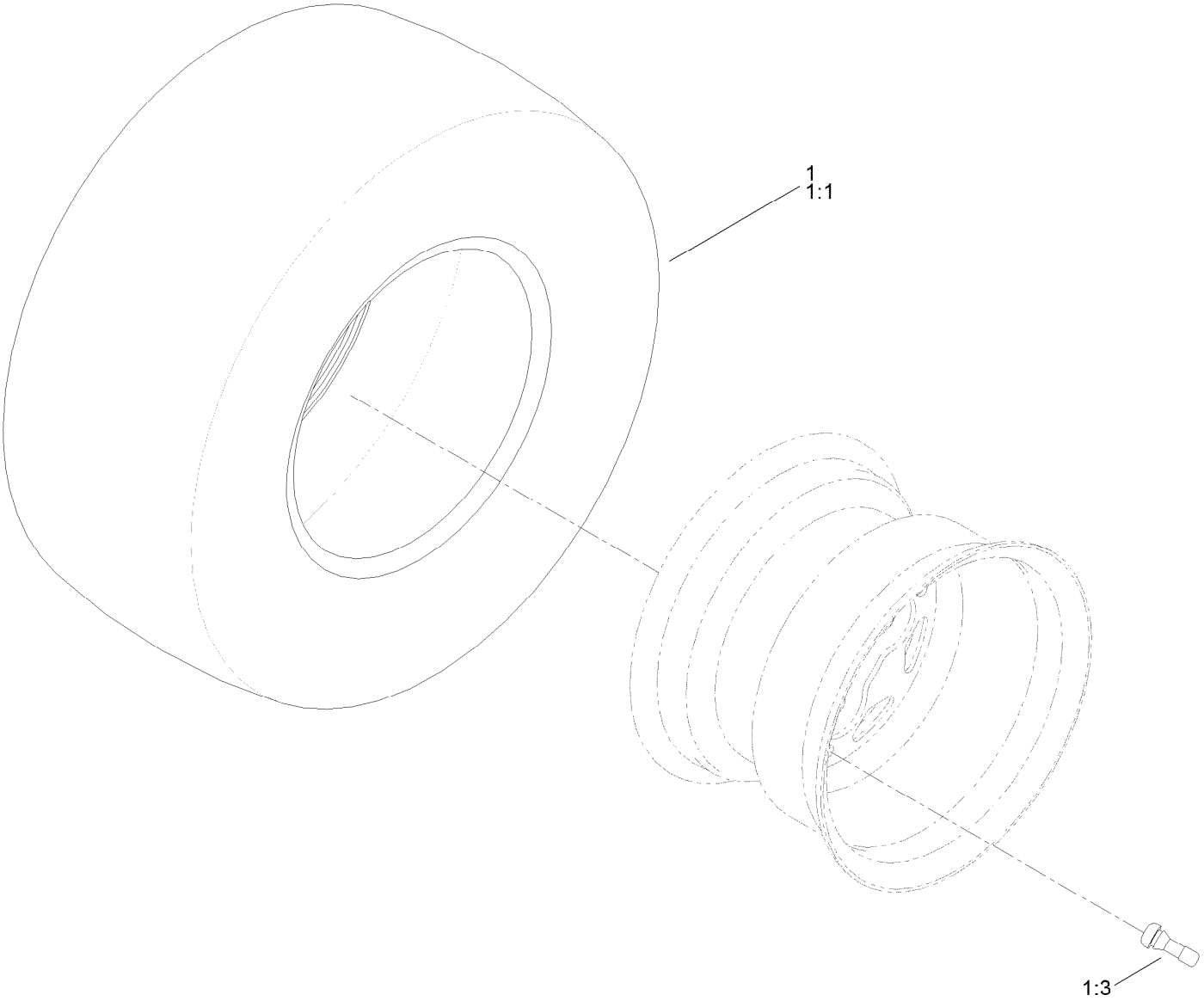

Rear Tire Assembly (continued)

Ref.	Part Number	Qty.	Description
1	139-5849	2	Tire ASM
1:1	133-9293	1	Tire
1:3	232-27	1	Stem-Valve
1:99	105-4070	1	Tube-Inner ●

● Not illustrated

Seat Pan Assembly

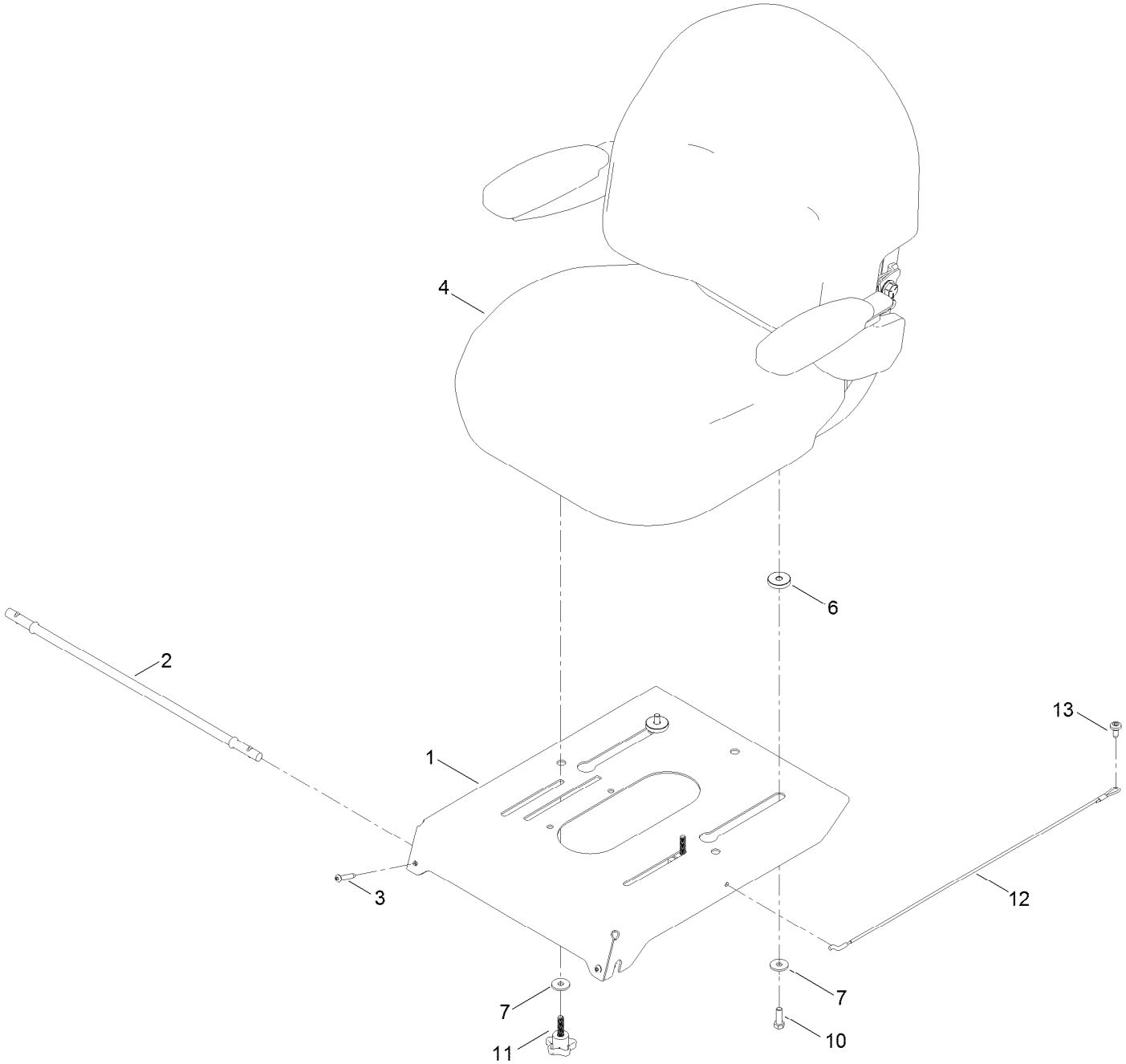

Seat Pan Assembly (continued)

Ref.	Part Number	Qty.	Description
1	138-9775-03	1	Pan-Seat, Deluxe
2	138-7555	1	Rod-Pivot
3	108-0035	2	Screw
4	140-5043	1	Seat ASM
6	139-2377	2	Spacer-Stepped
7	1-603716	4	Washer-Friction
10	322-5	2	Screw-HH
11	139-2401	2	Knob
12	139-2398	1	Cable-Lanyard
13	120-7950	1	Screw-Torx

Seat Assembly No. 140-5043

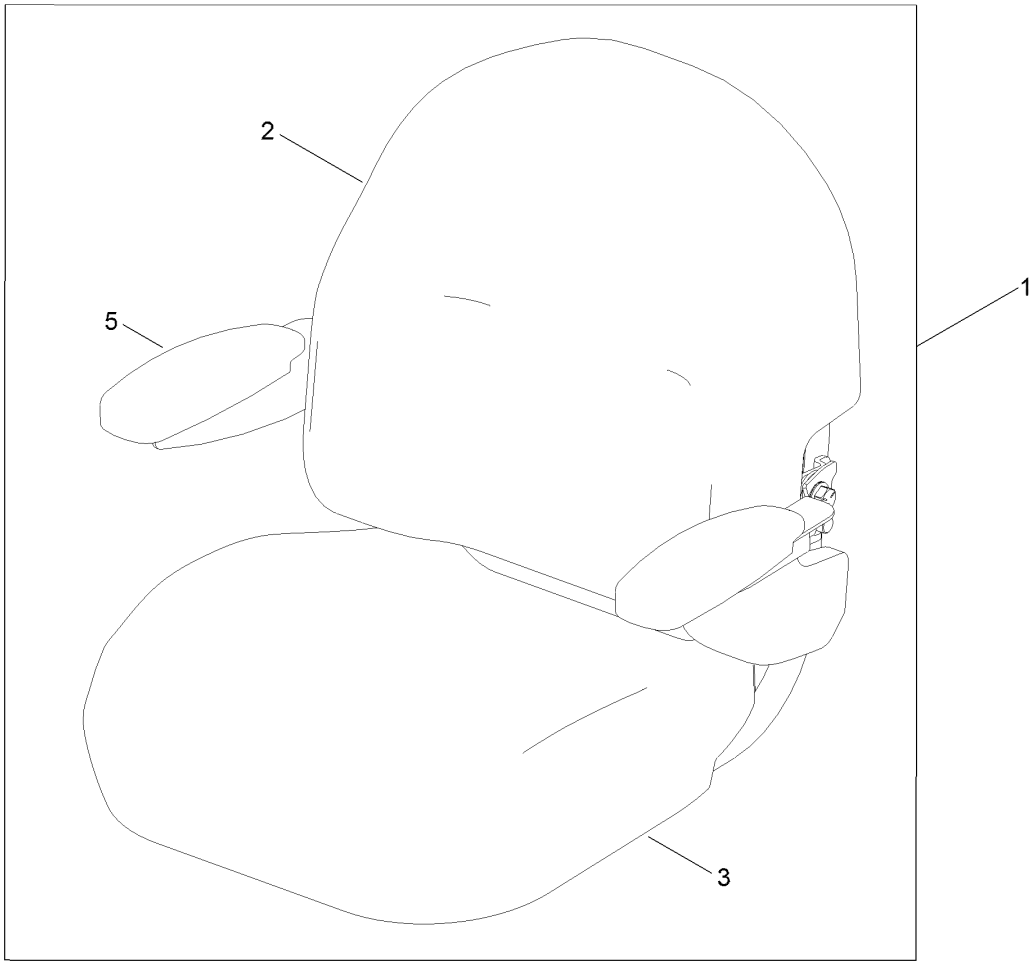

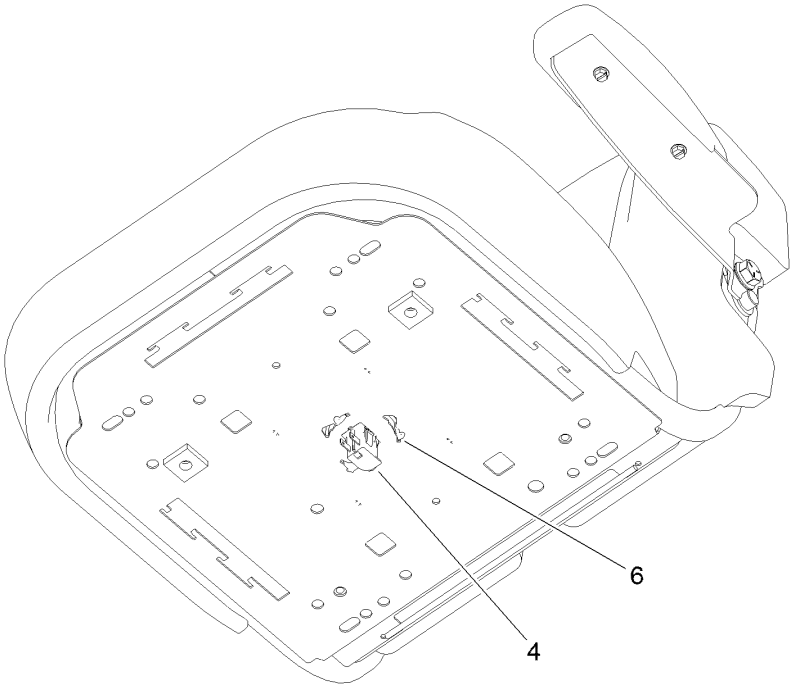

Seat Assembly No. 140-5043 (continued)

Ref.	Part Number	Qty.	Description
1	139-7546	1	Seat ASM
2	140-5041	1	Cover-Seat Back
3	140-5042	1	Cover-Seat Base
4	82-2190	1	Switch-Bail
5	139-5823	1	Arm Rest Kit
6	140-3468	1	Cap-Switch, Actuator

Motion Control Assembly

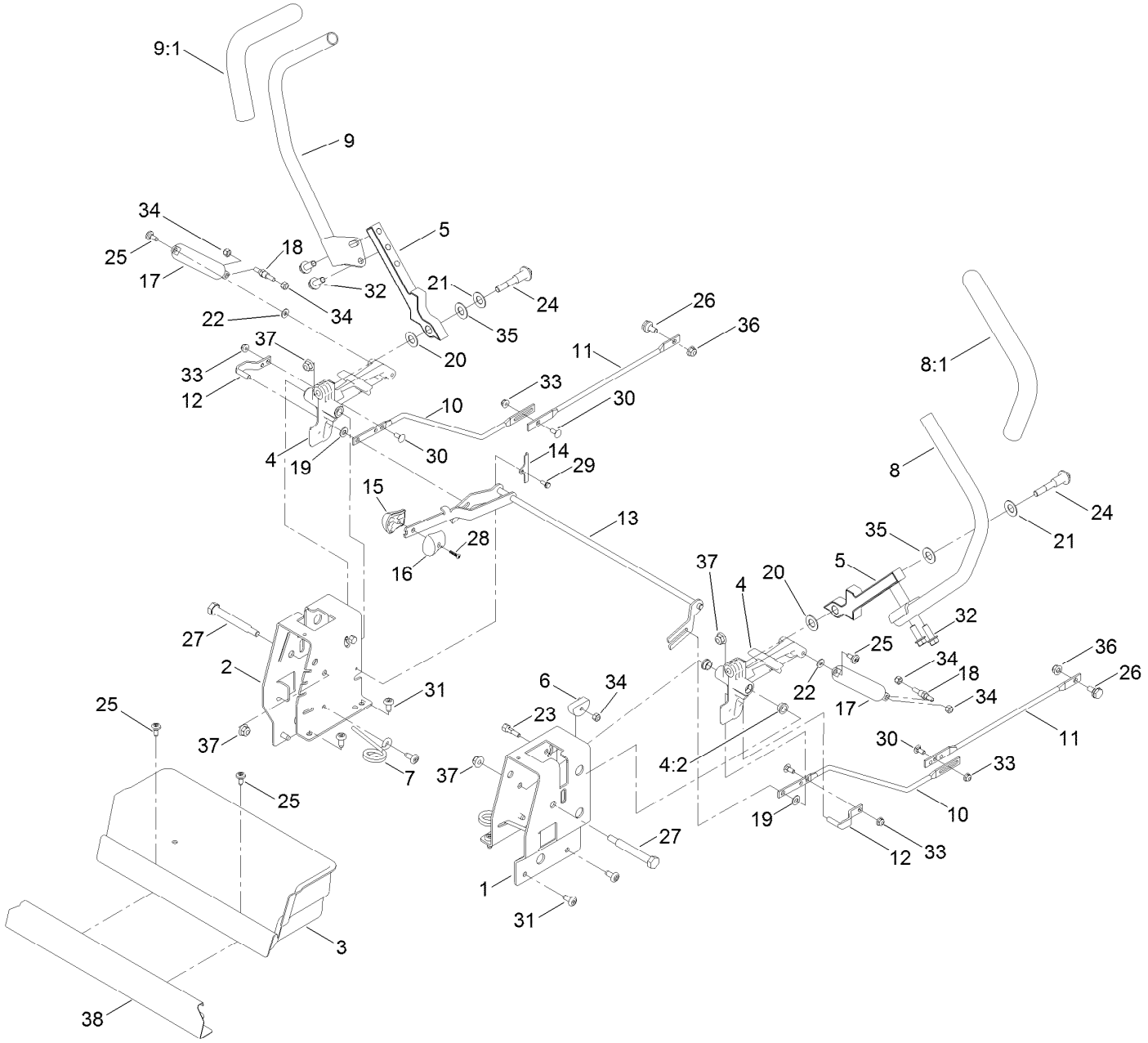

Motion Control Assembly (continued)

Ref.	Part Number	Qty.	Description
1	138-7598-03	1	Plate-Control Box, LH
2	138-7599-03	1	Plate-Control Box, RH
3	139-3279	1	Box-Storage
4	119-3470	2	Actuator Arm ASM
4:2	256-156	2	Bushing-Flange
5	133-9299-05	2	Arm-Control
6	139-5803	2	Eccentric
7	138-7539	2	Spring-Torsion
8	133-7055	1	Handle-Control, LH
8:1	121-0726	1	Grip
9	133-7057	1	Handle-Control, RH
9:1	121-0726	1	Grip
10	138-2580	2	Rod-Hydro, Front
11	138-2579	2	Rod-Hydro, Rear
12	121-1753	2	Pin-Rod, Hydro
13	138-9750	1	Speed Control ASM
14	138-7541	2	Plate-Retainer
15	132-9368	1	Knob-RH
16	132-9369	1	Knob-LH
17	132-6853	2	Damper-Non Cavitating
18	138-7215	2	Stud-Damper

Ref.	Part Number	Qty.	Description
19	93-6079	2	Spacer-Nylon
20	120-2273	2	Washer-Nylon
21	119-8925	2	Washer-Belleville
22	119-8952	2	Washer
23	139-5811	2	Bolt-Pivot, Eccentric
24	117-1198	2	Bolt-Pivot
25	120-7950	4	Screw-Torx
26	37-8771	2	Bolt-Shoulder, HF
27	115-5099	2	Bolt-Pivot
28	94-4496	1	Screw-PPH
29	32144-1	2	Screw-Taptite
30	3229-11	4	Screw-CARR
31	138-9753	10	Screw
32	3234-42	4	Screw-HHF
33	104-7201	4	Nut-HF, NI
34	3296-42	6	Nut-Lock, NI
35	117-1240	2	Washer
36	104-8300	2	Nut-HF, NI
37	104-8301	4	Nut-HF, NI
38	139-3280-01	1	Plate-Kick

Engine and Muffler Assembly

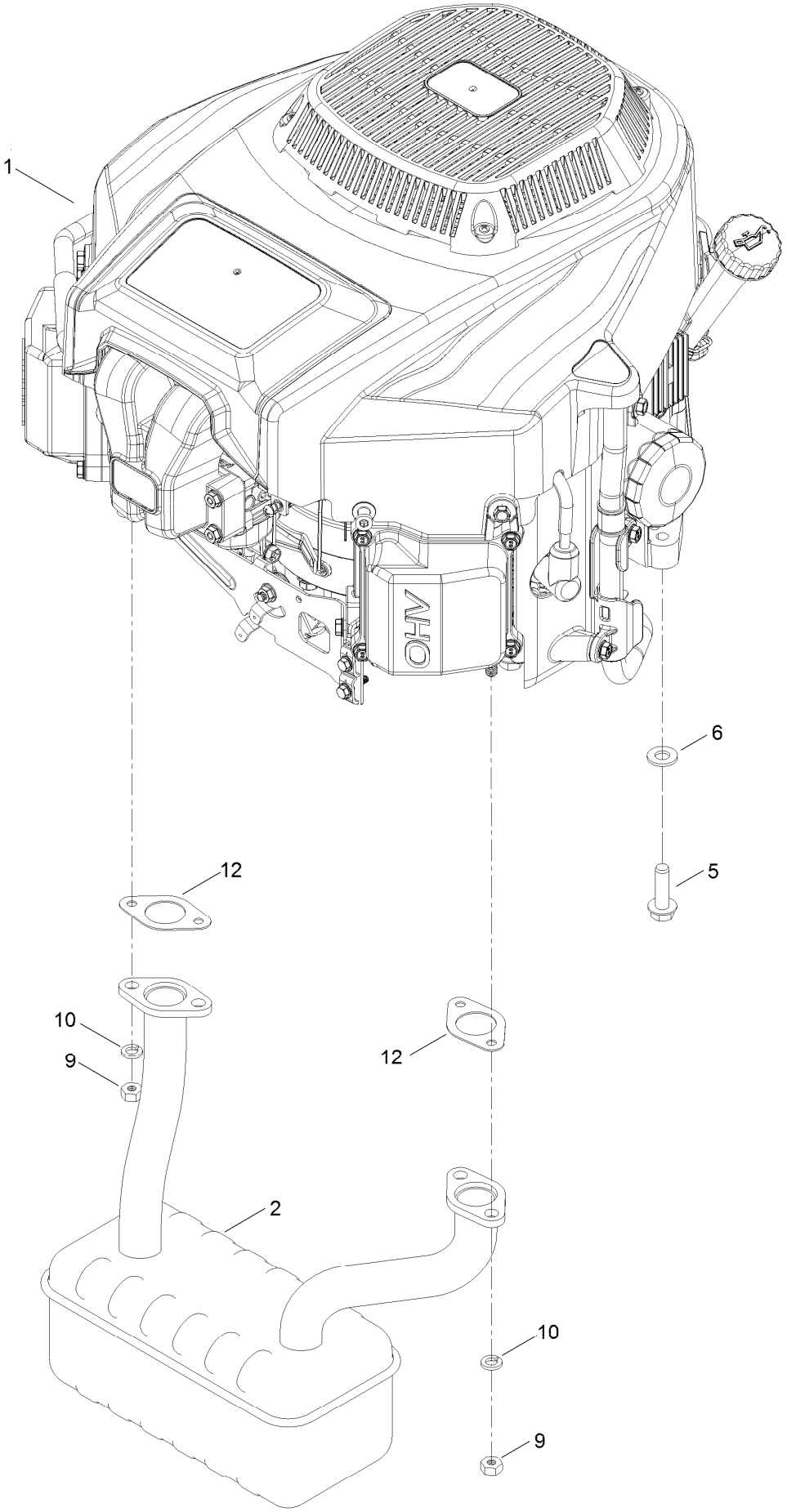

Engine and Muffler Assembly (continued)

Ref.	Part Number	Qty.	Description
1	136-7818	1	Engine-2P77F
2	139-5865	1	Muffler
5	32144-109	4	Screw-Thd
6	3256-24	3	Washer-Flat
9	121-0199	4	Nut-HH
10	127-9279	4	Washer-Lock, Split
12	120-4317	2	Gasket-Exhaust

Fuel System Assembly with Non-Canister Style Air Filter

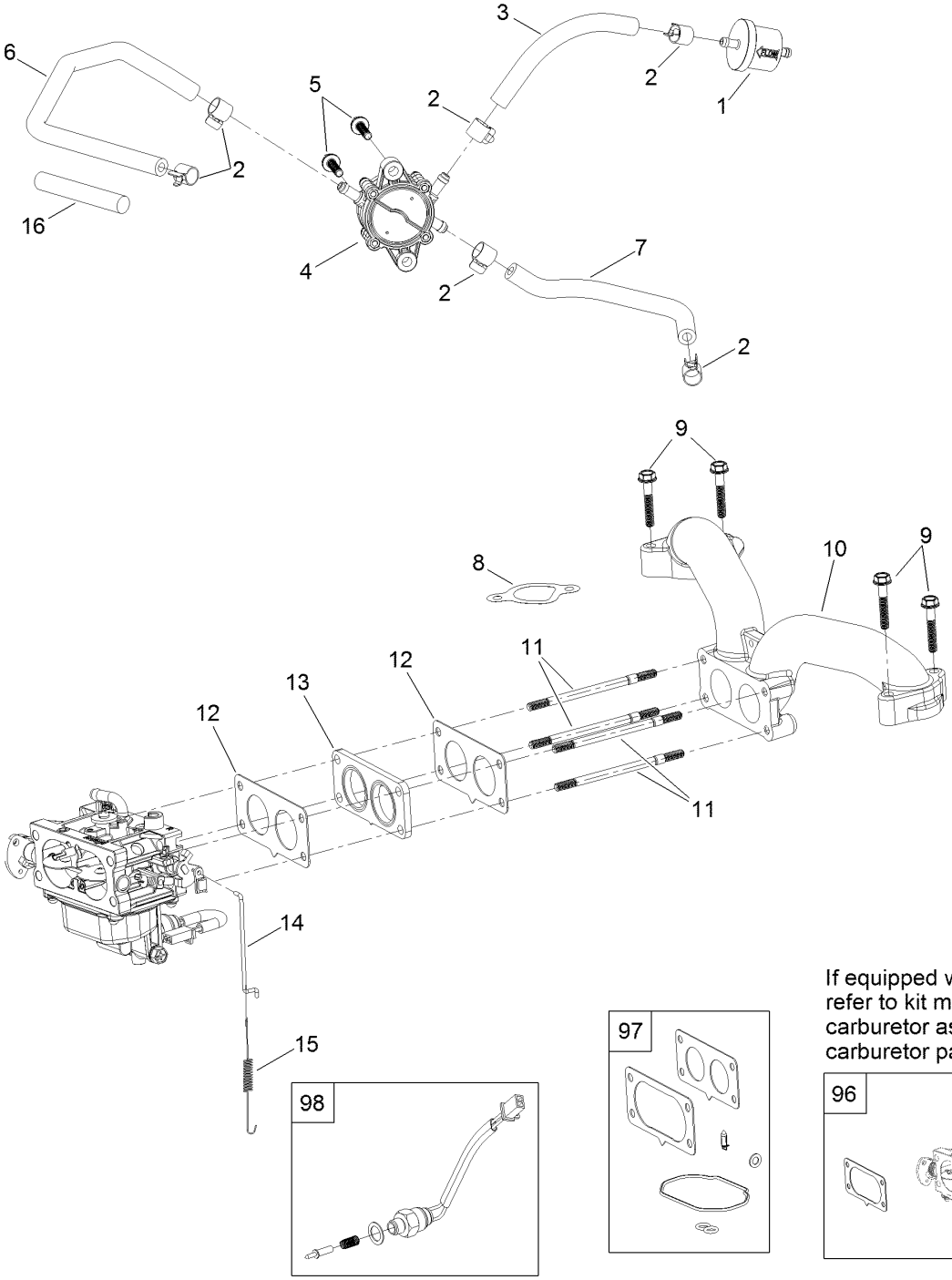

If equipped with canister type air filter refer to kit model 135-6195 for carburetor assembly and internal carburetor parts.

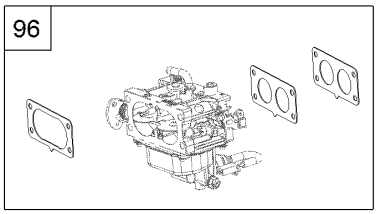

Fuel System Assembly with Non-Canister Style Air Filter (continued)

Ref.	Part Number	Qty.	Description
1	133-1563	1	Filter-Fuel
2	120-4251	6	Clamp-Fuel Line
3	120-4371	1	Line-Fuel
4	127-9206	1	Pump-Fuel
5	120-4225	2	Screw-HHF
6	127-9205	1	Hose-Fuel
7	127-9207	1	Hose-Fuel
8	127-9230	2	Gasket-Intake
9	120-4284	4	Screw-HHF
10	127-9244	1	Manifold-Intake
11	127-9245	4	Stud
12	127-9246	2	Gasket-Carburetor
13	127-9247	1	Insulator-Carburetor
14	133-9963	1	Linkage-Throttle
15	133-9964	1	Spring-Return, Throttle
16	127-9355	1	Sleeve-Fuel Line Protector
96	136-7840	1	Carburetor Replacement Kit
97	127-9290	1	Carburetor Repair Kit
98	127-9292	1	Solenoid Kit
99	136-7837	1	High Altitude Kit ●

● Not illustrated

Carburetor Assembly

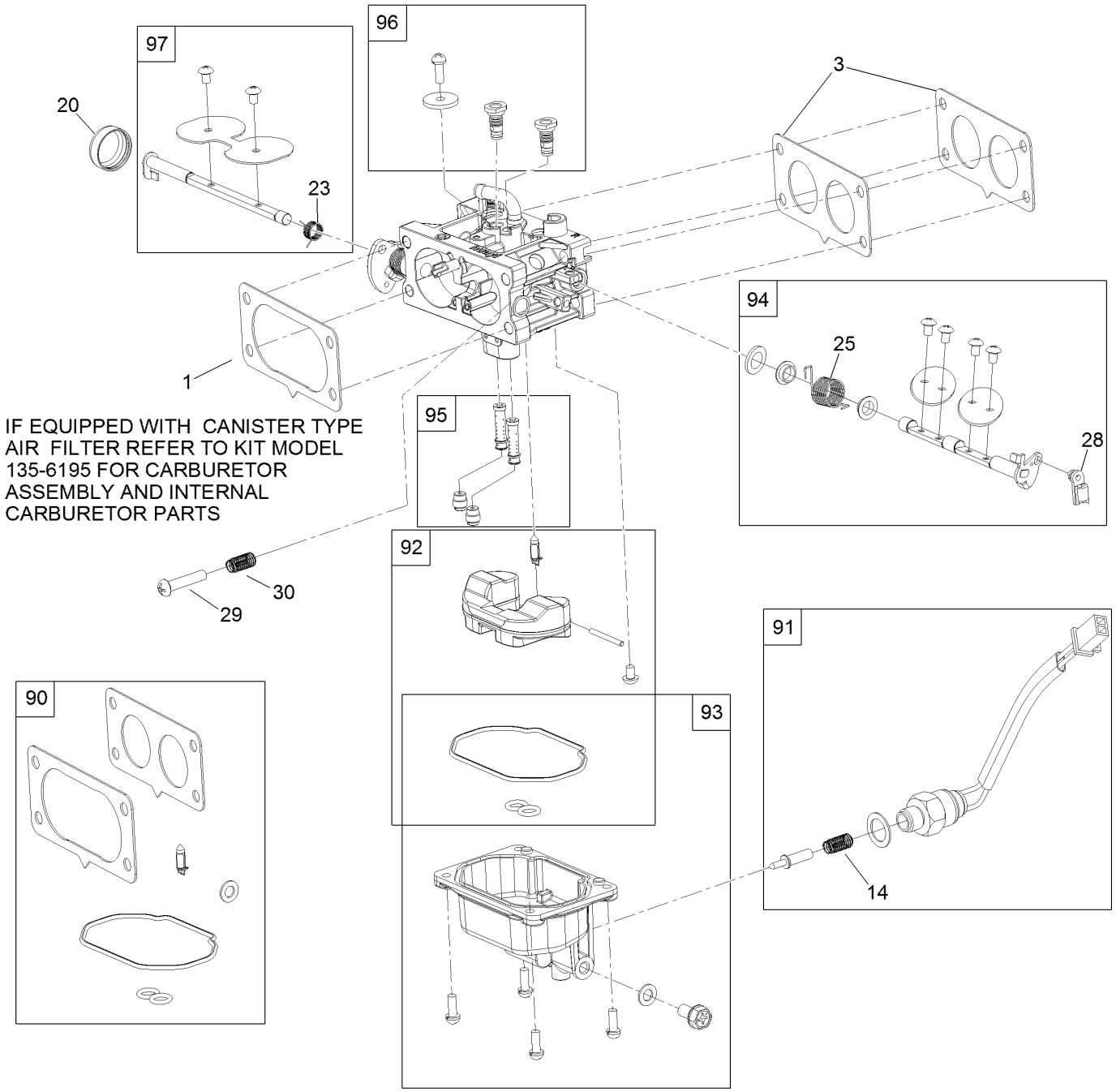

Carburetor Assembly (continued)

Ref.	Part Number	Qty.	Description
1	127-9251	1	Gasket-Carburetor
3	127-9246	2	Gasket-Carburetor
14	127-9319	1	Spring
20	127-9325	1	Cover-Shaft, Choke
23	127-9328	1	Spring
25	127-9330	1	Spring
28	127-9333	1	Clamp-Lock
29	127-9334	1	Screw-PPH
30	127-9335	1	Spring

Ref.	Part Number	Qty.	Description
90	127-9290	1	Carburetor Repair Kit
91	127-9292	1	Solenoid Kit
92	127-9340	1	Float Kit
93	127-9341	1	Bowl Kit
94	133-9817	1	Throttle Shaft Kit
95	136-7844	1	Nozzle And Jet Kit
96	136-7899	1	Idle Jet Kit
97	127-9345	1	Choke Shaft Kit

Air Intake and Filtration Assembly

IF EQUIPPED WITH CANISTER TYPE AIR FILTER
REFER TO KIT MODEL 135-6195 TO LOOK UP PARTS

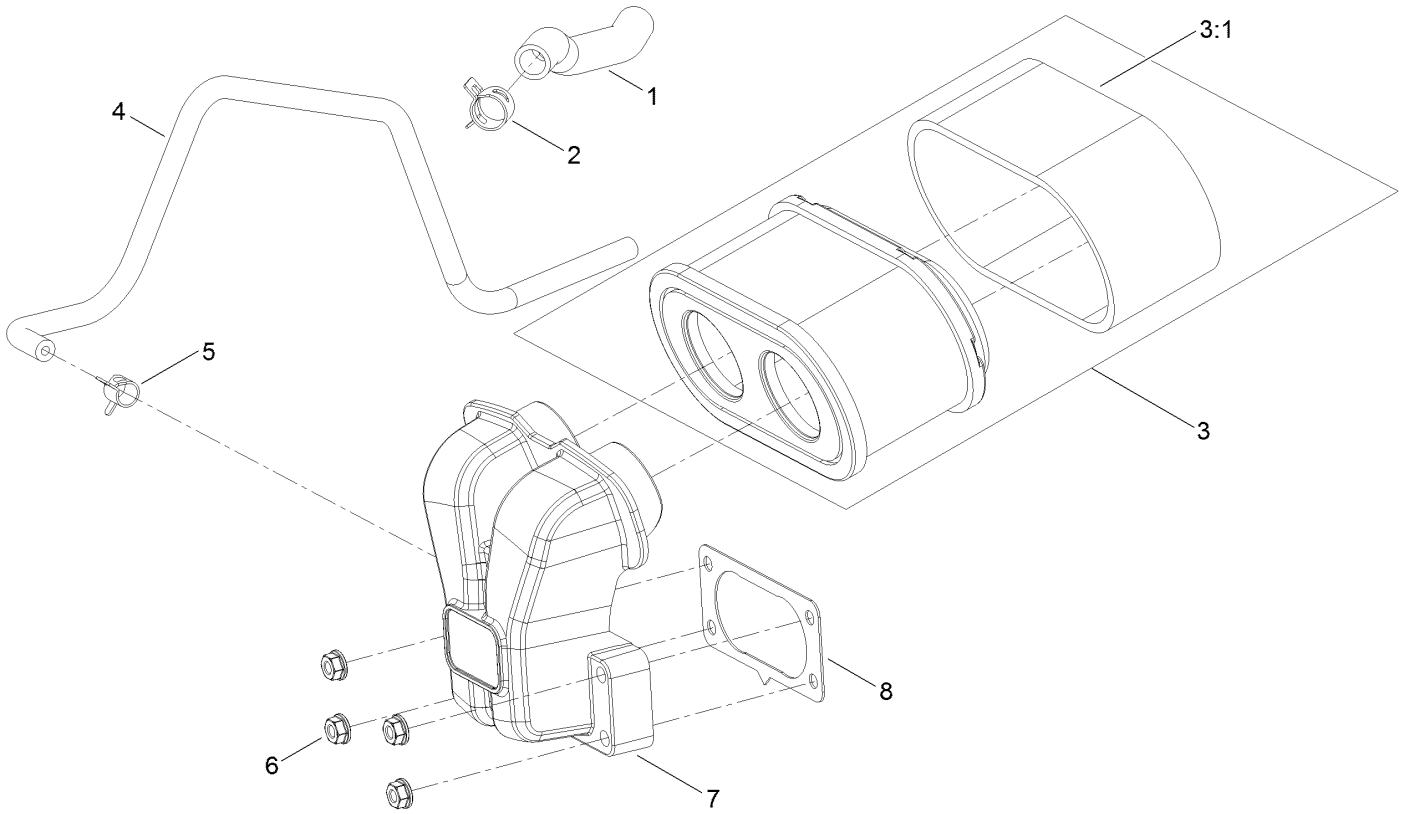

Air Intake and Filtration Assembly (continued)

Ref.	Part Number	Qty.	Description
1	127-9235	1	Tube-Breather
2	127-9234	2	Clamp-Hose
3	136-7806	1	Air Filter Kit
3:1	136-7804	1	Prefilter
4	127-9253	1	Hose-Fuel
5	127-9187	1	Clamp-Hose
6	120-4236	4	Nut-Flange
7	127-9047	1	Manifold-Filter, Air
8	127-9251	1	Gasket-Carburetor

Ignition and Cooling Fan

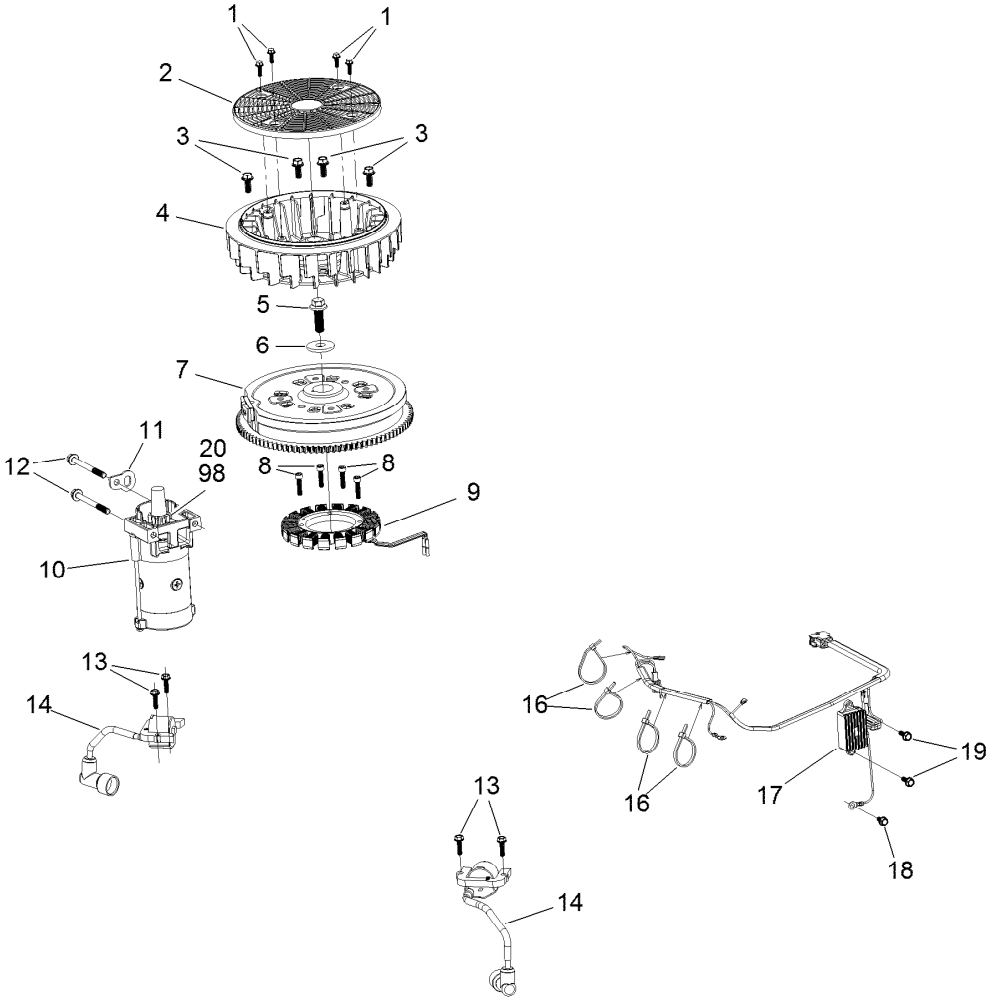

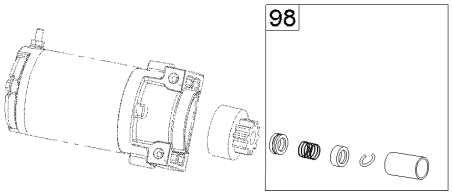

Ignition and Cooling Fan (continued)

Ref.	Part Number	Qty.	Description
1	127-9197	4	Screw-HWH
2	127-9198	1	Screen-Rotating
3	127-9199	4	Screw-HWH
4	127-9200	1	Fan-Cooling
5	127-9201	1	Screw-HWH
6	127-9202	1	Washer-Spring
7	127-9306	1	Flywheel
8	127-9210	4	Screw-HSH
9	136-7876	1	Alternator
10	136-7880	1	Motor-Starter
11	127-9208	1	Bracket-Lift
12	120-4231	2	Screw-HHF
13	121-0007	4	Bolt-Flange
14	136-7883	2	Ignition Coil ASM
16	127-9220	4	Tie-Zip
17	136-7879	1	Regulator-Voltage, W/Harness
18	120-4216	1	Screw-HHF
19	120-4232	2	Screw-HHF
20	133-1562	1	Pinion-Starter
98	133-1566	1	Starter Repair Kit

Crankcase and Crankshaft Assembly

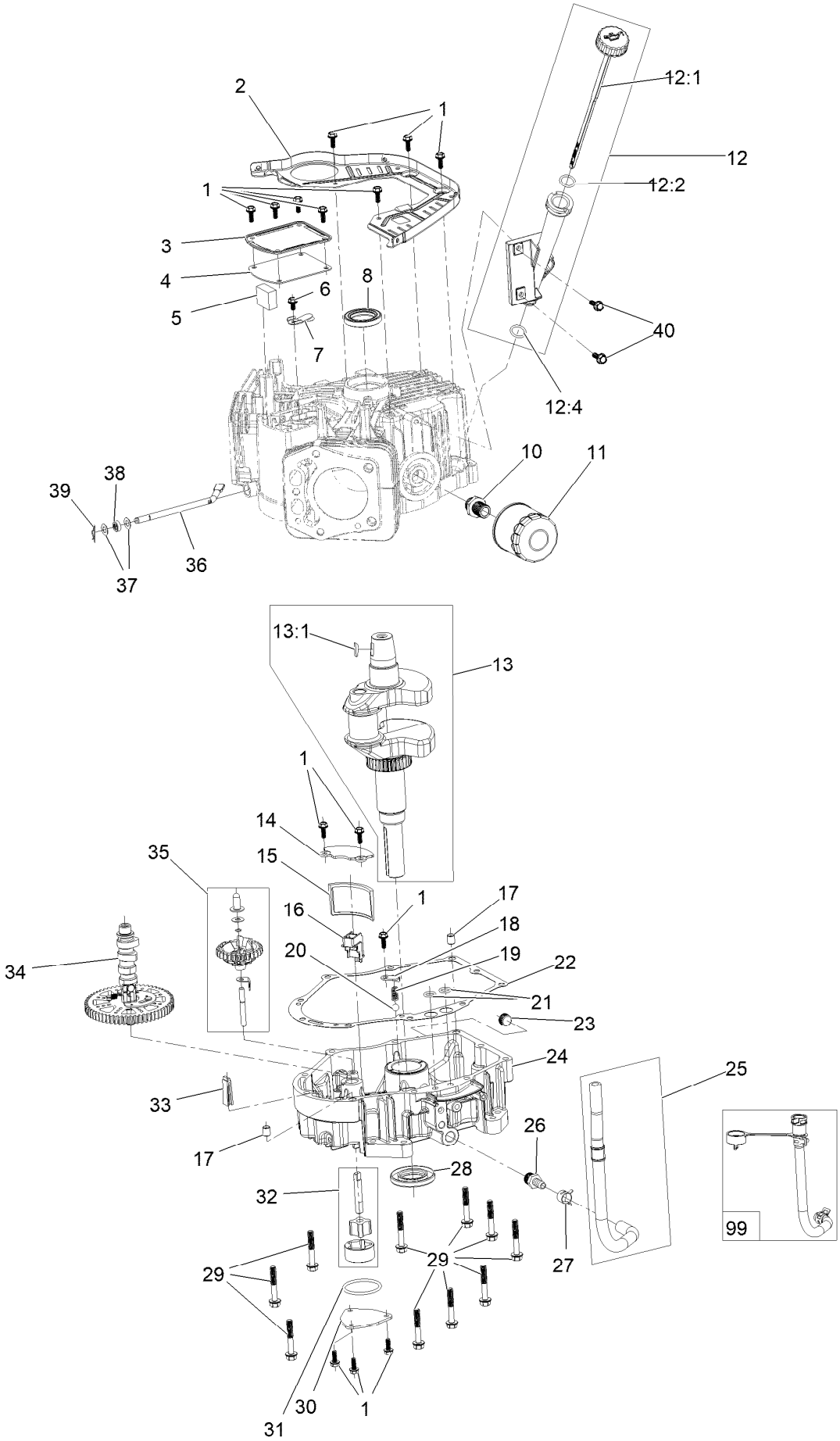

Crankcase and Crankshaft Assembly (continued)

Ref.	Part Number	Qty.	Description
1	120-4232	14	Screw-HHF
2	127-9212	1	Baffle
3	127-9213	1	Cover-Breather
4	127-9214	1	Gasket-Breather
5	127-9215	1	Filter-Breather
6	120-4216	1	Screw-HHF
7	127-9217	1	Valve-Breather
8	120-4267	1	Seal-Oil
10	136-7884	1	Adaptor-Filter, Oil
11	136-7848	1	Filter-Oil
12	127-9218	1	Oil Tube ASM
12:1	127-9283	1	Dipstick
12:2	127-9284	1	O-Ring
12:4	127-9286	1	O-Ring
13	127-9255	1	Crankshaft
13:1	120-4320	1	Key-Woodruff
14	127-9261	1	Cover-Screen, Oil
15	127-9262	1	Screen-Oil
16	127-9263	1	Retainer-Screen
17	120-4274	2	Pin-Dowel
18	127-9264	1	Plate-Retainer
19	127-9265	1	Spring
20	127-9266	1	Valve-Ball
21	120-4262	2	O-Ring
22	127-9267	1	Gasket-Cover, Crankcase
23	133-9805	1	Plug-Drain
24	133-9806	1	Cover-Crankcase
25	127-9293	1	Oil Drain Hose ASM
26	127-9275	1	Fitting-Hose
27	127-9276	1	Clamp-Hose
28	127-9271	1	Seal
29	121-0473	10	Screw-HHF
30	127-9274	1	Cover-Oil Pump
31	127-9273	1	O-Ring
32	127-9272	1	Oil Pump ASM
33	120-4275	1	Deflector-Oil, Rubber
34	133-1568	1	Camshaft
35	136-7882	1	Governor ASM
36	127-9238	1	Shaft-Governor
37	120-4258	2	Washer-Plain
38	120-4257	1	Seal-Oil
39	120-4256	1	Pin-Hair
40	120-4232	2	Screw-HHF
99	144-0976	1	Oil Drain Service Kit

Governor Control Assembly

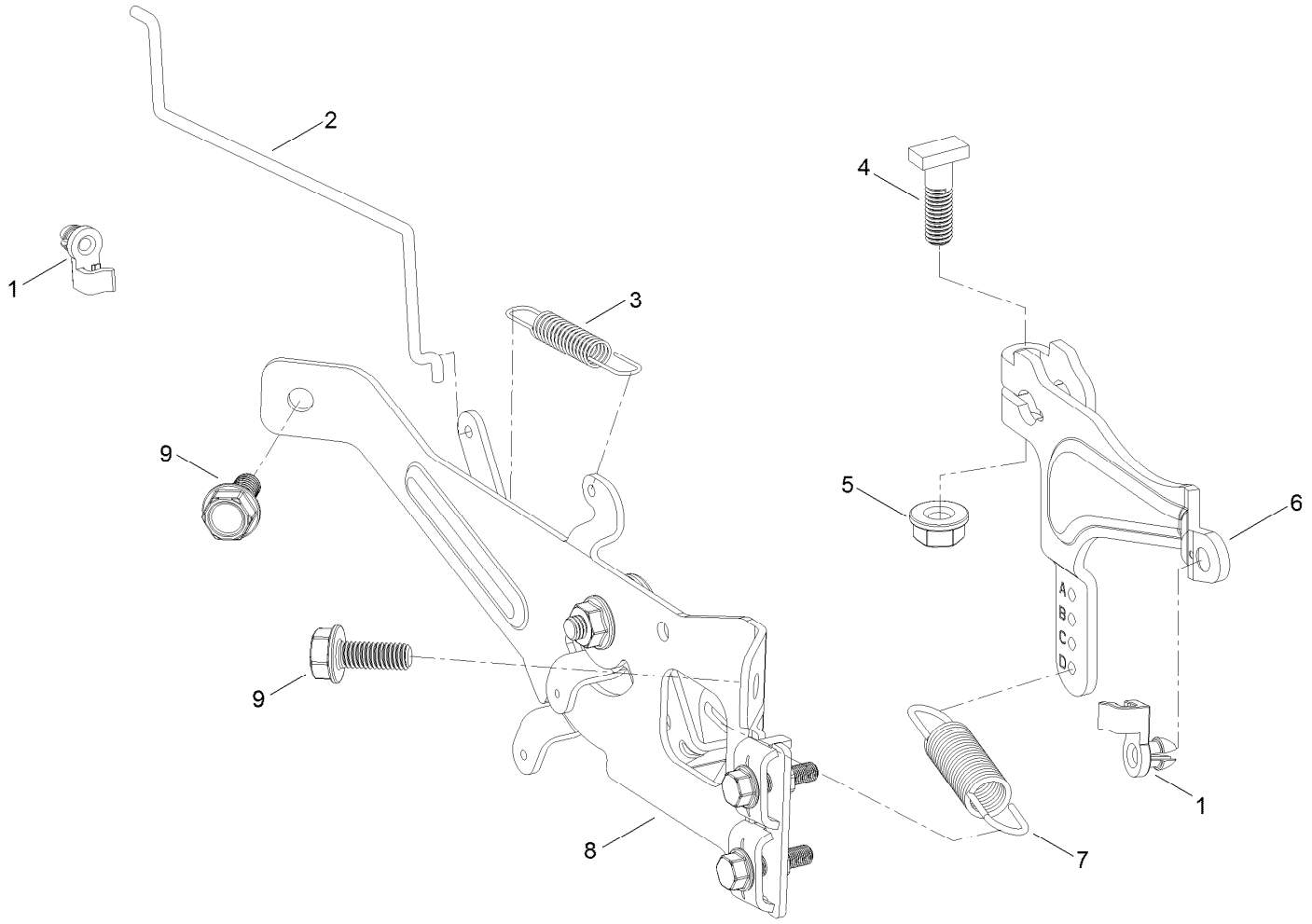

Governor Control Assembly (continued)

Ref.	Part Number	Qty.	Description
1	127-9250	2	Clip-Linkage
2	127-9242	1	Linkage-Choke
3	127-9241	1	Spring-Governor
4	120-4238	1	Bolt-Arm, Governor
5	120-4236	1	Nut-Flange
6	133-9961	1	Arm-Governor
7	133-9962	1	Spring-Governor
8	133-1570	1	Control Plate ASM
9	120-4232	2	Screw-HHF

Piston and Cylinder Head Assembly

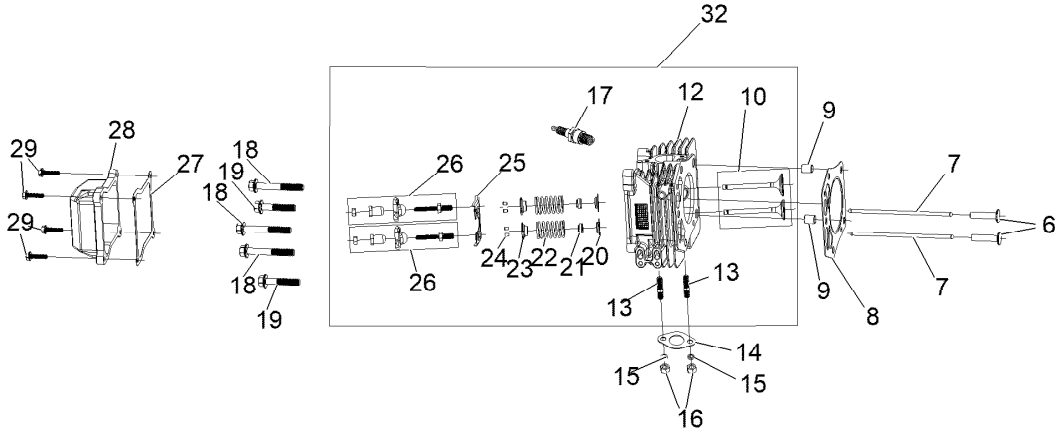

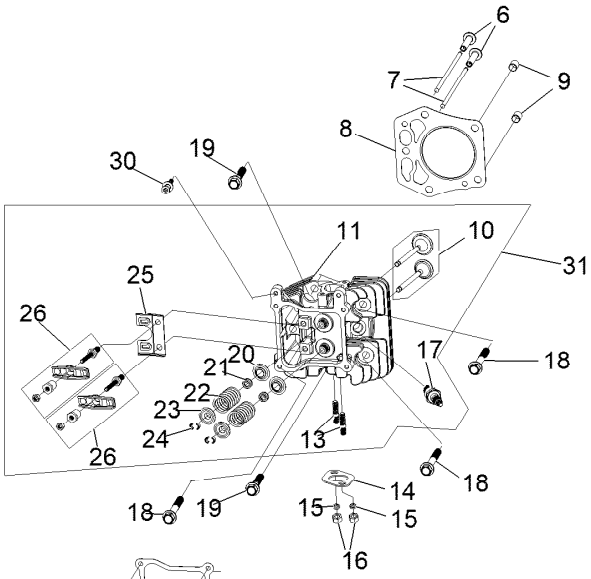

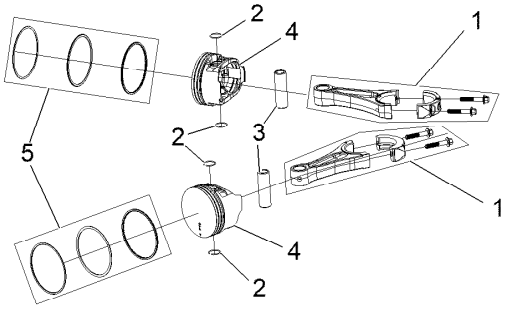

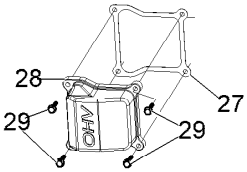

Piston and Cylinder Head Assembly (continued)

Ref.	Part Number	Qty.	Description
1	127-9256	2	Connecting Rod ASM
2	127-9258	4	Clip-Pin, Piston
3	127-9257	2	Pin-Piston
4	127-9259	2	Piston
5	127-9260	2	Piston Ring Set
6	127-9224	4	Lifter-Valve
7	127-9225	4	Rod-Push
8	127-9226	2	Gasket-Head, Cylinder
9	127-9227	4	Pin-Dowel
10	127-9228	2	Valve Set
11	133-9802	1	Head-Cylinder, Right
12	133-9804	1	Head-Cylinder, Left
13	121-0464	4	Stud-Exhaust
14	120-4317	2	Gasket-Exhaust
15	127-9279	4	Washer-Lock, Split
16	121-0199	4	Nut-HH
17	81-3250	2	Spark Plug
18	127-9231	6	Screw-HWH
19	127-9232	4	Screw-HWH
20	120-4303	4	Seat-Spring, Valve
21	120-4304	4	Seal-Stem, Valve
22	120-4305	4	Spring-Valve
23	120-4306	4	Retainer-Spring, Valve
24	120-4307	8	Keeper-Valve
25	127-9233	2	Plate-Guide, Push Rod
26	136-7881	4	Rocker Arm ASM
27	127-9295	2	Gasket-Valve Cover
28	127-9050	2	Cover-Valve
29	120-4225	8	Screw-HHF
30	120-4214	1	Screw-Shoulder, HH
31	136-7891	1	Complete Right Head ASM
32	136-7892	1	Complete Left Head ASM

Blower Housing Assembly

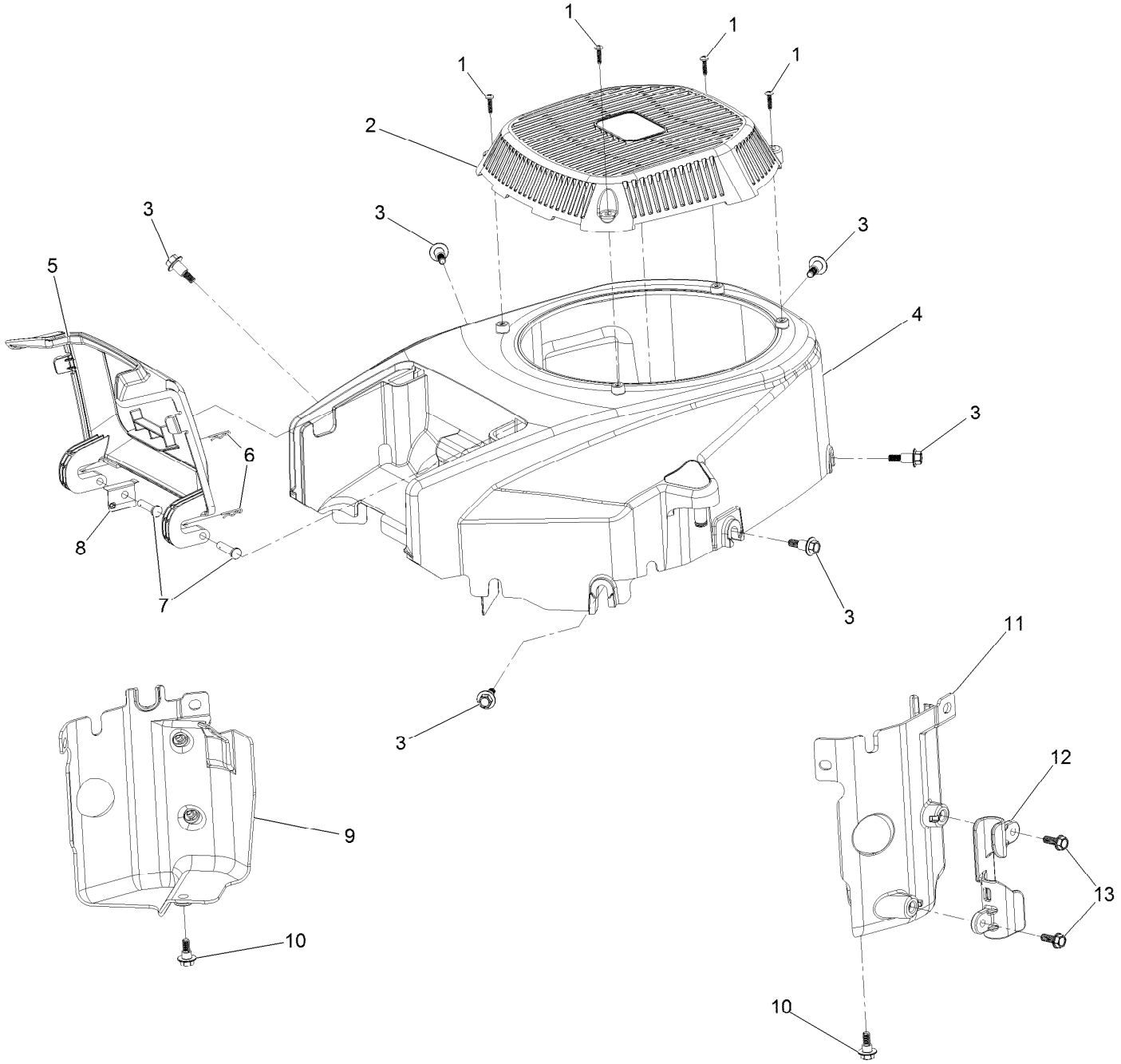

Blower Housing Assembly (continued)

Ref.	Part Number	Qty.	Description
1	133-1571	4	Screw-PPH, Plastic
2	127-9045	1	Cover-Fan
3	127-9196	6	Screw-Shoulder, HWH
4	133-1572	1	Shroud-Engine
5	127-9046	1	Door-Filter, Air
6	127-9280	2	Pin-Hair
7	127-9282	2	Pin
8	127-9281	1	Plate-Spring
9	136-7877	1	Baffle-Air, Left
10	120-4210	2	Screw-Shoulder, HHF
11	136-7878	1	Baffle-Air, Right
12	127-9287	1	Cleat-Hose
13	120-4232	2	Screw-HHF

Gasket and Seal Kit

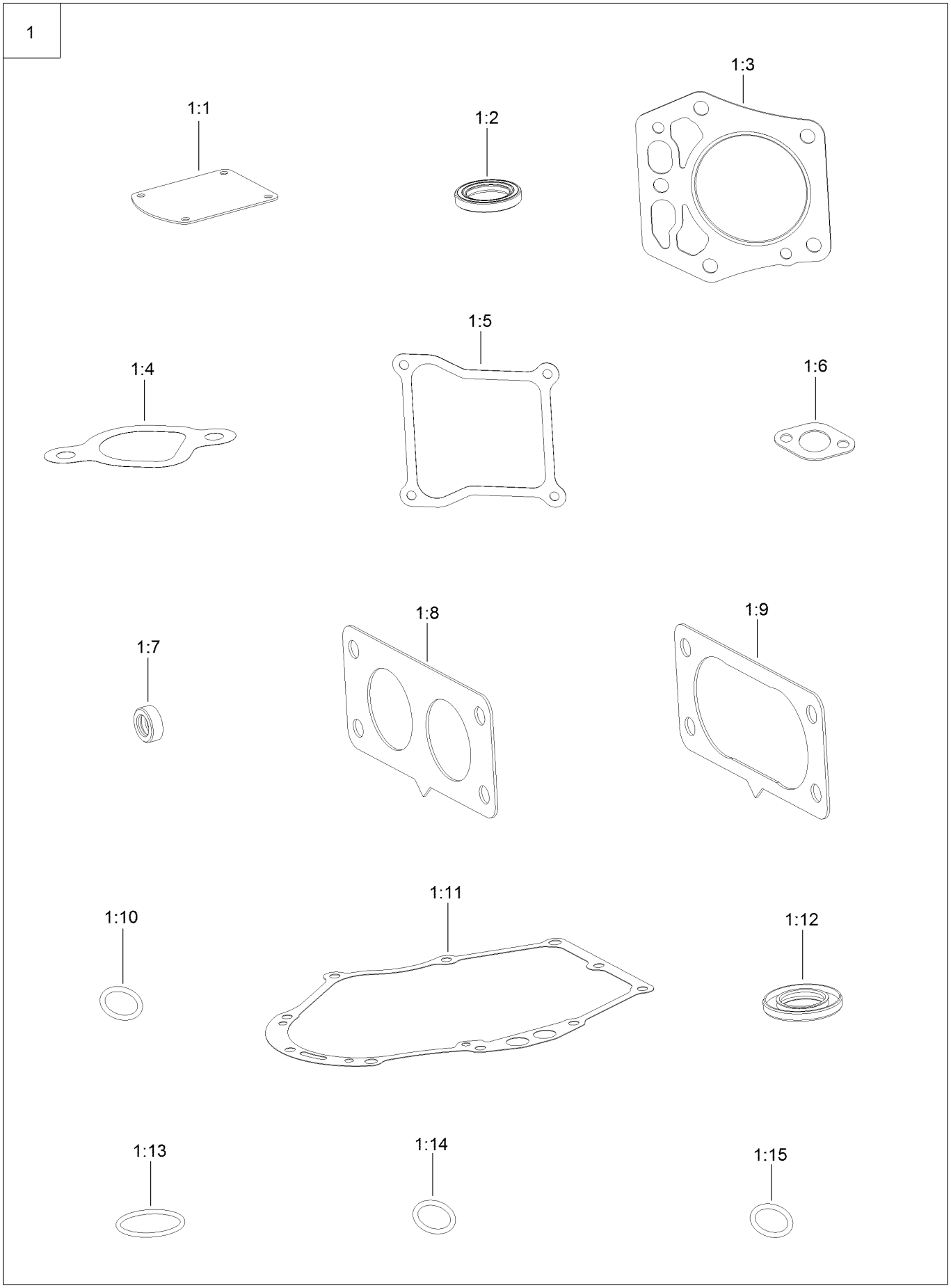

Gasket and Seal Kit (continued)

Ref.	Part Number	Qty.	Description
1	127-9296	1	Gasket And Seal Kit
1:1	127-9214	1	Gasket-Breather
1:2	120-4267	1	Seal-Oil
1:3	127-9226	2	Gasket-Head, Cylinder
1:4	127-9230	2	Gasket-Intake
1:5	127-9295	2	Gasket-Valve Cover
1:6	120-4317	2	Gasket-Exhaust
1:7	120-4257	1	Seal-Oil
1:8	127-9246	2	Gasket-Carburetor
1:9	127-9251	1	Gasket-Carburetor
1:10	120-4262	2	O-Ring
1:11	127-9267	1	Gasket-Cover, Crankcase
1:12	127-9271	1	Seal
1:13	127-9273	1	O-Ring
1:14	127-9284	1	O-Ring
1:15	127-9286	1	O-Ring

Body Styling and Fuel Pod Assembly

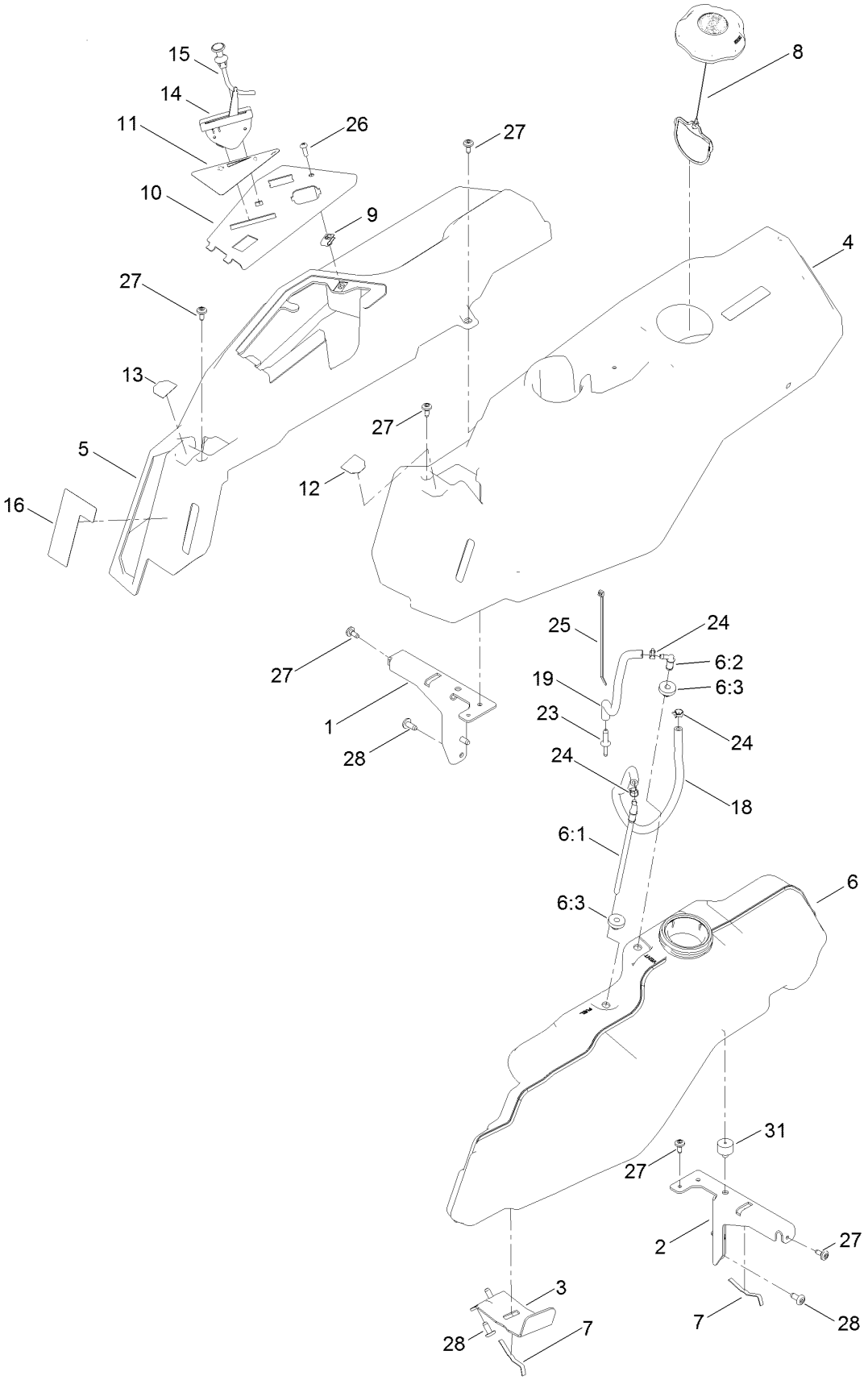

Body Styling and Fuel Pod Assembly (continued)

Ref.	Part Number	Qty.	Description
1	138-6070-03	1	Support-Pod, RH
2	138-6071-03	1	Support-Pod, LH
3	139-3271-03	1	Support-Tank, Fuel
4	138-6074	1	Pod-LH
5	138-6075	1	Pod-RH
6	138-6072	1	Fuel Tank ASM
6:1	139-1091	1	Connector-Elbow, 90 DEG
6:2	117-7400	1	Fitting-Plastic
6:3	46-6560	2	Bushing
7	609830	2	Spring
8	137-4119	1	Cap-Fuel, Ratcheting
9	107069	1	Clip
10	139-2380-05	1	Panel-Control
11	140-2717	1	Decal-Panel Control
12	139-2395	1	Decal-Control Lever, LH
13	139-2394	1	Decal-Control Lever, RH
14	139-2403	1	Cable-Throttle
15	139-2402	1	Cable-Choke
16	139-2388	1	Decal-Smart Speed
18	109-0298	1	Line-Fuel
19	110-3447	1	Hose-Fuel
23	117-5399	1	Adaptor-Orifice
24	2412-98	3	Clamp-Hose
25	614249	1	Tie-Cable
26	3258-166	1	Screw-PRH
27	120-7950	6	Screw-Torx
28	138-9753	6	Screw
31	120-7893	1	Bumper-Grommet

Electrical Assembly

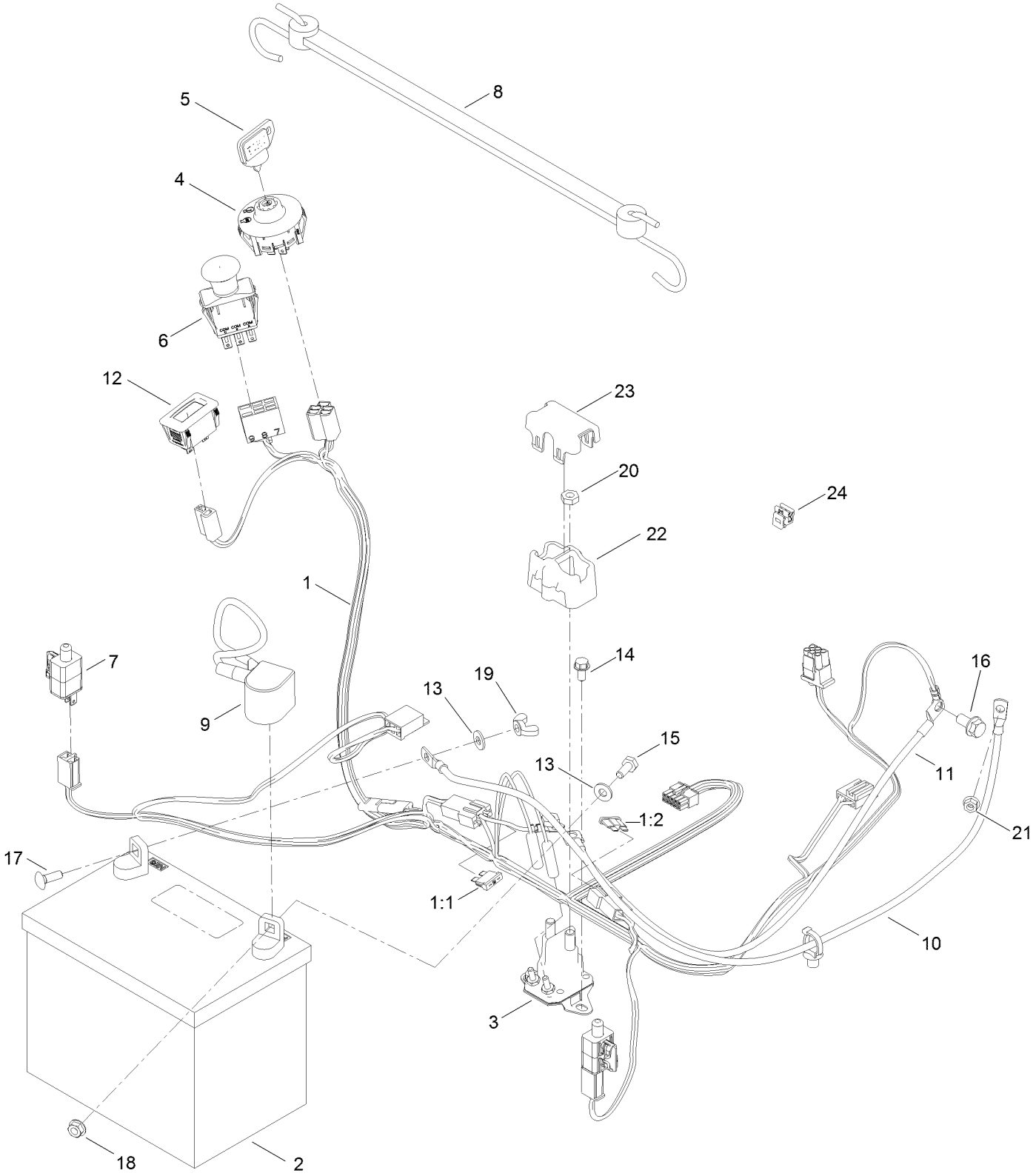

Electrical Assembly (continued)

Ref.	Part Number	Qty.	Description
1	138-2521	1	Harness-Wire
1:1	109355	1	Fuse-Blade, 15 Amp
1:2	109102	1	Fuse-Blade, 25 Amp
2	105-1692	1	Battery, 230CCA W/O Electrolyte
3	117-1197	1	Solenoid
4	137-4100	1	Switch-Ignition
5	63-8360	1	Key-Ignition
6	103-5221	1	Switch-PTO
7	110-6765	2	Switch
8	139-2381	1	Strap-Rubber
9	140-2713	1	Cable-Battery, Pos
10	139-2431	1	Cable-Battery, Red (8 Gauge)
11	110-6793	1	Cable-Battery, Black
12	120-2244	1	Hourmeter
13	3256-22	2	Washer-Flat
14	32144-4	2	Screw-HWH
15	321-3	1	Screw-HH
16	3234-14	1	Screw-HHF
17	3229-1	1	Screw-CARR
18	32128-33	1	Nut-HF
19	32103-22	1	Nut-Wing
20	3220-2	2	Nut-Jam
21	33003-00	1	Nut-HF
22	140-2080	1	Cover-Solenoid
23	140-2081	1	Cap-Solenoid
24	32180-418	1	Clip-Harness

60 Inch Deck and Decal Assembly

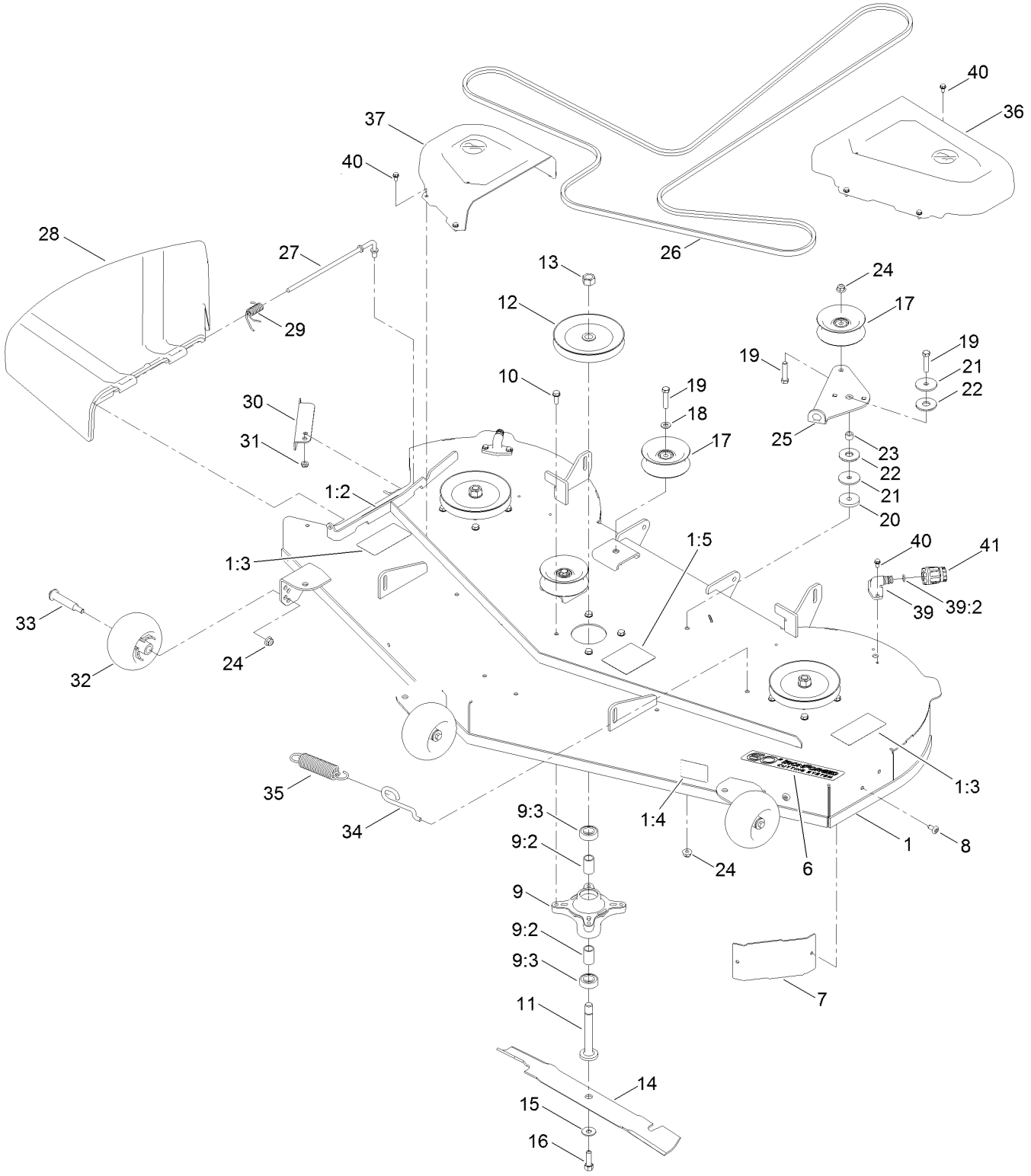

60 Inch Deck and Decal Assembly (continued)

Ref.	Part Number	Qty.	Description
1	138-9768	1	60In Deck And Decal ASM
1:2	93-7009	1	Decal-Danger
1:3	132-0872	2	Decal-Danger, Deck
1:4	112-9840	1	Decal-Scalp, Anti
1:5	99-3943	1	Decal-Routing, Belt
6	139-3209	1	Decal - Deck
7	139-2448-03	1	Baffle-Corner
8	138-9753	2	Screw
9	139-3214	3	Spindle ASM
9:2	120-7935	2	Spacer
9:3	138-9770	2	Bearing-Ball
10	32144-41	12	Screw-Taptite
11	117-7268	3	Shaft-Spindle
12	133-1199	3	Pulley
13	3219-6	3	Nut-Hex
14	115-9649-03	3	Blade-Hi Flow
15	3290-465	3	Washer-Belleville
16	26-0671	3	Screw-HH
17	132-9420	3	Pulley-Idler, Flat
18	3256-24	2	Washer-Flat
19	323-9	4	Screw-HH
20	110-9981	1	Washer-Plain
21	63-7400	2	Washer-Rebound
22	114-0463	2	Washer-Friction, Composite
23	115-4986	1	Spacer
24	104-8301	5	Nut-HF, NI
25	138-7262	1	Arm-Idler
26	109-3661	1	Belt
27	137-2019	1	Rod-Pivot
28	138-7502	1	Deflector-Discharge
29	138-7268	1	Spring-Torsion
30	138-9800-03	1	Baffle-Cutoff
31	3296-59	1	Nut-Lock, NI
32	1-603299	3	Roller-Scalp, Anti
33	112-3977	3	Bolt-Shoulder
34	138-7266	1	Spring-Return, Hook
35	138-7264	1	Spring-Extension
36	133-9282	1	Cover-Belt, LH
37	133-9283	1	Cover-Belt, RH
39	133-9289	2	Fitting-Washout
39:2	133-9290	1	O-Ring
40	32144-4	12	Screw-HWH
41	95-3270	1	Connector-Hose

Frame Decal Assembly

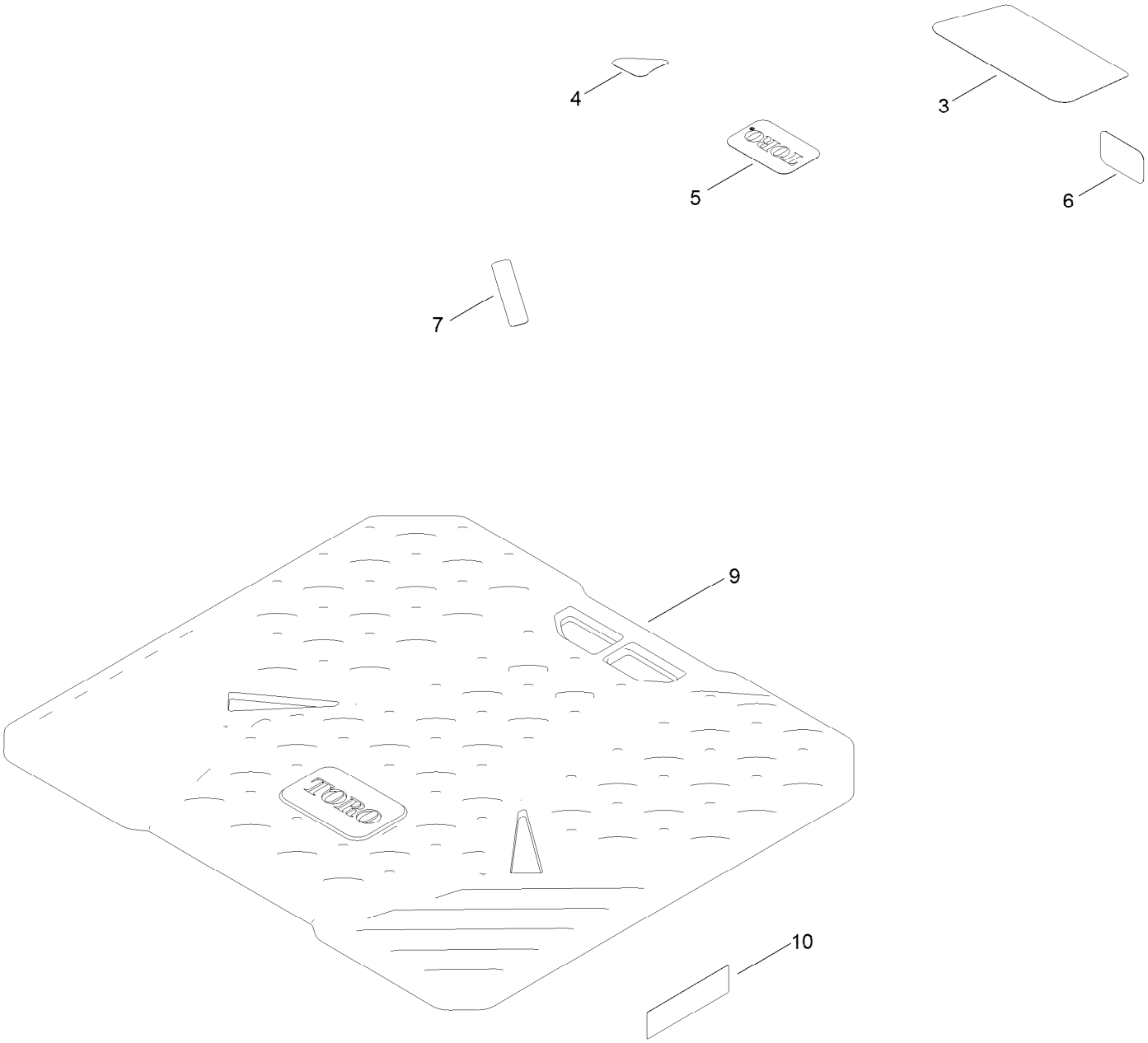

Frame Decal Assembly (continued)

Ref.	Part Number	Qty.	Description
3	136-5597	1	Decal-Engine
4	131-1097	1	Decal-Drain, Oil
5	131-4157	1	Decal
6	127-9076	1	Placard-Intake
7	132-0904	1	Decal-Shutdown
9	139-5899	1	Floor Mat
10	140-2099	1	Decal

Clutch Assembly

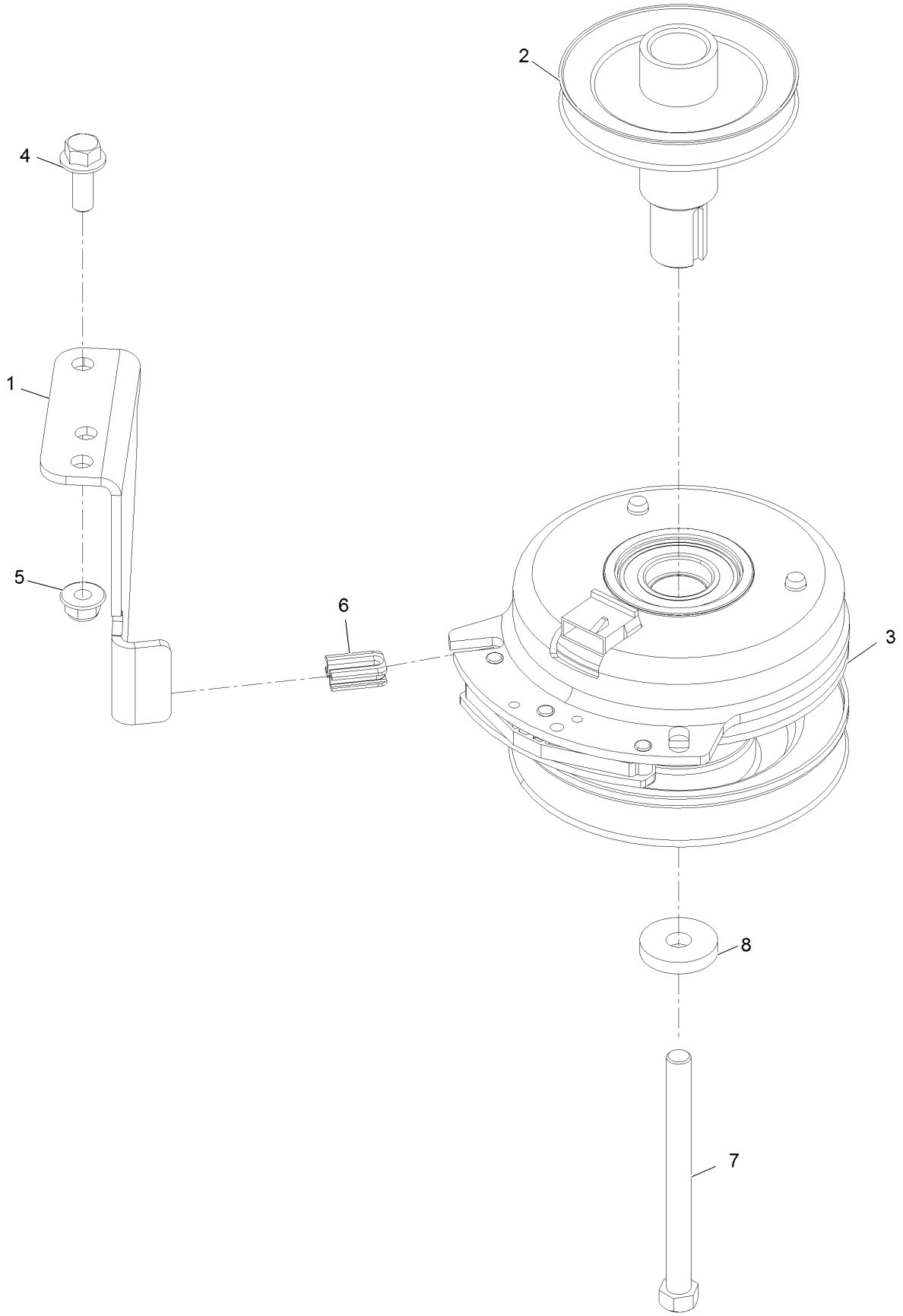

Clutch Assembly (continued)

Ref.	Part Number	Qty.	Description
1	137-7000	1	Stop-Clutch (Wide)
2	138-9792	1	Pulley-Engine
3	127-3410	1	Clutch-PTO
4	3234-42	1	Screw-HHF
5	104-8301	1	Nut-HF, NI
6	120-2217	1	Isolator-Clutch
7	3212-19	1	Screw-HH
8	112843	1	Washer

Attachments and Accessories

For 75760 TimeCutter 6000 Riding Mower

Product Name	Model/Part
Hypr-Oil 500 (quart)	114-4713
Blade-Hi Flow, 20.5in	115-9649-03P
Hourmeter Kit	116-5461
Seat Cover w/Arm Rest	117-0097
54/60 Inch Striping Kit	117-5319
Jack Kit	127-6666
Fuel Stabilizer .05 oz	130-2393
4-Cycle Fuel, Snow And Lawn 32oz Can	131-3823
Toro Premium Fuel Treatment 12 Oz Bottle	131-6572
Heavy Duty Air Cleaner Kit	135-6195
Maintenance Kit Toro V-twin Engine	139-0646
Maintenance Kit Toro	139-0649
60 Inch Recycler Kit	139-3290
Front Weight Kit	140-2050
Assist Bar Kit	140-2052
Sunshade Kit	140-2054
LED Light Kit	140-2056
Floormat Kit	140-2060
Jack Mount Kit	140-2711
60 Inch Bagging Enhancement Kit	140-3508
10w30 4-Cycle Engine Oil (32oz Bottle)	38280
Toro 4-Cycle SAE 30 Oil (32oz Bottle)	38903
Storage Cover	490-7516
Twin Bagger, Timecutter 60 Inch	79413
ROPS Kit	79485
Slope Sensor Kit	79486

Notes:

Notes:

Notes:

TORO®

Count on it.