Form No. 3425-435 Rev C

TORO®

Count on it.

Parts Catalog

TimeCutter® SS 4225

Riding Mower

Model No. 74726—Serial No. 402491338 and Up

Model No. 74726TA—Serial No. 400000000 and Up

Register at www.Toro.com.
Original Instructions (EN)

3425-435 C

Ordering Replacement Parts

To order replacement parts, please supply the part number, the quantity, and the description of each part desired.

Understanding Reference Numbers

Each identified part in an illustration has a reference number. The reference number for a part also appears in the parts list, along with other information about the part.

This catalog uses two special reference number formats, one to indicate parts in a service assembly and another to indicate the quantity of a given part in an illustration.

Service Assembly Reference Numbers

Parts in service assemblies have reference numbers in the form a:b. The a represents the reference number of the entire service assembly and the b represents a sequential number unique to each part within the service assembly.

For example, a wheel assembly might be identified by reference number 6, the tire by 6:1, the valve by 6:2, and the wheel by 6:3. When you order the assembly identified by reference number 6, you receive all parts identified by reference numbers 6:1,6:2, and 6:3. However, you may also order any part individually. Reference numbers of this type appear in illustration and in parts lists.

Reference Numbers Indicating Quantity

In an illustration, if a reference number indicates more than one part, the reference number has the form nX y. The n represents the quantity of the part, the X is the multiplication symbol, and the y represents the reference number.

For example, in an illustration, the reference number 2X 37 means that two of the parts identified by reference number 37 are indicated.

Contents

Frame Assembly 4
Deck Lift Assembly 6
Fork and Caster Wheel Assembly 8
Traction Drive Assembly 10
Left Hand Hydro Transaxle Assembly No. 119-3330 12
Right Hand Hydro Transaxle Assembly No. 119-3331 14
Brake Assembly 16
Tire Assembly No. 131-3671 18
Seat Assembly 20
Motion Control Assembly 22
Engine and Muffler Assembly 24
Fuel System Assembly 26
Carburetor Assembly 28
Air Intake and Filtration Assembly 30
Ignition and Cooling Fan 32
Crankcase and Crankshaft Assembly 34
Governor Control Assembly 36
Piston and Cylinder Head Assembly 38
Blower Housing Assembly 40
Gasket and Seal Kit 42
Body Styling and Fuel Tank Assembly 44
Battery and Electrical Assembly 46
42 Inch Deck Assembly 48
42 Inch Decal Assembly No. 137-7041 50
Model Specific Decal Assembly 52
Maintenance, HOC and Smart Speed Decal Assembly 54
Clutch Assembly 56
Attachments and Accessories 58

© 2022—The Toro® Company
8111 Lyndale Avenue South
Bloomington, MN 55420

Contact us at www.Toro.com.
Printed in the USA.
All Rights Reserved

Frame Assembly

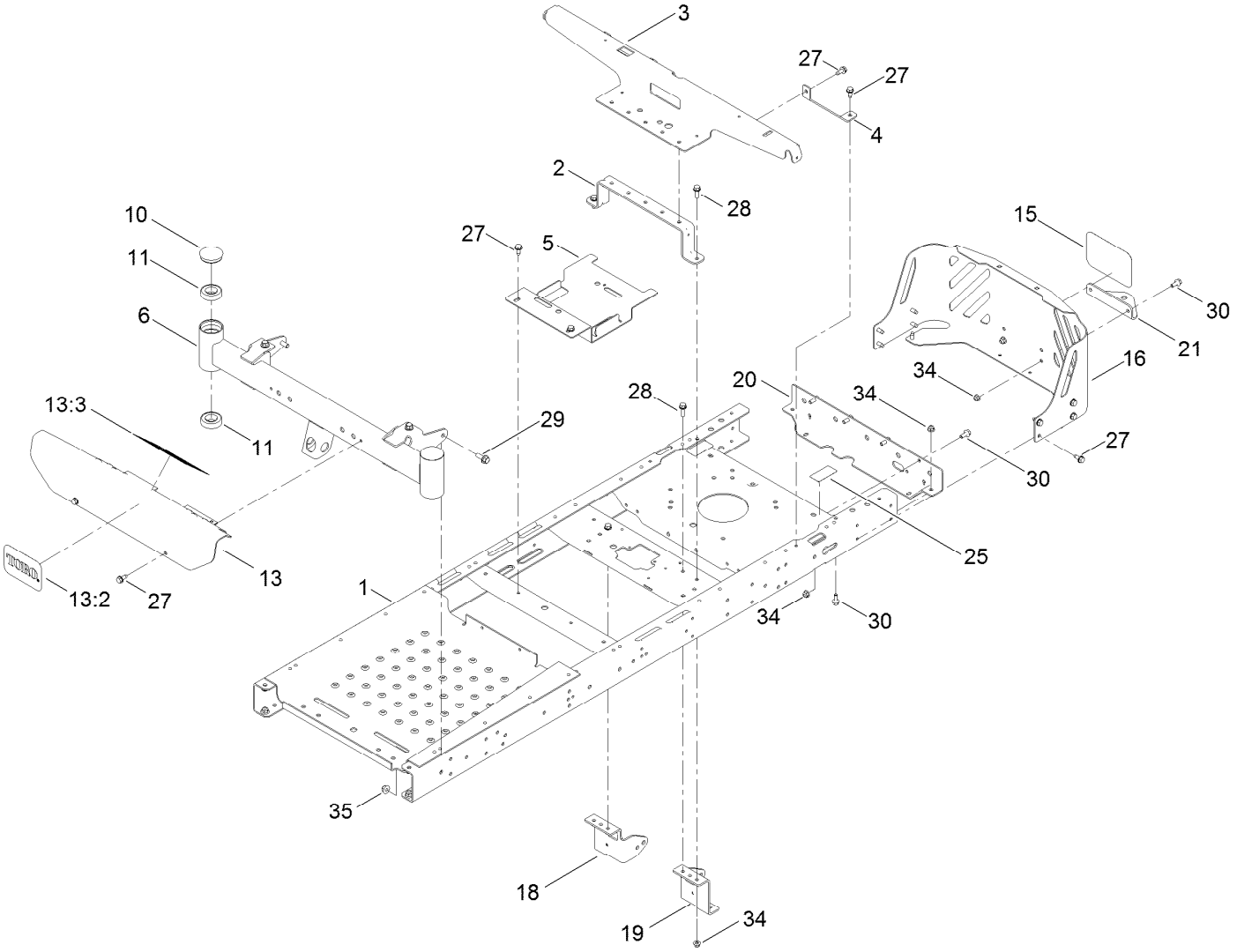

Frame Assembly (continued)

Ref.	Part Number	Qty.	Description
1	135-0509-01	1	Frame ASM
2	135-0686-03	1	Brace-Seat, Rear (Narrow)
3	131-1040-03	1	Support-Pod
4	119-3431-03	2	Support-Tank, Rear
5	135-0507-03	1	Bracket-Battery
6	125-1742-01	1	Axle-Front, Narrow
10	116-4348	2	Cap-Grease
11	109-3678	4	Bearing-Ball
13	132-0890	1	Footrest ASM
13:2	105-8278	1	Decal
13:3	132-0869	1	Decal-Danger
15	105-8278	1	Decal

Ref.	Part Number	Qty.	Description
16	127-3353-03	1	Guard-Engine, Narrow
18	137-7020-01	1	Mount-Hydro, Front (Right)
19	137-7021-01	1	Mount-Hydro, Front (Left)
20	130-6950-01	1	Crossmember-Rear, Narrow
21	117-1232-03	1	Bracket-Hitch
25	121-2989	2	Decal-Bypass
27	32144-70	18	Screw-HWHTF
28	3234-29	4	Screw-HHF
29	3234-42	6	Screw-HHF
30	3234-47	8	Screw-HHF
34	104-8300	12	Nut-HF, NI
35	104-8301	6	Nut-HF, NI

Deck Lift Assembly

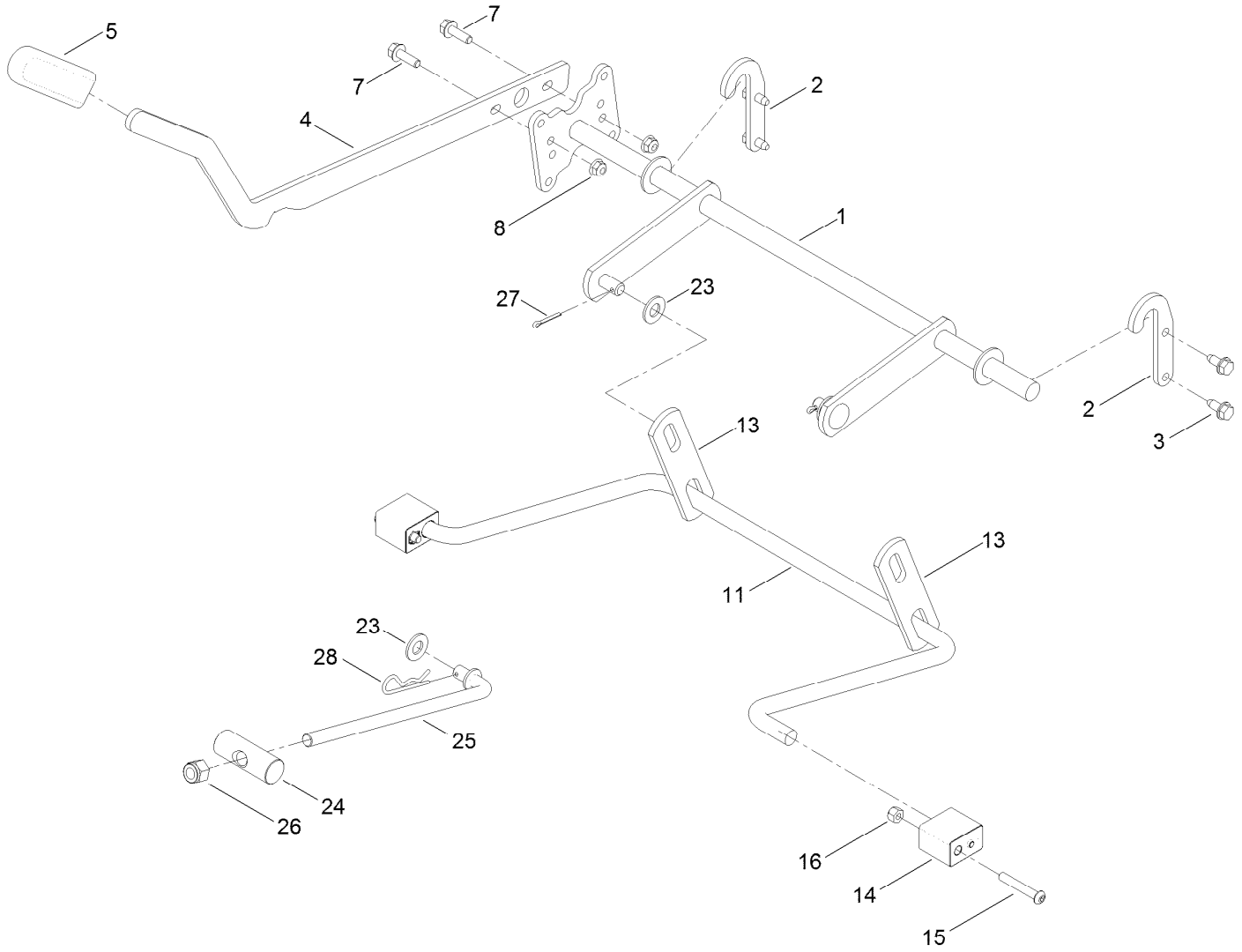

Deck Lift Assembly (continued)

Ref.	Part Number	Qty.	Description
1	132-6872-03	1	Lift-Deck, Narrow
2	119-8875	2	Bracket-Lift
3	32144-70	4	Screw-HWHTF
4	119-3427-03	1	Lever-Lift
5	1-633268	1	Grip-Lever
7	3234-29	2	Screw-HHF
8	104-8300	2	Nut-HF, NI
11	108-7839	1	Arm-Lift, Rear
13	108-7840	2	Link-Lift
14	108-7845	2	Block-Pivot
15	120-5499	2	Screw-HSBH
16	3296-29	2	Nut-Lock, NI
23	3256-26	3	Washer-Flat
24	119-8810	1	Pin-Pivot
25	133-4319	1	Rod-Mount, Deck
26	3296-19	1	Nut-Hex
27	3272-11	2	Pin-Cotter
28	1-806005	1	Pin-Cotter

Fork and Caster Wheel Assembly

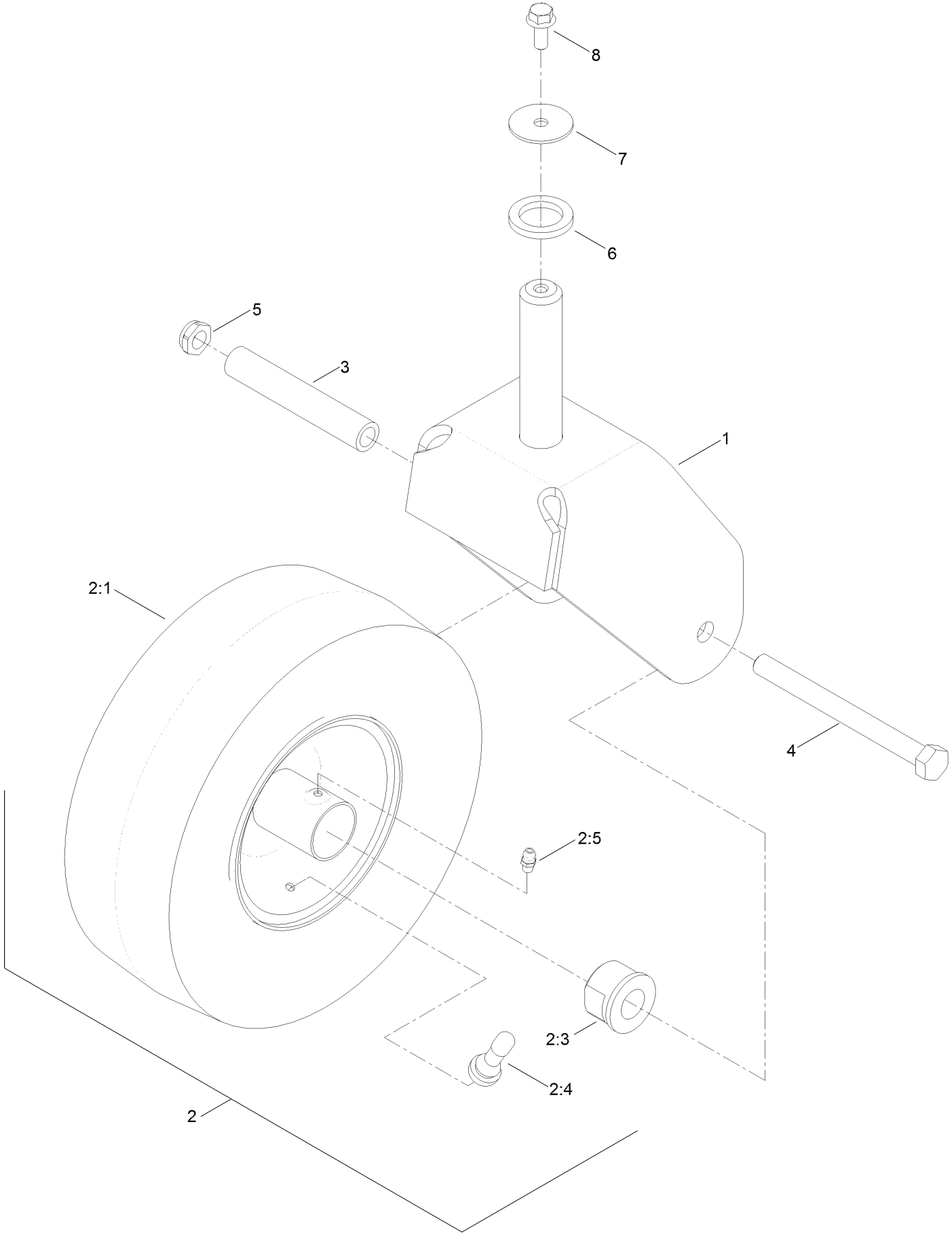

Fork and Caster Wheel Assembly (continued)

Ref.	Part Number	Qty.	Description
1	120-2266-01	2	Fork-Caster
2	130-0736	2	Caster Wheel ASM
2:1	130-0735	1	Tire
2:3	114-1640	2	Bushing-Flange
2:4	232-27	1	Stem-Valve
2:5	302-5	1	Fitting-Grease
2:6	105-0844	1	Tube-Inner ■ ●

Ref.	Part Number	Qty.	Description
3	104-3667	2	Bushing-Spanner
4	325-22	2	Screw-HH
5	3296-45	2	Nut-Hex
6	117-7394	2	Washer-Thrust
7	3256-68	2	Washer-Flat
8	3234-47	2	Screw-HHF

● Not illustrated

■ Optional Equipment

Traction Drive Assembly

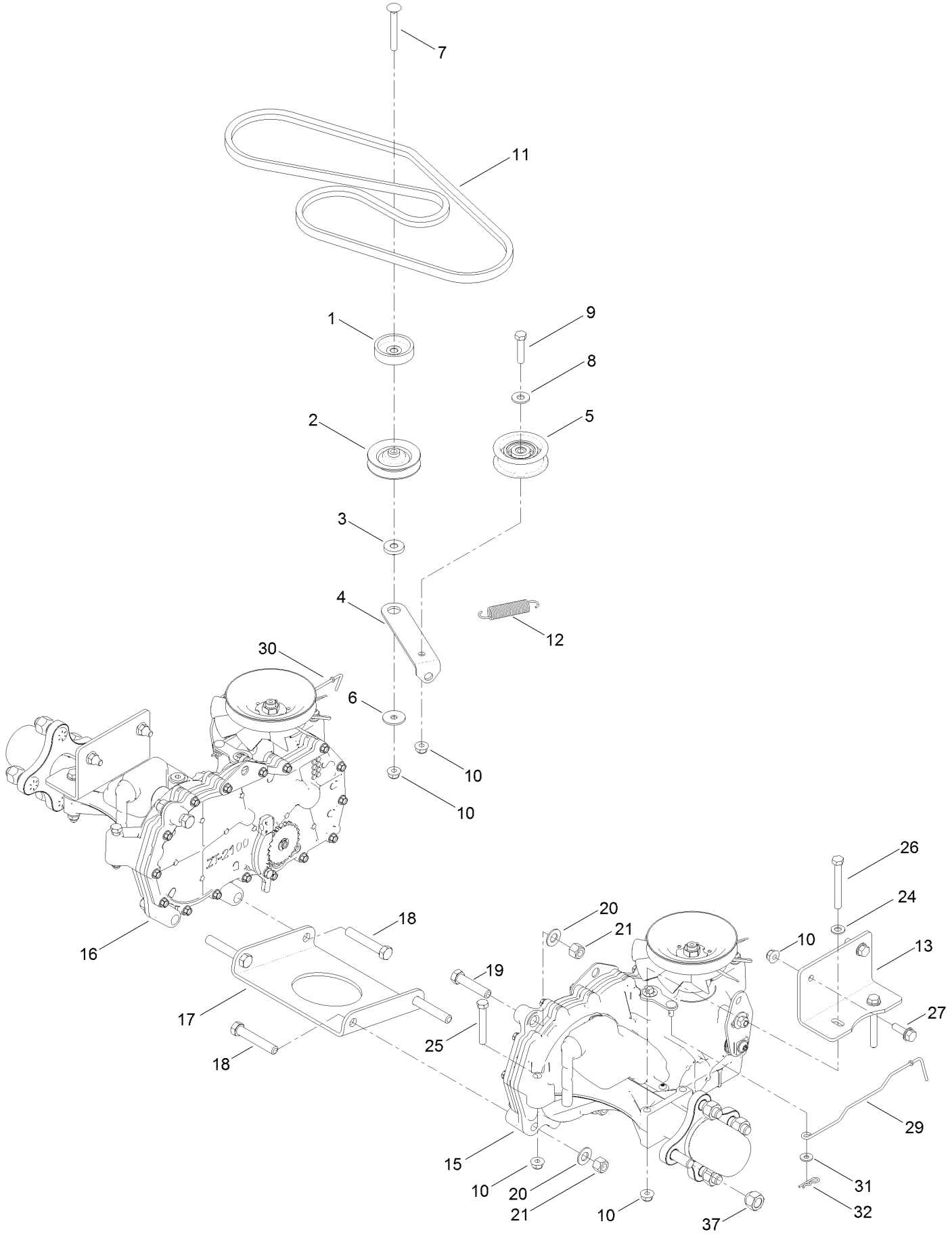

Traction Drive Assembly (continued)

Ref.	Part Number	Qty.	Description
1	119-3353	1	Spacer
2	119-8822	1	Pulley-Idler
3	119-3327	1	Spacer-Arm, Idler
4	119-3326	1	Arm-Idler
5	106-2176	1	Pulley-Idler
6	5-4460	1	Washer-Pivot
7	3230-8	1	Screw-CARR
8	3256-3	1	Washer-Flat
9	322-7	1	Screw-HH
10	104-8300	14	Nut-HF, NI
11	130-6975	1	V-Belt
12	104-6415	1	Spring-Return, Pedal
13	117-7264-03	2	Mount-Hydro
15	119-3330	1	LH Hydro Transaxle ASM
16	119-3331	1	RH Hydro Transaxle ASM

Ref.	Part Number	Qty.	Description
17	119-3339-03	1	Plate-Cross, Hydro
18	324-10	4	Screw-HH
19	324-8	2	Screw-HH
20	3256-25	6	Washer-Flat
21	3296-48	6	Nut-Hex
24	3256-23	6	Washer-Plain
25	322-11	4	Screw-HH
26	322-13	4	Screw-HH
27	3234-29	4	Screw-HHF
29	131-0900	1	*obs* Rod-Bypass, LH
30	130-7049	1	Rod-Bypass, RH
31	119-8952	2	Washer
32	3290-307	2	Pin-Cotter
37	242-50	8	Nut-Lug

Left Hand Hydro Transaxle Assembly No. 119-3330

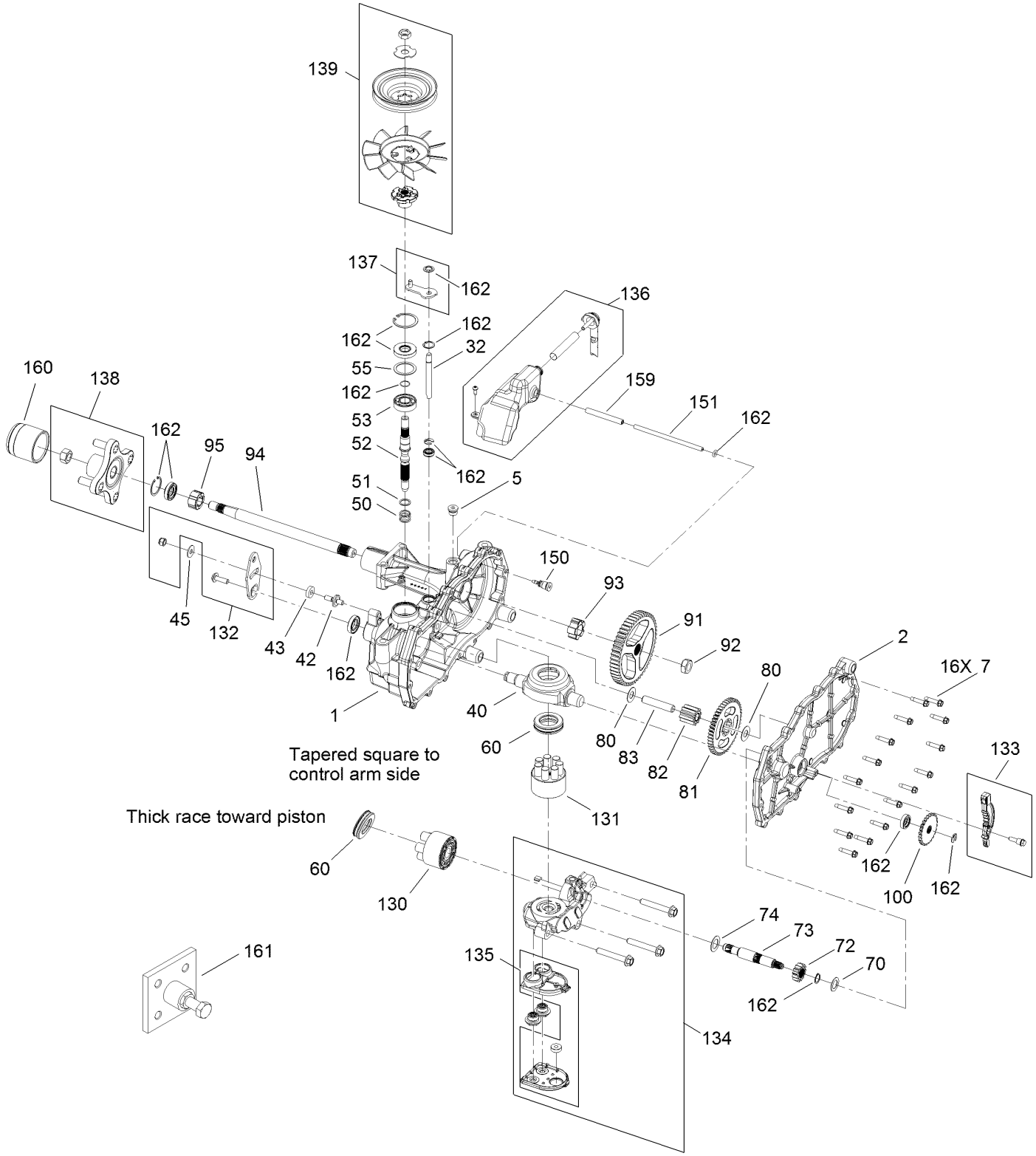

Left Hand Hydro Transaxle Assembly No. 119-3330 (continued)

Ref.	Part Number	Qty.	Description
1	120-5532	1	Main Housing ASM
2	120-5534	1	Housing Side Kit
5	104-2189	1	Plug-Thread, Straight
7	117-5359	16	Screw-HHF
13	104-2147	1	Sealant ●
32	106-8678	2	Rod-Bypass
40	104-5304	1	Swashplate-Trunnion
42	104-2116	1	Stud
43	112-9853	1	Puck-Friction
45	114-8491	1	Washer
50	120-5537	1	*obs*spring-Compression
51	120-5538	1	Washer
52	104-5306	1	Shaft-Input
53	104-5311	1	Bearing-Ball
55	104-5308	1	Spacer
60	94-6922	1	Bearing-Thrust
70	104-5339	1	Washer-Flat
72	104-5316	1	Gear-Pinnion, 13T
73	106-8683	1	Shaft-Motor
74	104-5360	1	Washer
80	119-5541	2	Washer
81	104-5317	1	Gear-10T/48T
82	104-5318	1	Gear-Jackshaft, 10T
83	104-5329	1	Pin-Jackshaft
91	120-5539	1	Gear-Bull
92	104-2142	1	Nut-HJ
93	115-8314	1	Bushing-Inboard
94	120-5540	1	Shaft-Axle
95	120-5541	1	Bearing-Sleeve
100	106-8694	1	Disc-Brake, Cog
130	103-2666	1	Cylinder Block Kit
131	110-8561	1	Pump Block ASM
132	117-5362	1	Control Arm Kit
133	106-8688	1	Brake Arm Kit
134	112-9861	1	Center Section Filter Kit
135	114-1634	1	Filter Kit
136	121-5730	1	RH Expansion Tank Kit
137	120-5549	1	Bypass Kit
138	121-5731	1	Hub Kit
139	121-5729	1	Fan Pulley Kit
150	104-5349	1	Fitting-SAE
151	115-8302	1	Hose
159	121-5728	1	Case-Tube
160	125-0041	1	Cap-Axle
161	114-8467	1	Puller-Hub, 4 Bolt
162	120-7103	1	Seal And Ring Kit

● Not illustrated

Right Hand Hydro Transaxle Assembly No. 119-3331

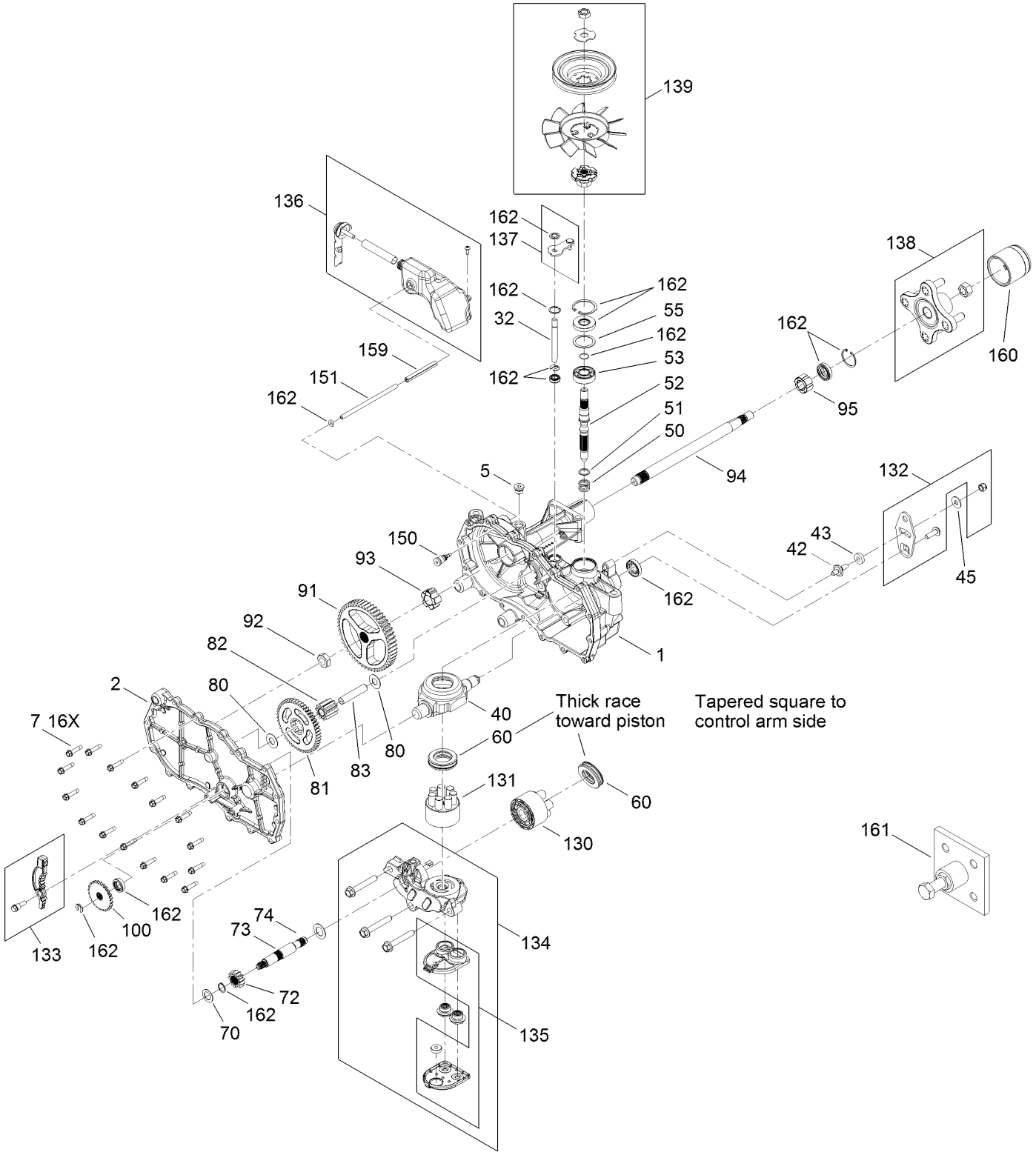

Right Hand Hydro Transaxle Assembly No. 119-3331 (continued)

Ref.	Part Number	Qty.	Description
1	120-5531	1	Main Housing ASM
2	120-5533	1	Housing Side Kit
5	104-2189	1	Plug-Thread, Straight
7	117-5359	16	Screw-HHF
13	104-2147	1	Sealant ●
32	106-8678	2	Rod-Bypass
40	104-5304	1	Swashplate-Trunnion
42	104-2116	1	Stud
43	112-9853	1	Puck-Friction
45	114-8491	1	Washer
50	120-5537	1	*obs*spring-Compression
51	120-5538	1	Washer
52	104-5306	1	Shaft-Input
53	104-5311	1	Bearing-Ball
55	104-5308	1	Spacer
60	94-6922	1	Bearing-Thrust
70	104-5339	1	Washer-Flat
72	104-5316	1	Gear-Pinnion, 13T
73	106-8683	1	Shaft-Motor
74	104-5360	1	Washer
80	119-5541	2	Washer
81	104-5317	1	Gear-10T/48T
82	104-5318	1	Gear-Jackshaft, 10T
83	104-5329	1	Pin-Jackshaft
91	120-5539	1	Gear-Bull
92	104-2142	1	Nut-HJ
93	115-8314	1	Bushing-Inboard
94	120-5540	1	Shaft-Axle
95	120-5541	1	Bearing-Sleeve
100	106-8694	1	Disc-Brake, Cog
130	103-2666	1	Cylinder Block Kit
131	110-8561	1	Pump Block ASM
132	117-5362	1	Control Arm Kit
133	106-8688	1	Brake Arm Kit
134	112-9862	1	Center Section Filter Kit
135	114-1634	1	Filter Kit
136	121-5735	1	LH Expansion Tank Kit
137	107-2489	1	Bypass Arm Kit
138	121-5731	1	Hub Kit
139	121-5729	1	Fan Pulley Kit
150	104-5349	1	Fitting-SAE
151	115-8302	1	Hose
159	121-5728	1	Case-Tube
160	125-0041	1	Cap-Axle
161	114-8467	1	Puller-Hub, 4 Bolt
162	120-7103	1	Seal And Ring Kit

● Not illustrated

Brake Assembly

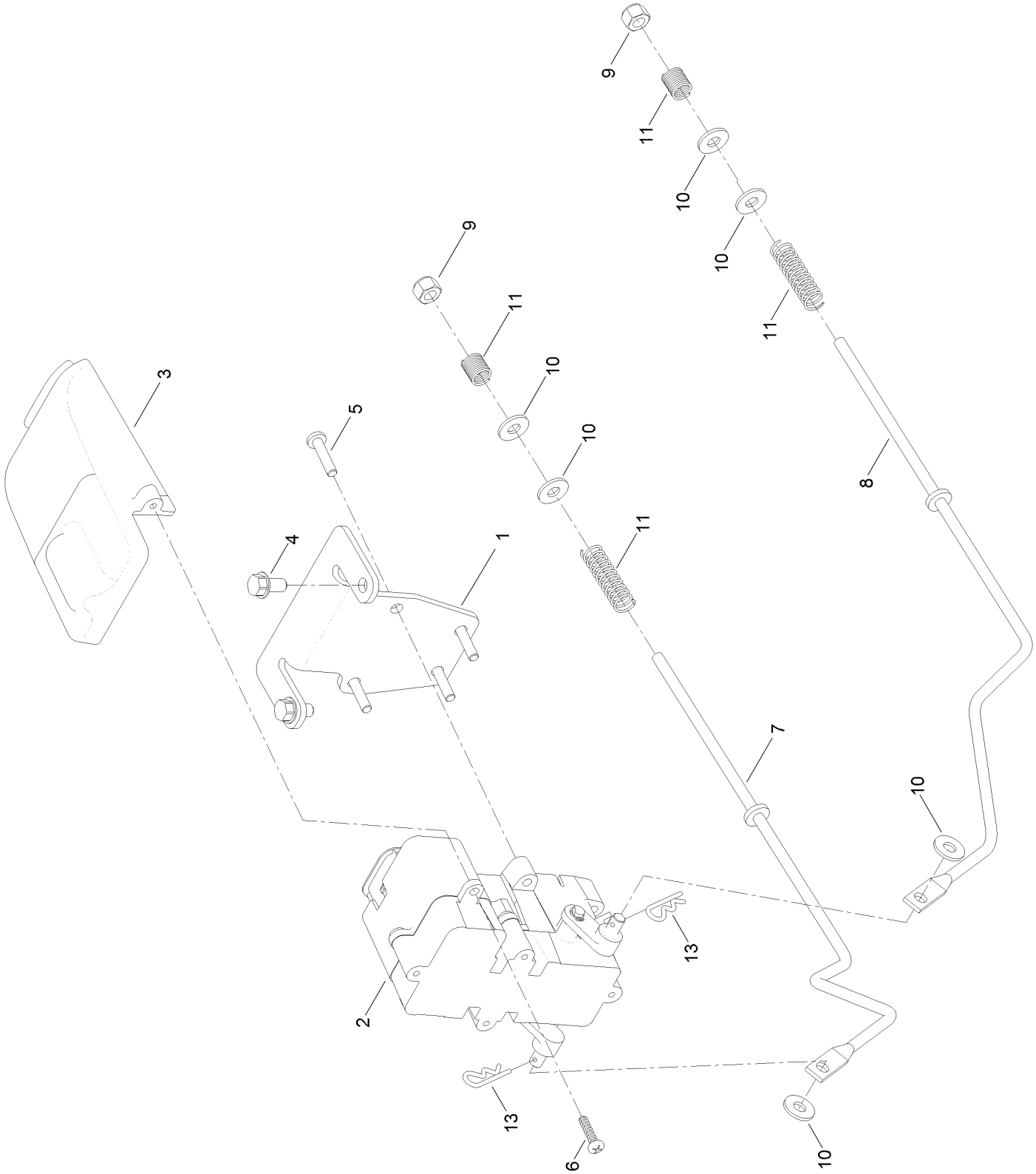

Brake Assembly (continued)

Ref.	Part Number	Qty.	Description
1	130-0790-03	1	Bracket-Mount, Brake
2	136-4213	1	Brake Box ASM
3	132-6949	1	Cover-Connector
4	32144-4	2	Screw-HWH
5	32144-36	4	Screw-PPH
6	94-4496	2	Screw-PPH
7	121-2974	1	Rod-Brake, RH
8	121-2975	1	Rod-Brake, LH
9	3296-42	2	Nut-Lock, NI
10	119-8952	6	Washer
11	117-1169	4	Spring-Compression
13	3290-307	2	Pin-Cotter

Tire Assembly No. 131-3671

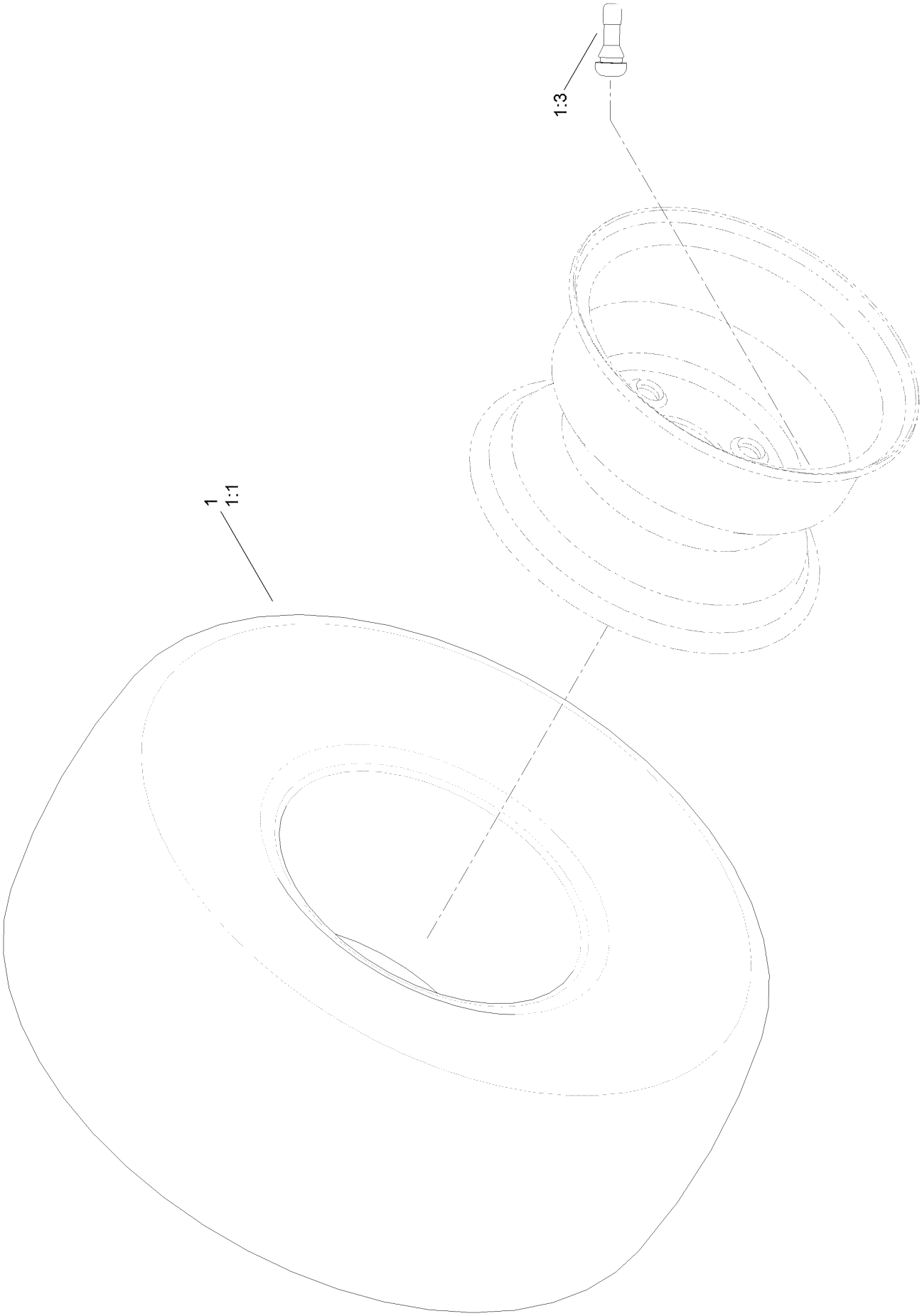

Tire Assembly No. 131-3671 (continued)

Ref.	Part Number	Qty.	Description
1	131-3671	2	2 Ply Wheel And Tire ASM
1:1	131-3678	1	Tire-2 Ply
1:3	232-27	1	Stem-Valve
1:99	107-2491	1	Tube-Tire ●

● Not illustrated

Seat Assembly

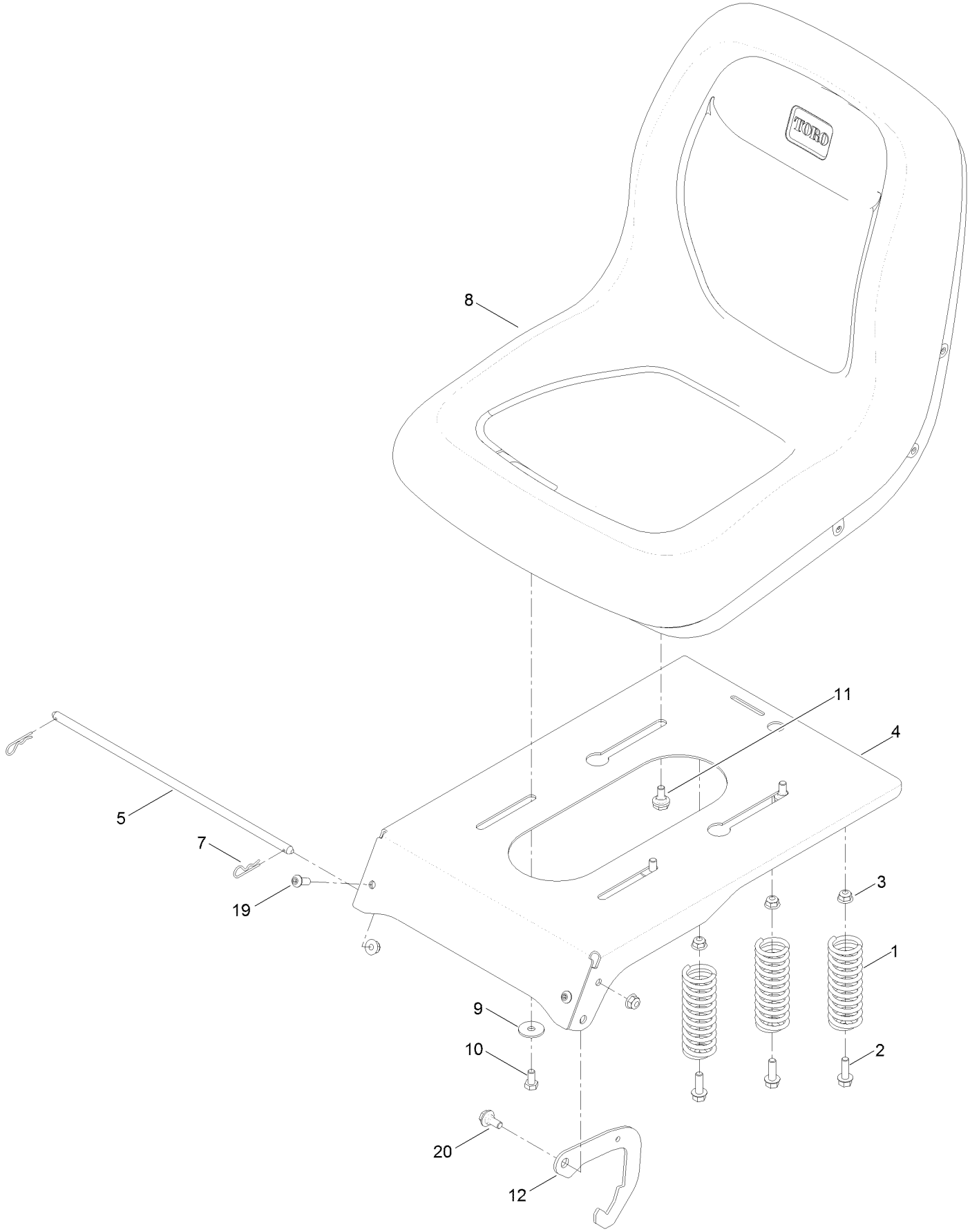

Seat Assembly (continued)

Ref.	Part Number	Qty.	Description
1	92-7054	3	Spring-Compression
2	3234-29	3	Screw-HHF
3	104-8300	5	Nut-HF, NI
4	131-4037-01	1	Pan-Seat
5	119-3433	1	Rod-Pivot, Narrow
7	3290-250	2	Pin-Cotter
8	119-8829	1	Seat-18 Inch
9	5-4460	2	Washer-Pivot
10	322-2	2	Screw-HH
11	37-8771	2	Bolt-Shoulder, HF
12	132-9353	1	Latch-Seat
19	3274-55	2	Screw-HSBH
20	19-1470	1	Screw-Shoulder

Motion Control Assembly

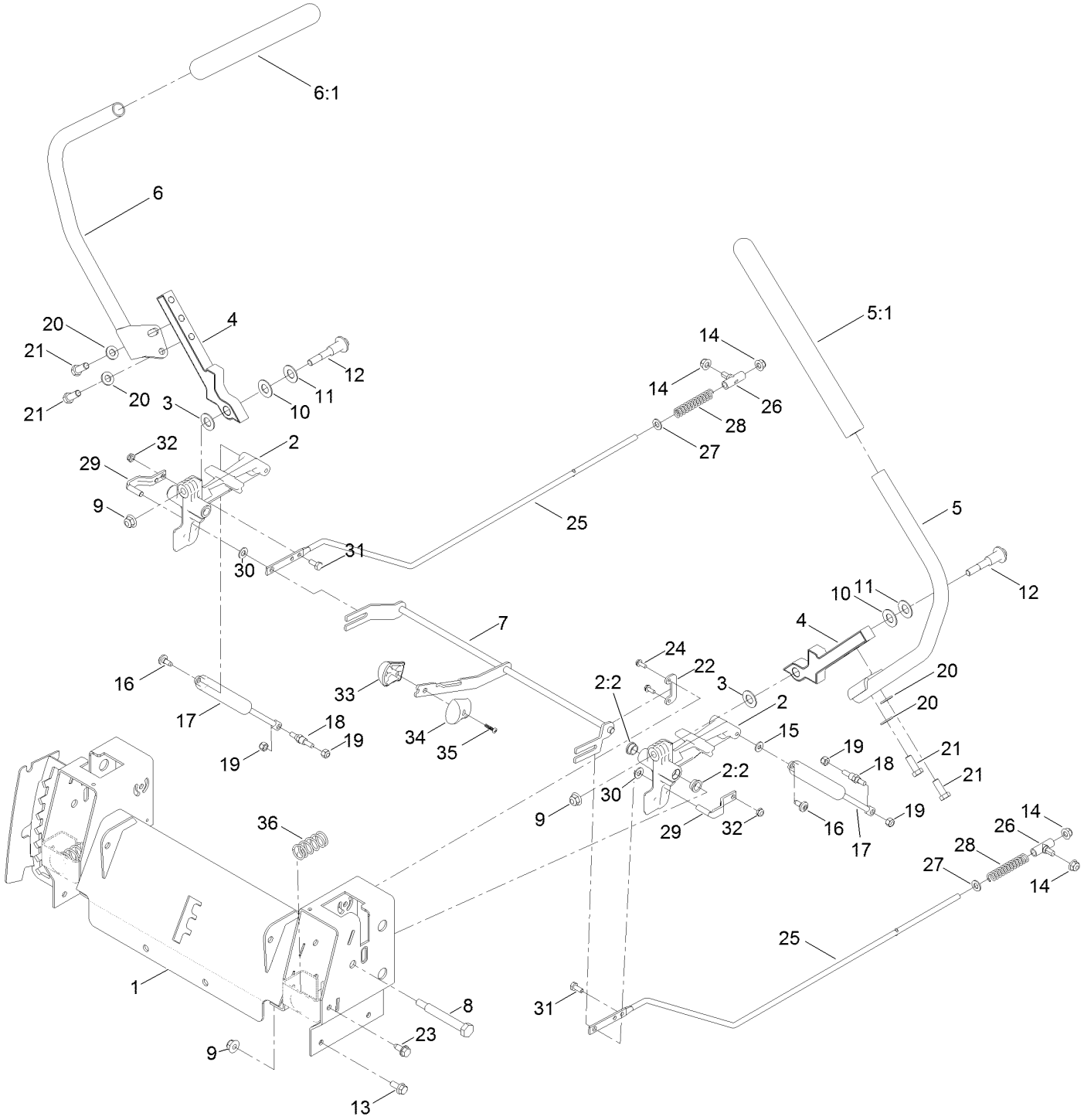

Motion Control Assembly (continued)

Ref.	Part Number	Qty.	Description
1	136-4156-03	1	Control Box ASM
2	119-3470	2	Actuator Arm ASM
2:2	256-156	2	Bushing-Flange
3	120-2273	2	Washer-Nylon
4	133-9299-05	2	Arm-Control
5	133-7055	1	Handle-Control, LH
5:1	121-0726	1	Grip
6	133-7057	1	Handle-Control, RH
6:1	121-0726	1	Grip
7	133-9300	1	Speed Control ASM
8	115-5099	2	Bolt-Pivot
9	104-8301	4	Nut-HF, NI
10	117-1240	2	Washer
11	119-8925	2	Washer-Belleville
12	117-1198	2	Bolt-Pivot
13	3234-47	6	Screw-HHF
14	104-8300	10	Nut-HF, NI
15	119-8952	2	Washer
16	120-7950	2	Screw-Torx
17	131-4132	2	Damper
18	110-6810	2	Stud-Damper
19	3296-42	4	Nut-Lock, NI
20	3256-24	4	Washer-Flat
21	323-6	4	Screw-HH
22	117-5385	2	Retainer
23	32144-70	4	Screw-HWHTF
24	32144-1	4	Screw-Taptite
25	117-5388	2	Rod-Hydro
26	119-8842	2	Mount-Rod, Hydro
27	3256-23	2	Washer-Plain
28	1-603807	2	Spring-Return, Neutral
29	121-1753	2	Pin-Rod, Hydro
30	93-6079	2	Spacer-Nylon
31	321-3	2	Screw-HH
32	3296-56	2	Nut-Lock, NI
33	132-9368	1	Knob-RH
34	132-9369	1	Knob-LH
35	94-4496	1	Screw-PPH
36	119-8876	2	Spring-Return

Engine and Muffler Assembly

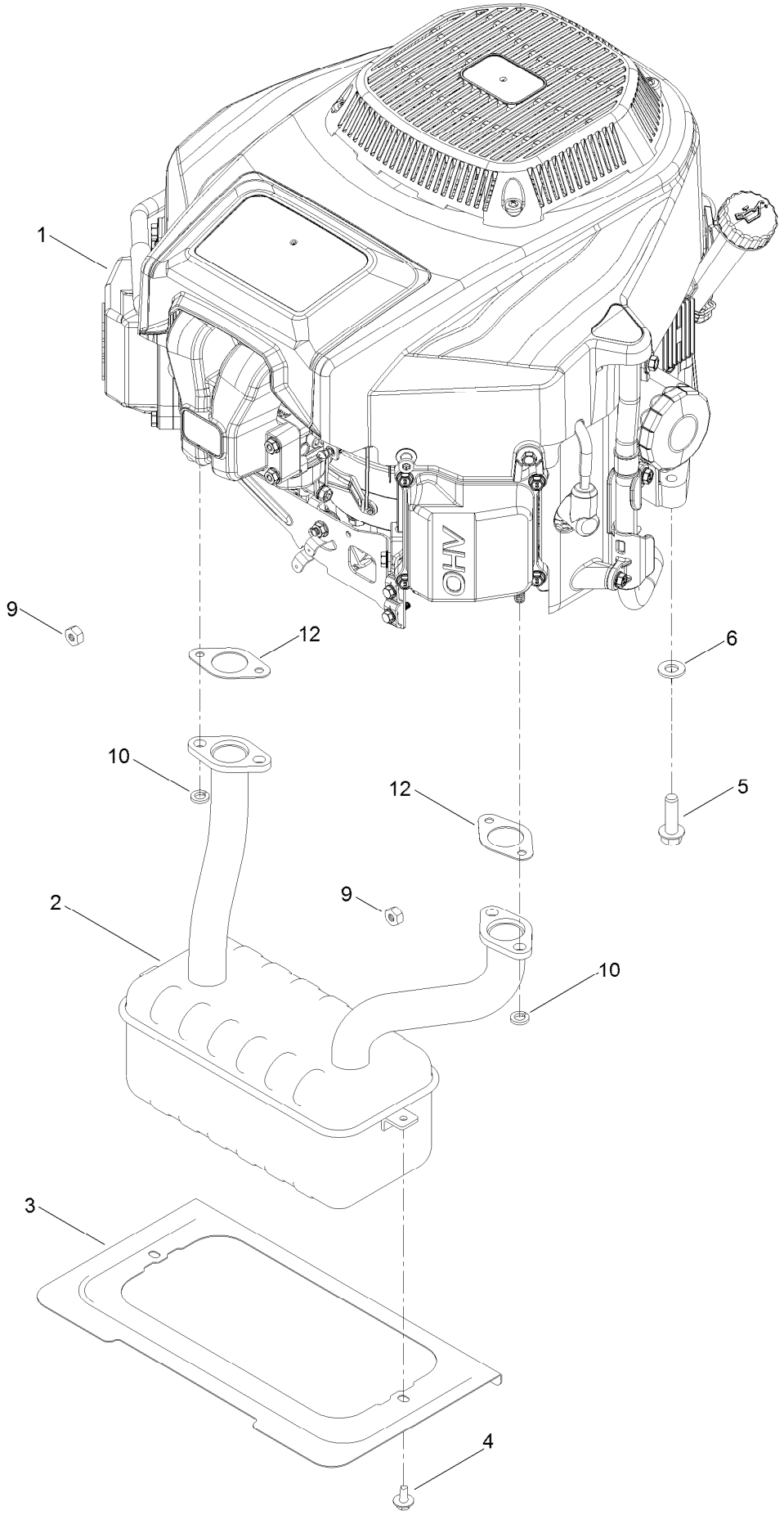

Engine and Muffler Assembly (continued)

Ref.	Part Number	Qty.	Description
1	139-0603	1	Engine-2P77F
2	130-6851	1	Muffler
3	131-1071-03	1	Shield-Heat
4	46-8560	2	Screw-HHFTF
5	32144-109	4	Screw-Thd
6	3256-24	3	Washer-Flat
9	121-0199	4	Nut-HH
10	127-9279	4	Washer-Lock, Split
12	120-4317	2	Gasket-Exhaust

Fuel System Assembly

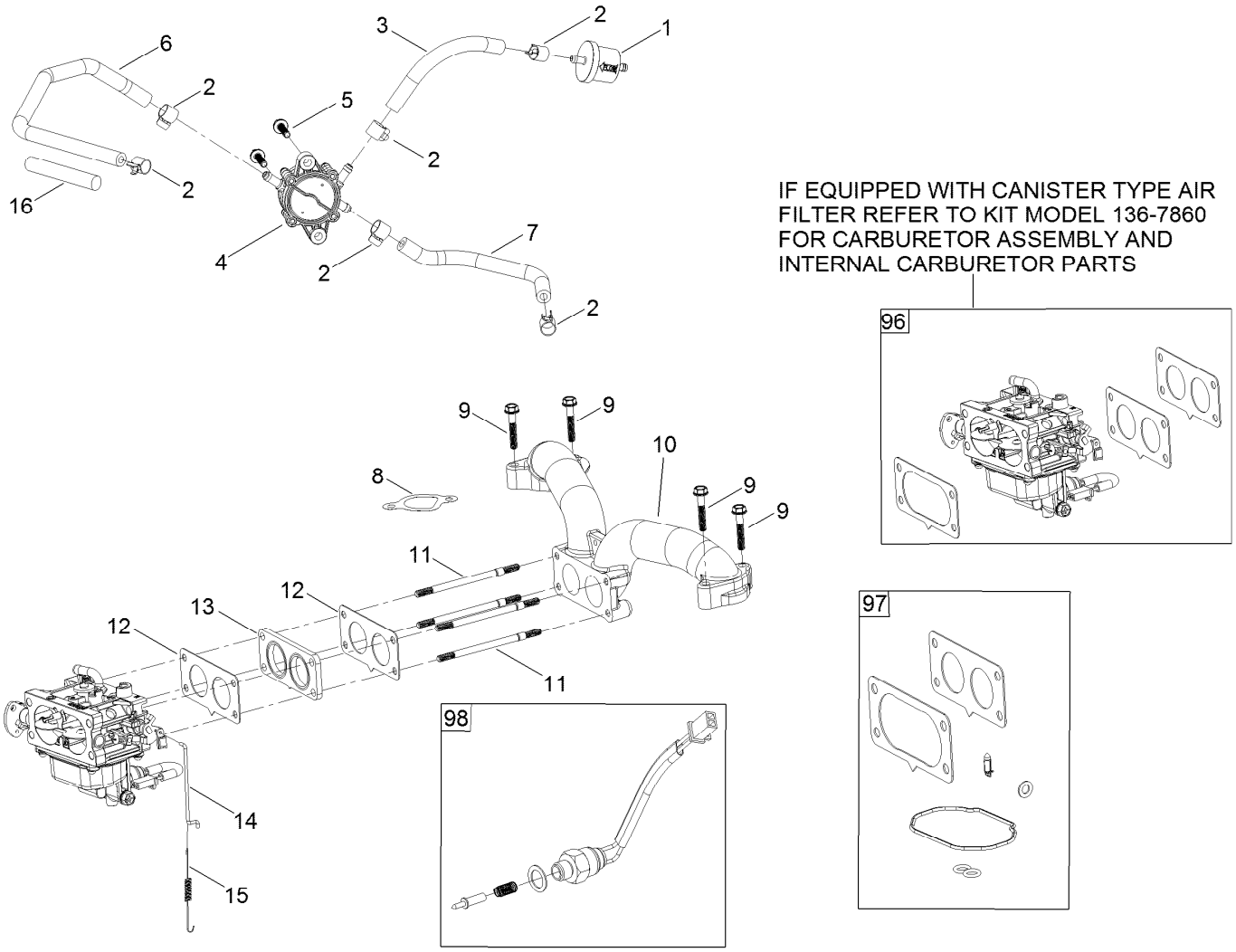

Fuel System Assembly (continued)

Ref.	Part Number	Qty.	Description
1	133-1563	1	Filter-Fuel
2	120-4251	6	Clamp-Fuel Line
3	120-4371	1	Line-Fuel
4	127-9206	1	Pump-Fuel
5	120-4225	2	Screw-HHF
6	127-9205	1	Hose-Fuel
7	127-9207	1	Hose-Fuel
8	127-9230	2	Gasket-Intake
9	120-4284	4	Screw-HHF
10	127-9244	1	Manifold-Intake
11	127-9245	4	Stud
12	127-9246	2	Gasket-Carburetor
13	127-9247	1	Insulator-Carburetor
14	133-9963	1	Linkage-Throttle
15	133-9964	1	Spring-Return, Throttle
16	127-9355	1	Sleeve-Fuel Line Protector
96	133-9966	1	Carburetor Replacement Kit
97	127-9290	1	Carburetor Repair Kit
98	127-9292	1	Solenoid Kit
99	133-9968	1	High Altitude Kit ●

● Not illustrated

Carburetor Assembly

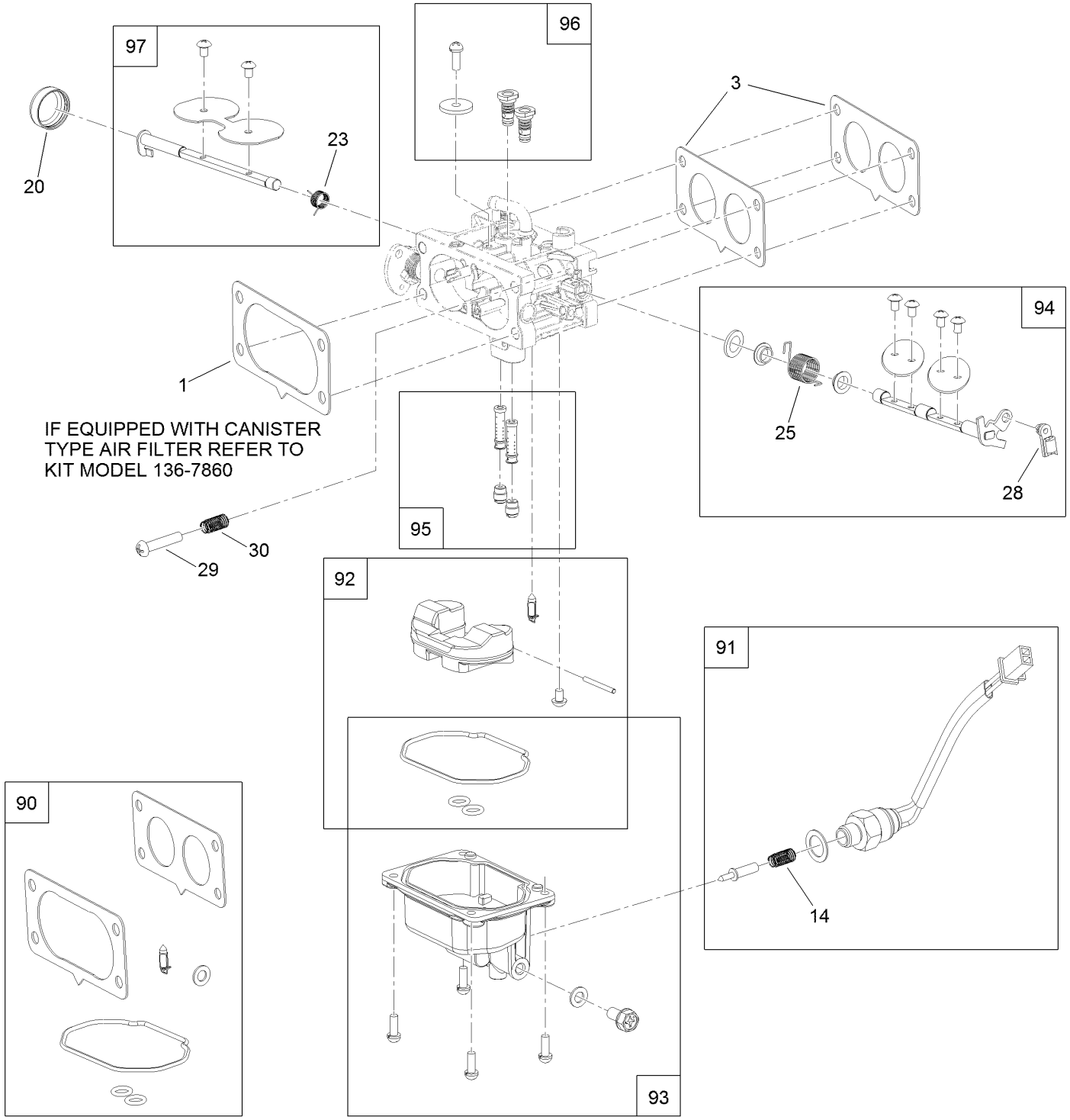

Carburetor Assembly (continued)

Ref.	Part Number	Qty.	Description
1	127-9251	1	Gasket-Carburetor
3	127-9246	2	Gasket-Carburetor
14	127-9319	1	Spring
20	127-9325	1	Cover-Shaft, Choke
23	127-9328	1	Spring
25	133-9957	1	Spring
28	127-9333	1	Clamp-Lock
29	127-9334	1	Screw-PPH
30	127-9335	1	Spring

Ref.	Part Number	Qty.	Description
90	127-9290	1	Carburetor Repair Kit
91	127-9292	1	Solenoid Kit
92	127-9340	1	Float Kit
93	127-9341	1	Bowl Kit
94	133-9960	1	Throttle Shaft Kit
95	133-9959	1	Nozzle And Jet Kit
96	133-9958	1	Air Jet Kit
97	127-9345	1	Choke Shaft Kit

Air Intake and Filtration Assembly

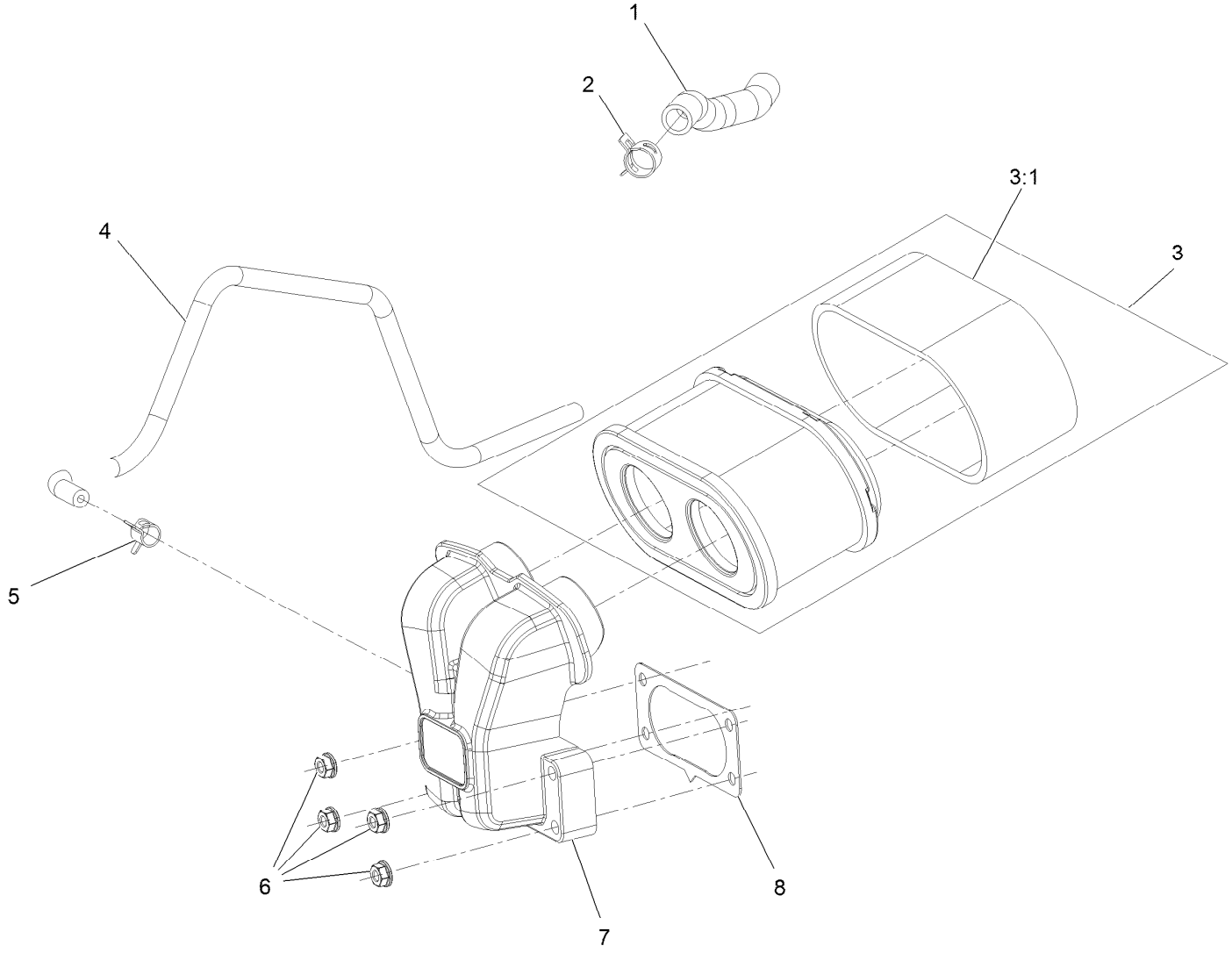

Air Intake and Filtration Assembly (continued)

Ref.	Part Number	Qty.	Description
1	127-9235	1	Tube-Breather
2	127-9234	2	Clamp-Hose
3	136-7806	1	Air Filter Kit
3:1	136-7804	1	Prefilter
4	127-9253	1	Hose-Fuel
5	127-9187	1	Clamp-Hose
6	120-4236	4	Nut-Flange
7	127-9047	1	Manifold-Filter, Air
8	127-9251	1	Gasket-Carburetor

Ignition and Cooling Fan

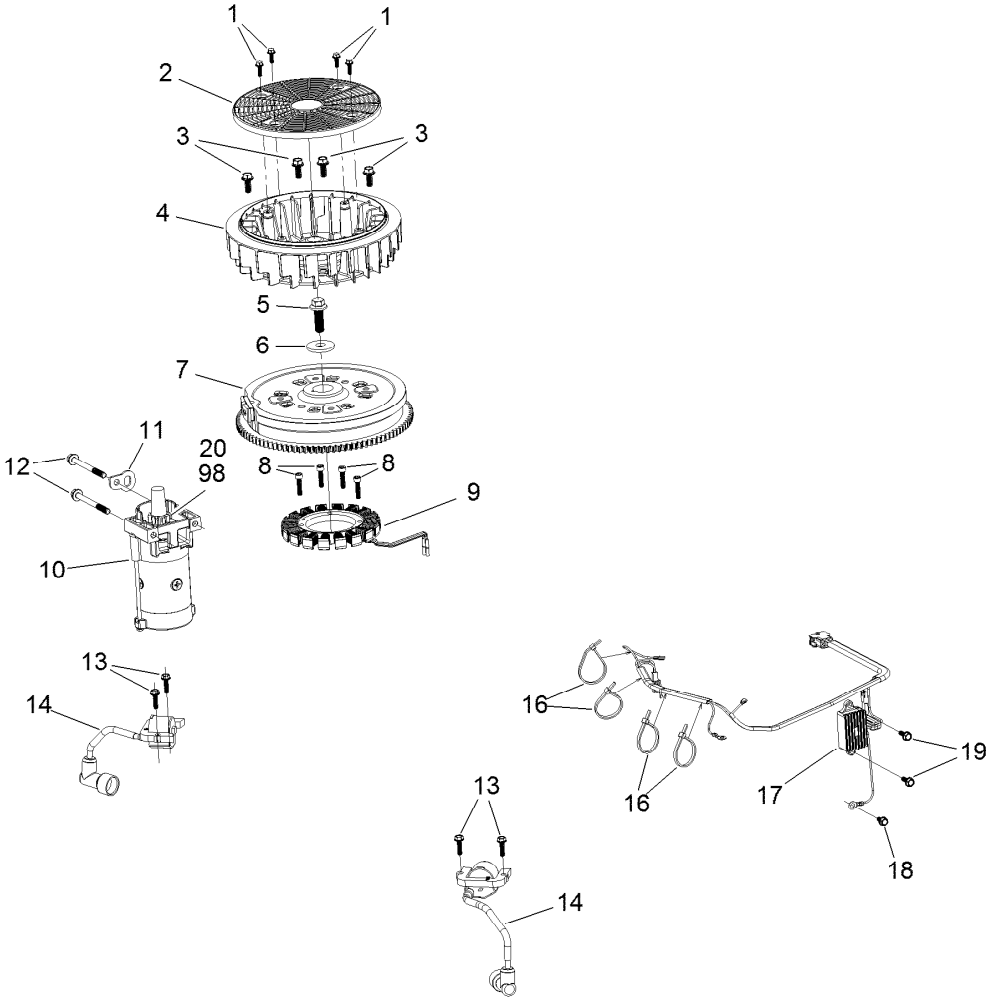

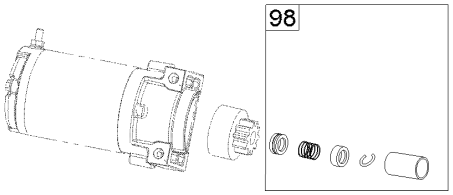

Ignition and Cooling Fan (continued)

Ref.	Part Number	Qty.	Description
1	127-9197	4	Screw-HWH
2	127-9198	1	Screen-Rotating
3	127-9199	4	Screw-HWH
4	127-9200	1	Fan-Cooling
5	127-9201	1	Screw-HWH
6	127-9202	1	Washer-Spring
7	127-9306	1	Flywheel
8	127-9210	4	Screw-HSH
9	136-7876	1	Alternator
10	136-7880	1	Motor-Starter
11	127-9208	1	Bracket-Lift
12	120-4231	2	Screw-HHF
13	121-0007	4	Bolt-Flange
14	136-7883	2	Ignition Coil ASM
16	127-9220	4	Tie-Zip
17	136-7879	1	Regulator-Voltage, W/Harness
18	120-4216	1	Screw-HHF
19	120-4232	2	Screw-HHF
20	133-1562	1	Pinion-Starter
98	133-1566	1	Starter Repair Kit

Crankcase and Crankshaft Assembly

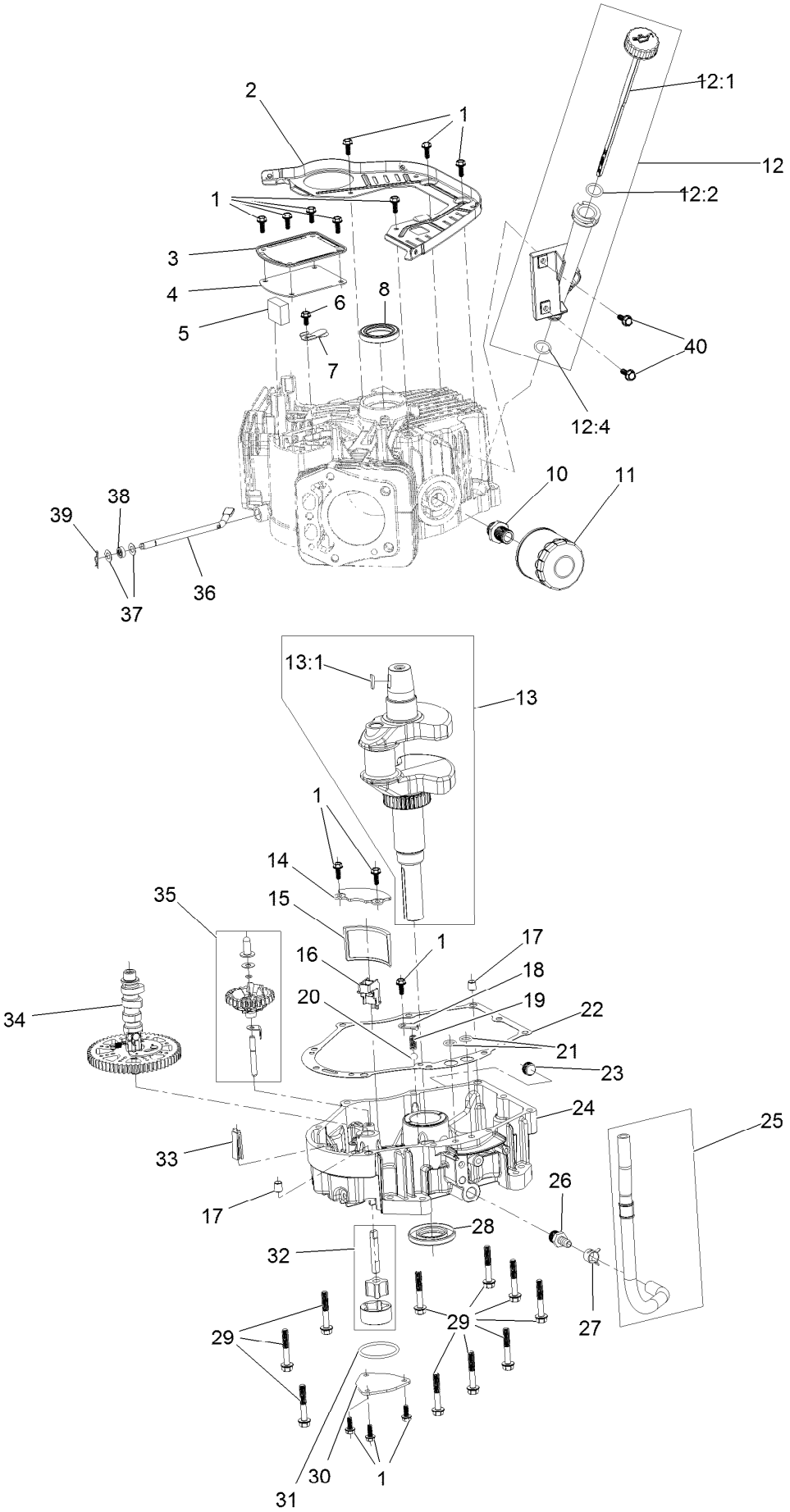

Crankcase and Crankshaft Assembly (continued)

Ref.	Part Number	Qty.	Description
1	120-4232	14	Screw-HHF
2	127-9212	1	Baffle
3	127-9213	1	Cover-Breather
4	127-9214	1	Gasket-Breather
5	127-9215	1	Filter-Breather
6	120-4216	1	Screw-HHF
7	127-9217	1	Valve-Breather
8	120-4267	1	Seal-Oil
10	136-7884	1	Adaptor-Filter, Oil
11	136-7848	1	Filter-Oil
12	127-9218	1	Oil Tube ASM
12:1	127-9283	1	Dipstick
12:2	127-9284	1	O-Ring
12:4	127-9286	1	O-Ring
13	127-9255	1	Crankshaft
13:1	120-4320	1	Key-Woodruff
14	127-9261	1	Cover-Screen, Oil
15	127-9262	1	Screen-Oil
16	127-9263	1	Retainer-Screen
17	120-4274	2	Pin-Dowel
18	127-9264	1	Plate-Retainer
19	127-9265	1	Spring
20	127-9266	1	Valve-Ball
21	120-4262	2	O-Ring
22	127-9267	1	Gasket-Cover, Crankcase
23	133-9805	1	Plug-Drain
24	133-9806	1	Cover-Crankcase
25	127-9293	1	Oil Drain Hose ASM
26	127-9275	1	Fitting-Hose
27	127-9276	1	Clamp-Hose
28	127-9271	1	Seal
29	121-0473	10	Screw-HHF
30	127-9274	1	Cover-Oil Pump
31	127-9273	1	O-Ring
32	127-9272	1	Oil Pump ASM
33	120-4275	1	Deflector-Oil, Rubber
34	133-1568	1	Camshaft
35	136-7882	1	Governor ASM
36	127-9238	1	Shaft-Governor
37	120-4258	2	Washer-Plain
38	120-4257	1	Seal-Oil
39	120-4256	1	Pin-Hair
40	120-4232	2	Screw-HHF

Governor Control Assembly

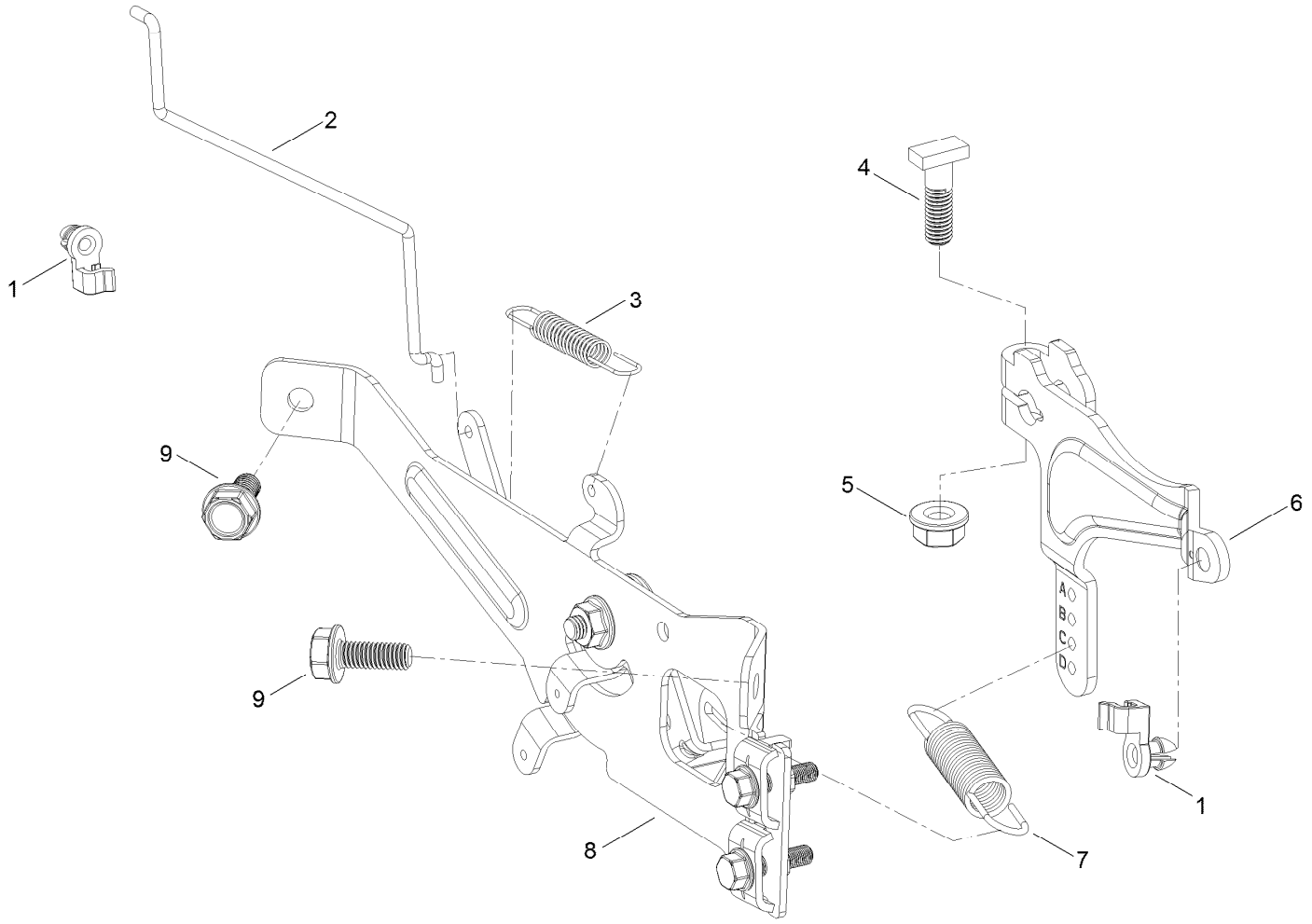

Governor Control Assembly (continued)

Ref.	Part Number	Qty.	Description
1	127-9250	2	Clip-Linkage
2	127-9242	1	Linkage-Choke
3	127-9241	1	Spring-Governor
4	120-4238	1	Bolt-Arm, Governor
5	120-4236	1	Nut-Flange
6	133-9961	1	Arm-Governor
7	133-9962	1	Spring-Governor
8	133-1570	1	Control Plate ASM
9	120-4232	2	Screw-HHF

Piston and Cylinder Head Assembly

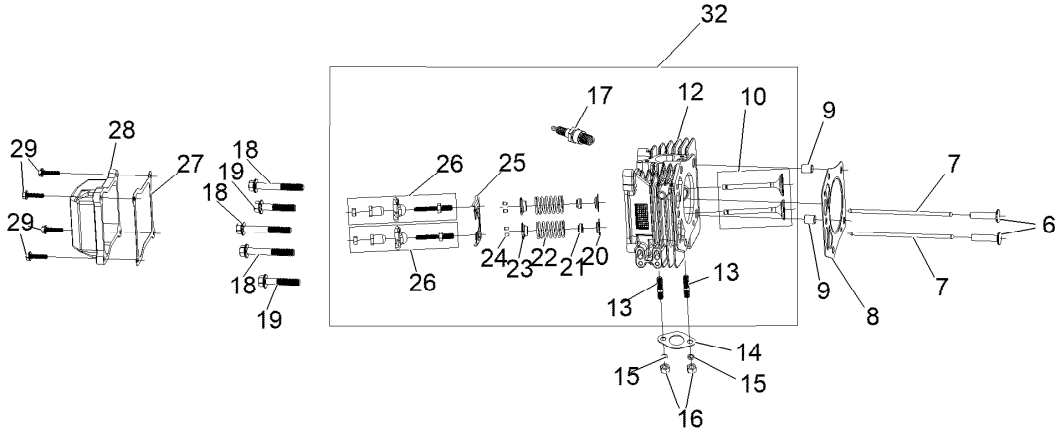

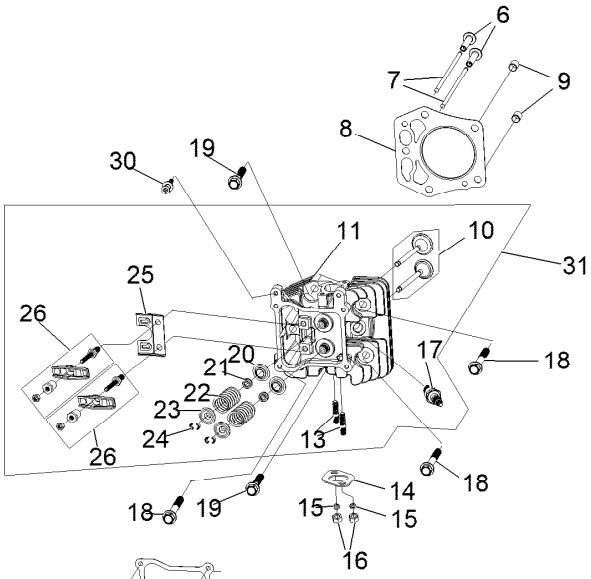

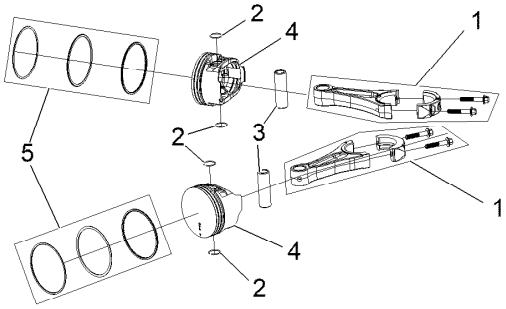

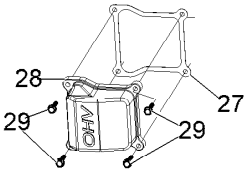

Piston and Cylinder Head Assembly (continued)

Ref.	Part Number	Qty.	Description
1	127-9256	2	Connecting Rod ASM
2	127-9258	4	Clip-Pin, Piston
3	127-9257	2	Pin-Piston
4	127-9259	2	Piston
5	127-9260	2	Piston Ring Set
6	127-9224	4	Lifter-Valve
7	127-9225	4	Rod-Push
8	127-9226	2	Gasket-Head, Cylinder
9	127-9227	4	Pin-Dowel
10	127-9228	2	Valve Set
11	133-9802	1	Head-Cylinder, Right
12	133-9804	1	Head-Cylinder, Left
13	121-0464	4	Stud-Exhaust
14	120-4317	2	Gasket-Exhaust
15	127-9279	4	Washer-Lock, Split
16	121-0199	4	Nut-HH
17	81-3250	2	Spark Plug
18	127-9231	6	Screw-HWH
19	127-9232	4	Screw-HWH
20	120-4303	4	Seat-Spring, Valve
21	120-4304	4	Seal-Stem, Valve
22	120-4305	4	Spring-Valve
23	120-4306	4	Retainer-Spring, Valve
24	120-4307	8	Keeper-Valve
25	127-9233	2	Plate-Guide, Push Rod
26	136-7881	4	Rocker Arm ASM
27	127-9295	2	Gasket-Valve Cover
28	127-9050	2	Cover-Valve
29	120-4225	8	Screw-HHF
30	120-4214	1	Screw-Shoulder, HH
31	136-7891	1	Complete Right Head ASM
32	136-7892	1	Complete Left Head ASM

Blower Housing Assembly

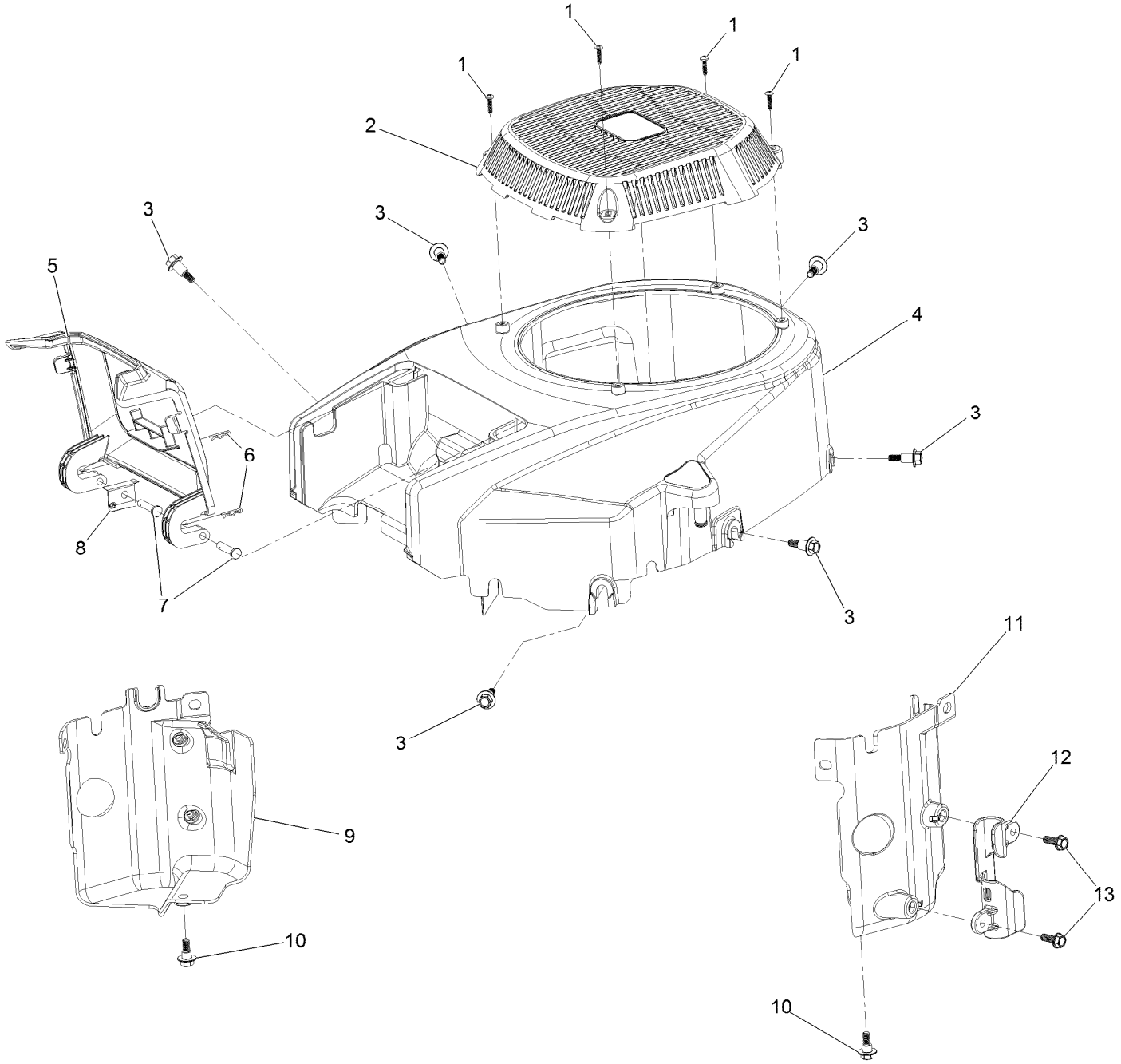

Blower Housing Assembly (continued)

Ref.	Part Number	Qty.	Description
1	133-1571	4	Screw-PPH, Plastic
2	127-9045	1	Cover-Fan
3	127-9196	6	Screw-Shoulder, HWH
4	133-1572	1	Shroud-Engine
5	127-9046	1	Door-Filter, Air
6	127-9280	2	Pin-Hair
7	127-9282	2	Pin
8	127-9281	1	Plate-Spring
9	136-7877	1	Baffle-Air, Left
10	120-4210	2	Screw-Shoulder, HHF
11	136-7878	1	Baffle-Air, Right
12	127-9287	1	Cleat-Hose
13	120-4232	2	Screw-HHF

Gasket and Seal Kit

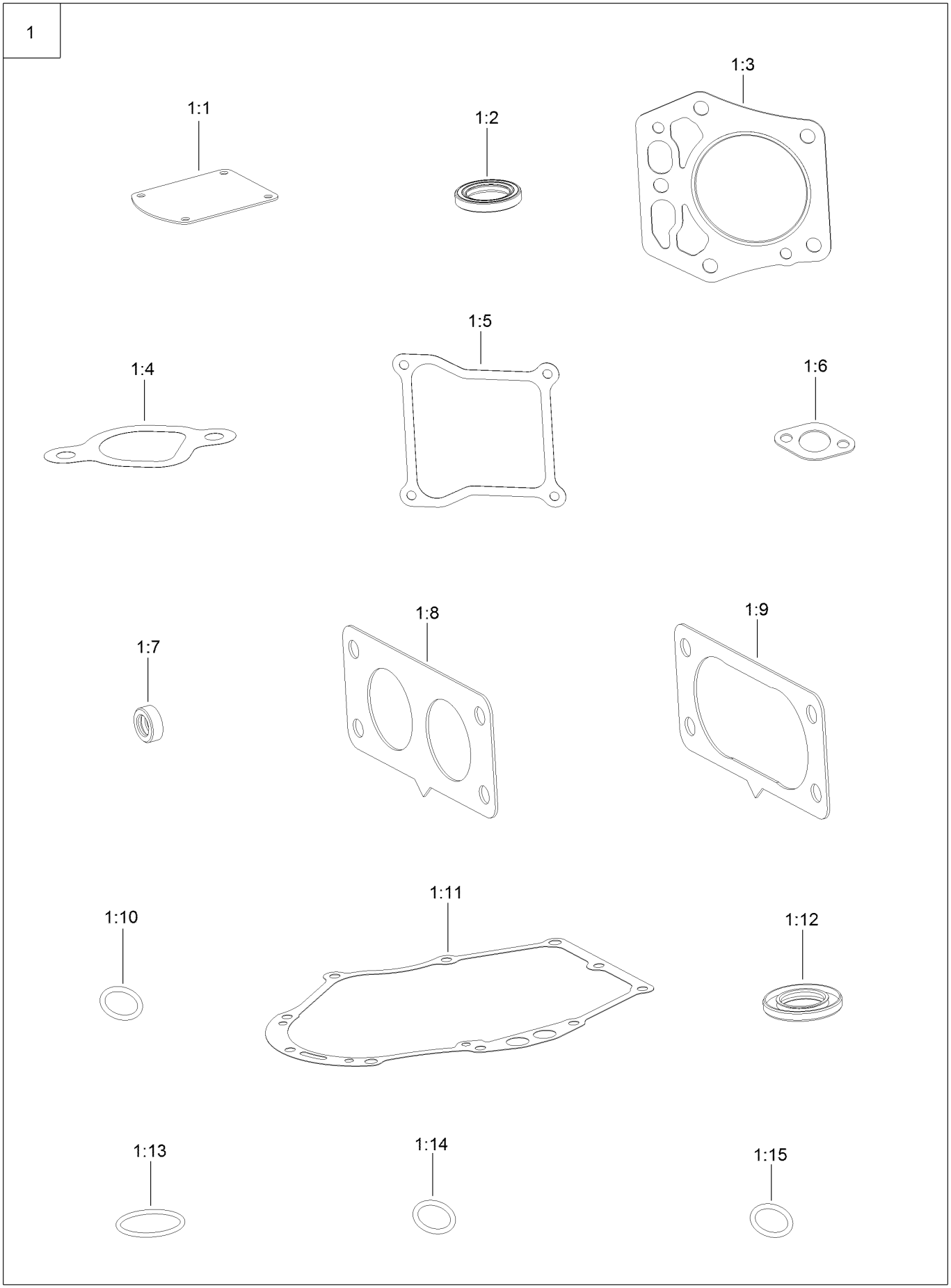

Gasket and Seal Kit (continued)

Ref.	Part Number	Qty.	Description
1	127-9296	1	Gasket And Seal Kit
1:1	127-9214	1	Gasket-Breather
1:2	120-4267	1	Seal-Oil
1:3	127-9226	2	Gasket-Head, Cylinder
1:4	127-9230	2	Gasket-Intake
1:5	127-9295	2	Gasket-Valve Cover
1:6	120-4317	2	Gasket-Exhaust
1:7	120-4257	1	Seal-Oil

Ref.	Part Number	Qty.	Description
1:8	127-9246	2	Gasket-Carburetor
1:9	127-9251	1	Gasket-Carburetor
1:10	120-4262	2	O-Ring
1:11	127-9267	1	Gasket-Cover, Crankcase
1:12	127-9271	1	Seal
1:13	127-9273	1	O-Ring
1:14	127-9284	1	O-Ring
1:15	127-9286	1	O-Ring

Body Styling and Fuel Tank Assembly

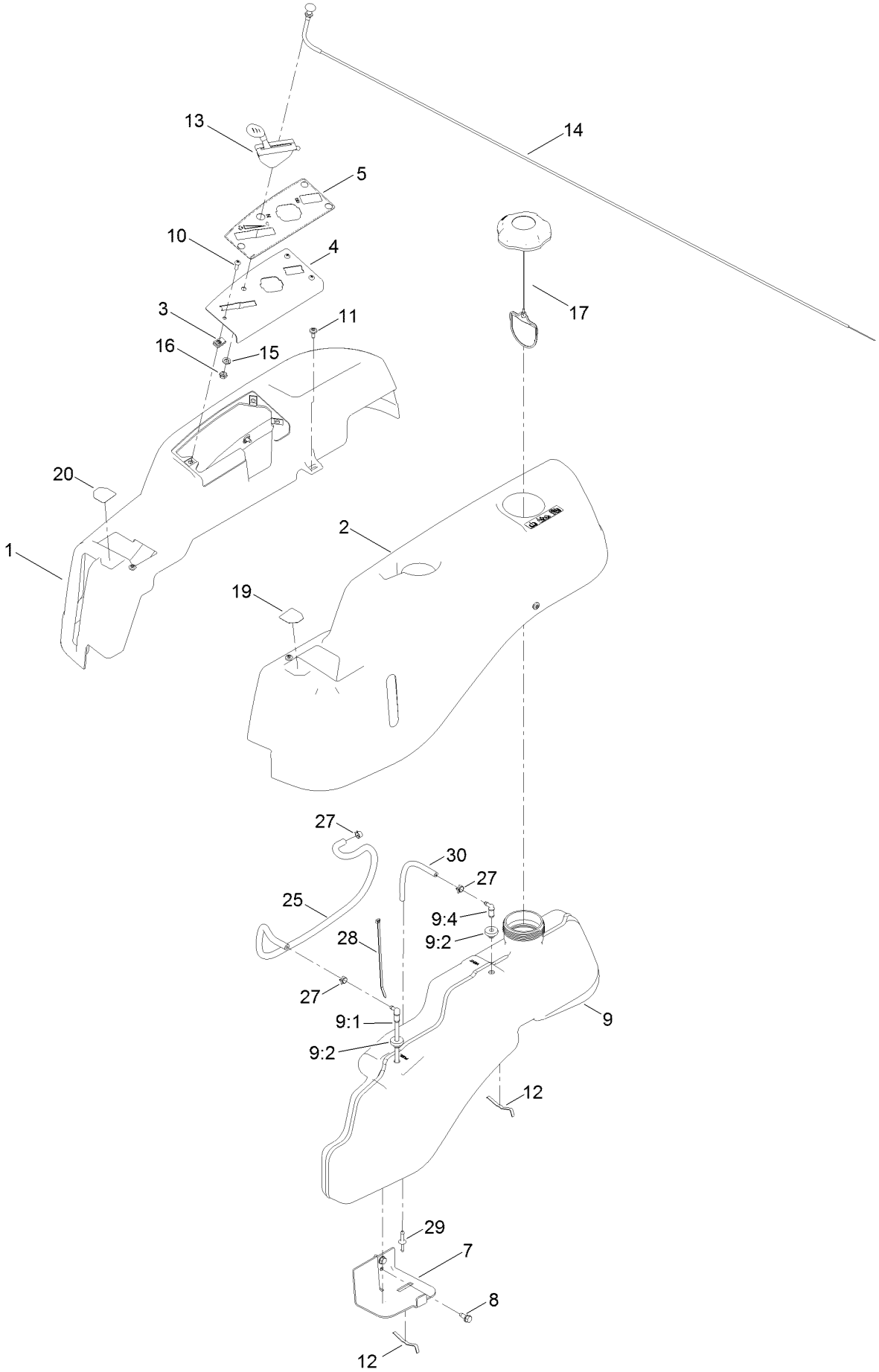

Body Styling and Fuel Tank Assembly (continued)

Ref.	Part Number	Qty.	Description
1	119-3335	1	Pod-RH
2	137-7008	1	Pod-LH
3	107069	3	Clip
4	119-3378-03	1	Plate-Control
5	121-0772	1	Decal-Panel, Control
7	119-3476-03	1	Support-Tank, Front
8	32144-70	4	Screw-HWHTF
9	119-3324	1	Fuel Tank ASM
9:1	121-0793	1	Connector-Elbow, 90 DEG
9:2	46-6560	2	Bushing
9:4	117-7400	1	Fitting-Plastic
10	3258-166	3	Screw-PRH
11	120-7950	6	Screw-Torx
12	609830	2	Spring
13	121-0769	1	Cable-Throttle
14	112-9753	1	Cable-Choke
15	3253-21	1	Washer-Lock
16	3220-3	1	Nut-HJ
17	137-4119	1	Cap-Fuel, Ratcheting
19	119-8814	1	Decal-Lever, Control (LH)
20	119-8815	1	Decal-Lever, Control (RH)
25	109-0281	1	Hose-Fuel
27	2412-98	3	Clamp-Hose
28	614249	1	Tie-Cable ●
29	117-5399	1	Adaptor-Orifice
30	110-1876	1	Hose-Fuel

● Not illustrated

Battery and Electrical Assembly

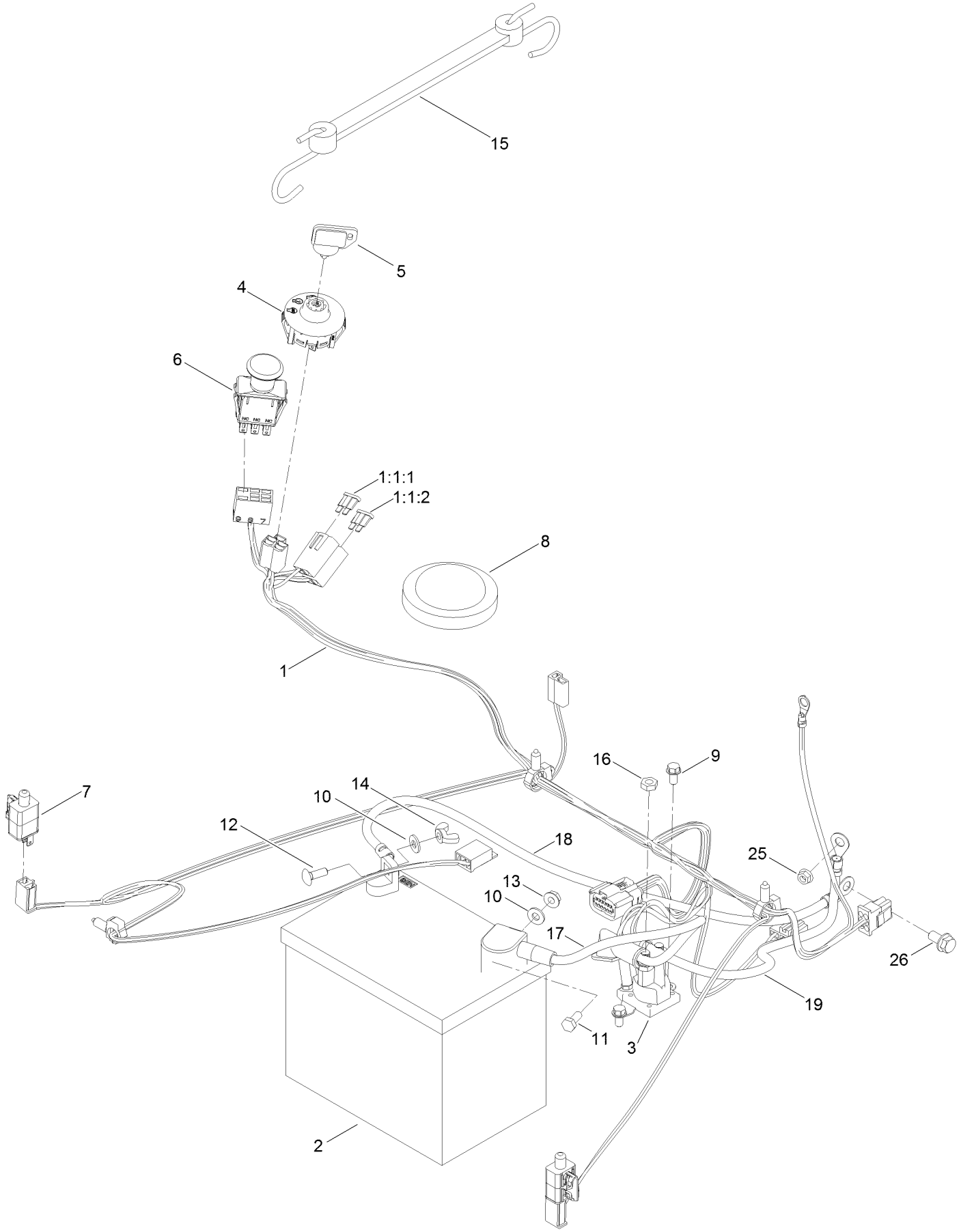

Battery and Electrical Assembly (continued)

Ref.	Part Number	Qty.	Description
1	136-7482	1	Harness-Wire
1:1:1	109103	1	Fuse-Blade, 30 Amp
1:1:2	109102	1	Fuse-Blade, 25 Amp
2	105-1692	1	Battery, 230CCA W/O Electrolyte
3	117-1197	1	Solenoid
4	137-4100	1	Switch-Ignition
5	63-8360	1	Key-Ignition
6	103-5221	1	Switch-PTO
7	110-6765	2	Switch
8	100-3524	1	Switch-Seat
9	32144-4	2	Screw-HWH
10	3256-22	2	Washer-Flat
11	321-3	1	Screw-HH
12	3229-1	1	Screw-CARR
13	32128-33	1	Nut-HF
14	32103-22	1	Nut-Wing
15	104-2466	1	Holddown-Battery
16	3220-2	2	Nut-Jam
17	119-8897	1	Cable-Battery, Red
18	121-0711	1	Cable-Battery, Positive
19	119-8899	1	Cable-Battery, Black
25	33003-00	1	Nut-HF
26	3234-14	1	Screw-HHF

42 Inch Deck Assembly

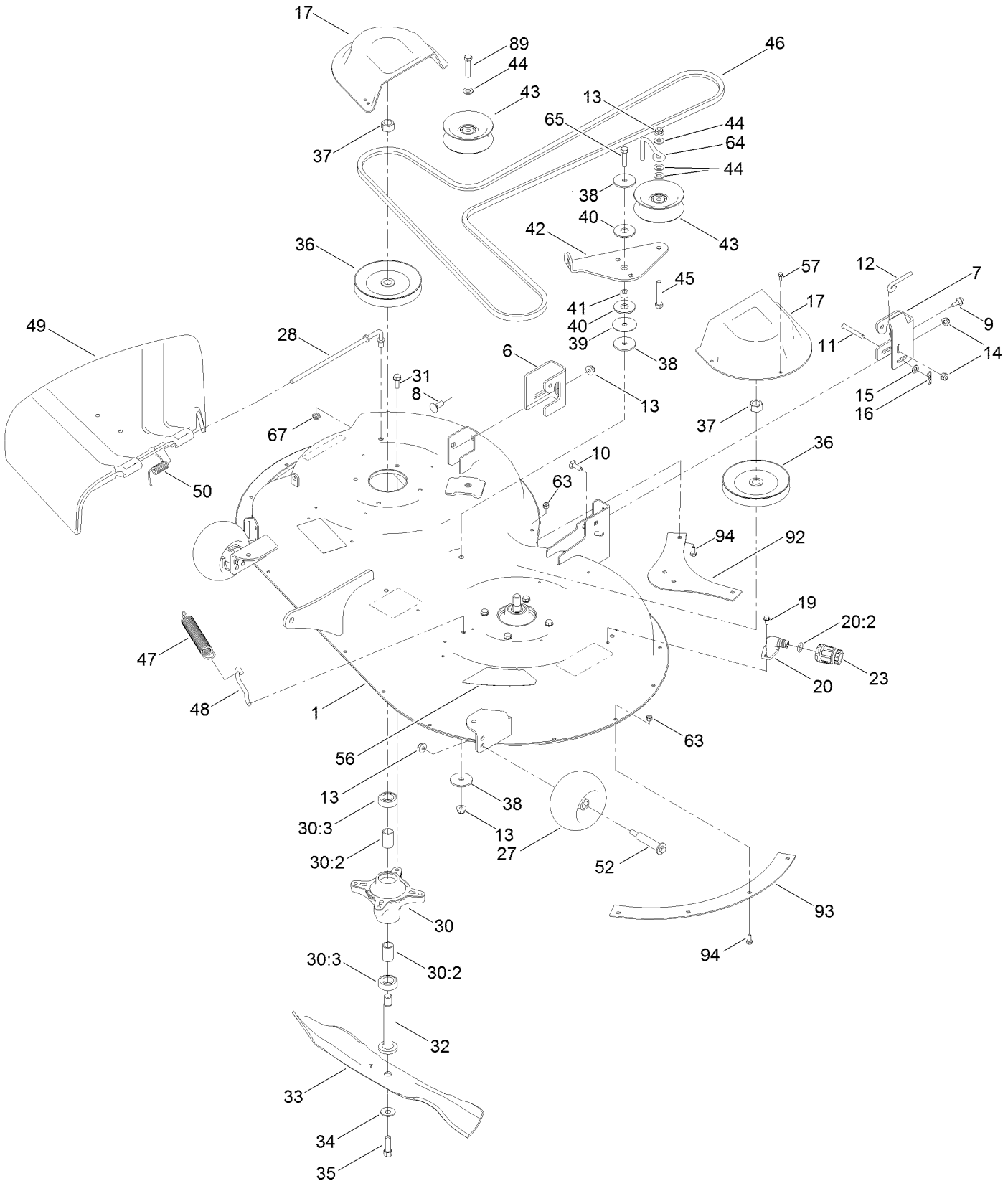

42 Inch Deck Assembly (continued)

Ref.	Part Number	Qty.	Description
1	137-7041	1	42 Inch Deck And Decal ASM
6	131-4138	1	Bracket-Hanger, RH
7	131-1091	1	Bracket-Hanger, LH
8	3231-2	2	Bolt-CARR
9	120-7024	1	Screw-Shoulder, HWH
10	3230-22	1	Screw-CARR
11	110-0618	1	Pin-Clevis
12	131-0955	1	Rod-Level, Deck
13	104-8301	6	Nut-HF, NI
14	104-8300	2	Nut-HF, NI
15	3256-23	1	Washer-Plain
16	1-806003	1	Pin-Cotter
17	108-7889	2	Cover-Belt
19	32144-4	2	Screw-HWH
20	133-9289	1	Fitting-Washout
20:2	133-9290	1	O-Ring
23	95-3270	1	Connector-Hose
27	1-603299	2	Roller-Scalp, Anti
28	137-2019	1	Rod-Pivot
30	121-0751	2	Spindle ASM
30:2	120-7935	2	Spacer
30:3	136-5441	2	Bearing-Ball
31	32144-41	8	Screw-Taptite
32	117-7268	2	Shaft-Spindle
33	137-1999-03	2	Blade
34	3290-465	2	Washer-Belleville
35	26-0671	2	Screw-HH
36	125-5574	2	Pulley
37	3219-6	2	Nut-Hex
38	63-7400	3	Washer-Rebound
39	120-2229	1	Washer
40	114-0463	2	Washer-Friction, Composite
41	115-4986	1	Spacer
42	114-8540	1	Arm-Idler
43	132-9420	2	Pulley-Idler, Flat
44	3256-24	4	Washer-Flat
45	323-11	1	Screw-HH
46	119-8819	1	V-Belt
47	106-2177	1	Spring-Extension
48	88-5970	1	Hook-Return, Spring
49	137-7046	1	Deflector
50	110-6694	1	Spring-Torsion
52	112-3977	2	Bolt-Shoulder
56	117-1222	1	Decal
57	32144-1	6	Screw-Taptite
63	3296-42	8	Nut-Lock, NI
64	107-7307	1	Guide-Idler, Belt
65	323-8	1	Screw-HH
67	3296-59	1	Nut-Lock, NI
89	323-9	1	Screw-HH
92	137-2036-03	1	Baffle-Blowout, Rear
93	137-2037-03	1	Baffle-Blowout, Side
94	321-3	8	Screw-HH

42 Inch Decal Assembly No. 137-7041

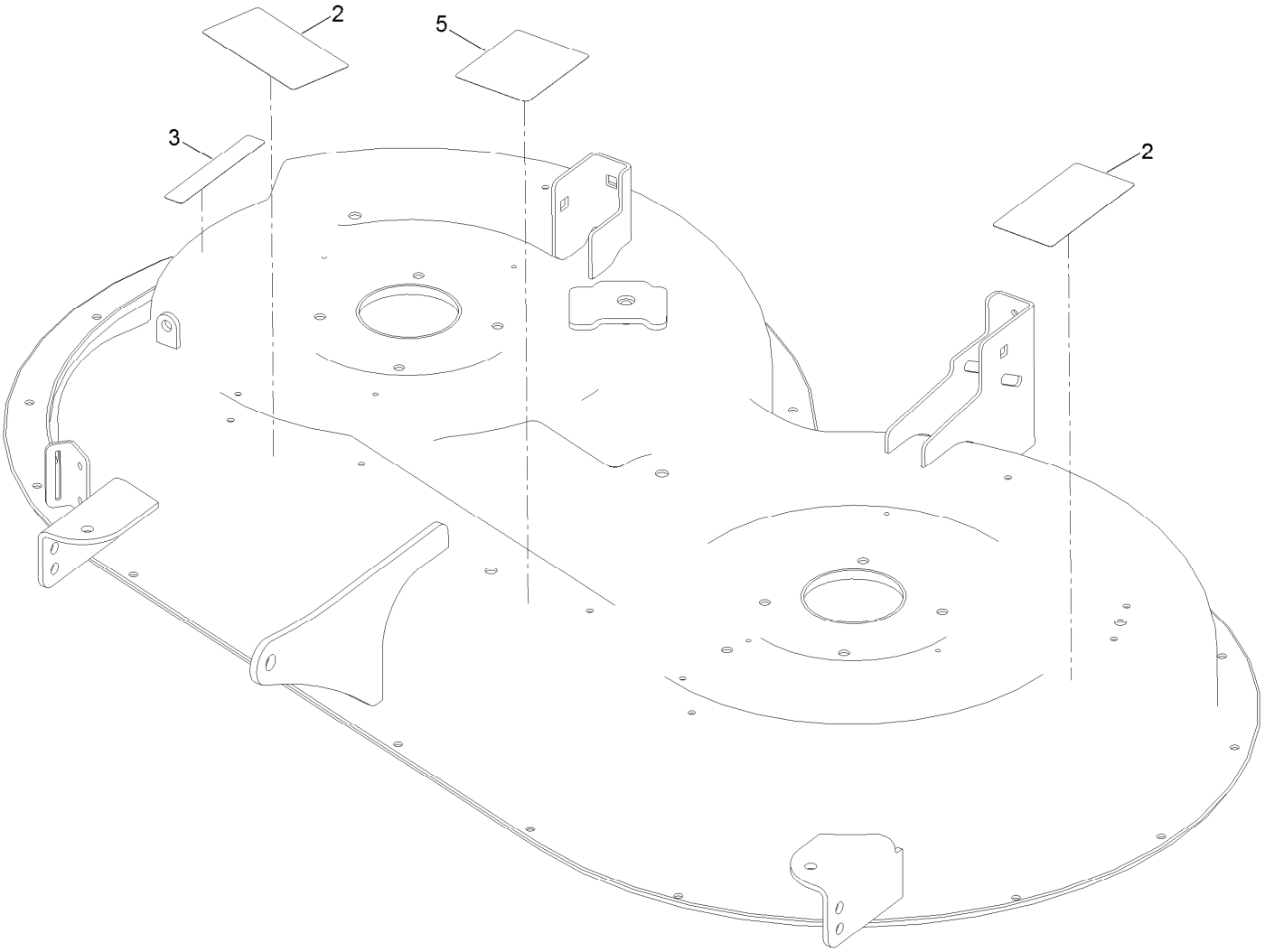

42 Inch Decal Assembly No. 137-7041 (continued)

Ref.	Part Number	Qty.	Description
2	132-0872	2	Decal-Danger, Deck
3	93-7009	1	Decal-Danger
5	105-7015	1	Decal-Routing, Belt

Model Specific Decal Assembly

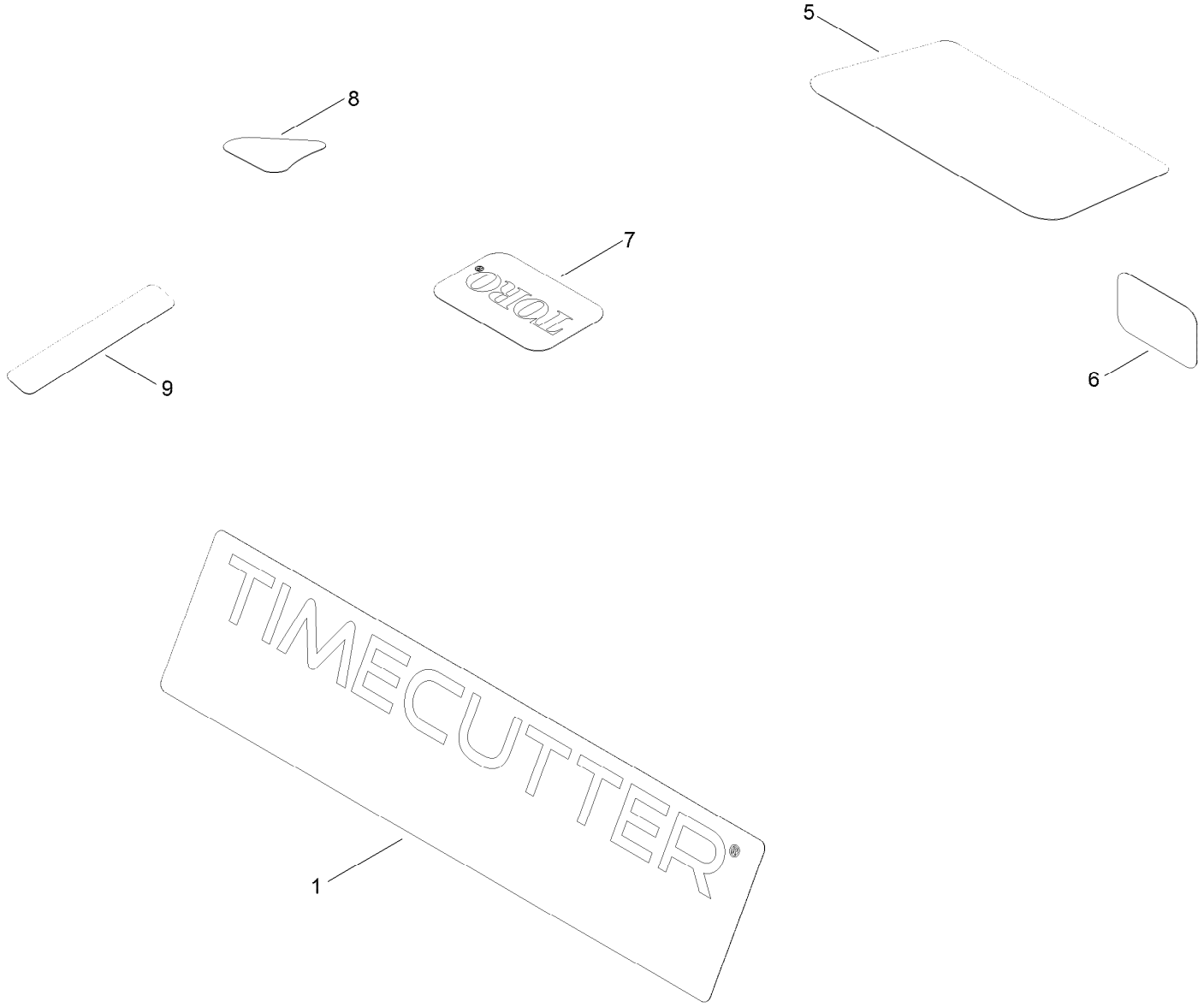

Model Specific Decal Assembly (continued)

Ref.	Part Number	Qty.	Description
1	131-3650	1	Decal-Timecutter
5	136-5618	1	Decal-Engine
6	127-9076	1	Placard-Intake
7	131-4157	1	Decal
8	131-1097	1	Decal-Drain, Oil
9	132-0904	1	Decal-Shutdown

Maintenance, HOC and Smart Speed Decal Assembly

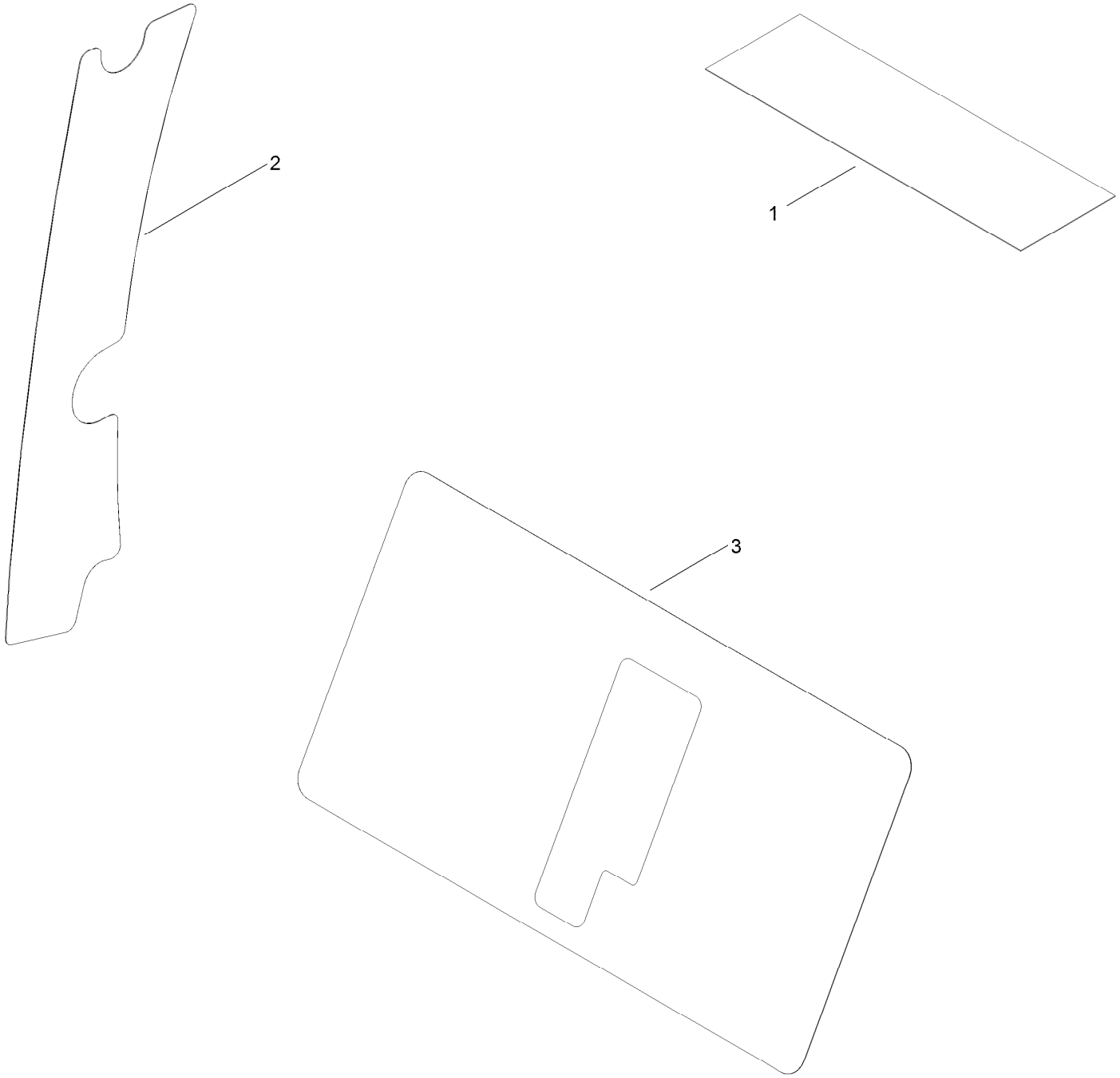

Maintenance, HOC and Smart Speed Decal Assembly (continued)

Ref.	Part Number	Qty.	Description
1	106-8717	1	Decal-Service, CE
2	119-8871	1	Decal-HOC
3	131-3947	1	Decal-Control, Speed

Clutch Assembly

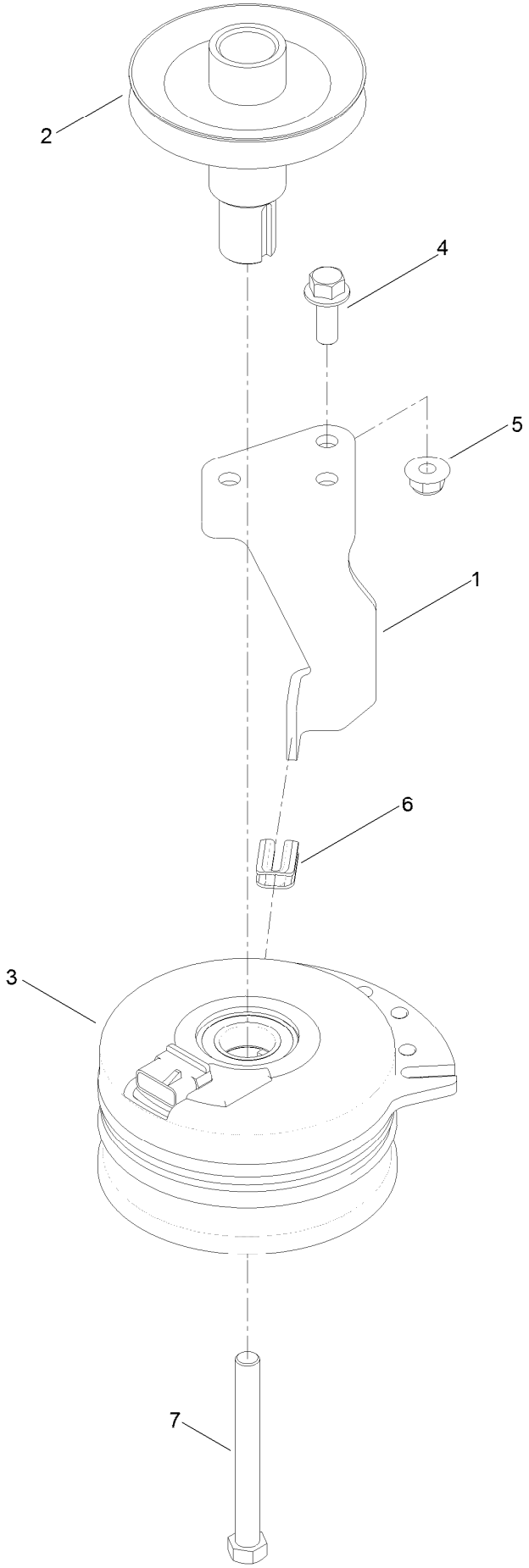

Clutch Assembly (continued)

Ref.	Part Number	Qty.	Description
1	119-8884	1	Stop-Clutch (Narrow)
2	130-6854	1	Pulley-Engine
3	117-7468	1	Clutch-Electric
4	3234-42	1	Screw-HHF
5	104-8301	1	Nut-HF, NI
6	120-2217	1	Isolator-Clutch
7	3212-16	1	Screw-HH

Attachments and Accessories

For 74726 TimeCutter SS 4225 Riding Mower

Product Name	Model/Part
Armrest Kit	105-6978
Hourmeter Kit	116-5461
All Season Synthetic Oil (10W30, QT)	117-0066
Seat Cover W/O Arm Rest - TC 18in	117-0096
Jack Mount Kit	126-5251
Jack Kit	127-6666
Fuel Stabilizer .05 oz	130-2393
4-Cycle Fuel, Snow And Lawn 32oz Can	131-3823
Attachment Mount Kit	131-3966
Toro Premium Fuel Treatment 12 Oz Bottle	131-6572
Weight Kit	131-7658
Deluxe Seat Kit	131-7699
Toro V-Twin Engine Maintenance Kit	132-4878
Floor Mat Kit	132-6921
Maintenance Kit Toro V-Twin HD Engine	136-7847
HD Air Cleaner Kit	136-7860
Replacement Blade Kit	137-1999-03P
Striping Kit	137-5030
42in Recycler Kit	137-7042
Bagging Enhancement Kit	137-7048
Weight Kit	138-2452
Pro-Control Damper Kit	138-7588
10w30 4-Cycle Engine Oil (32oz Bottle)	38280
Toro 4-Cycle SAE 30 Oil (32oz Bottle)	38903
Storage Cover	490-7516
Foot Assist Deck Lift Kit, 2011 and After Zero-Turn-Radius Riding Mower	79010
Sunshade Kit	79011
Assist Handle and Step Kit	79339
42in Bagger Timecutter SS (2017 And Up)	79397

Notes:

TORO®

Count on it.