Form No. 3433-833 Rev B

TORO®

Count on it.

Parts Catalog

TimeCutter® MX 5075T

Riding Mower

Model No. 74694—Serial No. 400000000 and Up

Register at www.Toro.com.
Original Instructions (EN)

3433-833 B

Ordering Replacement Parts

To order replacement parts, please supply the part number, the quantity, and the description of each part desired.

Understanding Reference Numbers

Each identified part in an illustration has a reference number. The reference number for a part also appears in the parts list, along with other information about the part.

This catalog uses two special reference number formats, one to indicate parts in a service assembly and another to indicate the quantity of a given part in an illustration.

Service Assembly Reference Numbers

Parts in service assemblies have reference numbers in the form a:b. The a represents the reference number of the entire service assembly and the b represents a sequential number unique to each part within the service assembly.

For example, a wheel assembly might be identified by reference number 6, the tire by 6:1, the valve by 6:2, and the wheel by 6:3. When you order the assembly identified by reference number 6, you receive all parts identified by reference numbers 6:1,6:2, and 6:3. However, you may also order any part individually. Reference numbers of this type appear in illustration and in parts lists.

Reference Numbers Indicating Quantity

In an illustration, if a reference number indicates more than one part, the reference number has the form nX y. The n represents the quantity of the part, the X is the multiplication symbol, and the y represents the reference number.

For example, in an illustration, the reference number 2X 37 means that two of the parts identified by reference number 37 are indicated.

Contents

Frame Assembly 4
Deck Lift Assembly 6
Caster and Wheel Assembly 8
Traction Drive Assembly 10
LH Transaxle Assembly No. 139-7460 12
RH Transaxle Assembly No. 139-7461 14
Brake Assembly 16
Rear Tire Assembly 18
Motion Control Assembly 20
Engine and Muffler Assembly 22
Fuel System Assembly with Non-Canister Style Air Filter 24
Carburetor Assembly 26
Air Intake and Filtration Assembly 28
Ignition and Cooling Fan 30
Crankcase and Crankshaft Assembly 32
Governor Control Assembly 34
Piston and Cylinder Head Assembly 36
Blower Housing Assembly 38
Gasket and Seal Kit 40
Body Styling and Fuel Pod Assembly 42
Electrical Assembly 44
50 Inch Deck Assembly 46
Decal Assembly 48
Seat Assembly 50
Seat Assembly No. 140-5044 52
Clutch Assembly 54
Attachments and Accessories 56

© 2022—The Toro® Company
8111 Lyndale Avenue South
Bloomington, MN 55420

Contact us at www.Toro.com.
Printed in the USA.
All Rights Reserved

Frame Assembly

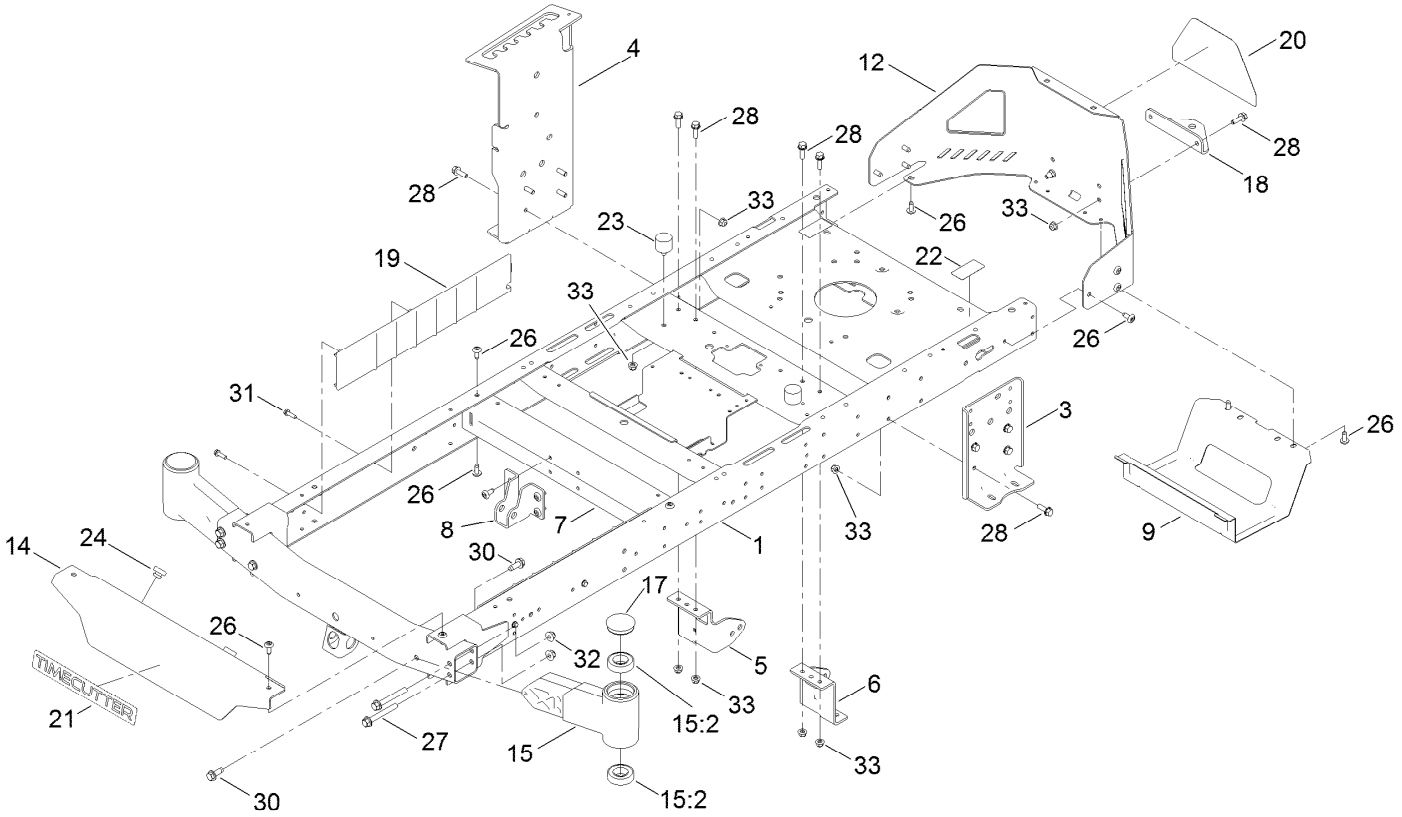

Frame Assembly (continued)

Ref.	Part Number	Qty.	Description
1	137-9820-01	1	Frame Assembly
3	138-7520-01	1	Plate-Mount, Hydro
4	139-2352-01	1	Plate-Mount Hydro, RH
5	137-7020-01	1	Mount-Hydro, Front (Right)
6	139-3211-01	1	Mount-Hydro, Front (Left)
7	138-2527-01	1	Brace-Cross, Lower
8	139-3260-01	1	Bracket-Mount Damper, Lower
9	138-0867-03	1	Guard-Muffler
12	138-9820-03	1	Guard-Engine
14	138-7596-01	1	Footrest
15	140-2097	2	Axle Stub ASM
15:2	109-3678	2	Bearing-Ball
17	138-7200	2	Cap-Grease
18	117-1232-03	1	Bracket-Hitch
19	138-7516	2	Guard-Rail
20	139-5890	1	Decal-Timecutter
21	139-2387	1	Decal-Timecutter
22	121-2989	2	Decal-Bypass
23	137-4803	2	Bumper-Rubber
24	140-3460	2	Bumper-Rubber
26	138-9753	20	Screw
27	139-2429	4	Screw-HHF
28	139-2596	14	Screw-HHF
30	139-2428	4	Screw-HWH
31	137-3099	4	Screw-Plastite, HWH
32	139-2430	4	Nut-HF, NI
33	119-4041	16	Nut-HF

Deck Lift Assembly

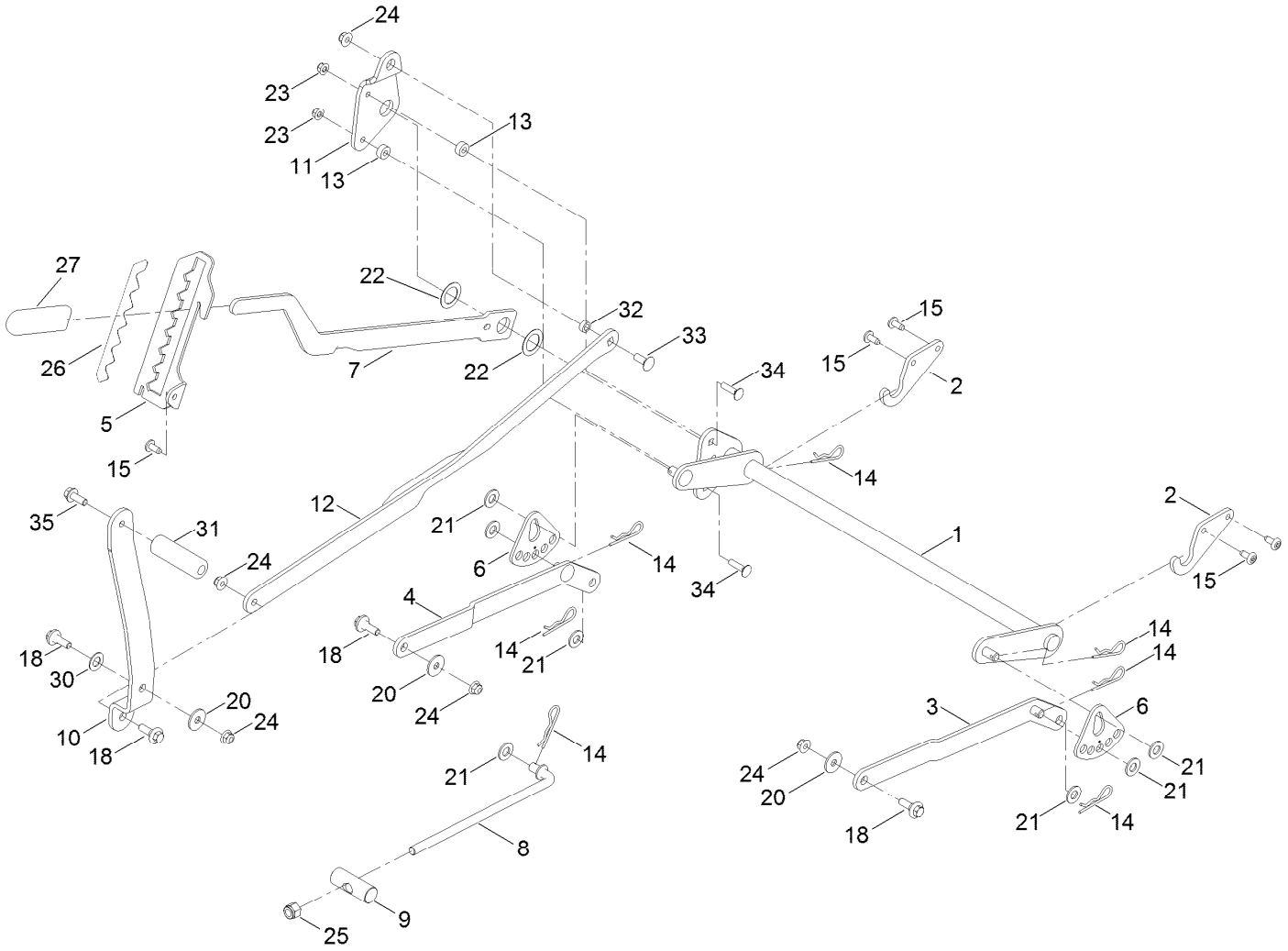

Deck Lift Assembly (continued)

Ref.	Part Number	Qty.	Description
1	137-7093-03	1	Deck Lift ASM
2	138-6021	2	Bracket-Pivot, Decklift
3	137-9844	1	LH Arm ASM
4	137-9846	1	RH Arm ASM
5	139-2350-01	1	Bracket-HOC
6	138-2564	2	Plate-Adjustment, HOC
7	137-7087-03	1	Lever-Lift
8	138-6050	1	Rod-Mount, Deck
9	119-8810	1	Pin-Pivot
10	138-2549-03	1	Pedal-Lift
11	137-7086	1	Plate-Footlift
12	140-2746-03	1	Link ASM
13	140-3461	2	Spacer
14	139-2562	7	Pin-Hair
15	138-9753	5	Screw
18	137-9847	4	Screw-Shoulder
20	140-5063	3	Washer-Hardened, Cz
21	139-2611	7	Washer-Flat
22	63-2290	2	Washer-Thrust
23	119-4041	2	Nut-HF
24	119-4042	5	Nut-HF, NI
25	139-1725	1	Nut-Hex
26	140-2748	1	Decal-HOC
27	1-633268	1	Grip-Lever
30	120-2273	1	Washer-Nylon
31	139-7452	1	Pedal-Foot Lift
32	140-2093	1	Spacer
33	139-2590	1	Screw-CARR
34	139-1702	2	Bolt-Carriage
35	139-2597	1	Screw-HHF

Caster and Wheel Assembly

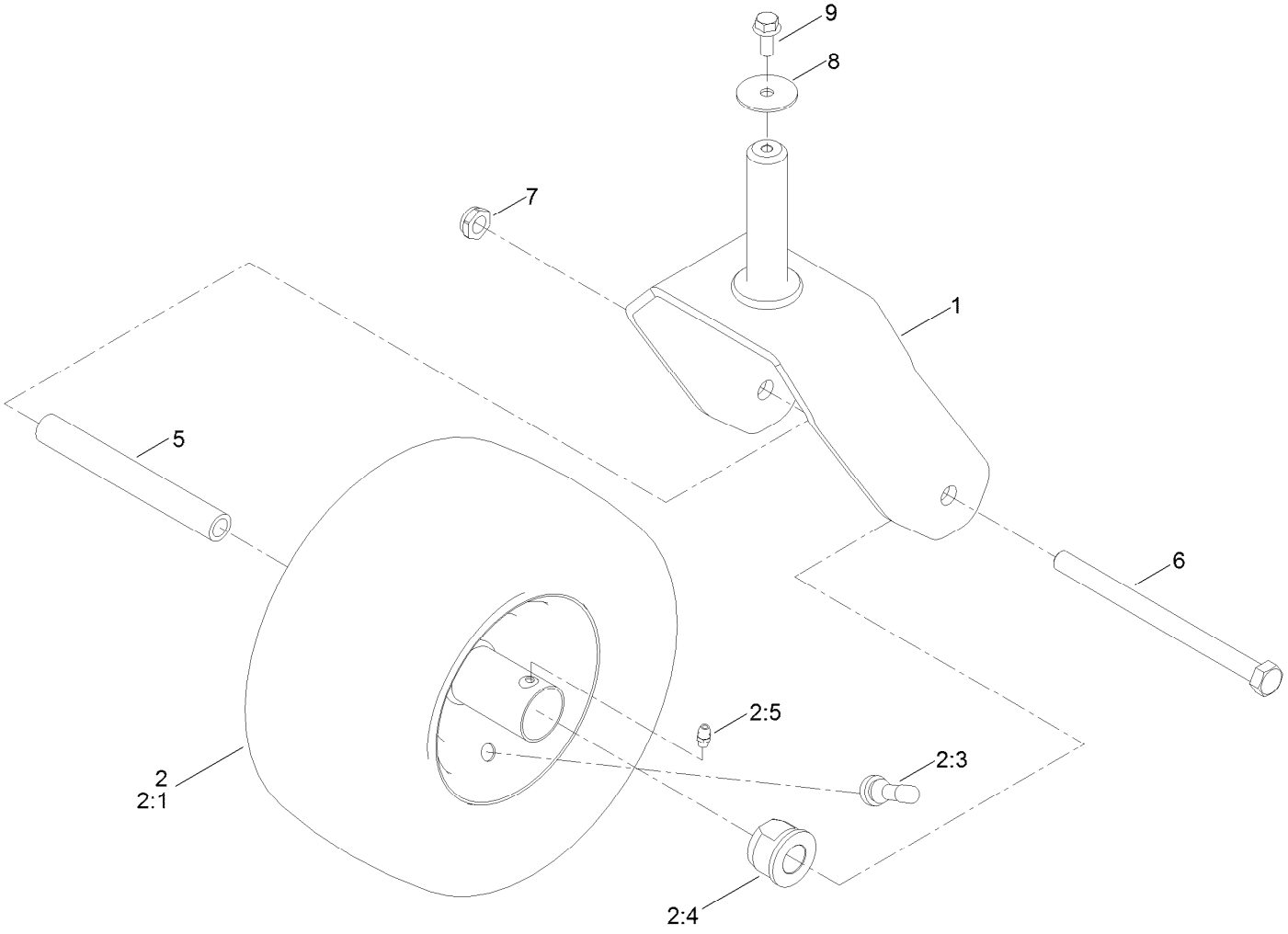

Caster and Wheel Assembly (continued)

Ref.	Part Number	Qty.	Description
1	138-9839-01	2	Fork ASM
2	139-5843	2	Tire ASM
2:1	138-7553	1	Tire
2:3	232-27	1	Stem-Valve
2:4	114-1640	2	Bushing-Flange
2:5	302-5	1	Fitting-Grease

Ref.	Part Number	Qty.	Description
5	138-9803	2	Spacer-Spanner
6	139-2609	2	Screw-HH
7	139-2617	2	Nut-Lock, NI
8	115-1151	2	Washer-Flat
9	139-2598	2	Screw-HHF

Traction Drive Assembly

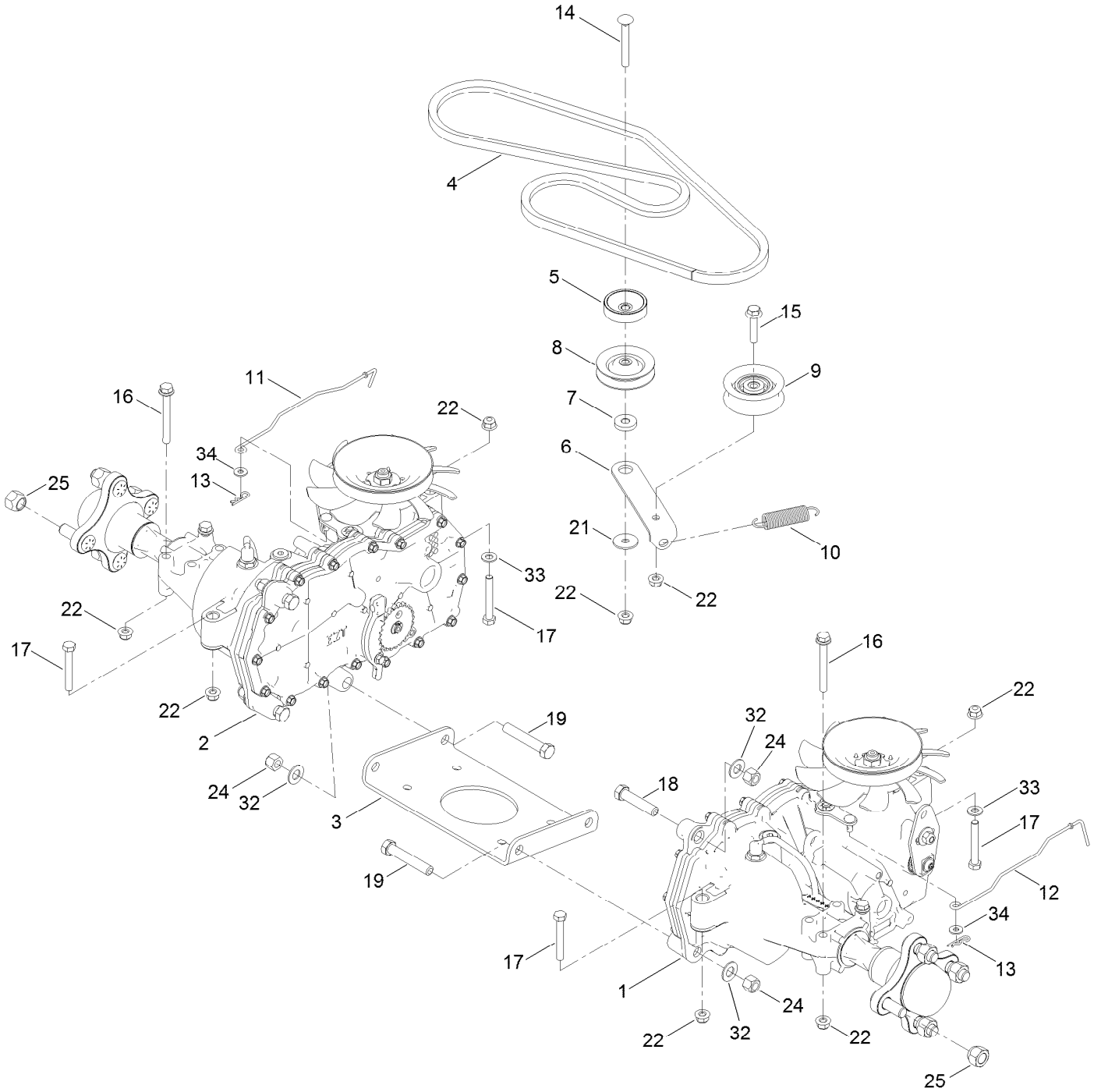

Traction Drive Assembly (continued)

Ref.	Part Number	Qty.	Description
1	139-7460	1	LH Hydro Transaxle ASM
2	139-7461	1	RH Hydro Transaxle ASM
3	138-2571-03	1	Crossplate-Hydro
4	139-2399	1	V-Belt
5	138-9809	1	Spacer
6	138-7276	1	Arm-Idler
7	138-7277	1	Spacer-Arm, Idler
8	68-0030	1	Idler
9	138-7597	1	Pulley-Idler, Flat
10	137-7040	1	Spring-Return, Pedal
11	138-7245	1	Rod-Bypass, RH
12	138-7243	1	Rod-Bypass, LH
13	137-3083	2	Pin-Hair

Ref.	Part Number	Qty.	Description
14	139-2588	1	Screw-CARR
15	140-5024	1	Screw-HHF
16	138-7590	4	Screw-HHF
17	120-9738	4	Screw-HH
18	139-2605	2	Screw-HH
19	139-2603	4	Screw-HH
21	5-4460	1	Washer-Pivot
22	119-4041	10	Nut-HF
24	119-4039	6	Nut-Hex, NI
25	139-2564	8	Nut-Lug
32	139-2610	6	Washer-Flat
33	120-9683	2	Washer-Plain
34	119-8952	2	Washer

LH Transaxle Assembly No. 139-7460

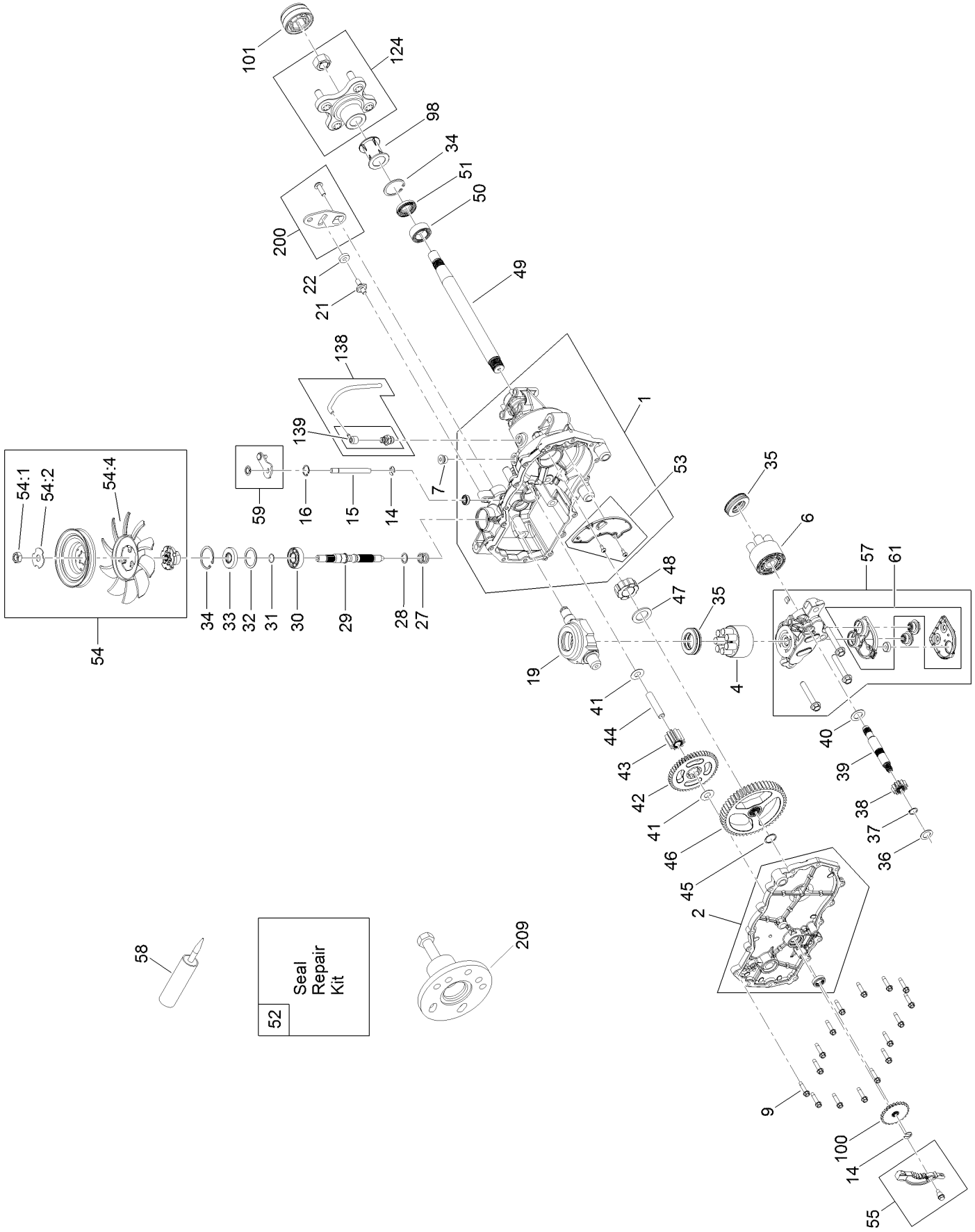

LH Transaxle Assembly No. 139-7460 (continued)

Ref.	Part Number	Qty.	Description
1	106-8695	1	Main Housing ASM
2	106-8696	1	Side ASM
4	110-8561	1	Pump Block ASM
6	103-2666	1	Cylinder Block Kit
7	104-2189	1	Plug-Thread, Straight
9	104-5305	16	Screw-HHF
14	106-8677	1	Ring-Retaining, External
15	106-8678	1	Rod-Bypass
16	106-8679	1	Ring-Retaining, Internal
19	104-5304	1	Swashplate-Trunnion
21	104-2116	1	Stud
22	112-9853	1	Puck-Friction
27	94-1936	1	Spring-Block
28	120-5538	1	Washer
29	104-5306	1	Shaft-Input
30	104-5311	1	Bearing-Ball
31	104-5307	1	Ring-Retaining
32	104-5308	1	Spacer
33	104-5310	1	Seal-Lip
34	104-5309	2	Ring-Retaining
35	94-6922	2	Bearing-Thrust
36	104-5339	1	Washer-Flat
37	104-5340	1	Ring-Retaining
38	104-5316	1	Gear-Pinnion, 13T
39	106-8683	1	Shaft-Motor
40	104-5360	1	Washer
41	119-5541	2	Washer
42	104-5317	1	Gear-10T/48T
43	104-5318	1	Gear-Jackshaft, 10T
44	104-5329	1	Pin-Jackshaft
45	112-9854	1	Ring-Spiral, Retaining
46	112-9855	1	Gear-52T, Bull
47	112-9856	1	Washer
48	112-9857	1	Bearing-Sleeve
49	120-7104	1	Shaft-Axle
50	112-9859	1	Bushing-Axle
51	112-9860	1	Seal-Lip
52	106-8686	1	Seal Kit
53	106-8697	1	Expansion Plate Kit
54	135-7349	1	Fan And Pulley Kit
54:1	116-9714	1	Nut-HJ
54:2	116-9708	1	Washer-Slotted
54:4	135-7364	1	Fan 7.0 X 10 Blade
55	106-8688	1	Brake Arm Kit
57	112-9861	1	Center Section Filter Kit
58	104-2147	1	Sealant
59	120-5549	1	Bypass Kit
61	114-1634	1	Filter Kit
98	120-7109	1	Tube-Axle
100	106-8694	1	Disc-Brake, Cog
101	115-5057	1	Cover-Nut, Axle
124	109-5939	1	Hub Kit
138	112-9866	1	Breather Kit
139	114-1635	1	Breather ASM
200	117-5362	1	Control Arm Kit
209	114-8467	1	Puller-Hub, 4 Bolt

RH Transaxle Assembly No. 139-7461

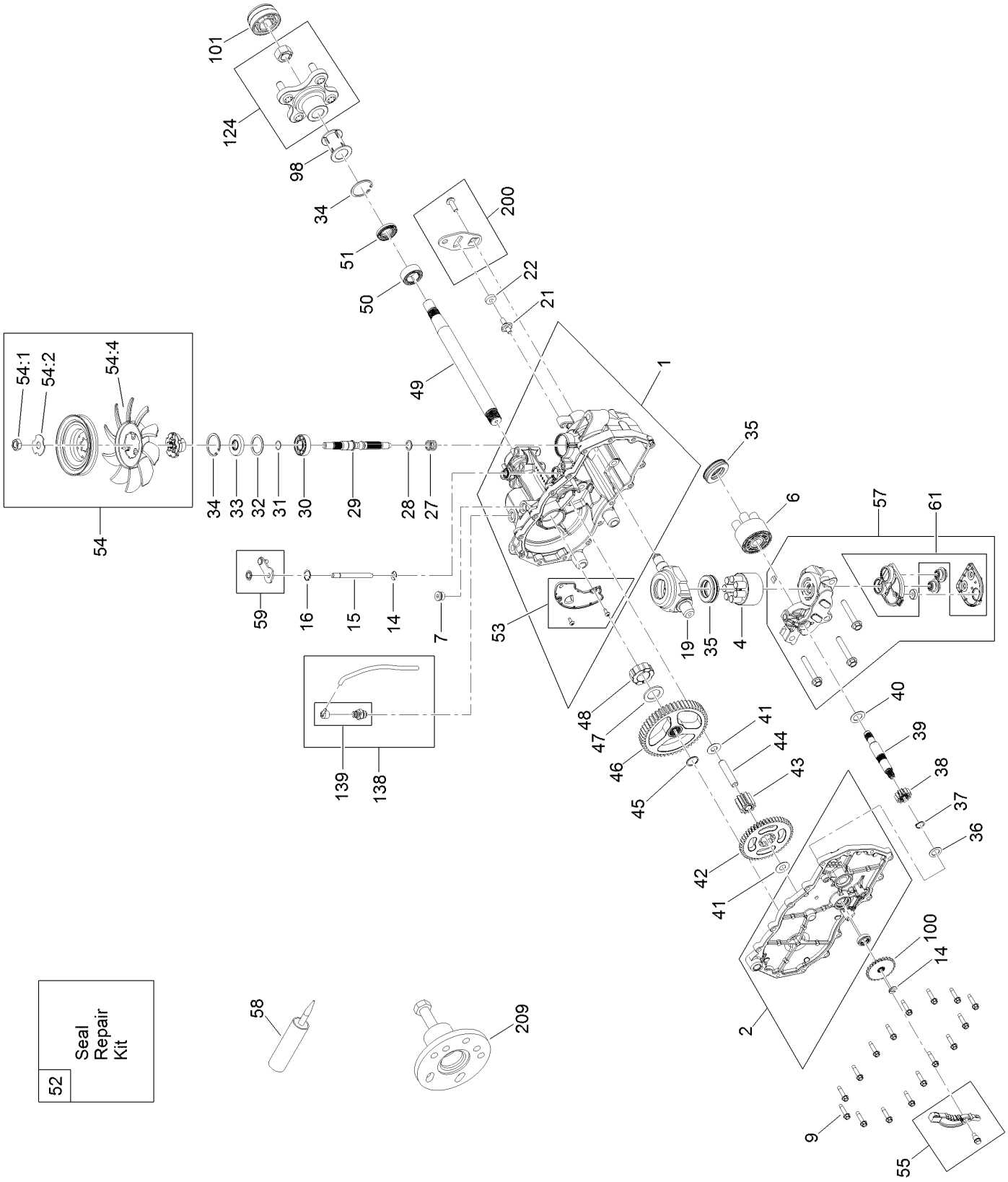

RH Transaxle Assembly No. 139-7461 (continued)

Ref.	Part Number	Qty.	Description
1	106-8674	1	Main Housing ASM
2	106-8675	1	Side ASM
4	110-8561	1	Pump Block ASM
6	103-2666	1	Cylinder Block Kit
7	104-2189	1	Plug-Thread, Straight
9	104-5305	16	Screw-HHF
14	106-8677	1	Ring-Retaining, External
15	106-8678	1	Rod-Bypass
16	106-8679	1	Ring-Retaining, Internal
19	104-5304	1	Swashplate-Trunnion
21	104-2116	1	Stud
22	112-9853	1	Puck-Friction
27	94-1936	1	Spring-Block
28	120-5538	1	Washer
29	104-5306	1	Shaft-Input
30	104-5311	1	Bearing-Ball
31	104-5307	1	Ring-Retaining
32	104-5308	1	Spacer
33	104-5310	1	Seal-Lip
34	104-5309	2	Ring-Retaining
35	94-6922	2	Bearing-Thrust
36	104-5339	1	Washer-Flat
37	104-5340	1	Ring-Retaining
38	104-5316	1	Gear-Pinnion, 13T
39	106-8683	1	Shaft-Motor
40	104-5360	1	Washer
41	119-5541	2	Washer
42	104-5317	1	Gear-10T/48T
43	104-5318	1	Gear-Jackshaft, 10T
44	104-5329	1	Pin-Jackshaft
45	112-9854	1	Ring-Spiral, Retaining
46	112-9855	1	Gear-52T, Bull
47	112-9856	1	Washer
48	112-9857	1	Bearing-Sleeve
49	120-7104	1	Shaft-Axle
50	112-9859	1	Bushing-Axle
51	112-9860	1	Seal-Lip
52	106-8686	1	Seal Kit
53	106-8697	1	Expansion Plate Kit
54	135-7349	1	Fan And Pulley Kit
54:1	116-9714	1	Nut-HJ
54:2	116-9708	1	Washer-Slotted
54:4	135-7364	1	Fan 7.0 X 10 Blade
55	106-8688	1	Brake Arm Kit
57	112-9862	1	Center Section Filter Kit
58	104-2147	1	Sealant
59	107-2489	1	Bypass Arm Kit
61	114-1634	1	Filter Kit
98	120-7109	1	Tube-Axle
100	106-8694	1	Disc-Brake, Cog
101	115-5057	1	Cover-Nut, Axle
124	109-5939	1	Hub Kit
138	112-9866	1	Breather Kit
139	114-1635	1	Breather ASM
200	117-5362	1	Control Arm Kit
209	114-8467	1	Puller-Hub, 4 Bolt

Brake Assembly

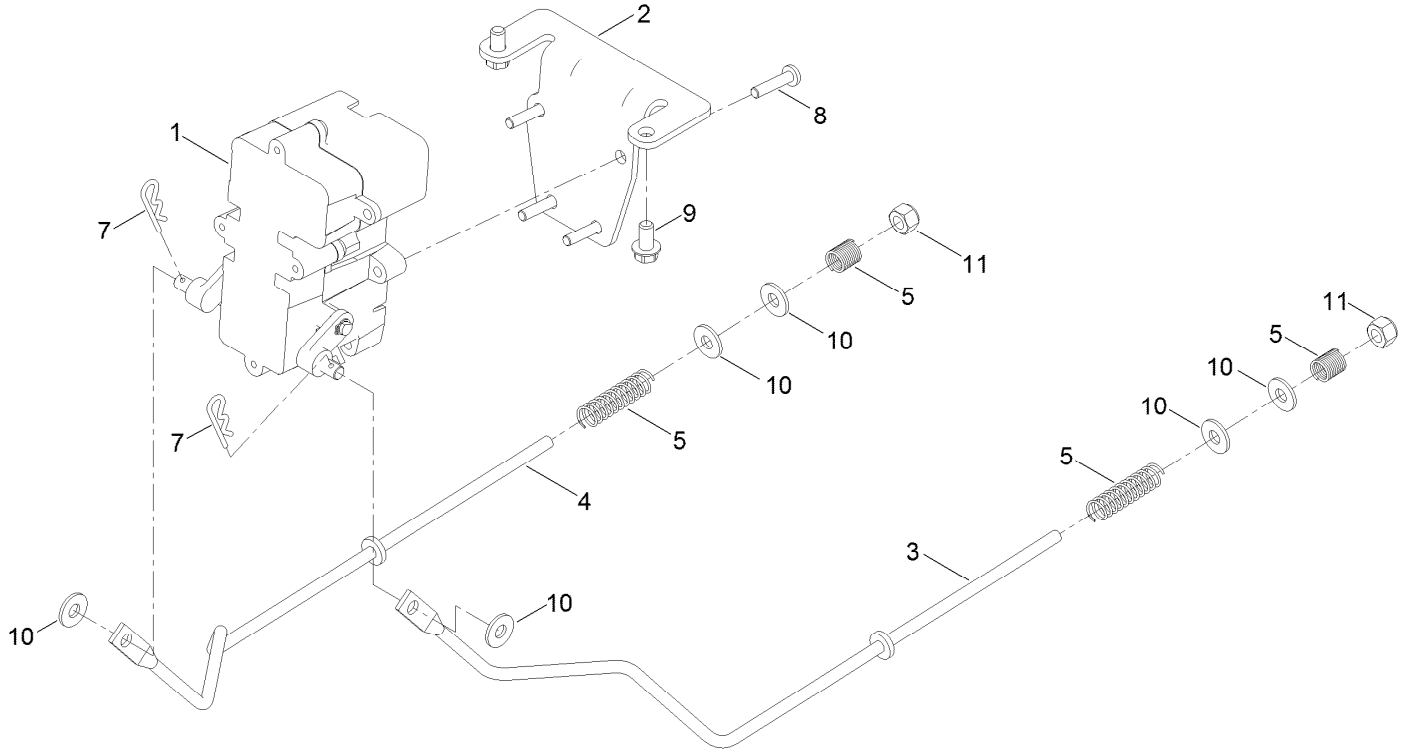

Brake Assembly (continued)

Ref.	Part Number	Qty.	Description
1	138-2514	1	Brake Box ASM
2	133-9284-03	1	Bracket-Mount, Brake
3	138-2591	1	Rod-Brake, LH
4	138-2592	1	Rod-Brake, RH
5	117-1169	4	Spring-Compression
7	137-3083	2	Pin-Hair
8	32144-36	4	Screw-PPH
9	32144-4	2	Screw-HWH
10	119-8952	6	Washer
11	137-3088	2	Nut-Hex

Rear Tire Assembly

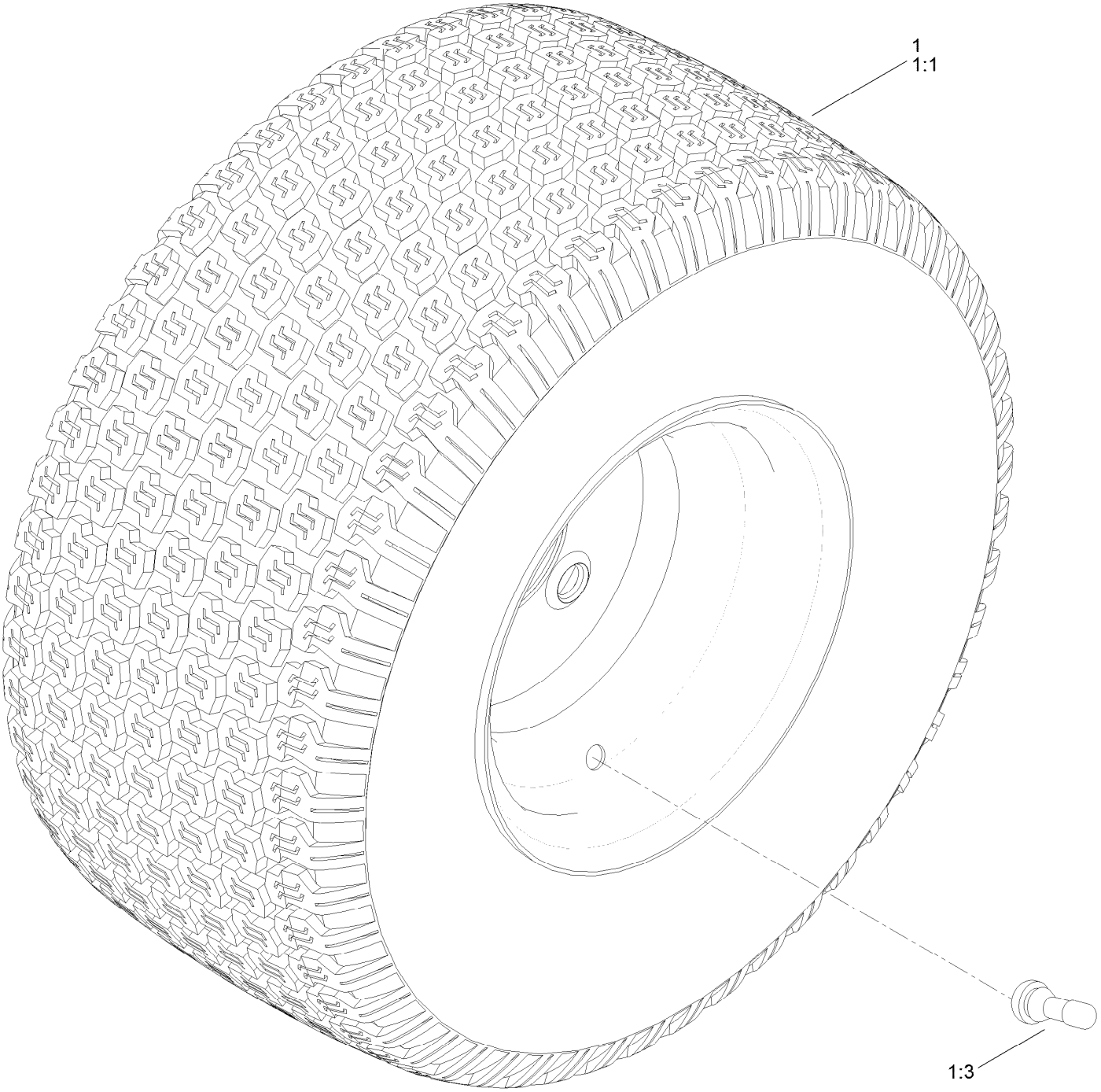

Rear Tire Assembly (continued)

Ref.	Part Number	Qty.	Description
1	139-5847	2	Tire ASM
1:1	140-2731	1	Tire
1:3	232-27	1	Stem-Valve
1:99	232-37	1	Tube ●

● Not illustrated

Motion Control Assembly

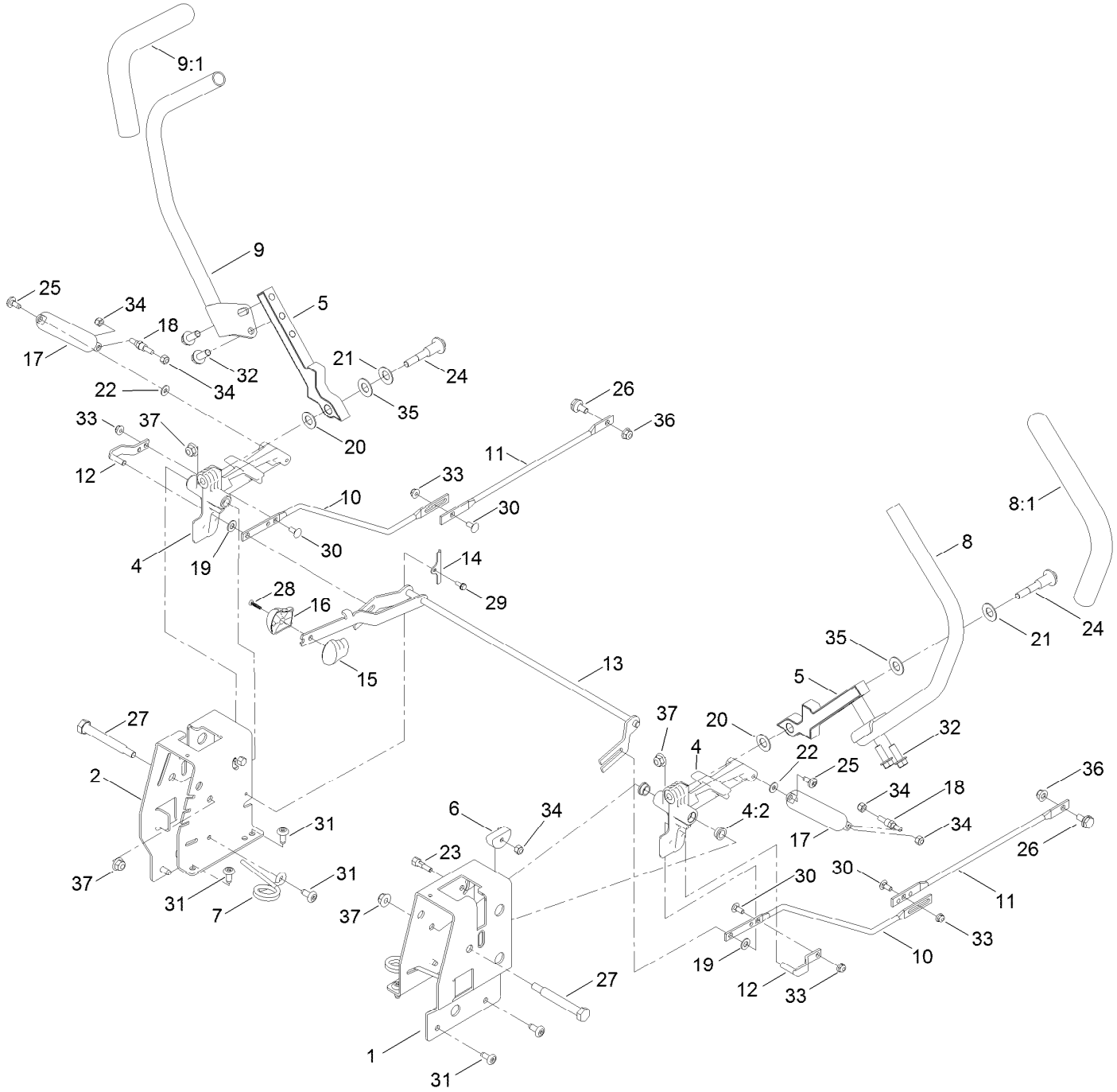

Motion Control Assembly (continued)

Ref.	Part Number	Qty.	Description
1	138-7598-03	1	Plate-Control Box, LH
2	138-7599-03	1	Plate-Control Box, RH
4	119-3470	2	Actuator Arm ASM
4:2	256-156	2	Bushing-Flange
5	133-9299-05	2	Arm-Control
6	139-5803	2	Eccentric
7	138-7539	2	Spring-Torsion
8	133-7055	1	Handle-Control, LH
8:1	121-0726	1	Grip
9	133-7057	1	Handle-Control, RH
9:1	121-0726	1	Grip
10	138-2580	2	Rod-Hydro, Front
11	138-2579	2	Rod-Hydro, Rear
12	121-1753	2	Pin-Rod, Hydro
13	138-9750	1	Speed Control ASM
14	138-7541	2	Plate-Retainer
15	132-9368	1	Knob-RH
16	132-9369	1	Knob-LH
17	132-6853	2	Damper-Non Cavitating
18	138-7215	2	Stud-Damper

Ref.	Part Number	Qty.	Description
19	93-6079	2	Spacer-Nylon
20	120-2273	2	Washer-Nylon
21	119-8925	2	Washer-Belleville
22	119-8952	2	Washer
23	139-5811	2	Bolt-Pivot, Eccentric
24	139-2556	2	Bolt-Pivot
25	120-7950	2	Screw-Torx
26	37-8771	2	Bolt-Shoulder, HF
27	115-5099	2	Bolt-Pivot
28	94-4496	1	Screw-PPH
29	139-1713	2	Screw-Taptite
30	100-1445	4	Bolt-CARR
31	138-9753	10	Screw
32	139-2597	4	Screw-HHF
33	137-3005	4	Nut-HF
34	137-3088	6	Nut-Hex
35	117-1240	2	Washer
36	119-4041	2	Nut-HF
37	104-8301	4	Nut-HF, NI

Engine and Muffler Assembly

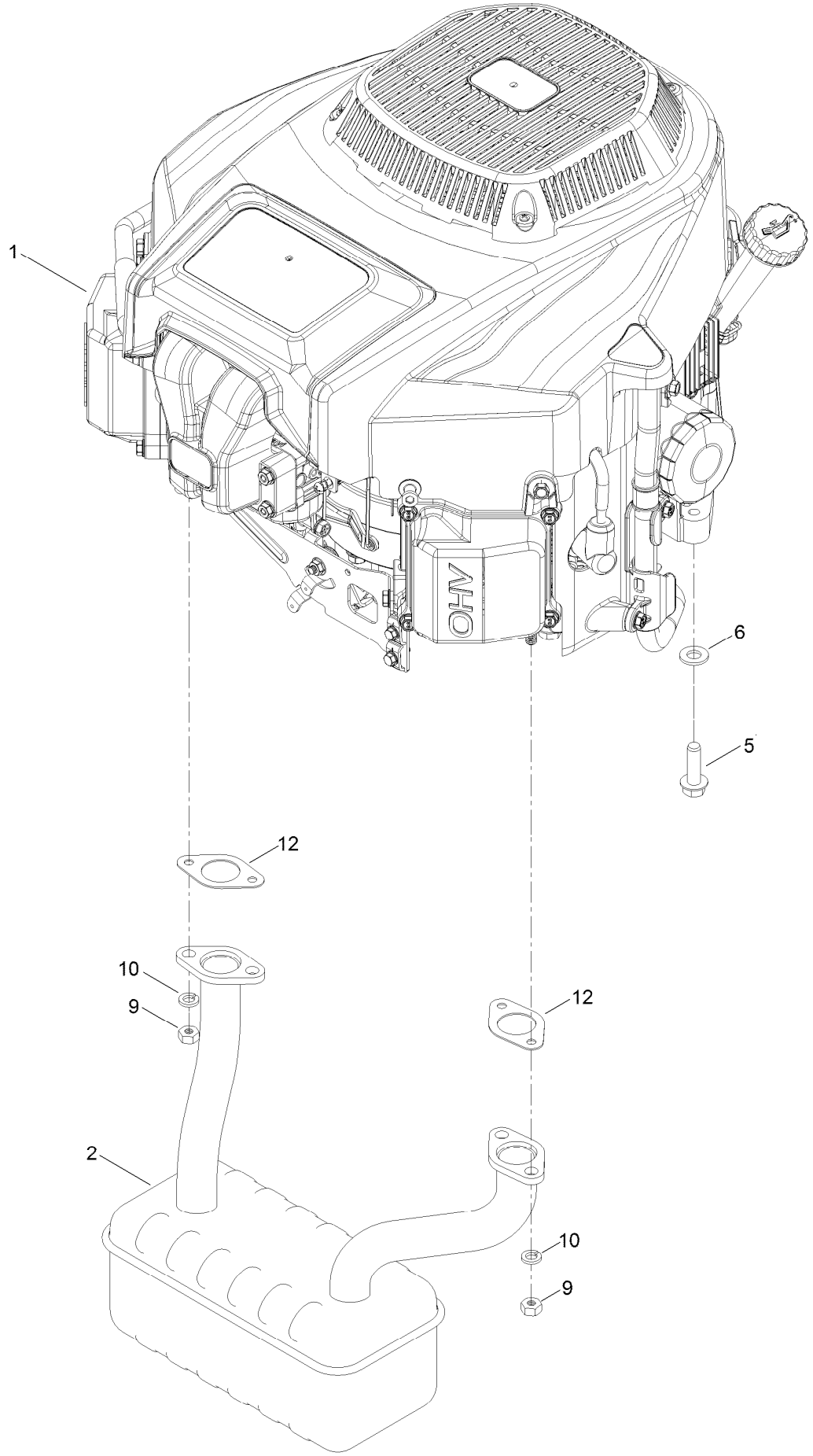

Engine and Muffler Assembly (continued)

Ref.	Part Number	Qty.	Description
1	139-0603	1	Engine-2P77F
2	139-5865	1	Muffler
5	139-2576	4	Screw-HWH
6	115-1166	3	Washer-Flat
9	121-0199	4	Nut-HH
10	127-9279	4	Washer-Lock, Split
12	120-4317	2	Gasket-Exhaust

Fuel System Assembly with Non-Canister Style Air Filter

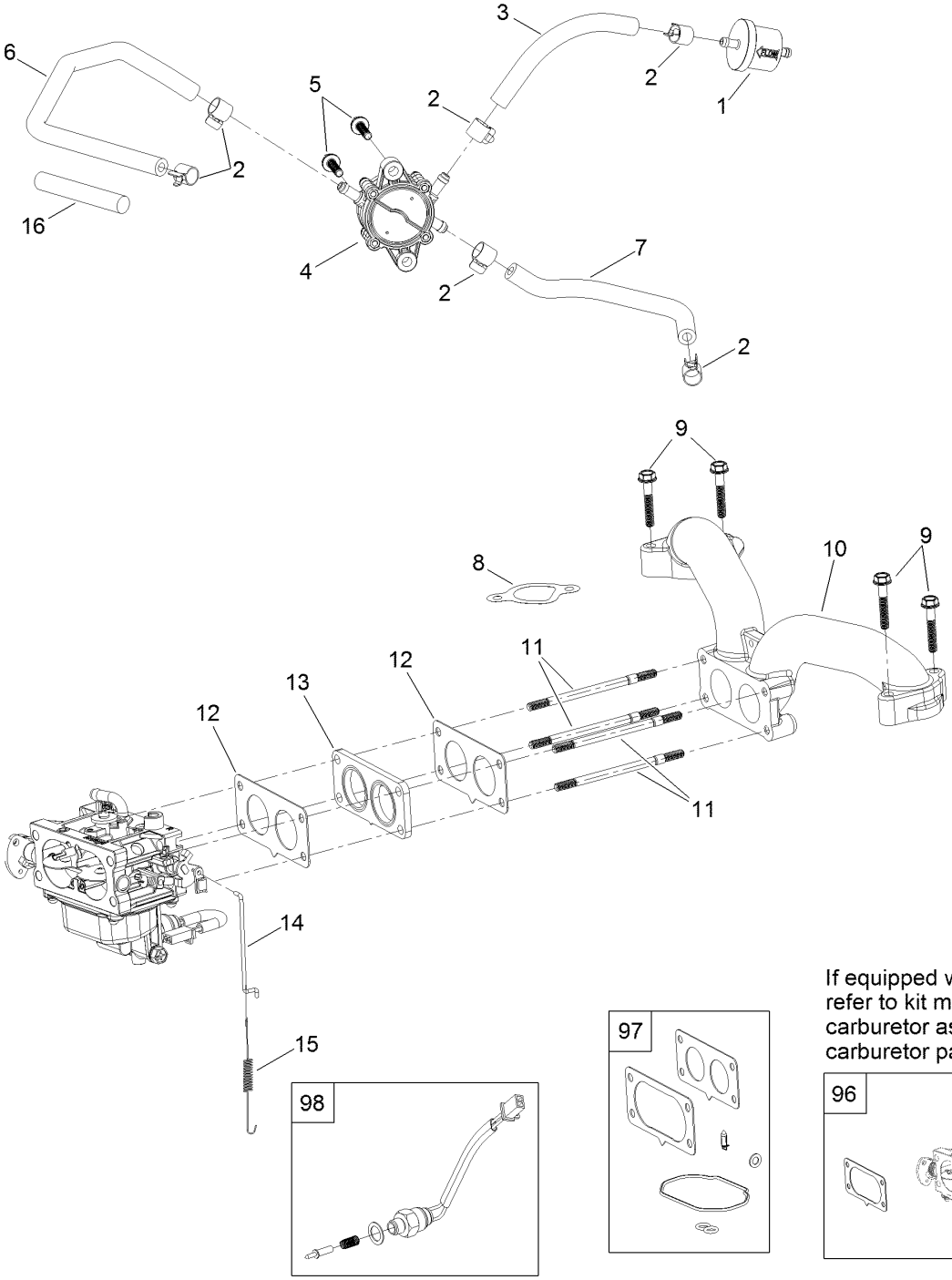

If equipped with canister type air filter refer to kit model 135-6195 for carburetor assembly and internal carburetor parts.

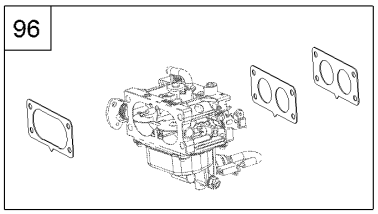

Fuel System Assembly with Non-Canister Style Air Filter (continued)

Ref.	Part Number	Qty.	Description
1	133-1563	1	Filter-Fuel
2	120-4251	6	Clamp-Fuel Line
3	120-4371	1	Line-Fuel
4	127-9206	1	Pump-Fuel
5	120-4225	2	Screw-HHF
6	127-9205	1	Hose-Fuel
7	127-9207	1	Hose-Fuel
8	127-9230	2	Gasket-Intake
9	120-4284	4	Screw-HHF
10	127-9244	1	Manifold-Intake
11	127-9245	4	Stud
12	127-9246	2	Gasket-Carburetor
13	127-9247	1	Insulator-Carburetor
14	133-9963	1	Linkage-Throttle
15	133-9964	1	Spring-Return, Throttle
16	127-9355	1	Sleeve-Fuel Line Protector
96	136-7840	1	Carburetor Replacement Kit
97	127-9290	1	Carburetor Repair Kit
98	127-9292	1	Solenoid Kit
99	136-7837	1	High Altitude Kit ●

● Not illustrated

Carburetor Assembly

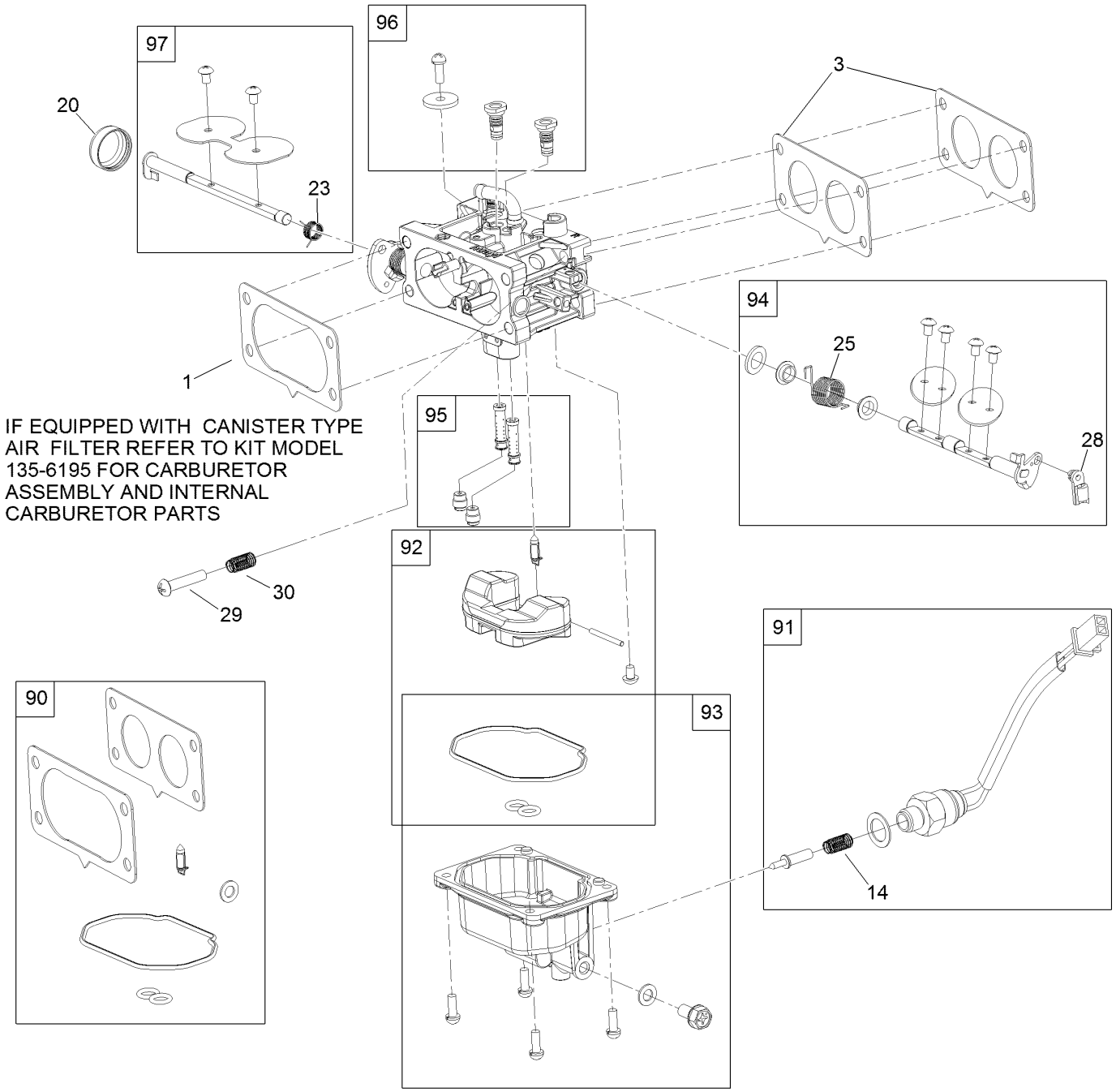

Carburetor Assembly (continued)

Ref.	Part Number	Qty.	Description
1	127-9251	1	Gasket-Carburetor
3	127-9246	2	Gasket-Carburetor
14	127-9319	1	Spring
20	127-9325	1	Cover-Shaft, Choke
23	127-9328	1	Spring
25	127-9330	1	Spring
28	127-9333	1	Clamp-Lock
29	127-9334	1	Screw-PPH
30	127-9335	1	Spring

Ref.	Part Number	Qty.	Description
90	127-9290	1	Carburetor Repair Kit
91	127-9292	1	Solenoid Kit
92	127-9340	1	Float Kit
93	127-9341	1	Bowl Kit
94	133-9817	1	Throttle Shaft Kit
95	136-7844	1	Nozzle And Jet Kit
96	136-7899	1	Idle Jet Kit
97	127-9345	1	Choke Shaft Kit

Air Intake and Filtration Assembly

IF EQUIPPED WITH CANISTER TYPE AIR FILTER
REFER TO KIT MODEL 135-6195 TO LOOK UP PARTS

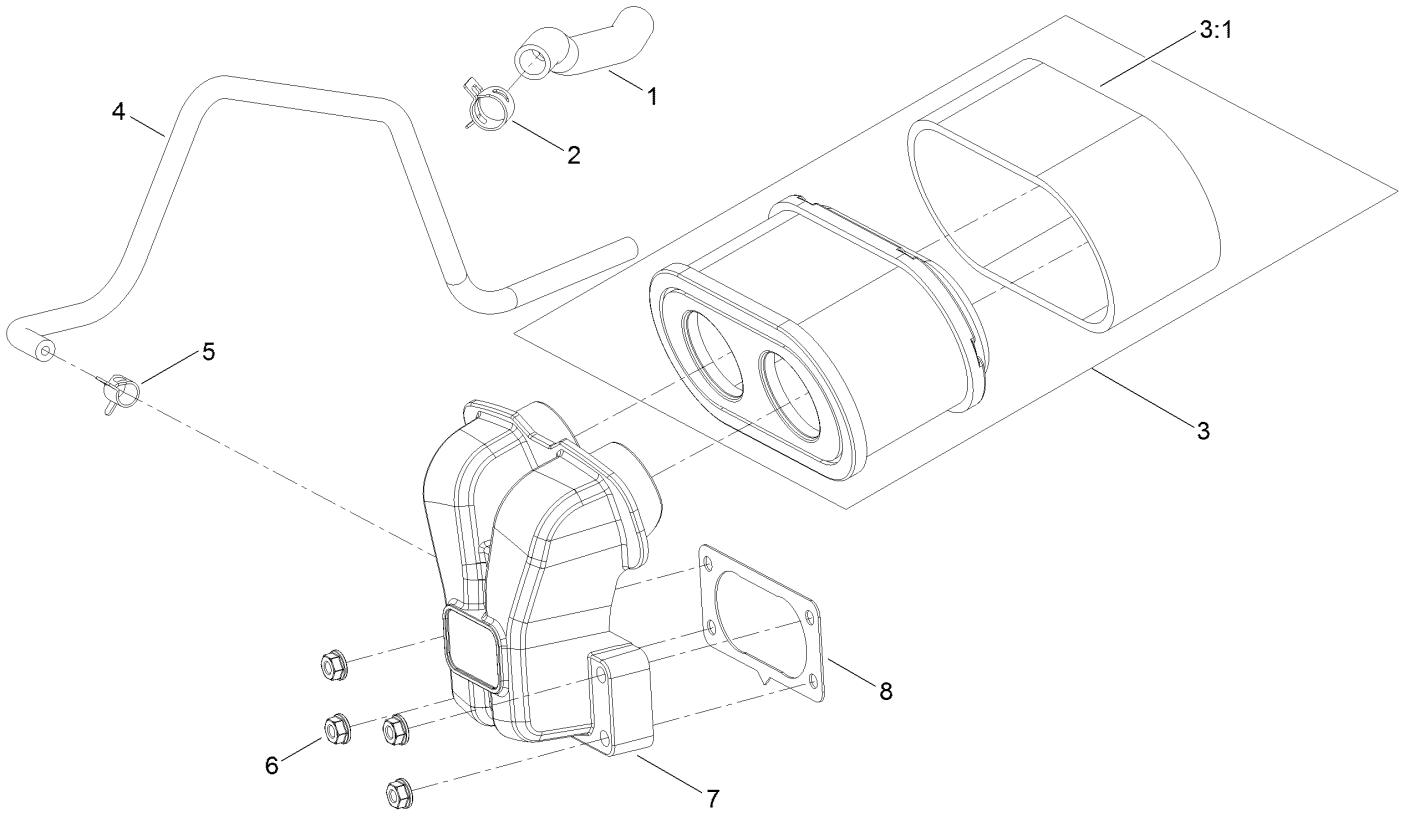

Air Intake and Filtration Assembly (continued)

Ref.	Part Number	Qty.	Description
1	127-9235	1	Tube-Breather
2	127-9234	2	Clamp-Hose
3	136-7806	1	Air Filter Kit
3:1	136-7804	1	Prefilter
4	127-9253	1	Hose-Fuel
5	127-9187	1	Clamp-Hose
6	120-4236	4	Nut-Flange
7	127-9047	1	Manifold-Filter, Air
8	127-9251	1	Gasket-Carburetor

Ignition and Cooling Fan

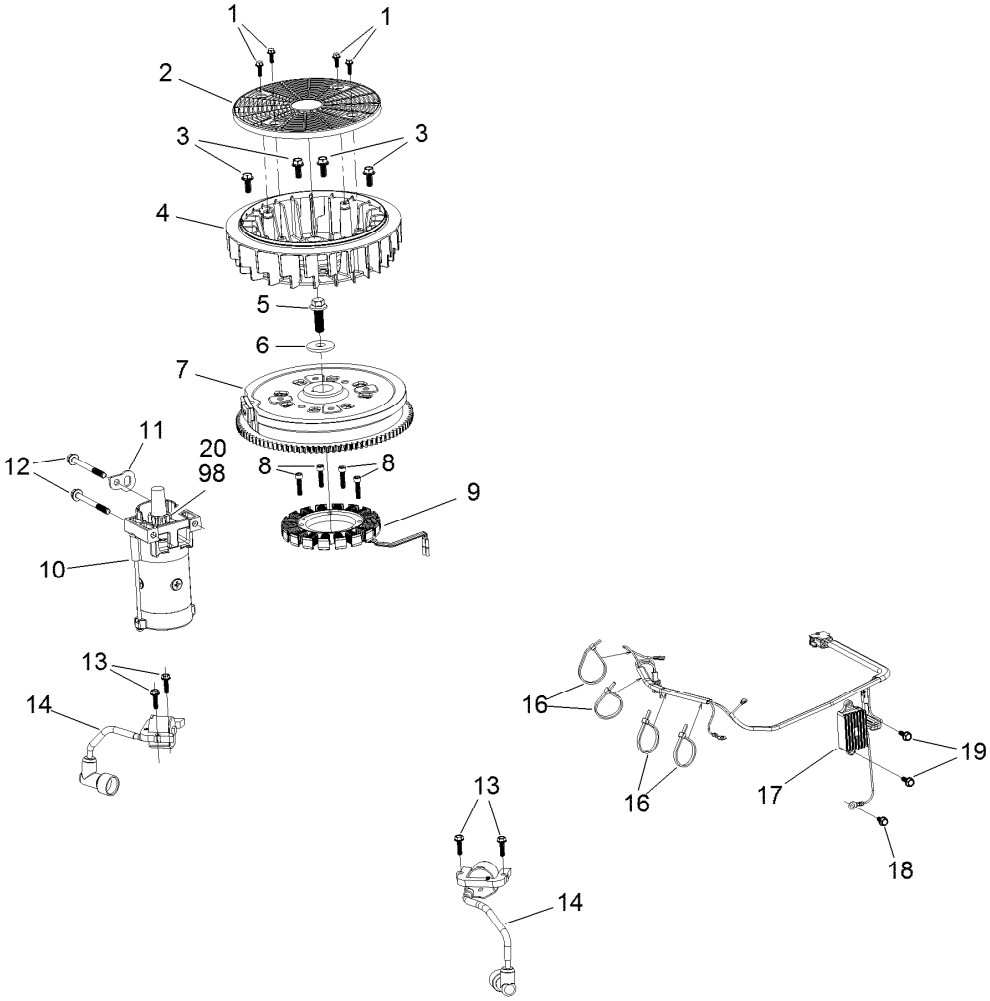

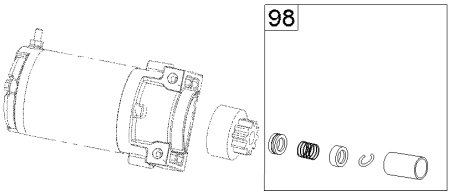

Ignition and Cooling Fan (continued)

Ref.	Part Number	Qty.	Description
1	127-9197	4	Screw-HWH
2	127-9198	1	Screen-Rotating
3	127-9199	4	Screw-HWH
4	127-9200	1	Fan-Cooling
5	127-9201	1	Screw-HWH
6	127-9202	1	Washer-Spring
7	127-9306	1	Flywheel
8	127-9210	4	Screw-HSH
9	136-7876	1	Alternator
10	136-7880	1	Motor-Starter
11	127-9208	1	Bracket-Lift
12	120-4231	2	Screw-HHF
13	121-0007	4	Bolt-Flange
14	136-7883	2	Ignition Coil ASM
16	127-9220	4	Tie-Zip
17	136-7879	1	Regulator-Voltage, W/Harness
18	120-4216	1	Screw-HHF
19	120-4232	2	Screw-HHF
20	133-1562	1	Pinion-Starter
98	133-1566	1	Starter Repair Kit

Crankcase and Crankshaft Assembly

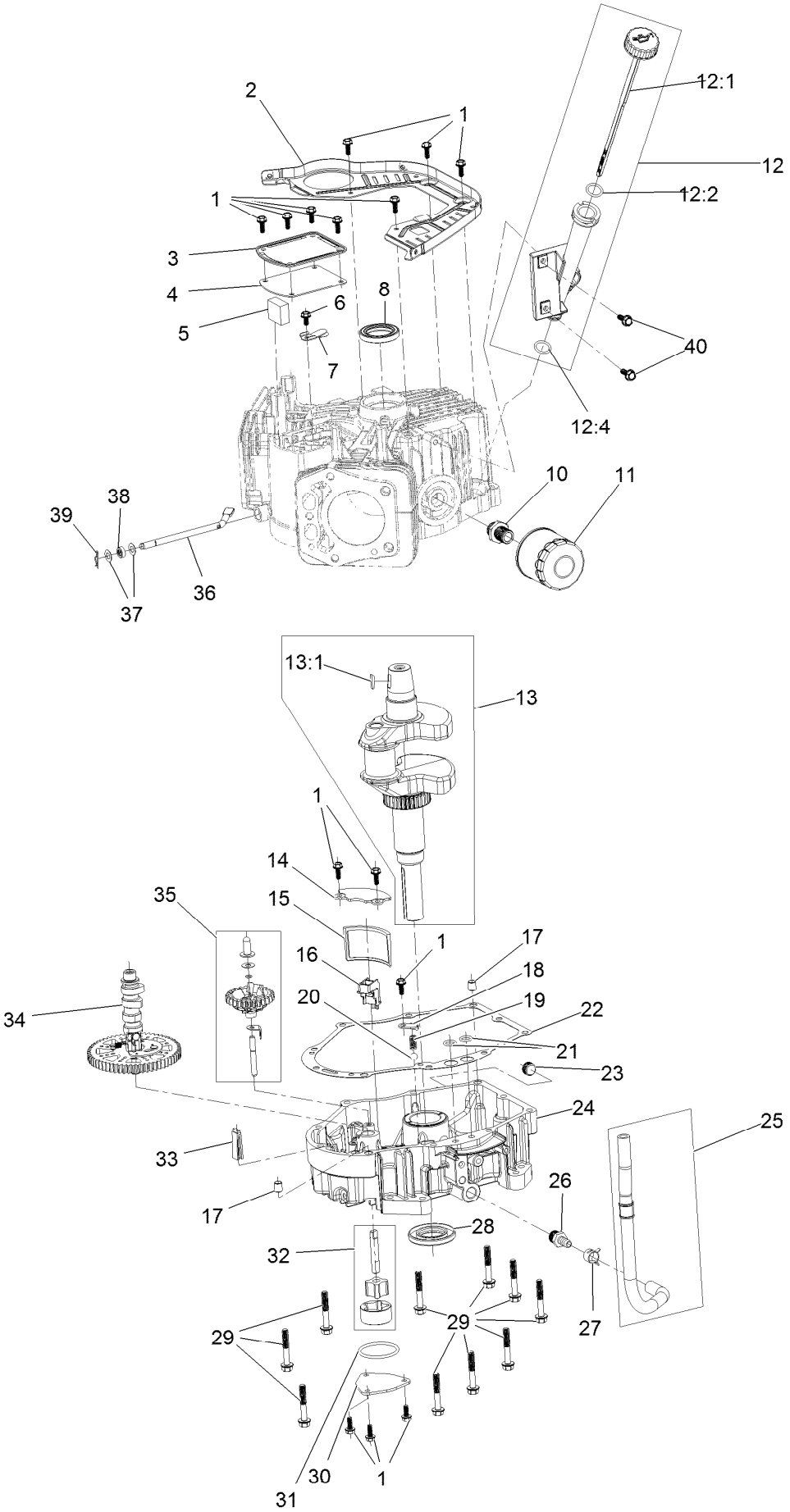

Crankcase and Crankshaft Assembly (continued)

Ref.	Part Number	Qty.	Description
1	120-4232	14	Screw-HHF
2	127-9212	1	Baffle
3	127-9213	1	Cover-Breather
4	127-9214	1	Gasket-Breather
5	127-9215	1	Filter-Breather
6	120-4216	1	Screw-HHF
7	127-9217	1	Valve-Breather
8	120-4267	1	Seal-Oil
10	136-7884	1	Adaptor-Filter, Oil
11	136-7848	1	Filter-Oil
12	127-9218	1	Oil Tube ASM
12:1	127-9283	1	Dipstick
12:2	127-9284	1	O-Ring
12:4	127-9286	1	O-Ring
13	127-9255	1	Crankshaft
13:1	120-4320	1	Key-Woodruff
14	127-9261	1	Cover-Screen, Oil
15	127-9262	1	Screen-Oil
16	127-9263	1	Retainer-Screen
17	120-4274	2	Pin-Dowel
18	127-9264	1	Plate-Retainer
19	127-9265	1	Spring
20	127-9266	1	Valve-Ball
21	120-4262	2	O-Ring
22	127-9267	1	Gasket-Cover, Crankcase
23	133-9805	1	Plug-Drain
24	133-9806	1	Cover-Crankcase
25	127-9293	1	Oil Drain Hose ASM
26	127-9275	1	Fitting-Hose
27	127-9276	1	Clamp-Hose
28	127-9271	1	Seal
29	121-0473	10	Screw-HHF
30	127-9274	1	Cover-Oil Pump
31	127-9273	1	O-Ring
32	127-9272	1	Oil Pump ASM
33	120-4275	1	Deflector-Oil, Rubber
34	133-1568	1	Camshaft
35	136-7882	1	Governor ASM
36	127-9238	1	Shaft-Governor
37	120-4258	2	Washer-Plain
38	120-4257	1	Seal-Oil
39	120-4256	1	Pin-Hair
40	120-4232	2	Screw-HHF

Governor Control Assembly

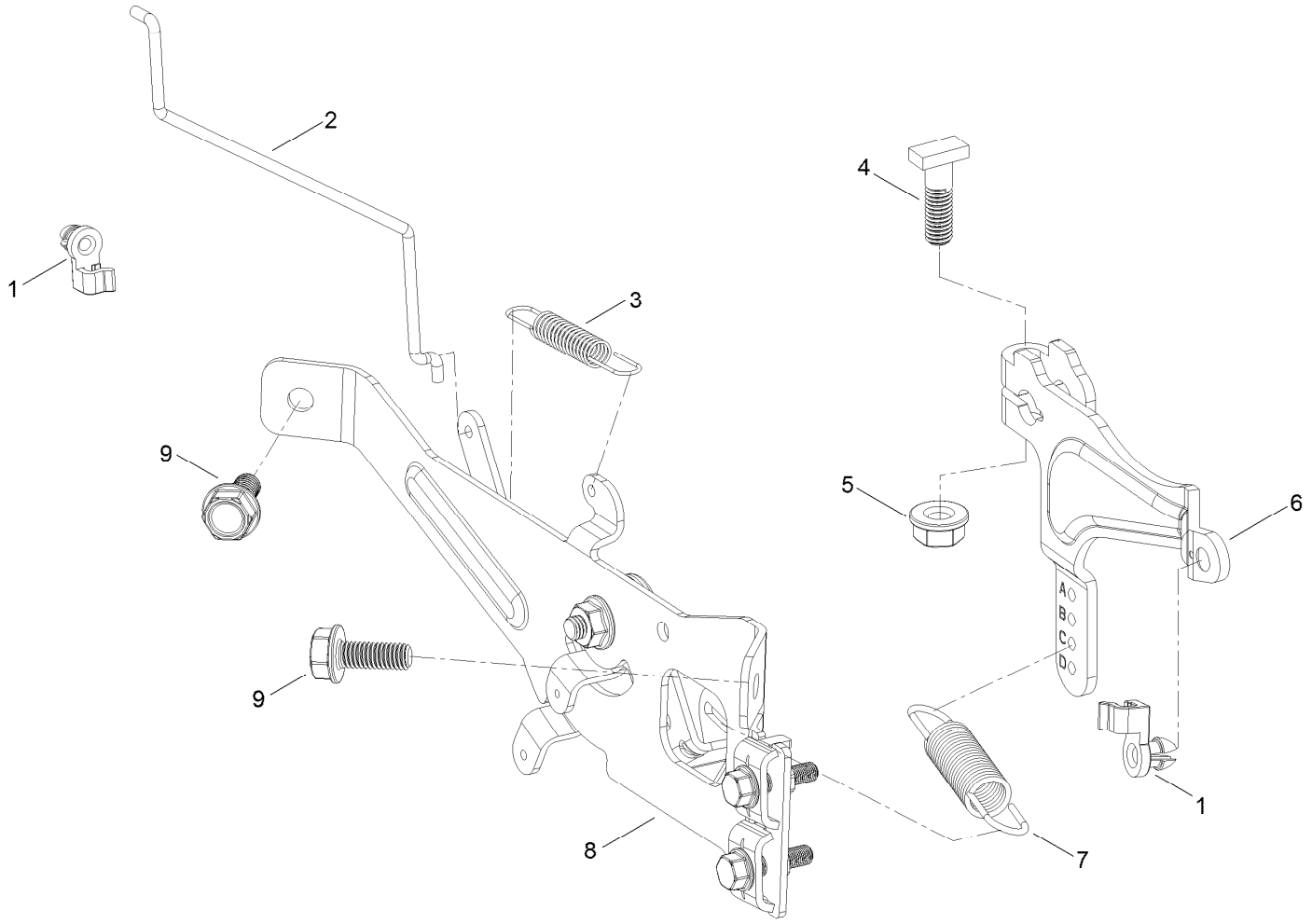

Governor Control Assembly (continued)

Ref.	Part Number	Qty.	Description
1	127-9250	2	Clip-Linkage
2	127-9242	1	Linkage-Choke
3	127-9241	1	Spring-Governor
4	120-4238	1	Bolt-Arm, Governor
5	120-4236	1	Nut-Flange
6	133-9961	1	Arm-Governor
7	133-9962	1	Spring-Governor
8	133-1570	1	Control Plate ASM
9	120-4232	2	Screw-HHF

Piston and Cylinder Head Assembly

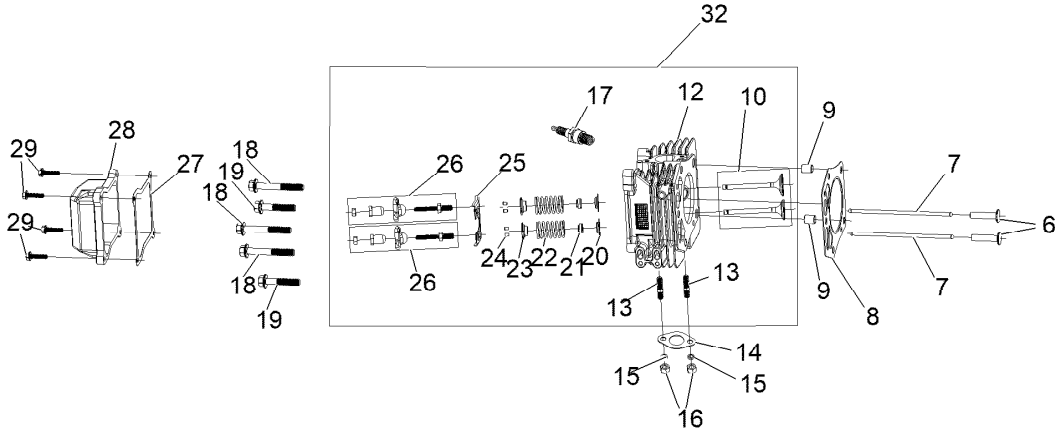

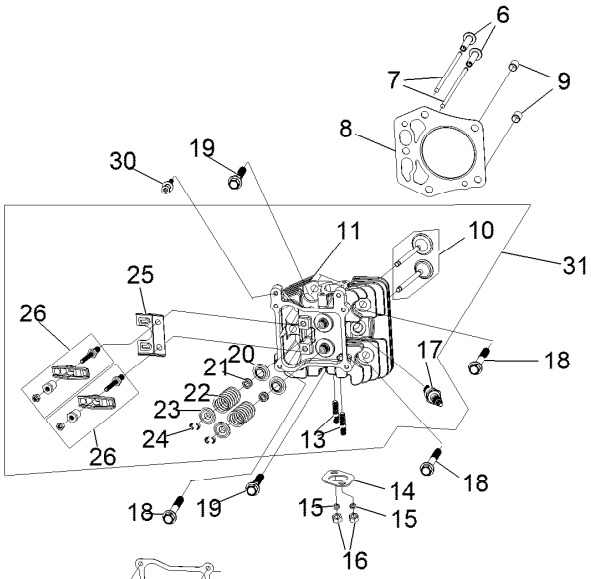

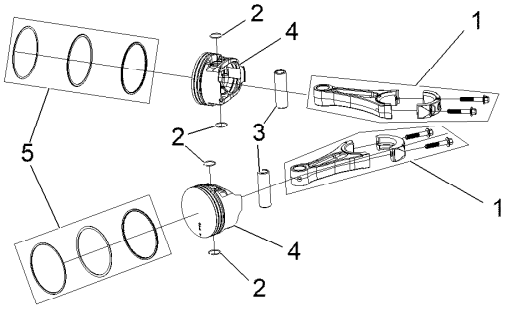

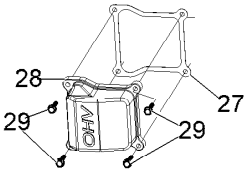

Piston and Cylinder Head Assembly (continued)

Ref.	Part Number	Qty.	Description
1	127-9256	2	Connecting Rod ASM
2	127-9258	4	Clip-Pin, Piston
3	127-9257	2	Pin-Piston
4	127-9259	2	Piston
5	127-9260	2	Piston Ring Set
6	127-9224	4	Lifter-Valve
7	127-9225	4	Rod-Push
8	127-9226	2	Gasket-Head, Cylinder
9	127-9227	4	Pin-Dowel
10	127-9228	2	Valve Set
11	133-9802	1	Head-Cylinder, Right
12	133-9804	1	Head-Cylinder, Left
13	121-0464	4	Stud-Exhaust
14	120-4317	2	Gasket-Exhaust
15	127-9279	4	Washer-Lock, Split
16	121-0199	4	Nut-HH
17	81-3250	2	Spark Plug
18	127-9231	6	Screw-HWH
19	127-9232	4	Screw-HWH
20	120-4303	4	Seat-Spring, Valve
21	120-4304	4	Seal-Stem, Valve
22	120-4305	4	Spring-Valve
23	120-4306	4	Retainer-Spring, Valve
24	120-4307	8	Keeper-Valve
25	127-9233	2	Plate-Guide, Push Rod
26	136-7881	4	Rocker Arm ASM
27	127-9295	2	Gasket-Valve Cover
28	127-9050	2	Cover-Valve
29	120-4225	8	Screw-HHF
30	120-4214	1	Screw-Shoulder, HH
31	136-7891	1	Complete Right Head ASM
32	136-7892	1	Complete Left Head ASM

Blower Housing Assembly

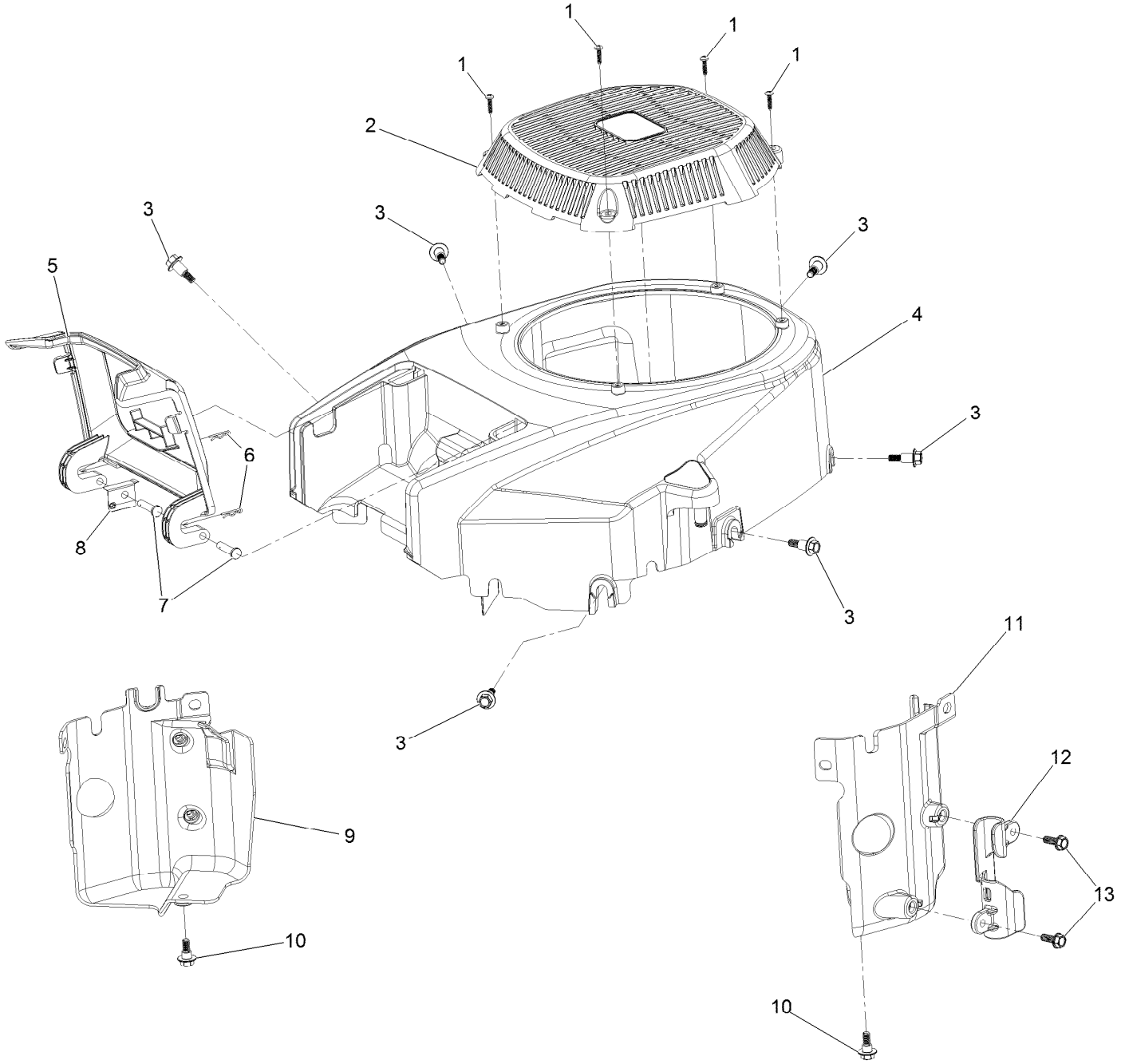

Blower Housing Assembly (continued)

Ref.	Part Number	Qty.	Description
1	133-1571	4	Screw-PPH, Plastic
2	127-9045	1	Cover-Fan
3	127-9196	6	Screw-Shoulder, HWH
4	133-1572	1	Shroud-Engine
5	127-9046	1	Door-Filter, Air
6	127-9280	2	Pin-Hair
7	127-9282	2	Pin
8	127-9281	1	Plate-Spring
9	136-7877	1	Baffle-Air, Left
10	120-4210	2	Screw-Shoulder, HHF
11	136-7878	1	Baffle-Air, Right
12	127-9287	1	Cleat-Hose
13	120-4232	2	Screw-HHF

Gasket and Seal Kit

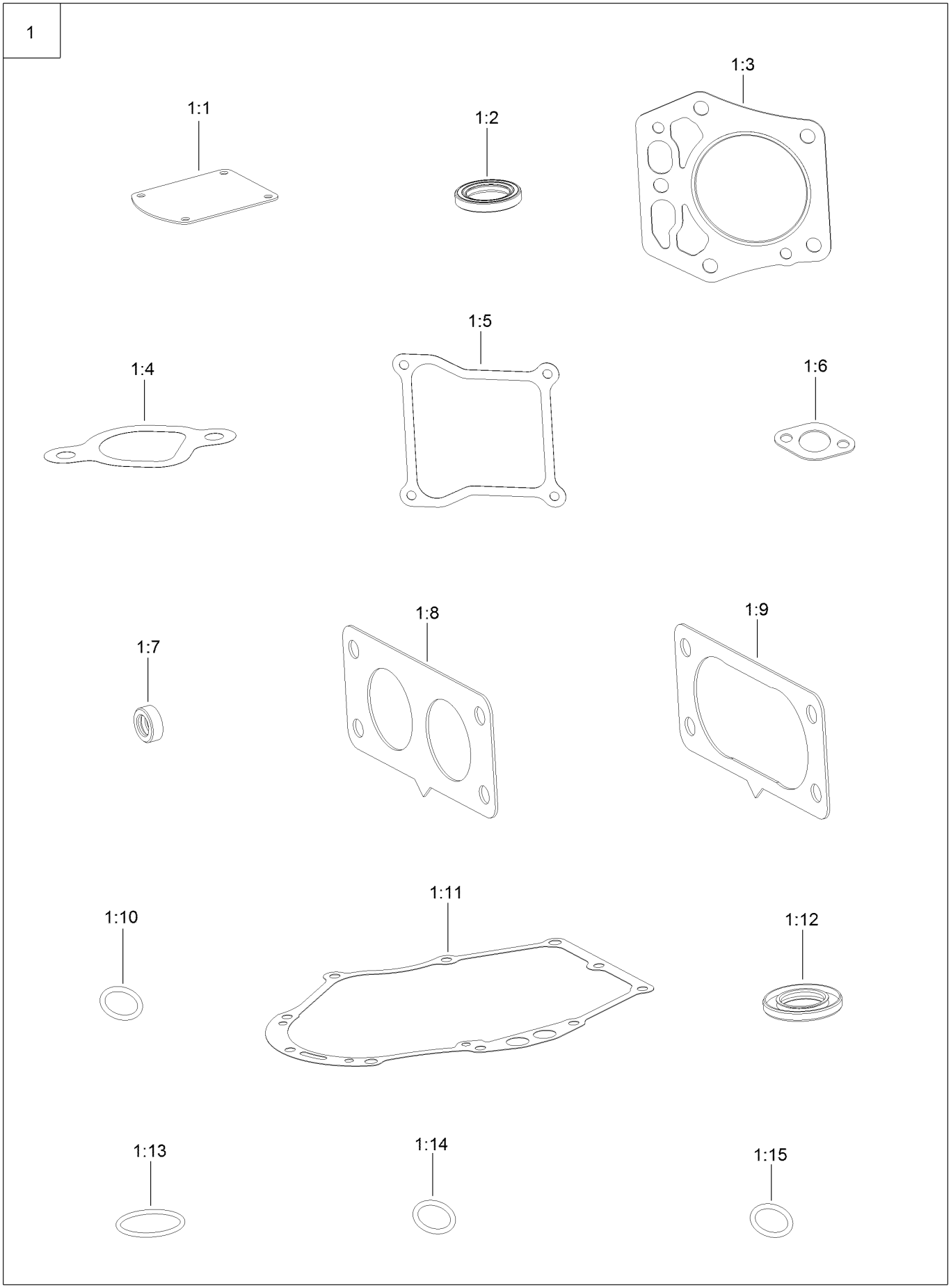

Gasket and Seal Kit (continued)

Ref.	Part Number	Qty.	Description
1	127-9296	1	Gasket And Seal Kit
1:1	127-9214	1	Gasket-Breather
1:2	120-4267	1	Seal-Oil
1:3	127-9226	2	Gasket-Head, Cylinder
1:4	127-9230	2	Gasket-Intake
1:5	127-9295	2	Gasket-Valve Cover
1:6	120-4317	2	Gasket-Exhaust
1:7	120-4257	1	Seal-Oil
1:8	127-9246	2	Gasket-Carburetor
1:9	127-9251	1	Gasket-Carburetor
1:10	120-4262	2	O-Ring
1:11	127-9267	1	Gasket-Cover, Crankcase
1:12	127-9271	1	Seal
1:13	127-9273	1	O-Ring
1:14	127-9284	1	O-Ring
1:15	127-9286	1	O-Ring

Body Styling and Fuel Pod Assembly

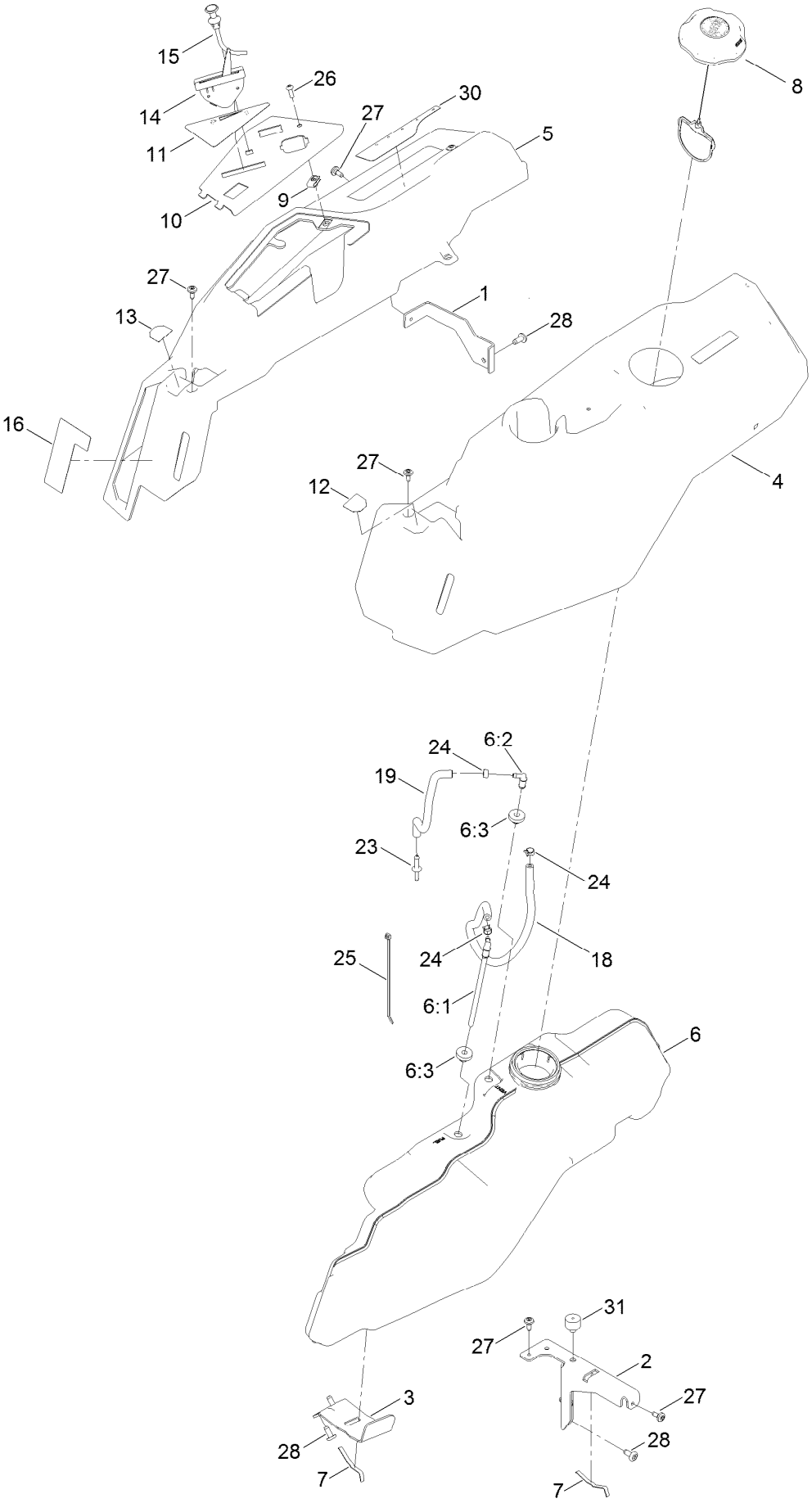

Body Styling and Fuel Pod Assembly (continued)

Ref.	Part Number	Qty.	Description
1	138-9810-03	1	Bracket-Pod
2	138-6071-03	1	Support-Pod, LH
3	139-3271-03	1	Support-Tank, Fuel
4	138-6074	1	Pod-LH
5	139-2404	1	Pod-RH, Myride
6	138-6072	1	Fuel Tank ASM
6:1	139-1091	1	Connector-Elbow, 90 DEG
6:2	117-7400	1	Fitting-Plastic
6:3	46-6560	2	Bushing
7	609830	2	Spring
8	137-4119	1	Cap-Fuel, Ratcheting
9	107069	1	Clip
10	139-2380-05	1	Panel-Control
11	139-2391	1	Decal-Panel, Control
12	139-2395	1	Decal-Control Lever, LH
13	139-2394	1	Decal-Control Lever, RH
14	139-2403	1	Cable-Throttle
15	139-2402	1	Cable-Choke
16	139-2388	1	Decal-Smart Speed
18	109-0298	1	Line-Fuel
19	110-3447	1	Hose-Fuel
23	117-5399	1	Adaptor-Orifice
24	2412-98	3	Clamp-Hose
25	614249	1	Tie-Cable
26	3258-166	1	Screw-PRH
27	120-7950	6	Screw-Torx
28	138-9753	5	Screw
30	139-2397	1	Decal-Adjustment
31	120-7893	1	Bumper-Grommet

Electrical Assembly

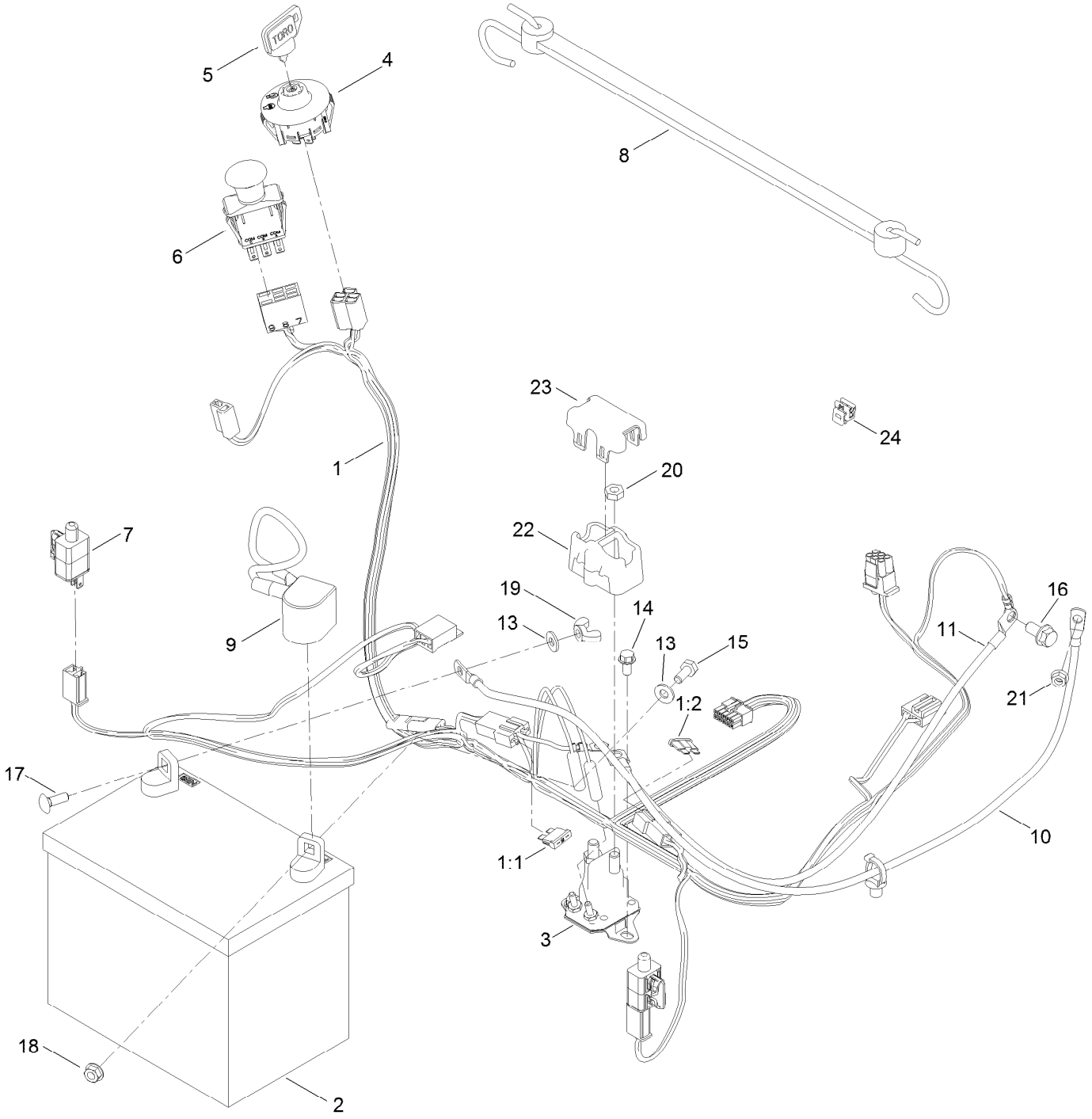

Electrical Assembly (continued)

Ref.	Part Number	Qty.	Description
1	138-2521	1	Harness-Wire
1:1	109355	1	Fuse-Blade, 15 Amp
1:2	109102	1	Fuse-Blade, 25 Amp
2	105-1692	1	Battery, 230CCA W/O Electrolyte
3	117-1197	1	Solenoid
4	137-4100	1	Switch-Ignition
5	63-8360	1	Key-Ignition
6	103-5221	1	Switch-PTO
7	110-6765	2	Switch
8	139-2381	1	Strap-Rubber
9	140-2713	1	Cable-Battery, Pos
10	139-2431	1	Cable-Battery, Red (8 Gauge)
11	110-6793	1	Cable-Battery, Black
13	120-9679	2	Washer-Flat
14	32144-4	2	Screw-HWH
15	137-3041	1	Screw-HH
16	139-2593	1	Screw-HHF
17	137-3053	1	Screw-CARR
18	139-2575	1	Nut-HF
19	32103-22	1	Nut-Wing
20	139-2580	2	Nut-HJ
21	139-2619	1	Nut-HF
22	140-2080	1	Cover-Solenoid
23	140-2081	1	Cap-Solenoid
24	32180-418	1	Clip-Harness

50 Inch Deck Assembly

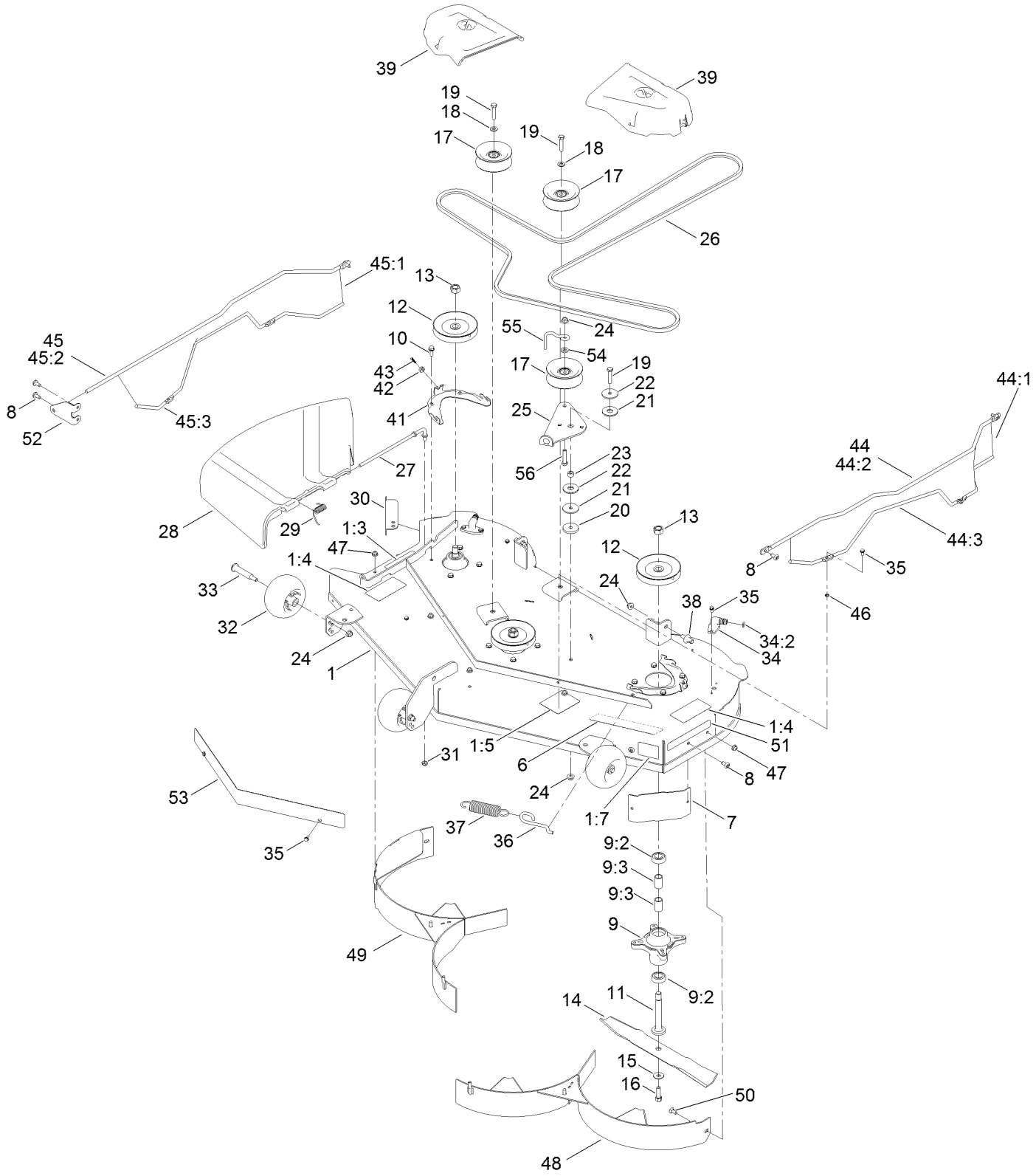

50 Inch Deck Assembly (continued)

Ref.	Part Number	Qty.	Description
1	138-9764	1	50 Inch Deck And Decal ASM
1:3	93-7009	1	Decal-Danger
1:4	132-0872	2	Decal-Danger, Deck
1:5	99-3943	1	Decal-Routing, Belt
1:7	112-9840	1	Decal-Scalp, Anti
6	139-3208	1	Decal-Deck
7	139-2448-03	1	Baffle-Corner
8	138-9753	7	Screw
9	139-3214	3	Spindle ASM
9:2	120-7935	2	Spacer
9:3	138-9770	2	Bearing-Ball
10	32144-41	12	Screw-Taptite
11	117-7268	3	Shaft-Spindle
12	139-7454	3	Pulley
13	139-2578	3	Nut-Hex
14	115-5062-03	3	Blade-Mulch, 17.50 Inch
15	3290-465	3	Washer-Belleville
16	26-0671	3	Screw-HH
17	132-9420	3	Pulley-Idler, Flat
18	115-1166	2	Washer-Flat
19	138-0722	3	Screw-HH
20	139-5802	1	Washer-Plain
21	139-1726	2	Washer-Rebound
22	114-0463	2	Washer-Friction, Composite
23	115-4986	1	Spacer
24	119-4042	7	Nut-HF, NI
25	138-7262	1	Arm-Idler
26	119-8820	1	V-Belt
27	137-2019	1	Rod-Pivot
28	138-7502	1	Deflector-Discharge
29	138-7268	1	Spring-Torsion
30	138-9800-03	1	Baffle-Cutoff
31	121-4600	1	Nut-Hex
32	1-603299	3	Roller-Scalp, Anti
33	139-2551	3	Bolt-Shoulder
34	133-9289	2	Fitting-Washout
34:2	133-9290	1	O-Ring
35	32144-4	10	Screw-HWH
36	138-7266	1	Spring-Return, Hook
37	138-7264	1	Spring-Extension
38	139-5871	2	Pin-Deck
39	139-3293	2	Cover-Belt
41	139-3272-03	2	Bracket-Cover, Belt
42	139-5886	2	Spacer-Notched
43	94-4496	2	Screw-PPH
44	140-0372	1	Left Guard ASM
44:1	140-0379	1	Guard
44:2	139-7468	1	Rod-Top, Left
44:3	139-7474	1	Rod-Support, Lower
45	140-0373	1	Right Guard ASM
45:1	140-0379	1	Guard
45:2	140-0385	1	Rod-Top, Right
45:3	139-7475	1	Rod-Support, Lower
46	1-803037	4	Nut-Retaining
47	119-4041	7	Nut-HF
48	139-3236-03	1	50In Baffle ASM
49	139-3234-03	1	50In Baffle ASM
50	139-2630	2	Bolt-CARR
51	119-2368	1	Decal-Recycler
52	140-2742-01	1	Plate-Mount, Guard
53	139-7485-03	1	Shield-Front
54	138-7207	1	Spacer-Hub, Blower
55	138-7270	1	Guide-Belt, Idler
56	139-2589	1	Screw-HH

Decal Assembly

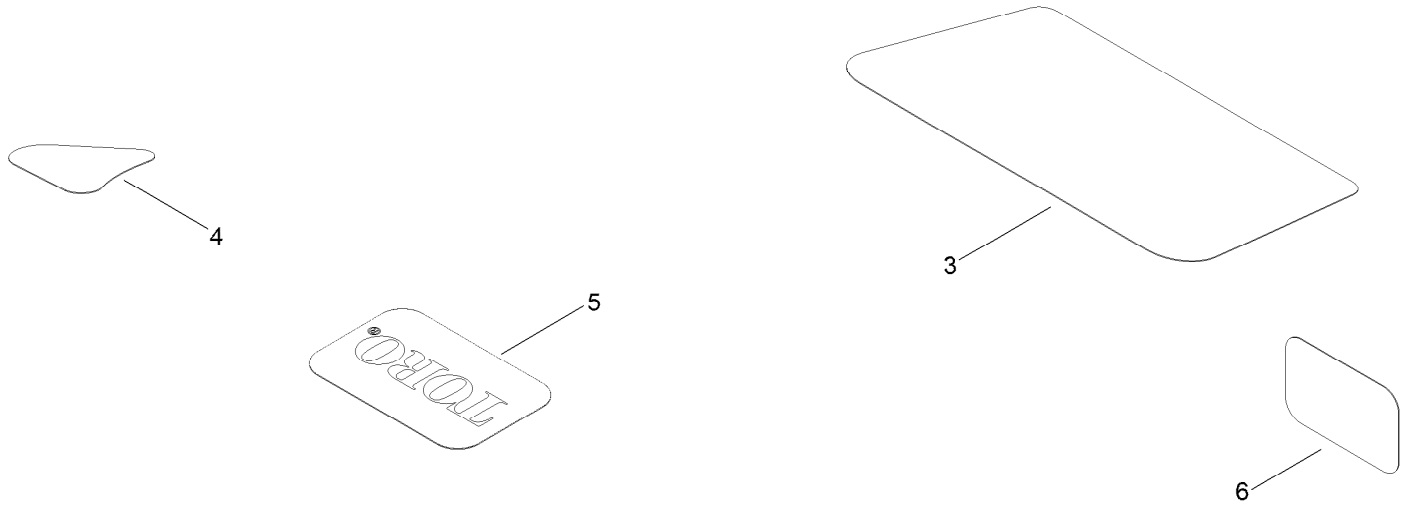

Decal Assembly (continued)

Ref.	Part Number	Qty.	Description
3	136-5597	1	Decal-Engine
4	131-1097	1	Decal-Drain, Oil
5	131-4157	1	Decal
6	127-9076	1	Placard-Intake

Seat Assembly

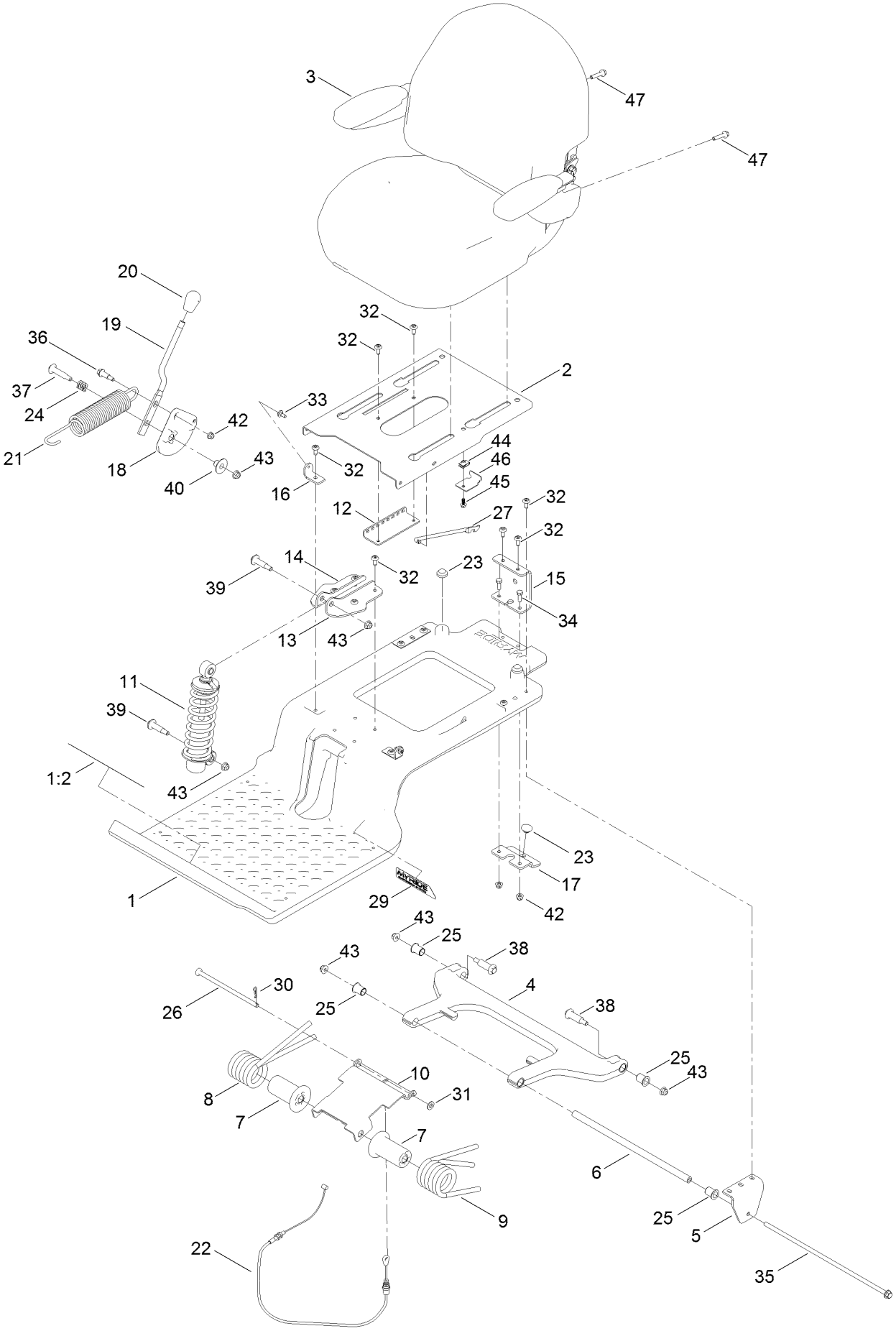

Seat Assembly (continued)

Ref.	Part Number	Qty.	Description
1	140-5046	1	Subframe ASM
1:2	132-0869	1	Decal-Danger
2	138-7540-03	1	Pan-Seat
3	140-5044	1	Seat ASM
4	138-2563	1	Arm, Swing
5	138-7517	2	Bracket-Mount, Swing Arm
6	138-7549	1	Tube-Spacer
7	138-9776	2	Retainer-Spring
8	137-7018	1	Spring-Torsion, RH
9	137-1983	1	Spring-Torsion, LH
10	138-7566-03	1	Plate-Adjuster
11	139-2427	1	Shock/Spring ASM
12	131-4008-03	1	Bracket-Latch, Seat
13	133-9318-03	1	Bracket-Shock Mount, Upper (LH)
14	133-9319-03	1	Bracket-Shock Mount, Upper (RH)
15	138-9788	1	Bracket-Cable
16	138-7522	2	Bracket-Seat
17	139-2361-03	1	Bracket Lower
18	138-9814	1	Pulley - Cam
19	138-9822	1	Lever - Adjustment
20	139-5807	1	Knob-Lever
21	138-9848	1	Spring-Extension
22	138-9812	1	Cable-Adjustment, Myride
23	135-0505	3	Bumper-Seat
24	139-5858	1	Spring-Compression
25	138-2573	4	Bushing-Flange
26	138-9813	1	Rod-Adjustment
27	138-2596	1	Rod-Prop, Seat
29	140-0357	1	Decal-Myride
30	137-3083	1	Pin-Hair
31	115-1166	1	Washer-Flat
32	138-9753	14	Screw
33	120-7950	2	Screw-Torx
34	139-1716	2	Screw-HH
35	138-7548	1	Screw-HHF
36	130-2344	1	Bolt-Shoulder
37	92-1057	1	Bolt-Shoulder
38	138-2547	2	Bolt-Shoulder
39	136-7198	2	Bolt-Shoulder
40	139-5800	1	Bushing - Flange
42	119-4041	3	Nut-HF
43	104-8301	6	Nut-HF, NI
44	107069	1	Clip
45	137-3111	1	Screw-HHF
46	138-7214	1	Bracket-Stop, Seat
47	140-5024	2	Screw-HHF

Seat Assembly No. 140-5044

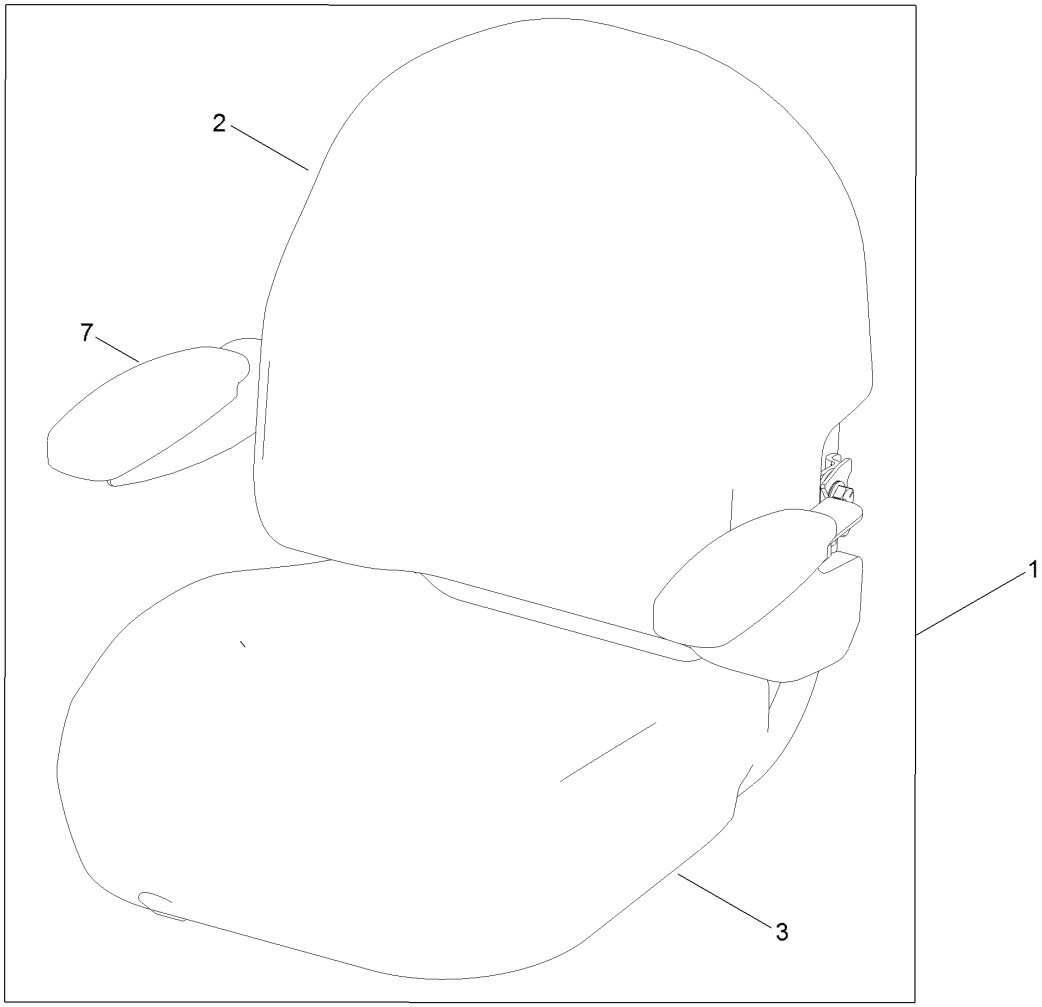

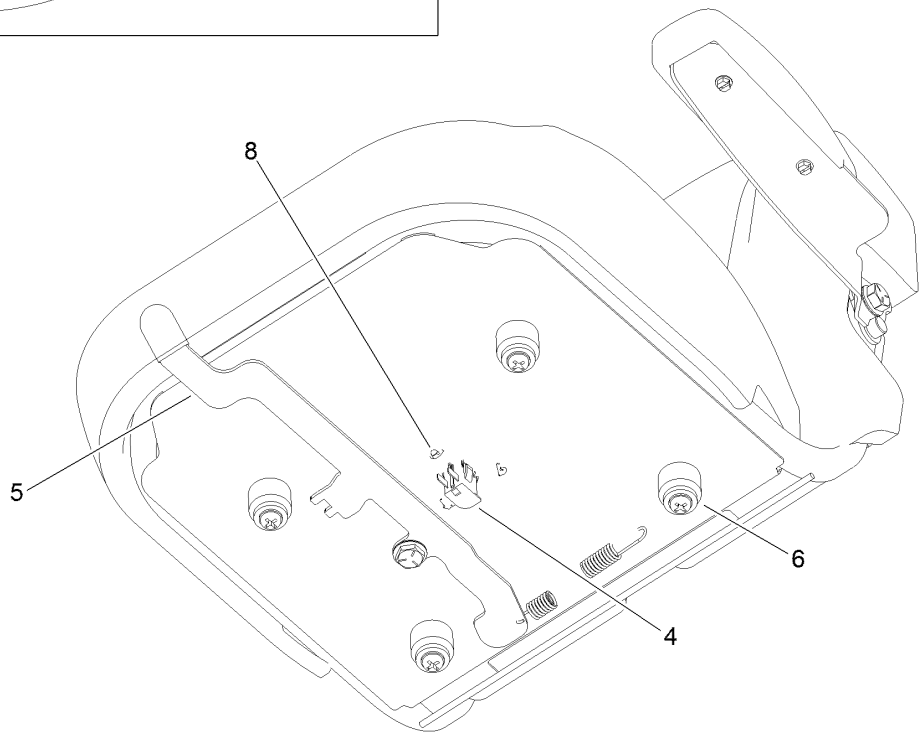

Seat Assembly No. 140-5044 (continued)

Ref.	Part Number	Qty.	Description
1	140-2733	1	Seat ASM
2	140-5041	1	Cover-Seat Back
3	140-5042	1	Cover-Seat Base
4	82-2190	1	Switch-Bail
5	131-4153	1	Track ASM
6	131-4154	1	Bushing ASM
7	139-5823	1	Arm Rest Kit
8	140-3468	1	Cap-Switch, Actuator

Clutch Assembly

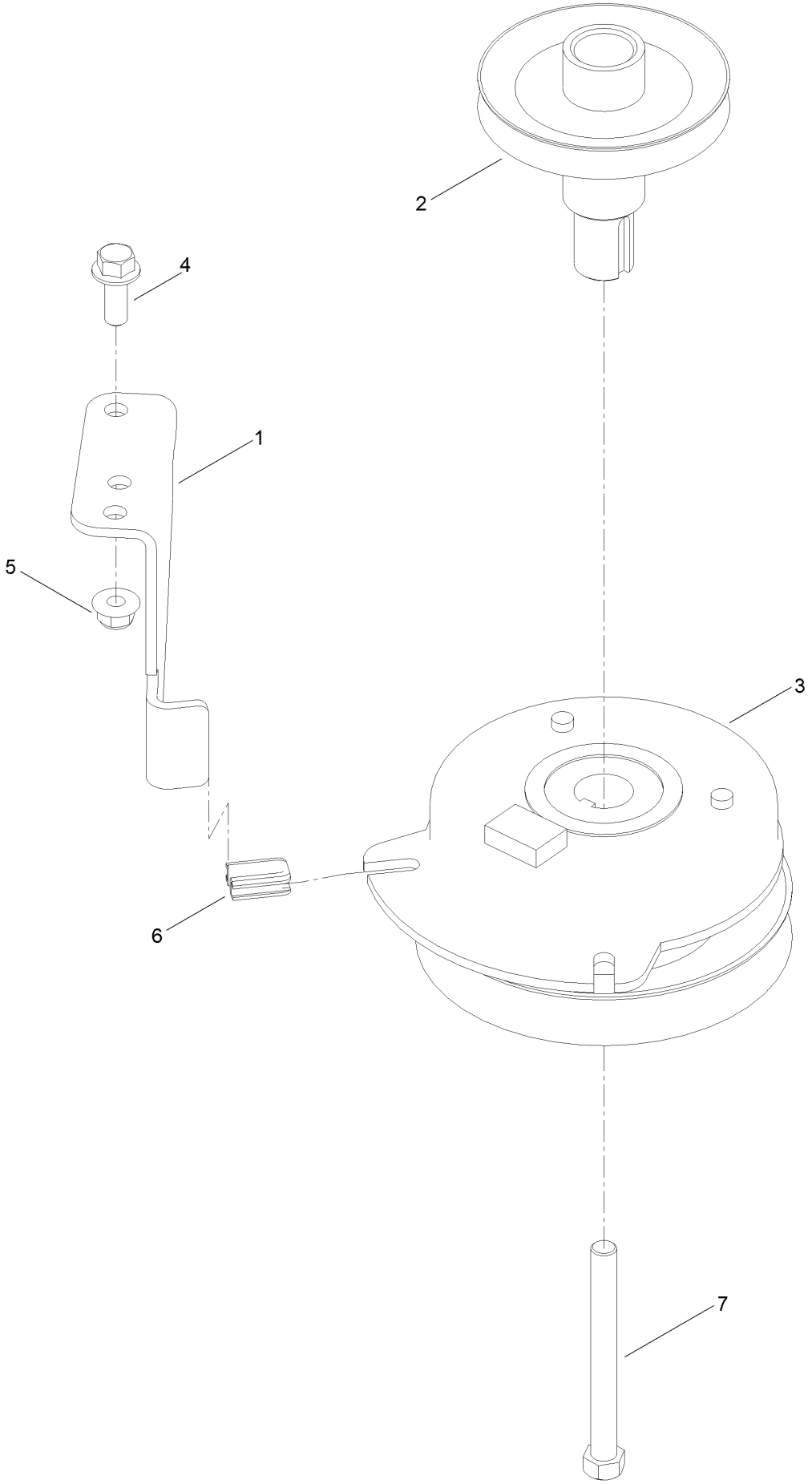

Clutch Assembly (continued)

Ref.	Part Number	Qty.	Description
1	137-7000	1	Stop-Clutch (Wide)
2	138-9792	1	Pulley-Engine
3	127-3408	1	Clutch-PTO
4	139-2597	1	Screw-HHF
5	119-4042	1	Nut-HF, NI
6	120-2217	1	Isolator-Clutch
7	139-2572	1	Screw-HH

Attachments and Accessories

For 74694 TimeCutter MX 5075T Riding Mower

Product Name	Model/Part
Hourmeter Kit	116-5461
Jack Kit	127-6666
50 Inch Recycler Kit	139-3240
50 Inch Bagging Enhancement Kit	139-7459
Front Weight Kit	140-2050
Assist Bar Kit	140-2052
Sunshade Kit	140-2054
LED Light Kit	140-2056
Floormat Kit	140-2060
Floormat Kit	140-2061
Jack Mount Kit	140-2711
Twin Bagger, Timecutter 50/54 Inch Fab.	79412
ROPS Kit	79485
Slope Sensor Kit	79486

Notes:

Notes:

Notes:

TORO®

Count on it.