FORM NO. 3311-269

TORO®

MODEL NO. 30825-80001 & UP
MODEL NO. 30515-80001 & UP

PARTS CATALOG

48" SNOWTHROWER WITH ADAPTER KIT
(GROUNDS MAINTENANCE TRACTOR)

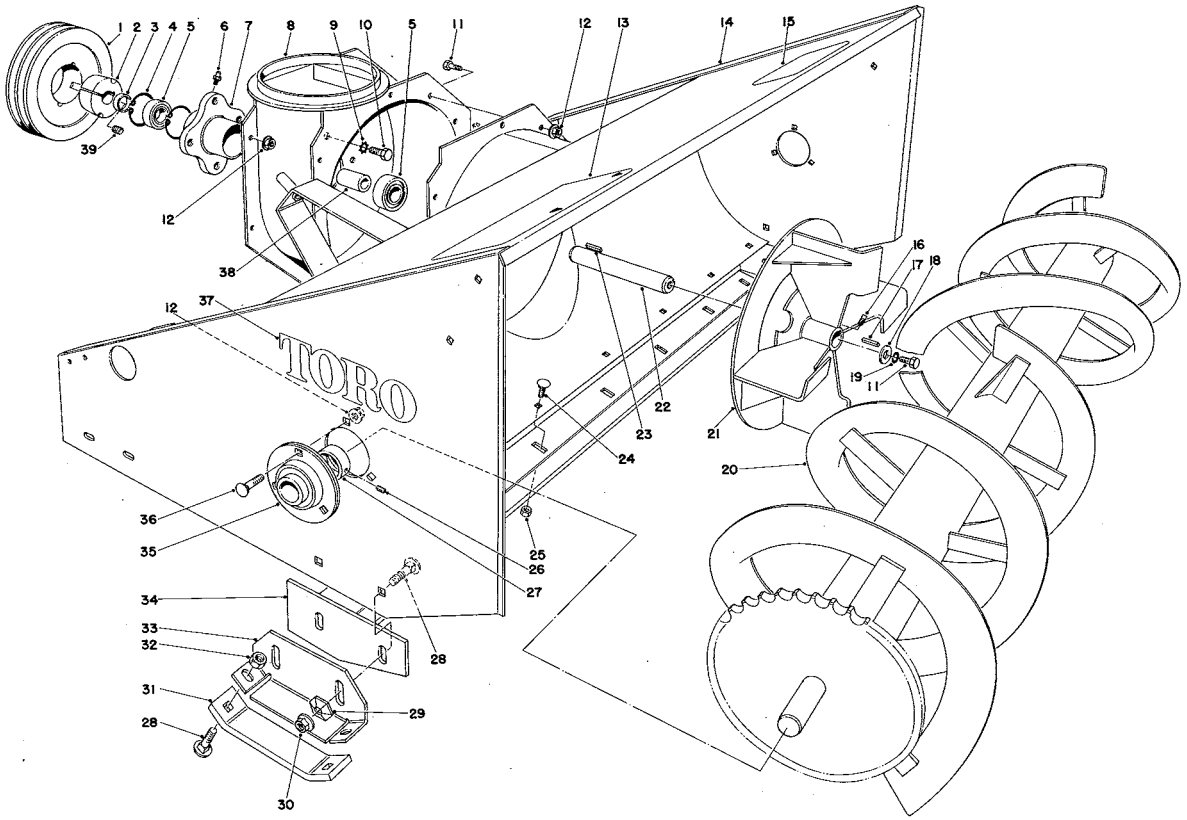

AUGER HOUSING

Ref. No.	Part No.	Description	No. Used
1	37-5100	Pulley Taper Lock	1
2	37-5150	Taper Lock Bushing	1
3	37-5170	Spacer	1
4	32151-20	Snap Ring	2
5	31-0530	Bearing	2
6	302-11	Grease Fitting	1
7	32-4950	Housing Spindle	1
8	32-4570	Blower Housing	1
9	3255-2	Lockwasher	4
10	3213-20	Capscrew	4
11	322-3	Capscrew	9
12	32128-20	Flange Nut	16
13	37-5750	Decal - Rear Weight	1
14	37-5370	Auger Housing	1
15	29-6350	Decal - Warning	1
16	3243-1	Square Head Setscrew	2
17	31-0700	Square Key	1
18	3-6715	Flat Washer	1
19	3253-4	Lockwasher	1
20	32-6140	Auger	1

Ref. No.	Part No.	Description	No. Used
21	32-6130	Impeller	1
22	37-5240	Shaft - Impeller	1
23	21-5070	Square Key	1
24	3230-19	Carriage Bolt	7
25	3296-47	Locknut	7
26	3245-1	Set Screw	2
27	251-77	Locking Collar	2
28	3231-2	Carriage Bolt	8
29	3290-224	Pyramidal Lockwasher	4
30	32128-18	Flange Nut	4
31	37-5110	Skid - Shoe	2
32	32153-2	Locknut	4
33	37-4950	Skid - Mount Plate	2
34	37-5380	Scraper	1
35	30-0170	Bearing	2
36	3230-1	Carriage Bolt	6
37	27-4600	Decal - Toro	2
38	31-0540	Sleeve	1
39	3247-4	Set Screw Socket Hd. Cap Point	2

COPYRIGHT© ALL RIGHTS RESERVED
The Toro Company 1978

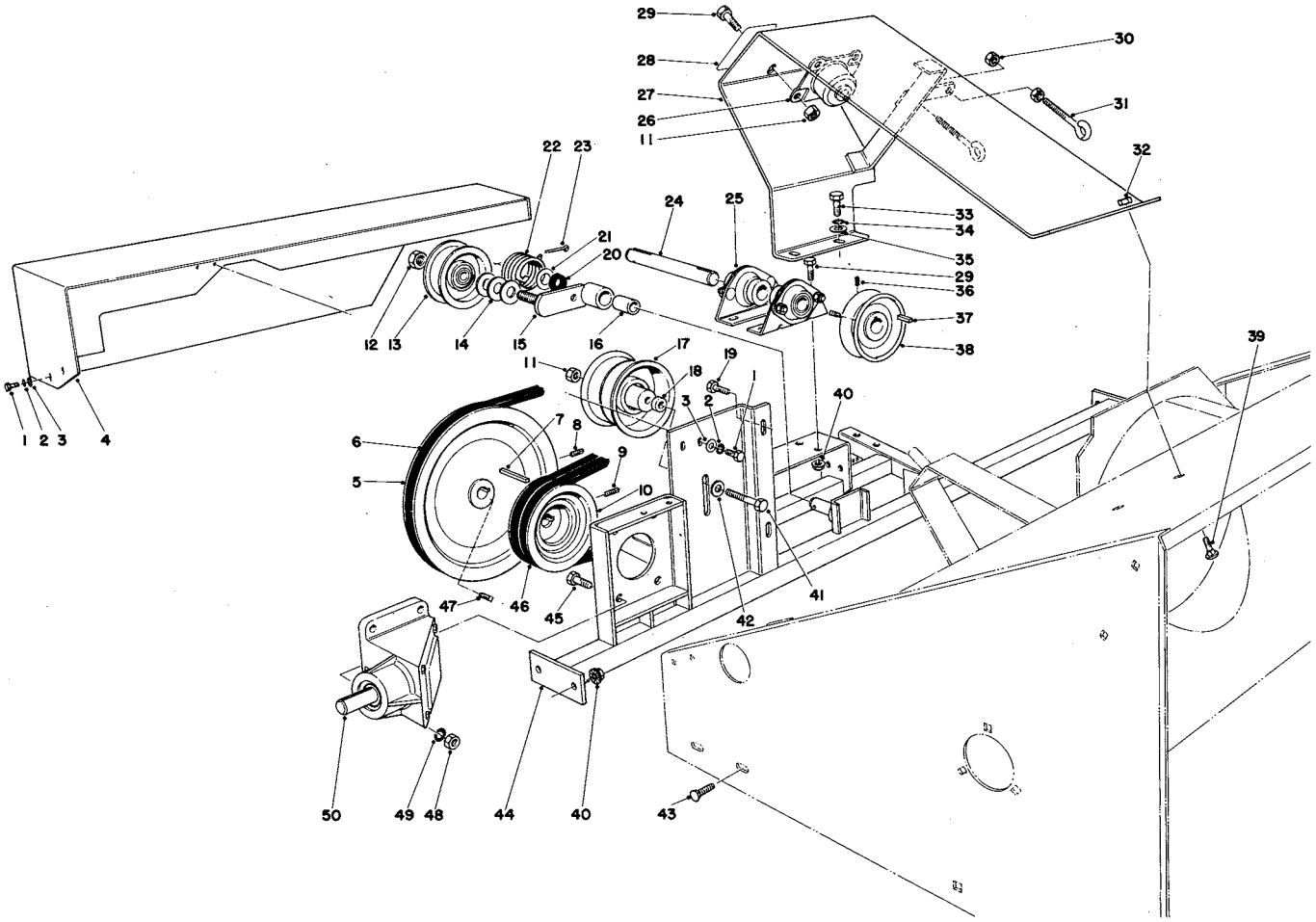

CROSS FRAME & PULLEY ASSEMBLIES

Ref. No.	Part No.	Description	No. Used
1	321-4	Hex Hd. Capscrew	4
2	3253-3	Lockwasher	4
3	3256-16	Flat Washer	4
4	37-5510	Belt Shield	1
5	32-4480	Sheave	1
6	37-5660	V - Belt	1
7	3-0971	Key	1
8	3242-2	Square Head Setscrew	2
9	3242-6	Square Head Setscrew	2
10	37-5090	Pulley Gear Box	1
11	32152-2	Locknut	5
12	30-8670	Locknut	1
13	32-2820	Flat Idler	1
14	3256-27	Flat Washer	3
15	37-5470	Idler Arm (Incl. Ref. No. 16)	1
16	31-0680	Bushing	1
17	37-5760	Idler Pulley	1
18	37-5210	Spacer Idler	1
19	322-3	Capscrew	2
20	31-7620	Felt Washer	1
21	31-0210	Washer - Shim	1
22	31-9500	Spring - Torsion	1
23	3272-23	Cotter pin	1
24	37-5250	Jackshaft	1
25	32-1520	Bearing	2

Ref. No.	Part No.	Description	No. Used
26	37-5330	Flange Bearing	1
27	37-5520	Bearing Support	1
28	37-5740	Decal - Chute Rotation	1
29	323-4	Capscrew	8
30	3218-2	Jam Nut	4
31	30-0980	Eyebolt	2
32	3296-29	Locknut	2
33	322-2	Capscrew	2
34	3253-4	Lockwasher	2
35	3256-2	Flat Washer	2
36	3242-1	Square Head Set Screw	1
37	5-7280	Square Key	1
38	32-1790	Sheave	1
39	3230-1	Carriage Bolt	2
40	3290-357	Locknut	8
41	323-11	Capscrew	1
42	3256-3	Flat Washer	1
43	3231-30	Carriage Bolt	4
44	37-5400	Cross Bracket	1
45	323-7	Capscrew	4
46	37-5670	V - Belt	1
47	3242-4	Set Screw	1
48	3217-7	Nut	4
49	3253-21	Lockwasher	4
50	37-5410	Gear Box Assembly	1

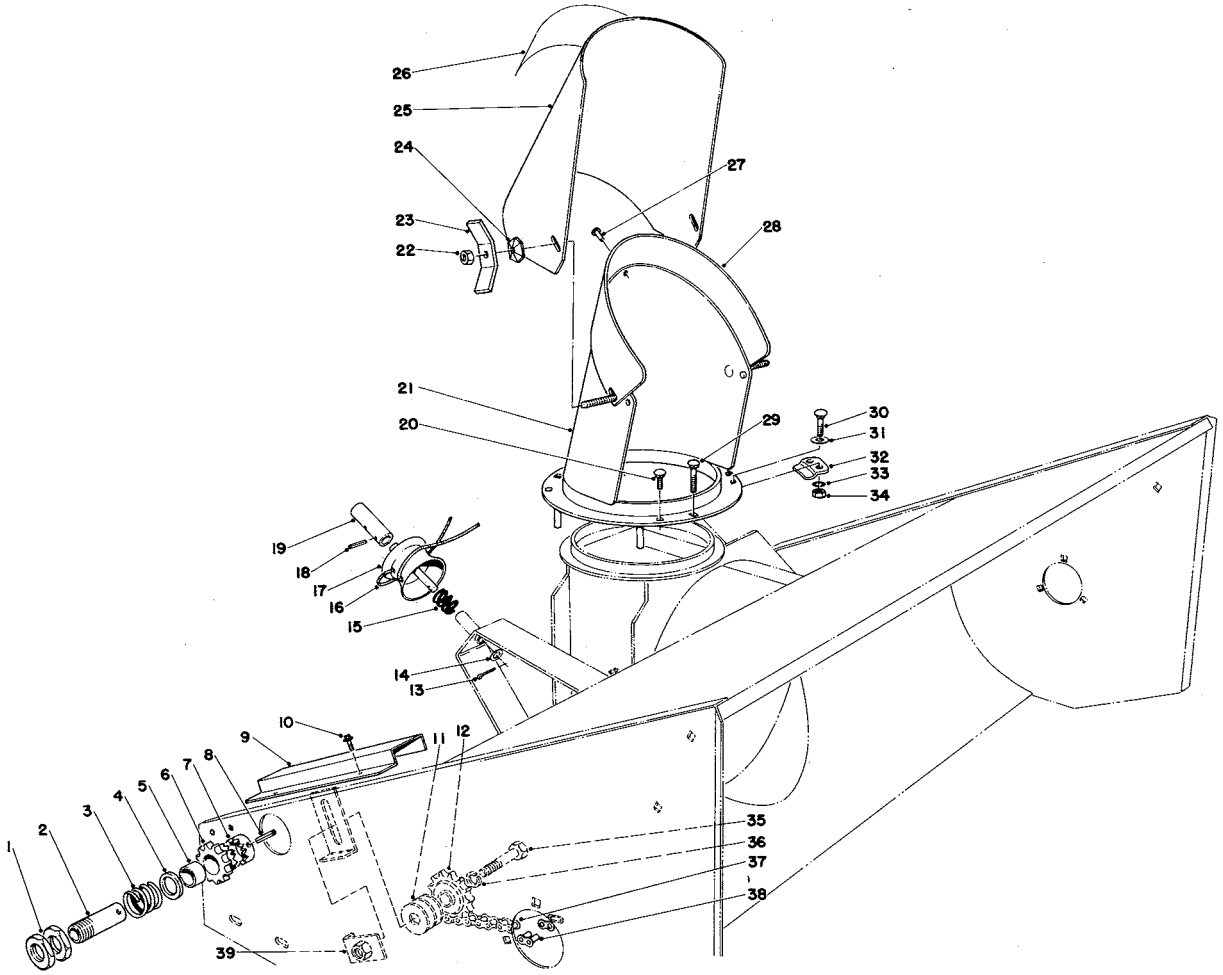

CHUTE ASSEMBLY

Ref. No.	Part No.	Description	No. Used
1		Nut - thin	2
2		Clutch Sleeve	1
3		Spring Compression	1
4		Spacer	1
5		Bushing	1
6		Clutch Sprocket	1
7		Clutch Collar	1
8		Roll Pin	1
9	32-1620	Chain Cover	1
10	32104-76	Self Tapping Screw	2
11	3256-7	Flat Washer	3
12	30-0090	Idler Sprocket	1
13	3272-11	Cotter Pin	1
14	3256-24	Flat Washer	1
15	30-1060	Spring - Compression	1
16	37-5820	Cable	1
17	32-1880	Pulley	1
18	32121-45	Roll Pin	1
19	37-5270	Tube - Connector	1
20	3229-10	Carriage Bolt	2

Ref. No.	Part No.	Description	No. Used
21	37-5390	Spout	1
22	3296-29	Locknut	2
23	30-0720	Wing Nut	2
24	3290-238	Pyramidal Lockwasher	2
25	37-5910	Deflector	1
26	29-6350	Decal - Warning	1
27	3290-56	Pop Rivet	1
28	37-5930	Seal - Plastic	1
29	3229-2	Carriage Bolt	2
30	3229-1	Carriage Bolt	2
31	3256-3	Flat Washer	2
32	30-0710	Clamp - Spout	3
33	3253-3	Lockwasher	6
34	3217-5	Hex Nut	6
35	327-6	Hex Hd. Capscrew	1
36	3253-8	Lockwasher	1
37	30-0160	Chain - Roller	1
38	2710-11	Connecting Link	1
39	30-0450	Nut Plate	1
*	37-5640	Slip Clutch (Incl. Ref. #1-8)	1

* Not illustrated

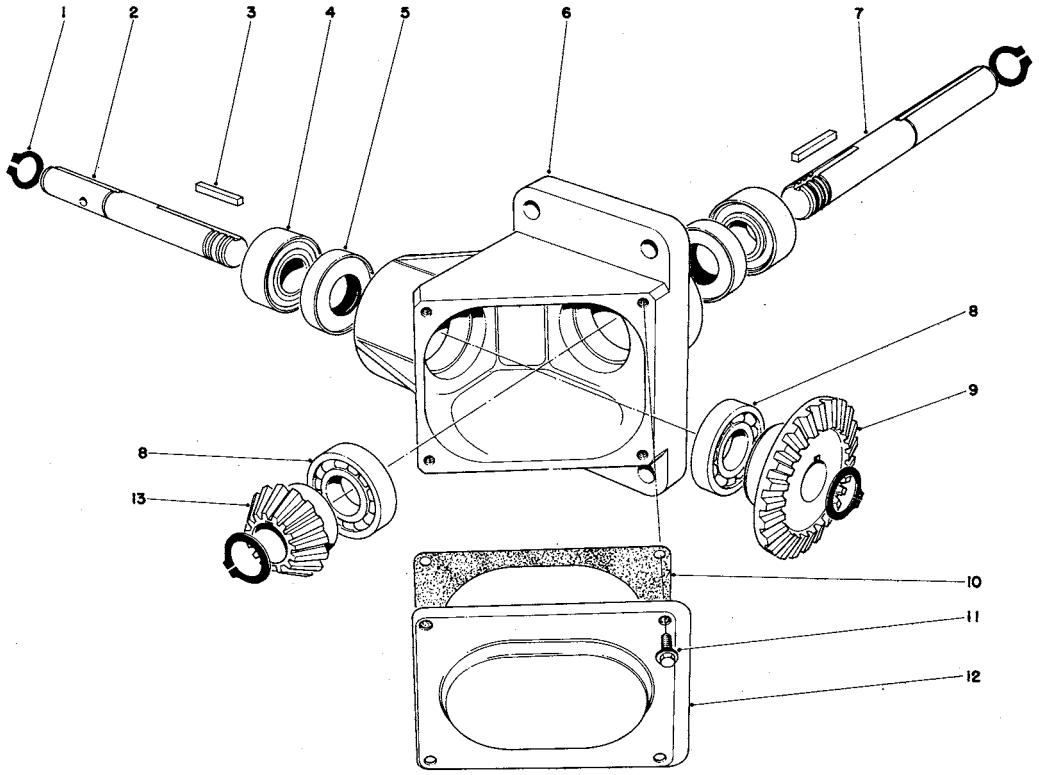

GEAR BOX ASSEMBLY

Ref. No.	Part No.	Description	No. Used
1	32120-72	Retaining Ring	4
2	30-0590	Shaft	1
3	30-0660	Key	2
4	30-0630	Bearing	2
5	30-0640	Oil Seal	2
6	30-0650	Housing	1
7	37-5840	Shaft	1

Ref. No.	Part No.	Description	No. Used
8	30-0620	Bearing	2
9	30-0670	Gear	1
10	30-0680	Gasket - Cover Plate	1
11	12-3270	Screw Special	4
12	30-0690	Cover Plate	1
13	30-0600	Gear	1

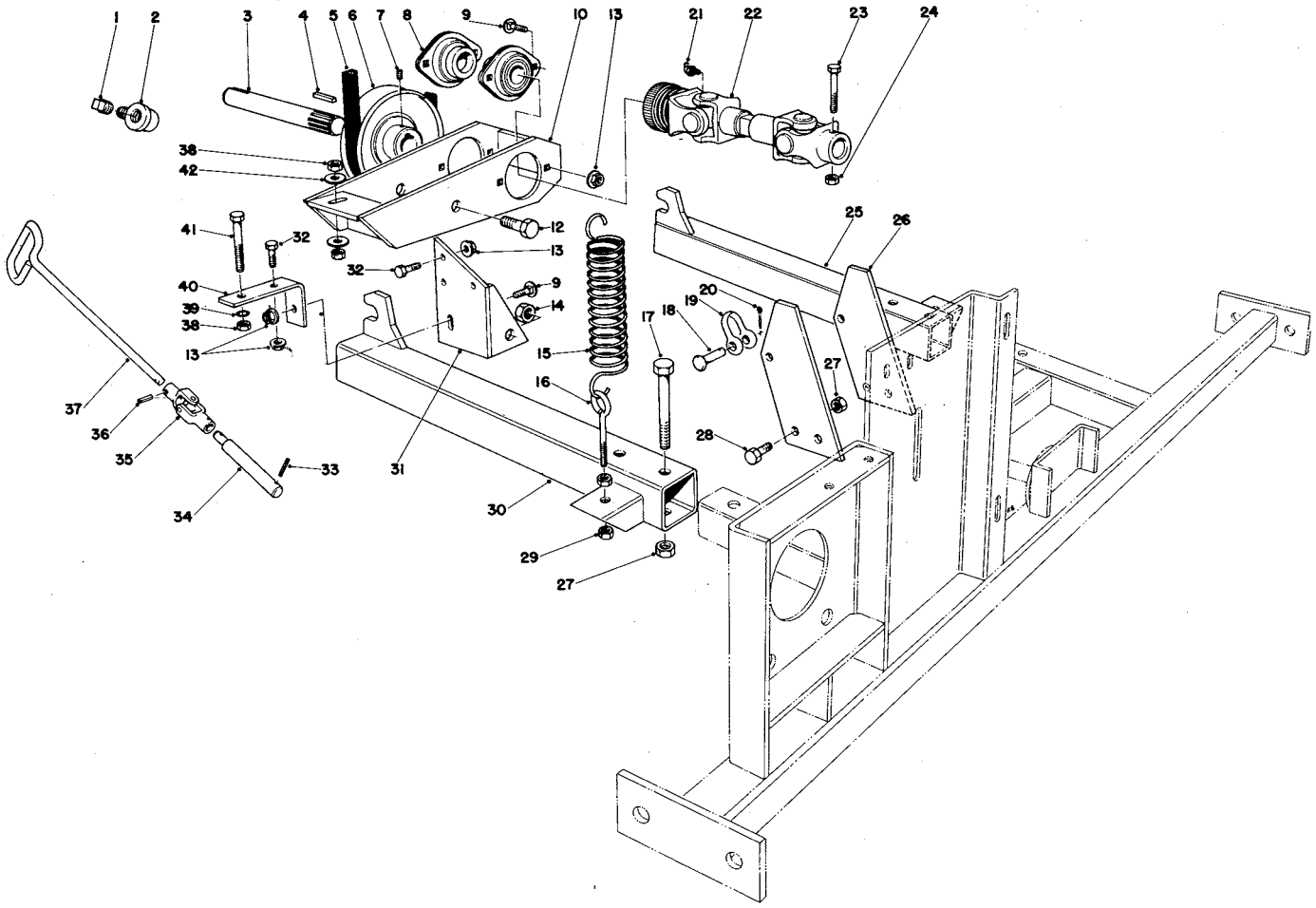

ADAPTER KIT MODEL NO. 30825

Ref. No.	Part No.	Description	No. Used
1	281-3	Pipe Plug	1
2	30-1080	90° Elbow	1
3	30-0230	Jackshaft	1
4	5-7280	Key	1
5	30-0910	V - Belt	1
6	32-1780	Sheave	1
7	3246-4	Slotted Head Set Screw	2
8	30-0730	Bearing	2
9	3290-391	Carriage Bolt	5
10	32-4610	Bearing Support	1
12	325-5	Capscrew	2
13	32128-20	Locknut	9
14	32152-3	Locknut	2
15	30-1020	Extension Spring	2
16	30-0980	Eyebolt	2
17	323-11	Capscrew	4
18	283-1	Clevis Pin	2
19	282-4	Clevis	2
20	3272-6	Cotter Pin	2
21	21-5980	Grease Fitting	2
22	32-1530	Power Take Off Shaft	1

Ref. No.	Part No.	Description	No. Used
23	322-10	Capscrew	1
24	32153-3	Locknut	1
25	32-1760	Tool Bar L.H.	1
26	37-5890	Lifting Lug	2
27	32152-2	Locknut	8
28	323-6	Hex Hd. Capscrew	4
29	3217-6	Nut	4
30	32-1770	Tool Bar R.H.	1
31	32-1800	Hinge Plate	1
32	322-3	Hex Hd. Capscrew	4
33	32121-45	Roll Pin	1
34	37-5870	Pin Connector	1
35	30-1050	Universal Joint	1
36	32121-23	Roll Pin	2
37	37-5900	Rod - Spout Control	1
38	3217-7	Nut	3
39	3253-21	Lockwasher	1
40	30-0320	Angle Support	1
41	323-12	Capscrew	1
42	3256-24	Flat Washer	2

The Toro Promise

A One Year Limited Warranty on Turf Products Other Than Walk Rotary Mowers

The Toro Company promises to repair any TORO Product if defective in materials or workmanship. The following time periods from the date of purchase apply:

Turf Products	1 Year
Hevi-Duty Walk Rotary Mowers	90 Days

The costs of parts and labor are included, but the customer pays the transportation costs on walk rotary mowers.

Should you feel your TORO is defective and wish to rely on The Toro Promise, the following procedure is recommended:

1. Contact your Authorized TORO Distributor (the Yellow Pages of your telephone directory is a good reference source).

2. The TORO Distributor will advise you on the arrangements that can be made to inspect and repair your product.

3. The TORO Distributor will inspect the product and advise you whether the product is defective and, if so, make all repairs necessary to correct the defect without extra charge to you.

If for any reason you are dissatisfied with the distributor's analysis of the defect or the service performed, you may contact us.

Write:

TORO Turf Products Service Department
8111 Lyndale Avenue South
Minneapolis, Minnesota 55420

The above remedy of product defects through repair by an Authorized TORO Distributor is the purchaser's sole remedy for any defect.

THERE IS NO OTHER EXPRESS WARRANTY. ALL IMPLIED WARRANTIES OF MERCHANTABILITY AND FITNESS FOR USE ARE LIMITED TO THE DURATION OF THE EXPRESS WARRANTY.

Some states do not allow limitation on how long implied warranty lasts, so the above limitation may not apply to you.

This Warranty applies only to parts or components which are defective and does not cover repairs necessary due to normal wear, misuse, accidents, or lack of proper maintenance. Regular, routine maintenance of the unit to keep it in proper operating condition is the responsibility of the owner.

All warranty repairs reimbursable under The Toro Promise must be performed by an Authorized TORO Distributor using Toro approved replacement parts.

Repairs or attempted repairs by anyone other than an Authorized TORO Distributor are not reimbursable under The Toro Promise. In addition, these unauthorized repair attempts may result in additional malfunctions, the correction of which is not covered by warranty.

The Toro Company is not liable for indirect, incidental or consequential damages in connection with the use of the product including any cost or expense of providing substitute equipment or service during periods of malfunction or non-use.

Some states do not allow the exclusion of incidental or consequential damages, so the above exclusion may not apply to you.

This warranty gives you specific legal rights, and you may also have other rights which vary from state to state.

Litho in U.S.A.