Form No. 3445-177 Rev B

TORO®

Count on it.

Parts Catalog

# TimeCutter® MX 5075

## Riding Mower

**Model No. 75755—Serial No. 409568782 and Up**

Register at www.Toro.com.
Original Instructions (EN)

*3445-177* B

# Ordering Replacement Parts

To order replacement parts, please supply the part number, the quantity, and the description of each part desired.

### Understanding Reference Numbers

Each identified part in an illustration has a reference number. The reference number for a part also appears in the parts list, along with other information about the part.

This catalog uses two special reference number formats, one to indicate parts in a service assembly and another to indicate the quantity of a given part in an illustration.

### Service Assembly Reference Numbers

Parts in service assemblies have reference numbers in the form a:b. The a represents the reference number of the entire service assembly and the b represents a sequential number unique to each part within the service assembly.

For example, a wheel assembly might be identified by reference number 6, the tire by 6:1, the valve by 6:2, and the wheel by 6:3. When you order the assembly identified by reference number 6, you receive all parts identified by reference numbers 6:1,6:2, and 6:3. However, you may also order any part individually. Reference numbers of this type appear in illustration and in parts lists.

### Reference Numbers Indicating Quantity

In an illustration, if a reference number indicates more than one part, the reference number has the form nX y. The n represents the quantity of the part, the X is the multiplication symbol, and the y represents the reference number.

For example, in an illustration, the reference number 2X 37 means that two of the parts identified by reference number 37 are indicated.

# Contents

Frame Assembly . . . . . 4
Deck Lift Assembly . . . . . 6
Caster, Wheel and Tire Assembly . . . . . 8
Traction Drive Assembly . . . . . 10
LH Transaxle Assembly No. 139-7460 . . . . . 12
RH Transaxle Assembly No. 139-7461 . . . . . 14
Brake Assembly . . . . . 16
Rear Tire Assembly . . . . . 18
Motion Control Assembly . . . . . 20
Engine and Muffler Assembly . . . . . 22
Fuel System Assembly . . . . . 24
Carburetor Assembly . . . . . 26
Air Intake and Filtration Assembly . . . . . 28
Ignition and Cooling Fan Assembly . . . . . 30
Crankcase and Crankshaft Assembly . . . . . 32
Governor Control Assembly . . . . . 34
Piston and Cylinder Head Assembly . . . . . 36
Blower Housing Assembly . . . . . 38
Gasket and Seal Kit Assembly . . . . . 40
Body Styling and Fuel Pod Assembly . . . . . 42
Electrical Assembly . . . . . 44
50in Deck and Decal Assembly . . . . . 46
Frame Decal Assembly . . . . . 48
Seat Pan Assembly . . . . . 50
Seat Assembly No. 140-8303 . . . . . 52
Clutch Assembly . . . . . 54
Attachments and Accessories . . . . . 56

**© 2022—The Toro® Company**
**8111 Lyndale Avenue South**
**Bloomington, MN 55420**



**Contact us at www.Toro.com.**
**Printed in the USA.**
**All Rights Reserved**

# Frame Assembly

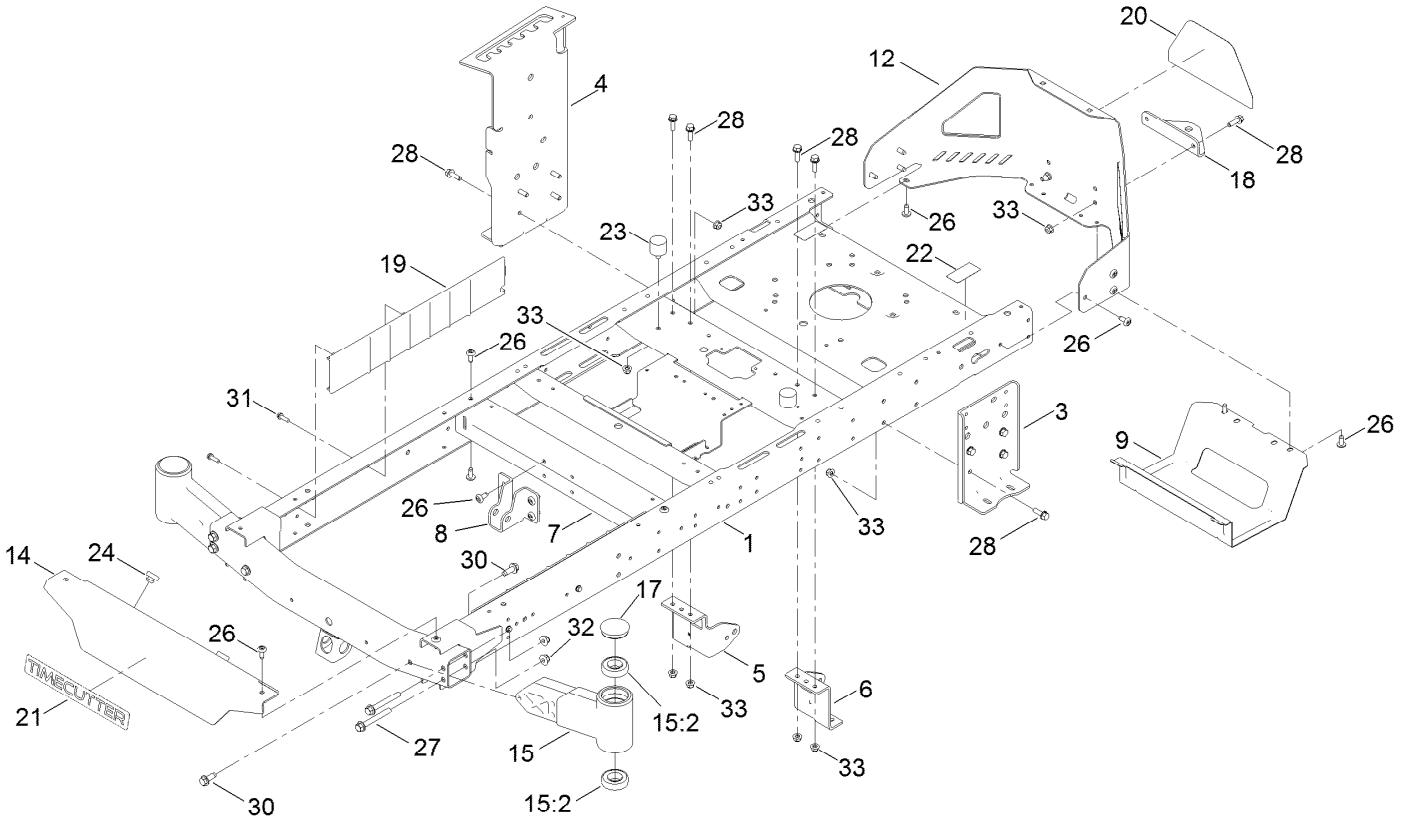

# Frame Assembly (continued)

| Ref. | Part Number | Qty. | Description |
|---|---|---|---|
| 1 | 137-9820-01 | 1 | Frame Assembly |
| 3 | 138-7520-01 | 1 | Plate-Mount, Hydro |
| 4 | 139-2352-01 | 1 | Plate-Mount Hydro, RH |
| 5 | 137-7020-01 | 1 | Mount-Hydro, Front (Right) |
| 6 | 139-3211-01 | 1 | Mount-Hydro, Front (Left) |
| 7 | 138-2527-01 | 1 | Brace-Cross, Lower |
| 8 | 139-3260-01 | 1 | Bracket-Mount Damper, Lower |
| 9 | 138-0867-03 | 1 | Guard-Muffler |
| 12 | 138-9820-03 | 1 | Guard-Engine |
| 14 | 138-7596-01 | 1 | Footrest |
| 15 | 140-2097 | 2 | Axle Stub ASM |
| 15:2 | 109-3678 | 2 | Bearing-Ball |
| 17 | 138-7200 | 2 | Cap-Grease |
| 18 | 117-1232-03 | 1 | Bracket-Hitch |
| 19 | 138-7516 | 2 | Guard-Rail |
| 20 | 139-5890 | 1 | Decal-Timecutter |
| 21 | 139-2387 | 1 | Decal-Timecutter |
| 22 | 121-2989 | 2 | Decal-Bypass |
| 23 | 137-4803 | 2 | Bumper-Rubber |
| 24 | 140-3460 | 2 | Bumper-Rubber |
| 26 | 138-9753 | 20 | Screw |
| 27 | 139-2429 | 4 | Screw-HHF |
| 28 | 3234-29 | 14 | Screw-HHF |
| 30 | 139-2428 | 4 | Screw-HWH |
| 31 | 46-8091 | 4 | Screw-HWH |
| 32 | 139-2430 | 4 | Nut-HF, NI |
| 33 | 104-8300 | 16 | Nut-HF, NI |

# Deck Lift Assembly

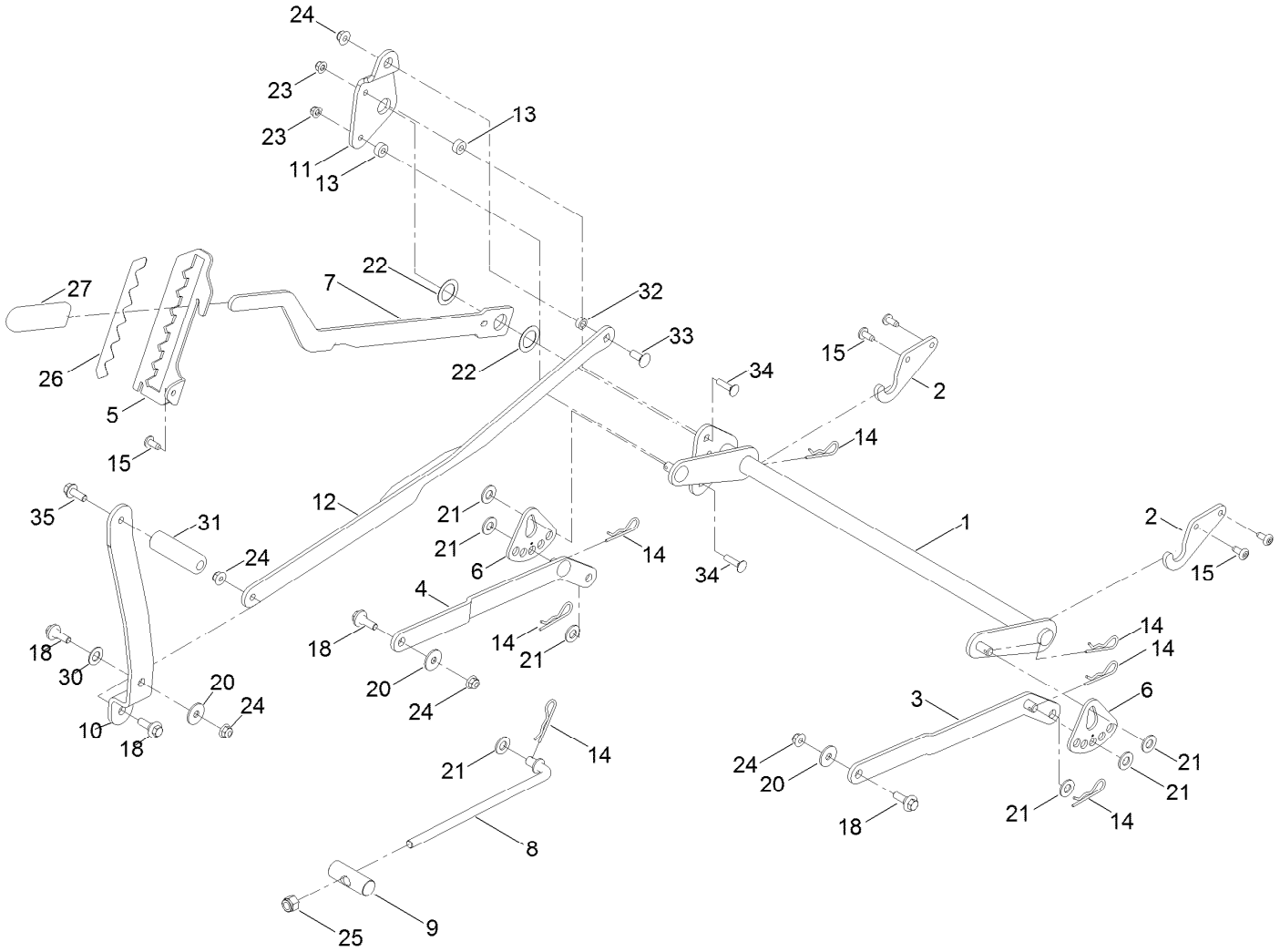

# Deck Lift Assembly (continued)

| Ref. | Part Number | Qty. | Description |
|---|---|---|---|
| 1 | 137-7093-03 | 1 | Deck Lift ASM |
| 2 | 138-6021 | 2 | Bracket-Pivot, Decklift |
| 3 | 137-9844 | 1 | LH Arm ASM |
| 4 | 137-9846 | 1 | RH Arm ASM |
| 5 | 139-2350-01 | 1 | Bracket-HOC |
| 6 | 138-2564 | 2 | Plate-Adjustment, HOC |
| 7 | 137-7087-03 | 1 | Lever-Lift |
| 8 | 138-6050 | 1 | Rod-Mount, Deck |
| 9 | 119-8810 | 1 | Pin-Pivot |
| 10 | 138-2549-03 | 1 | Pedal-Lift |
| 11 | 137-7086 | 1 | Plate-Footlift |
| 12 | 140-2746-03 | 1 | Link ASM |
| 13 | 140-3461 | 2 | Spacer |
| 14 | 1-806005 | 7 | Pin-Cotter |
| 15 | 138-9753 | 5 | Screw |
| 18 | 137-9847 | 4 | Screw-Shoulder |
| 20 | 93-8806 | 3 | Washer-Hardened |
| 21 | 3256-26 | 7 | Washer-Flat |
| 22 | 63-2290 | 2 | Washer-Thrust |
| 23 | 104-8300 | 2 | Nut-HF, NI |
| 24 | 104-8301 | 5 | Nut-HF, NI |
| 25 | 3296-19 | 1 | Nut-Hex |
| 26 | 139-2392 | 1 | Decal-HOC |
| 27 | 1-633268 | 1 | Grip-Lever |
| 30 | 120-2273 | 1 | Washer-Nylon |
| 31 | 139-7452 | 1 | Pedal-Foot Lift |
| 32 | 140-2093 | 1 | Spacer |
| 33 | 139-2590 | 1 | Screw-CARR |
| 34 | 3230-3 | 2 | Screw-CARR |
| 35 | 139-2597 | 1 | Screw-HHF |

# Caster, Wheel and Tire Assembly

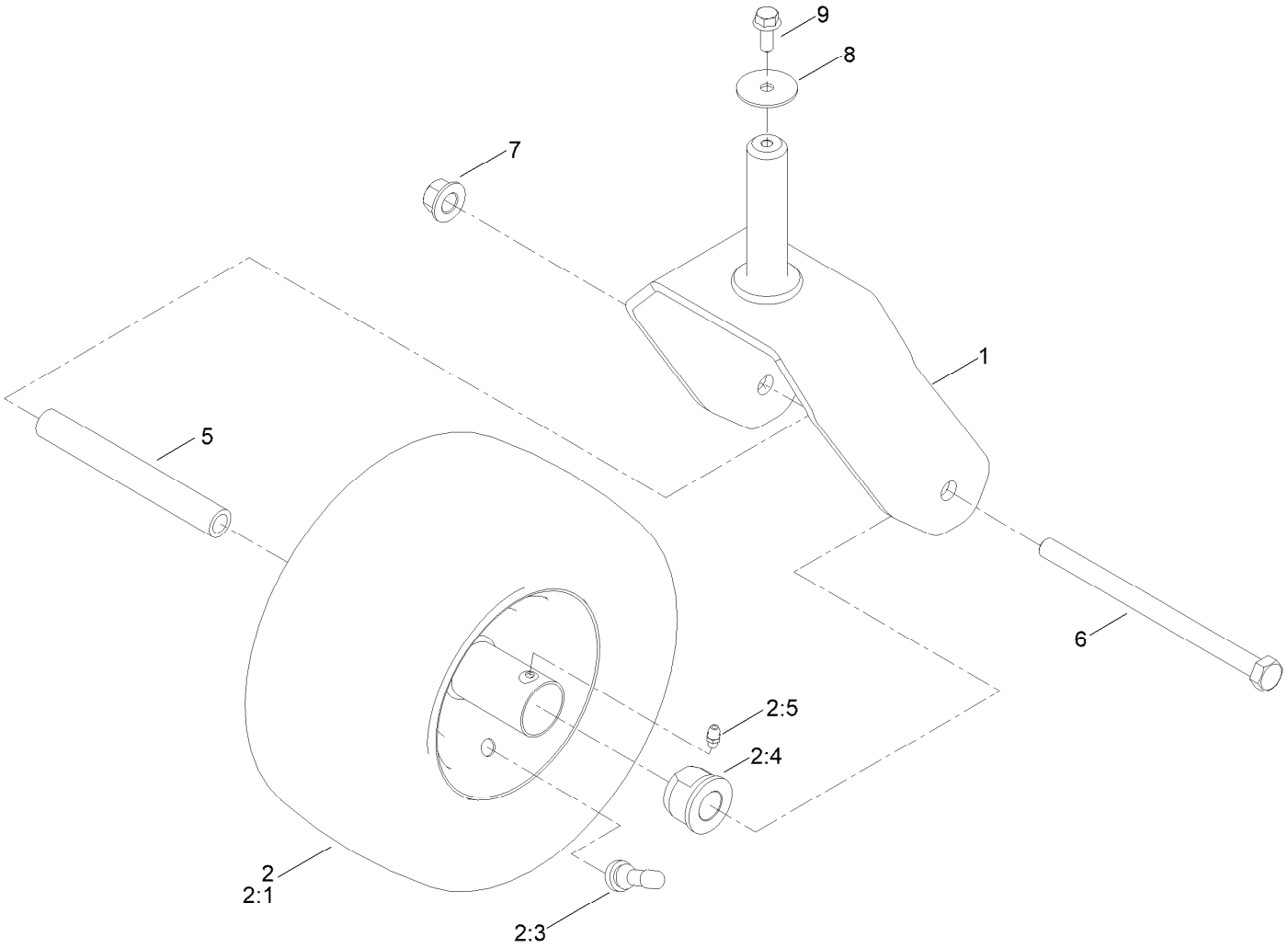

# Caster, Wheel and Tire Assembly (continued)

| Ref. | Part Number | Qty. | Description |
|---|---|---|---|
| 1 | 138-9839-01 | 2 | Fork ASM |
| 2 | 139-5843 | 2 | Tire ASM |
| 2:1 | 140-0374 | 1 | Tire |
| 2:3 | 232-27 | 1 | Stem-Valve |
| 2:4 | 114-1640 | 2 | Bushing-Flange |
| 2:5 | 302-5 | 1 | Fitting-Grease |

| Ref. | Part Number | Qty. | Description |
|---|---|---|---|
| 5 | 138-9803 | 2 | Spacer-Spanner |
| 6 | 325-36 | 2 | Screw-HH |
| 7 | 99-5107 | 2 | Nut-Lock |
| 8 | 3256-68 | 2 | Washer-Flat |
| 9 | 3234-47 | 2 | Screw-HHF |

# Traction Drive Assembly

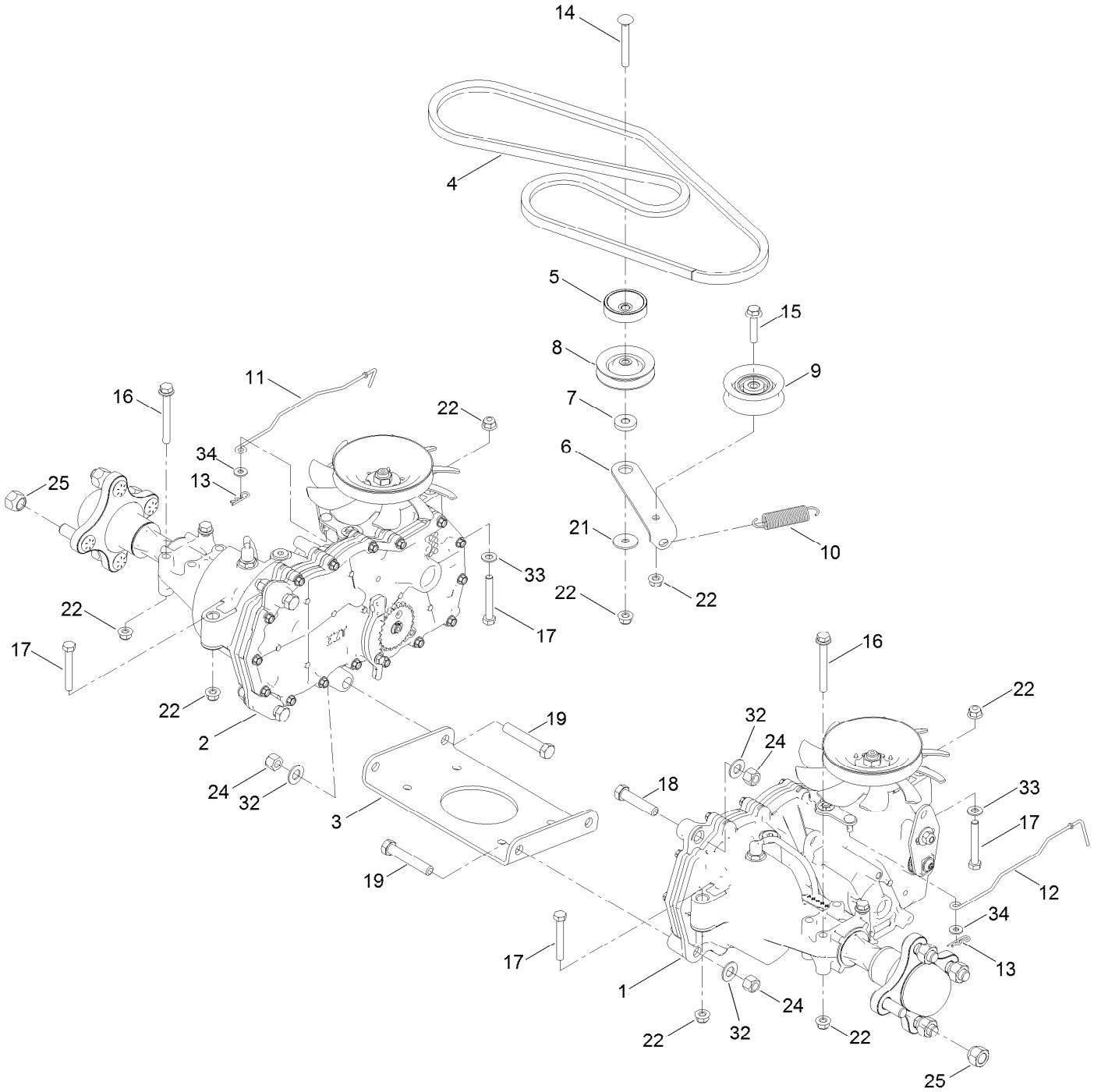

# Traction Drive Assembly (continued)

| Ref. | Part Number | Qty. | Description |
|---|---|---|---|
| 1 | 139-7460 | 1 | LH Hydro Transaxle ASM |
| 2 | 139-7461 | 1 | RH Hydro Transaxle ASM |
| 3 | 138-2571-03 | 1 | Crossplate-Hydro |
| 4 | 139-2399 | 1 | V-Belt |
| 5 | 138-9809 | 1 | Spacer |
| 6 | 138-7276 | 1 | Arm-Idler |
| 7 | 138-7277 | 1 | Spacer-Arm, Idler |
| 8 | 68-0030 | 1 | Idler |
| 9 | 138-7597 | 1 | Pulley-Idler, Flat |
| 10 | 137-7040 | 1 | Spring-Return, Pedal |
| 11 | 138-7245 | 1 | Rod-Bypass, RH |
| 12 | 138-7243 | 1 | Rod-Bypass, LH |
| 13 | 3290-307 | 2 | Pin-Cotter |

| Ref. | Part Number | Qty. | Description |
|---|---|---|---|
| 14 | 3230-8 | 1 | Screw-CARR |
| 15 | 115-1794 | 1 | Screw-HHF |
| 16 | 138-7590 | 4 | Screw-HHF |
| 17 | 322-11 | 4 | Screw-HH |
| 18 | 324-8 | 2 | Screw-HH |
| 19 | 324-10 | 4 | Screw-HH |
| 21 | 5-4460 | 1 | Washer-Pivot |
| 22 | 104-8300 | 10 | Nut-HF, NI |
| 24 | 3296-48 | 6 | Nut-Hex |
| 25 | 242-50 | 8 | Nut-Lug |
| 32 | 3256-25 | 6 | Washer-Flat |
| 33 | 3256-23 | 2 | Washer-Plain |
| 34 | 119-8952 | 2 | Washer |

# LH Transaxle Assembly No. 139-7460

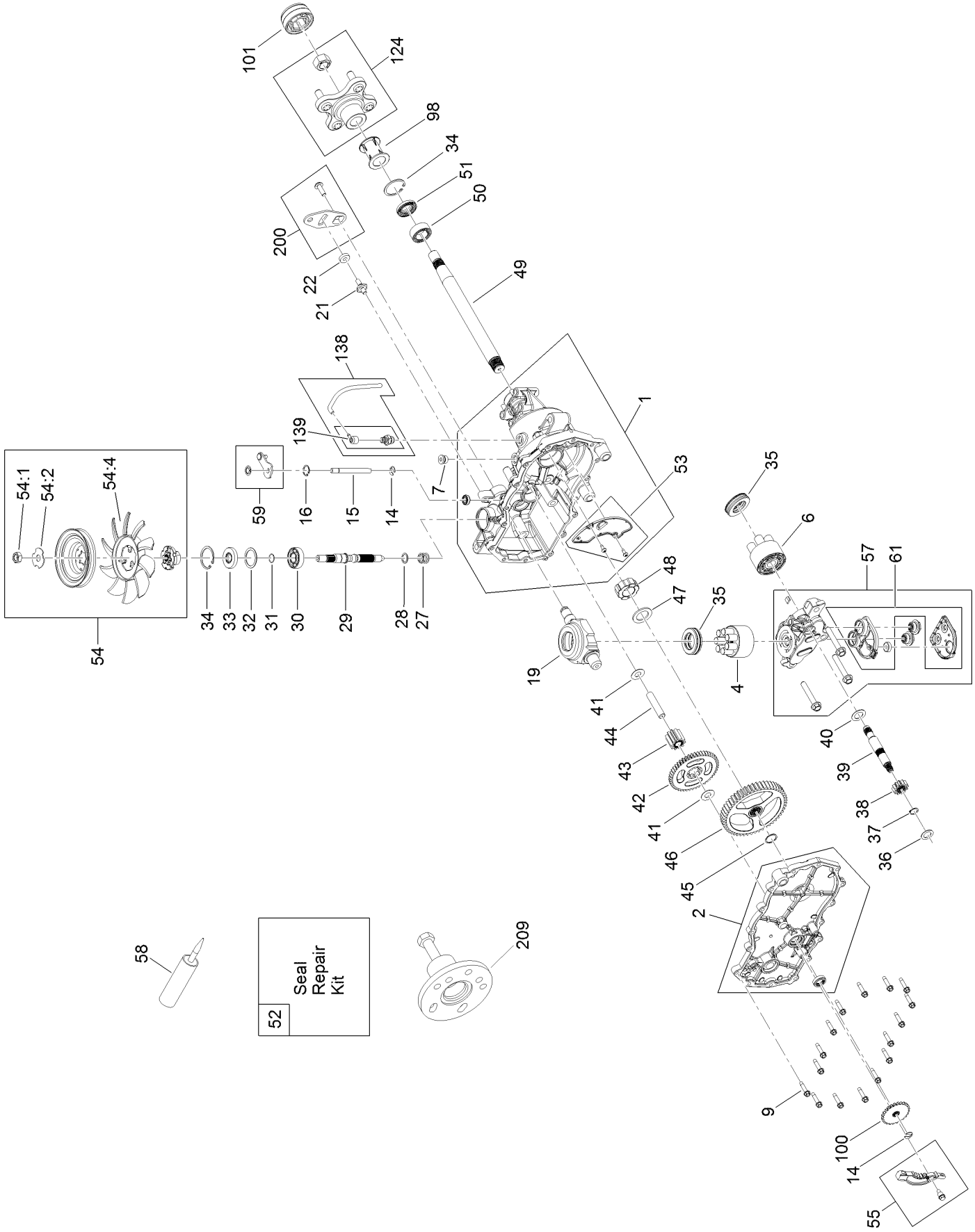

# LH Transaxle Assembly No. 139-7460 (continued)

| Ref. | Part Number | Qty. | Description |
|---|---|---|---|
| 1 | 106-8695 | 1 | Main Housing ASM |
| 2 | 106-8696 | 1 | Side ASM |
| 4 | 110-8561 | 1 | Pump Block ASM |
| 6 | 103-2666 | 1 | Cylinder Block Kit |
| 7 | 104-2189 | 1 | Plug-Thread, Straight |
| 9 | 104-5305 | 16 | Screw-HHF |
| 14 | 106-8677 | 1 | Ring-Retaining, External |
| 15 | 106-8678 | 1 | Rod-Bypass |
| 16 | 106-8679 | 1 | Ring-Retaining, Internal |
| 19 | 104-5304 | 1 | Swashplate-Trunnion |
| 21 | 104-2116 | 1 | Stud |
| 22 | 112-9853 | 1 | Puck-Friction |
| 27 | 94-1936 | 1 | Spring-Block |
| 28 | 120-5538 | 1 | Washer |
| 29 | 104-5306 | 1 | Shaft-Input |
| 30 | 104-5311 | 1 | Bearing-Ball |
| 31 | 104-5307 | 1 | Ring-Retaining |
| 32 | 104-5308 | 1 | Spacer |
| 33 | 104-5310 | 1 | Seal-Lip |
| 34 | 104-5309 | 2 | Ring-Retaining |
| 35 | 94-6922 | 2 | Bearing-Thrust |
| 36 | 104-5339 | 1 | Washer-Flat |
| 37 | 104-5340 | 1 | Ring-Retaining |
| 38 | 104-5316 | 1 | Gear-Pinnion, 13T |
| 39 | 106-8683 | 1 | Shaft-Motor |
| 40 | 104-5360 | 1 | Washer |
| 41 | 119-5541 | 2 | Washer |
| 42 | 104-5317 | 1 | Gear-10T/48T |
| 43 | 104-5318 | 1 | Gear-Jackshaft, 10T |
| 44 | 104-5329 | 1 | Pin-Jackshaft |
| 45 | 112-9854 | 1 | Ring-Spiral, Retaining |
| 46 | 112-9855 | 1 | Gear-52T, Bull |
| 47 | 112-9856 | 1 | Washer |
| 48 | 112-9857 | 1 | Bearing-Sleeve |
| 49 | 120-7104 | 1 | Shaft-Axle |
| 50 | 112-9859 | 1 | Bushing-Axle |
| 51 | 112-9860 | 1 | Seal-Lip |
| 52 | 106-8686 | 1 | Seal Kit |
| 53 | 106-8697 | 1 | Expansion Plate Kit |
| 54 | 135-7349 | 1 | Fan And Pulley Kit |
| 54:1 | 116-9714 | 1 | Nut-HJ |
| 54:2 | 116-9708 | 1 | Washer-Slotted |
| 54:4 | 135-7364 | 1 | Fan 7.0 X 10 Blade |
| 55 | 106-8688 | 1 | Brake Arm Kit |
| 57 | 112-9861 | 1 | Center Section Filter Kit |
| 58 | 104-2147 | 1 | Sealant |
| 59 | 120-5549 | 1 | Bypass Kit |
| 61 | 114-1634 | 1 | Filter Kit |
| 98 | 120-7109 | 1 | Tube-Axle |
| 100 | 106-8694 | 1 | Disc-Brake, Cog |
| 101 | 115-5057 | 1 | Cover-Nut, Axle |
| 124 | 109-5939 | 1 | Hub Kit |
| 138 | 112-9866 | 1 | Breather Kit |
| 139 | 114-1635 | 1 | Breather ASM |
| 200 | 117-5362 | 1 | Control Arm Kit |
| 209 | 114-8467 | 1 | Puller-Hub, 4 Bolt |

# RH Transaxle Assembly No. 139-7461

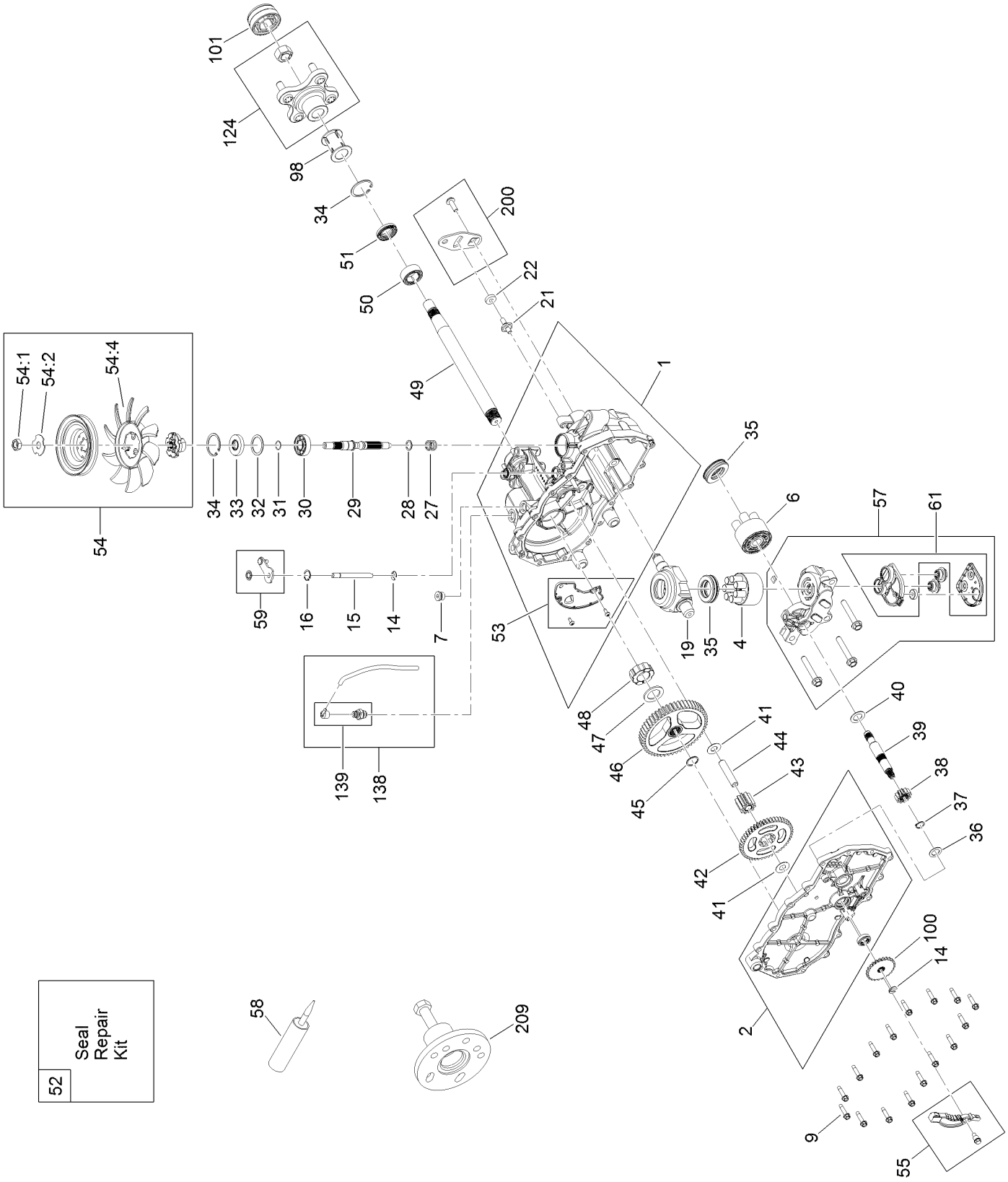

# RH Transaxle Assembly No. 139-7461 (continued)

| Ref. | Part Number | Qty. | Description |
|---|---|---|---|
| 1 | 106-8674 | 1 | Main Housing ASM |
| 2 | 106-8675 | 1 | Side ASM |
| 4 | 110-8561 | 1 | Pump Block ASM |
| 6 | 103-2666 | 1 | Cylinder Block Kit |
| 7 | 104-2189 | 1 | Plug-Thread, Straight |
| 9 | 104-5305 | 16 | Screw-HHF |
| 14 | 106-8677 | 1 | Ring-Retaining, External |
| 15 | 106-8678 | 1 | Rod-Bypass |
| 16 | 106-8679 | 1 | Ring-Retaining, Internal |
| 19 | 104-5304 | 1 | Swashplate-Trunnion |
| 21 | 104-2116 | 1 | Stud |
| 22 | 112-9853 | 1 | Puck-Friction |
| 27 | 94-1936 | 1 | Spring-Block |
| 28 | 120-5538 | 1 | Washer |
| 29 | 104-5306 | 1 | Shaft-Input |
| 30 | 104-5311 | 1 | Bearing-Ball |
| 31 | 104-5307 | 1 | Ring-Retaining |
| 32 | 104-5308 | 1 | Spacer |
| 33 | 104-5310 | 1 | Seal-Lip |
| 34 | 104-5309 | 2 | Ring-Retaining |
| 35 | 94-6922 | 2 | Bearing-Thrust |
| 36 | 104-5339 | 1 | Washer-Flat |
| 37 | 104-5340 | 1 | Ring-Retaining |
| 38 | 104-5316 | 1 | Gear-Pinnion, 13T |
| 39 | 106-8683 | 1 | Shaft-Motor |
| 40 | 104-5360 | 1 | Washer |
| 41 | 119-5541 | 2 | Washer |
| 42 | 104-5317 | 1 | Gear-10T/48T |
| 43 | 104-5318 | 1 | Gear-Jackshaft, 10T |
| 44 | 104-5329 | 1 | Pin-Jackshaft |
| 45 | 112-9854 | 1 | Ring-Spiral, Retaining |
| 46 | 112-9855 | 1 | Gear-52T, Bull |
| 47 | 112-9856 | 1 | Washer |
| 48 | 112-9857 | 1 | Bearing-Sleeve |
| 49 | 120-7104 | 1 | Shaft-Axle |
| 50 | 112-9859 | 1 | Bushing-Axle |
| 51 | 112-9860 | 1 | Seal-Lip |
| 52 | 106-8686 | 1 | Seal Kit |
| 53 | 106-8697 | 1 | Expansion Plate Kit |
| 54 | 135-7349 | 1 | Fan And Pulley Kit |
| 54:1 | 116-9714 | 1 | Nut-HJ |
| 54:2 | 116-9708 | 1 | Washer-Slotted |
| 54:4 | 135-7364 | 1 | Fan 7.0 X 10 Blade |
| 55 | 106-8688 | 1 | Brake Arm Kit |
| 57 | 112-9862 | 1 | Center Section Filter Kit |
| 58 | 104-2147 | 1 | Sealant |
| 59 | 107-2489 | 1 | Bypass Arm Kit |
| 61 | 114-1634 | 1 | Filter Kit |
| 98 | 120-7109 | 1 | Tube-Axle |
| 100 | 106-8694 | 1 | Disc-Brake, Cog |
| 101 | 115-5057 | 1 | Cover-Nut, Axle |
| 124 | 109-5939 | 1 | Hub Kit |
| 138 | 112-9866 | 1 | Breather Kit |
| 139 | 114-1635 | 1 | Breather ASM |
| 200 | 117-5362 | 1 | Control Arm Kit |
| 209 | 114-8467 | 1 | Puller-Hub, 4 Bolt |

# Brake Assembly

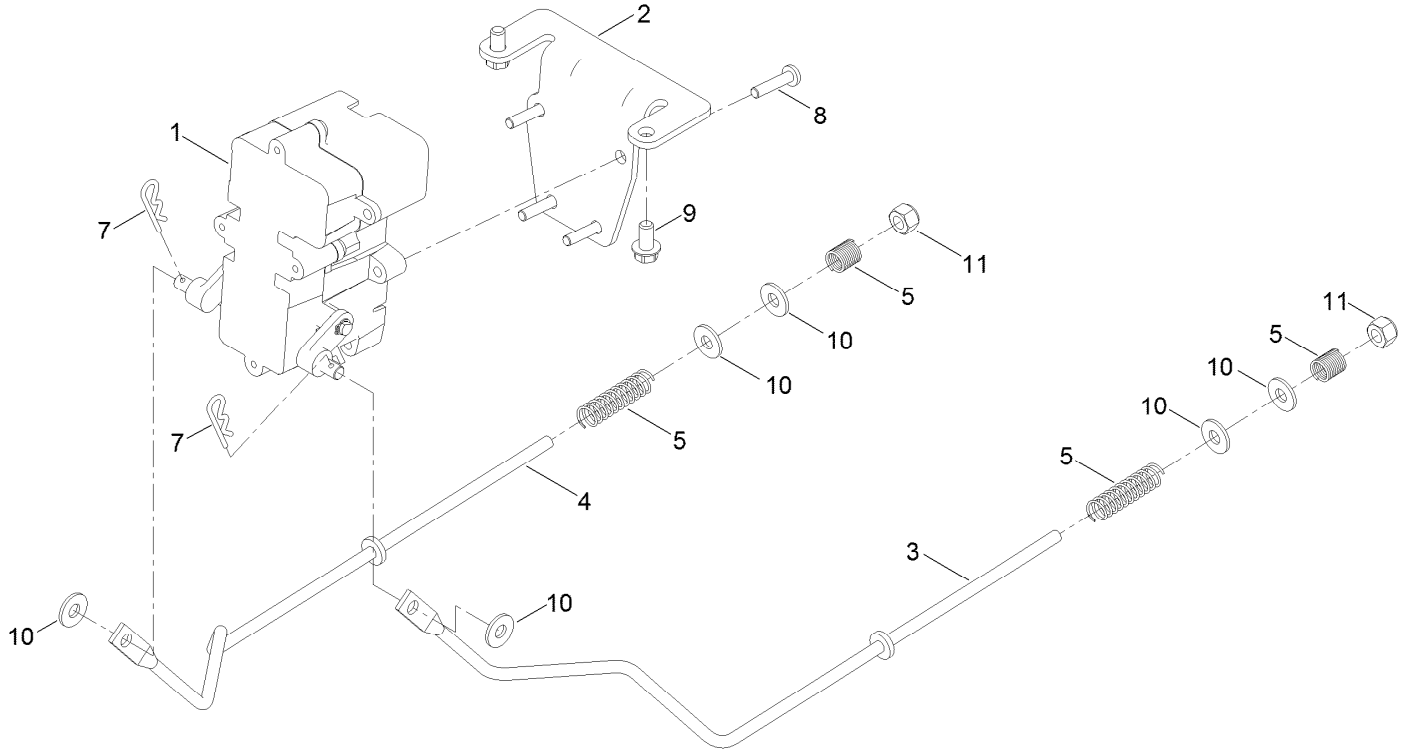

# Brake Assembly (continued)

| Ref. | Part Number | Qty. | Description |
|---|---|---|---|
| 1 | 138-2514 | 1 | Brake Box ASM |
| 2 | 133-9284-03 | 1 | Bracket-Mount, Brake |
| 3 | 138-2591 | 1 | Rod-Brake, LH |
| 4 | 138-2592 | 1 | Rod-Brake, RH |
| 5 | 117-1169 | 4 | Spring-Compression |
| 7 | 3290-307 | 2 | Pin-Cotter |
| 8 | 32144-36 | 4 | Screw-PPH |
| 9 | 32144-4 | 2 | Screw-HWH |
| 10 | 119-8952 | 6 | Washer |
| 11 | 3296-42 | 2 | Nut-Lock, NI |

# Rear Tire Assembly

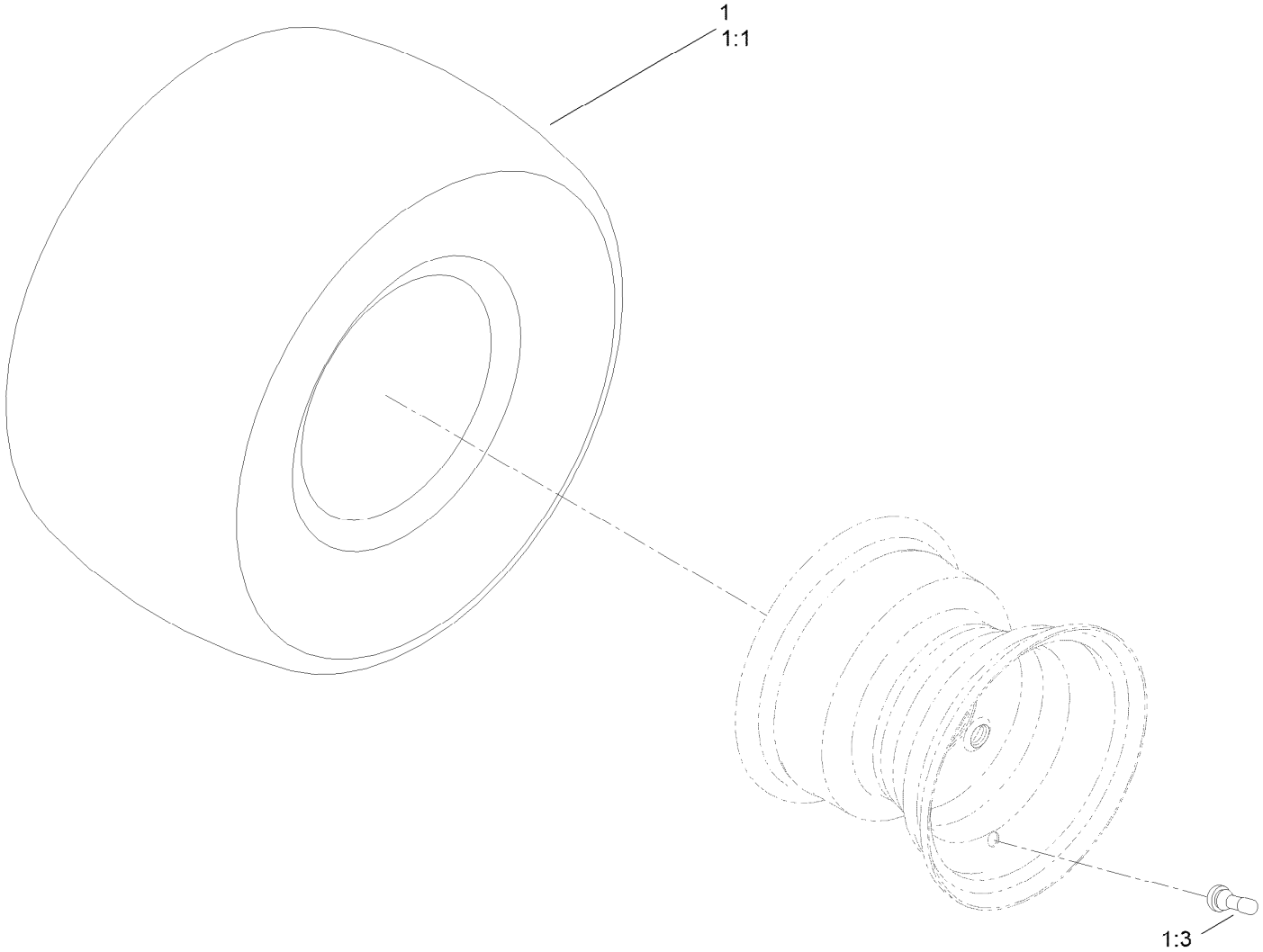

# Rear Tire Assembly (continued)

| Ref. | Part Number | Qty. | Description |
|---|---|---|---|
| 1 | 139-5847 | 2 | Tire ASM |
| 1:1 | 120-6451 | 1 | Tire |
| 1:3 | 232-27 | 1 | Stem-Valve |
| 1:99 | 232-37 | 1 | Tube ● |

● Not illustrated

# Motion Control Assembly

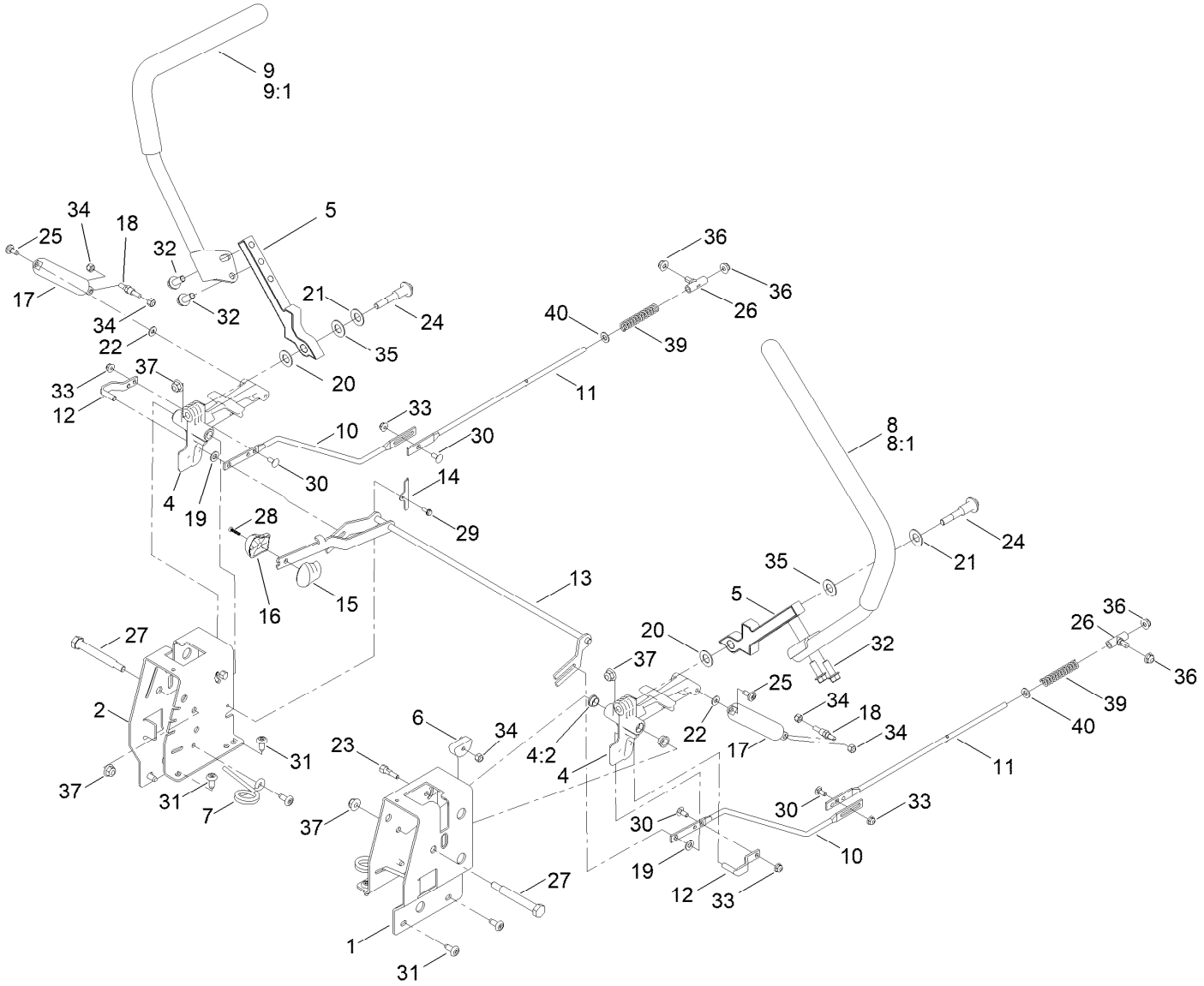

# Motion Control Assembly (continued)

| Ref. | Part Number | Qty. | Description |
|---|---|---|---|
| 1 | 138-7598-03 | 1 | Plate-Control Box, LH |
| 2 | 138-7599-03 | 1 | Plate-Control Box, RH |
| 4 | 119-3470 | 2 | Actuator Arm ASM |
| 4:2 | 256-156 | 2 | Bushing-Flange |
| 5 | 133-9299-05 | 2 | Arm-Control |
| 6 | 139-5803 | 2 | Eccentric |
| 7 | 138-7539 | 2 | Spring-Torsion |
| 8 | 133-7055 | 1 | Handle-Control, LH |
| 8:1 | 121-0726 | 1 | Grip |
| 9 | 133-7057 | 1 | Handle-Control, RH |
| 9:1 | 121-0726 | 1 | Grip |
| 10 | 138-2580 | 2 | Rod-Hydro, Front |
| 11 | 144-1818 | 2 | Rod-Hydro, Rear |
| 12 | 121-1753 | 2 | Pin-Rod, Hydro |
| 13 | 138-9750 | 1 | Speed Control ASM |
| 14 | 138-7541 | 2 | Plate-Retainer |
| 15 | 132-9368 | 1 | Knob-RH |
| 16 | 132-9369 | 1 | Knob-LH |
| 17 | 132-6853 | 2 | Damper-Non Cavitating |
| 18 | 138-7215 | 2 | Stud-Damper |
| 19 | 93-6079 | 2 | Spacer-Nylon |

| Ref. | Part Number | Qty. | Description |
|---|---|---|---|
| 20 | 120-2273 | 2 | Washer-Nylon |
| 21 | 119-8925 | 2 | Washer-Belleville |
| 22 | 119-8952 | 2 | Washer |
| 23 | 139-5811 | 2 | Bolt-Pivot, Eccentric |
| 24 | 117-1198 | 2 | Bolt-Pivot |
| 25 | 120-7950 | 2 | Screw-Torx |
| 26 | 138-7218 | 2 | Mount-Rod, Hydro |
| 27 | 115-5099 | 2 | Bolt-Pivot |
| 28 | 94-4496 | 1 | Screw-PPH |
| 29 | 32144-1 | 2 | Screw-Taptite |
| 30 | 3229-11 | 4 | Screw-CARR |
| 31 | 138-9753 | 10 | Screw |
| 32 | 3234-42 | 4 | Screw-HHF |
| 33 | 104-7201 | 4 | Nut-HF, NI |
| 34 | 3296-42 | 6 | Nut-Lock, NI |
| 35 | 117-1240 | 2 | Washer |
| 36 | 119-4041 | 2 | Nut-HF |
| 37 | 104-8301 | 4 | Nut-HF, NI |
| 39 | 138-7252 | 2 | Spring-Compression |
| 40 | 120-9683 | 2 | Washer-Plain |

# Engine and Muffler Assembly

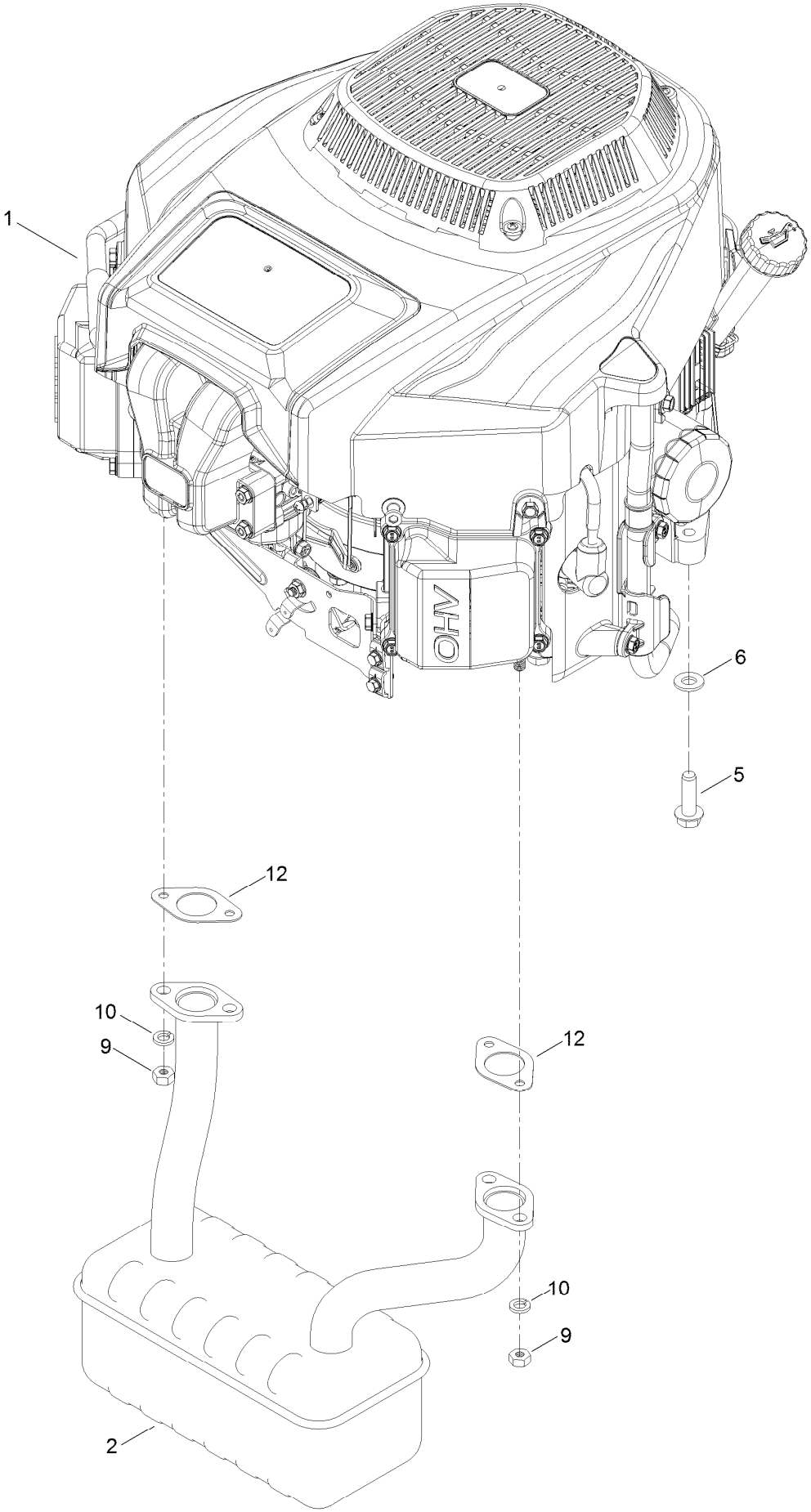

# Engine and Muffler Assembly (continued)

| Ref. | Part Number | Qty. | Description |
|---|---|---|---|
| 1 | 139-0603 | 1 | Engine-2P77F |
| 2 | 139-5865 | 1 | Muffler |
| 5 | 32144-109 | 4 | Screw-Thd |
| 6 | 3256-24 | 3 | Washer-Flat |
| 9 | 121-0199 | 4 | Nut-HH |
| 10 | 127-9279 | 4 | Washer-Lock, Split |
| 12 | 120-4317 | 2 | Gasket-Exhaust |

# Fuel System Assembly

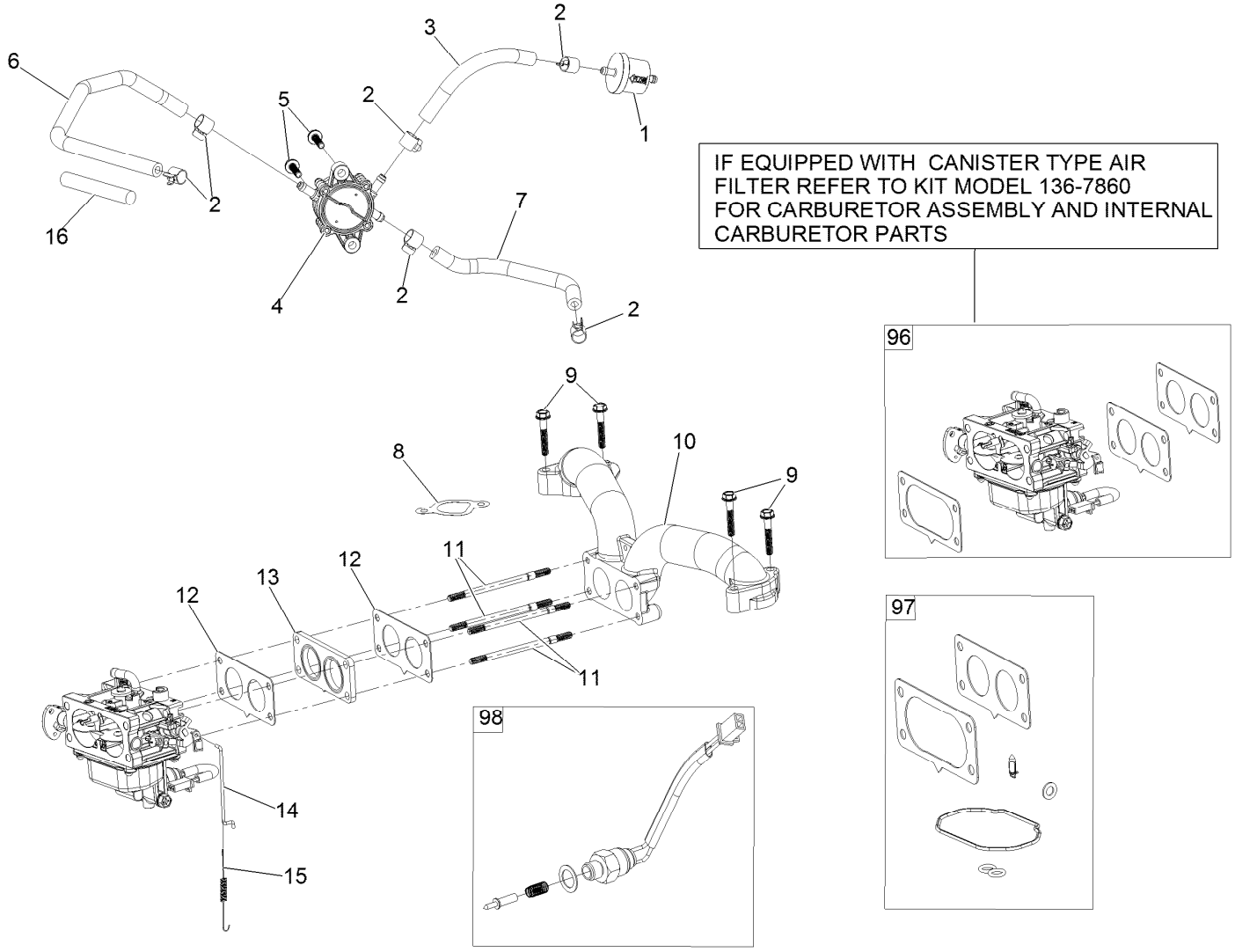

# Fuel System Assembly (continued)

| Ref. | Part Number | Qty. | Description |
|---|---|---|---|
| 1 | 139-0717 | 1 | Filter-Fuel |
| 2 | 139-0719 | 6 | Clamp-Fuel Hose |
| 3 | 120-4371 | 1 | Line-Fuel |
| 4 | 139-0684 | 1 | Pump-Fuel |
| 5 | 120-4225 | 2 | Screw-HHF |
| 6 | 127-9205 | 1 | Hose-Fuel |
| 7 | 127-9207 | 1 | Hose-Fuel |
| 8 | 127-9230 | 2 | Gasket-Intake |
| 9 | 120-4284 | 4 | Screw-HHF |
| 10 | 127-9244 | 1 | Manifold-Intake |
| 11 | 127-9245 | 4 | Stud |
| 12 | 127-9246 | 2 | Gasket-Carburetor |
| 13 | 127-9247 | 1 | Insulator-Carburetor |
| 14 | 133-9963 | 1 | Linkage-Throttle |
| 15 | 133-9964 | 1 | Spring-Return, Throttle |
| 16 | 127-9355 | 1 | Sleeve-Fuel Line Protector |
| 96 | 136-7840 | 1 | Carburetor Replacement Kit |
| 97 | 127-9290 | 1 | Carburetor Repair Kit |
| 98 | 127-9292 | 1 | Solenoid Kit |
| 99 | 136-7837 | 1 | High Altitude Kit ● |

● Not illustrated

# Carburetor Assembly

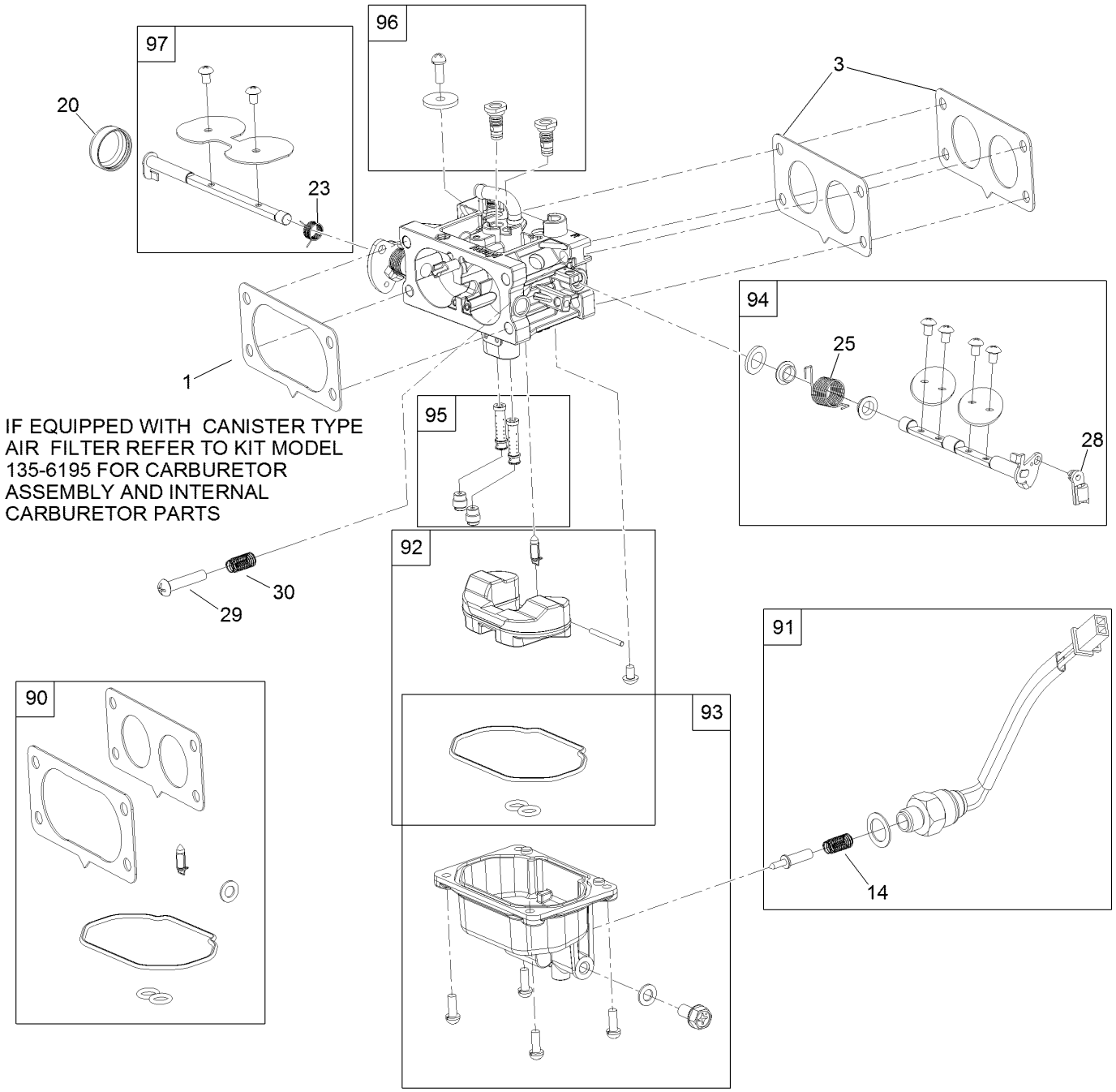

# Carburetor Assembly (continued)

| Ref. | Part Number | Qty. | Description |
|---|---|---|---|
| 1 | 127-9251 | 1 | Gasket-Carburetor |
| 3 | 127-9246 | 2 | Gasket-Carburetor |
| 14 | 127-9319 | 1 | Spring |
| 20 | 127-9325 | 1 | Cover-Shaft, Choke |
| 23 | 127-9328 | 1 | Spring |
| 25 | 127-9330 | 1 | Spring |
| 28 | 127-9333 | 1 | Clamp-Lock |
| 29 | 127-9334 | 1 | Screw-PPH |
| 30 | 127-9335 | 1 | Spring |

| Ref. | Part Number | Qty. | Description |
|---|---|---|---|
| 90 | 127-9290 | 1 | Carburetor Repair Kit |
| 91 | 127-9292 | 1 | Solenoid Kit |
| 92 | 127-9340 | 1 | Float Kit |
| 93 | 127-9341 | 1 | Bowl Kit |
| 94 | 133-9817 | 1 | Throttle Shaft Kit |
| 95 | 136-7844 | 1 | Nozzle And Jet Kit |
| 96 | 136-7899 | 1 | Idle Jet Kit |
| 97 | 127-9345 | 1 | Choke Shaft Kit |

# Air Intake and Filtration Assembly

IF EQUIPPED WITH CANISTER TYPE AIR FILTER
REFER TO KIT MODEL 135-6195 TO LOOK UP PARTS

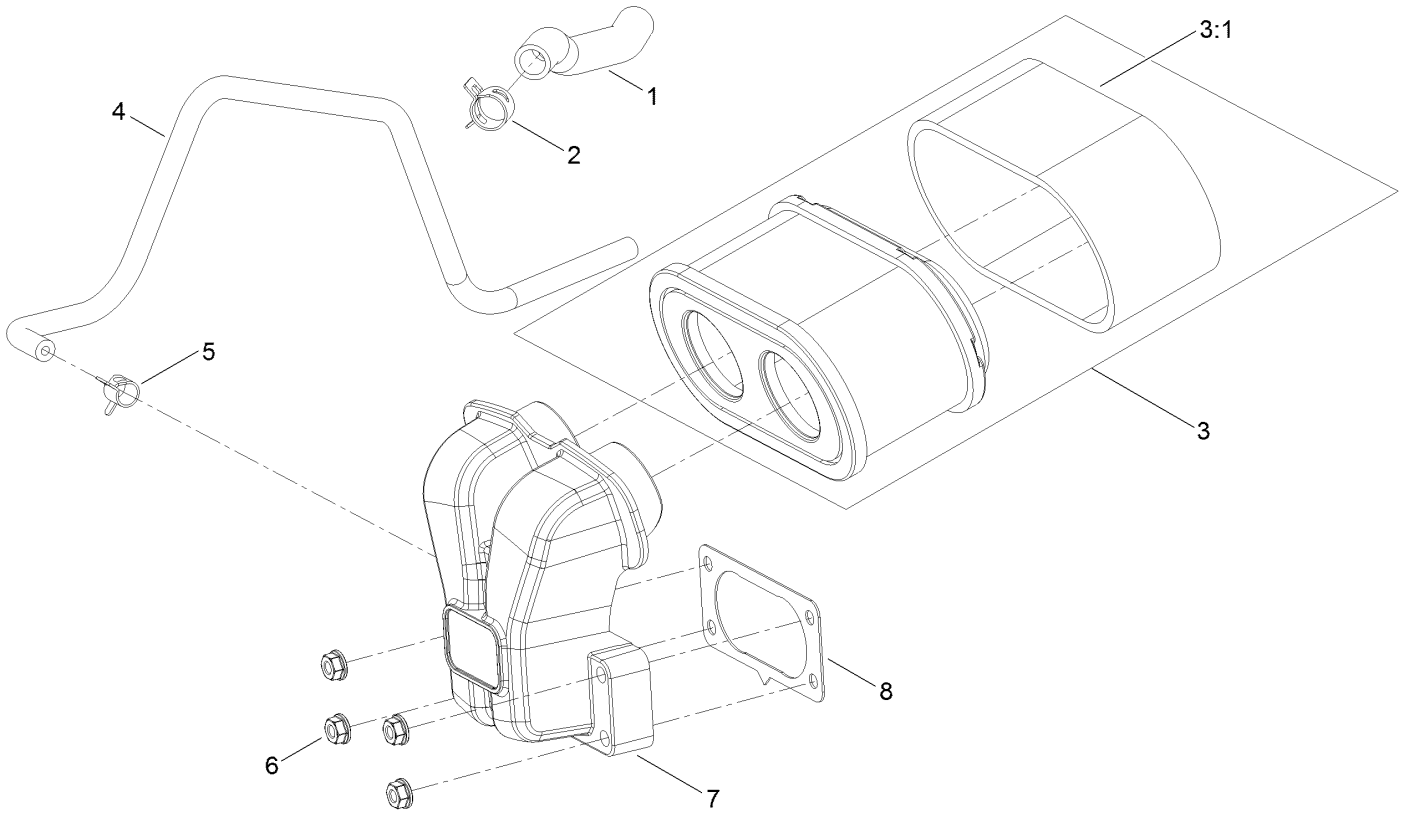

# Air Intake and Filtration Assembly (continued)

| Ref. | Part Number | Qty. | Description |
|---|---|---|---|
| 1 | 127-9235 | 1 | Tube-Breather |
| 2 | 127-9234 | 2 | Clamp-Hose |
| 3 | 136-7806 | 1 | Air Filter Kit |
| 3:1 | 136-7804 | 1 | Prefilter |
| 4 | 127-9253 | 1 | Hose-Fuel |
| 5 | 127-9187 | 1 | Clamp-Hose |
| 6 | 120-4236 | 4 | Nut-Flange |
| 7 | 127-9047 | 1 | Manifold-Filter, Air |
| 8 | 127-9251 | 1 | Gasket-Carburetor |

# Ignition and Cooling Fan Assembly

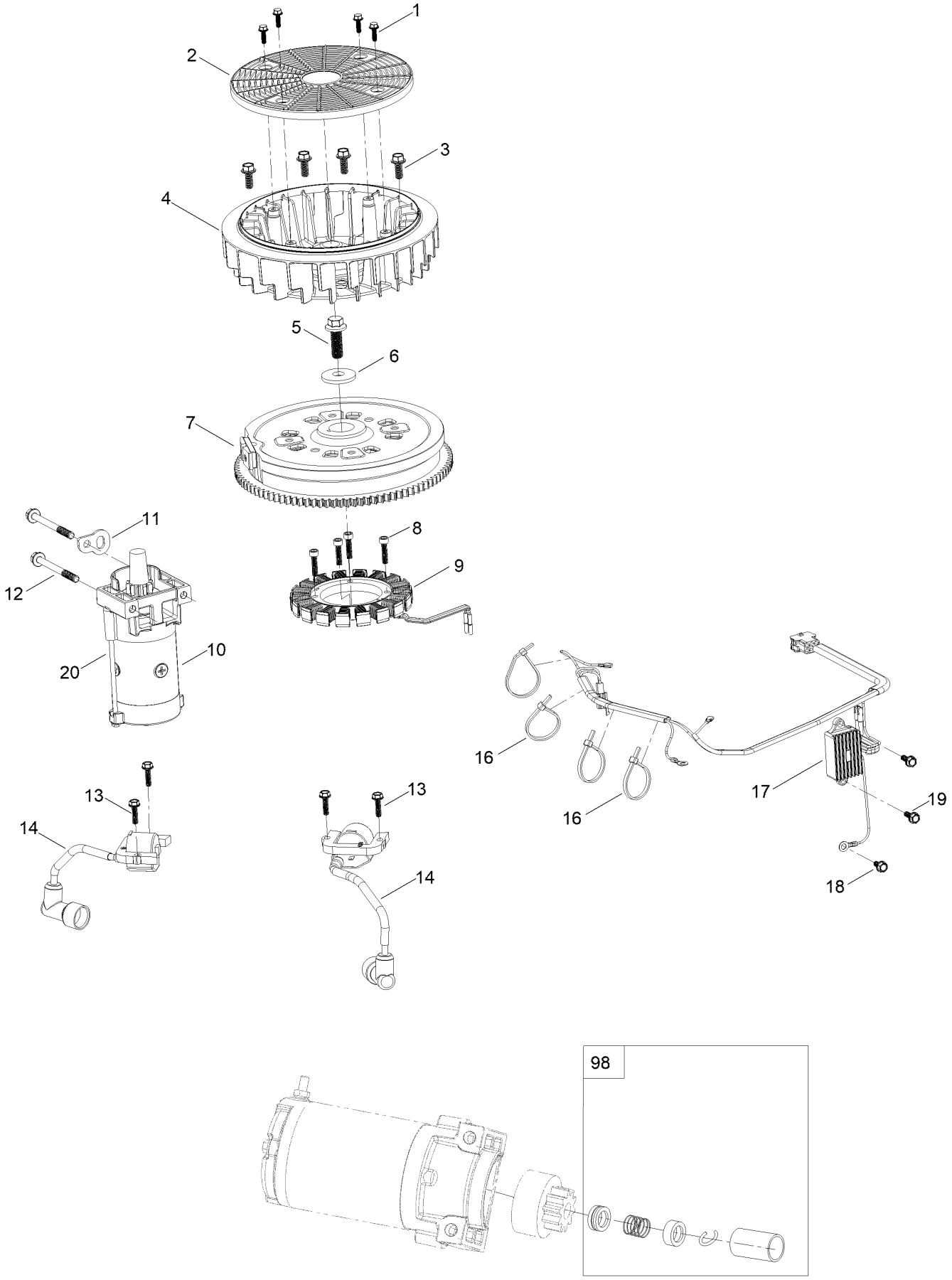

# Ignition and Cooling Fan Assembly (continued)

| Ref. | Part Number | Qty. | Description |
|---|---|---|---|
| 1 | 127-9197 | 4 | Screw-HWH |
| 2 | 127-9198 | 1 | Screen-Rotating |
| 3 | 127-9199 | 4 | Screw-HWH |
| 4 | 127-9200 | 1 | Fan-Cooling |
| 5 | 127-9201 | 1 | Screw-HWH |
| 6 | 127-9202 | 1 | Washer-Spring |
| 7 | 127-9306 | 1 | Flywheel |
| 8 | 127-9210 | 4 | Screw-HSH |
| 9 | 136-7876 | 1 | Alternator |
| 10 | 136-7880 | 1 | Motor-Starter |
| 11 | 127-9208 | 1 | Bracket-Lift |
| 12 | 120-4231 | 2 | Screw-HHF |
| 13 | 121-0007 | 4 | Bolt-Flange |
| 14 | 139-0720 | 2 | Ignition Coil ASM |
| 16 | 127-9220 | 4 | Tie-Zip |
| 17 | 136-7879 | 1 | Regulator-Voltage, W/Harness |
| 18 | 120-4216 | 1 | Screw-HHF |
| 19 | 120-4232 | 2 | Screw-HHF |
| 20 | 133-1562 | 1 | Pinion-Starter |
| 98 | 133-1566 | 1 | Starter Repair Kit |

# Crankcase and Crankshaft Assembly

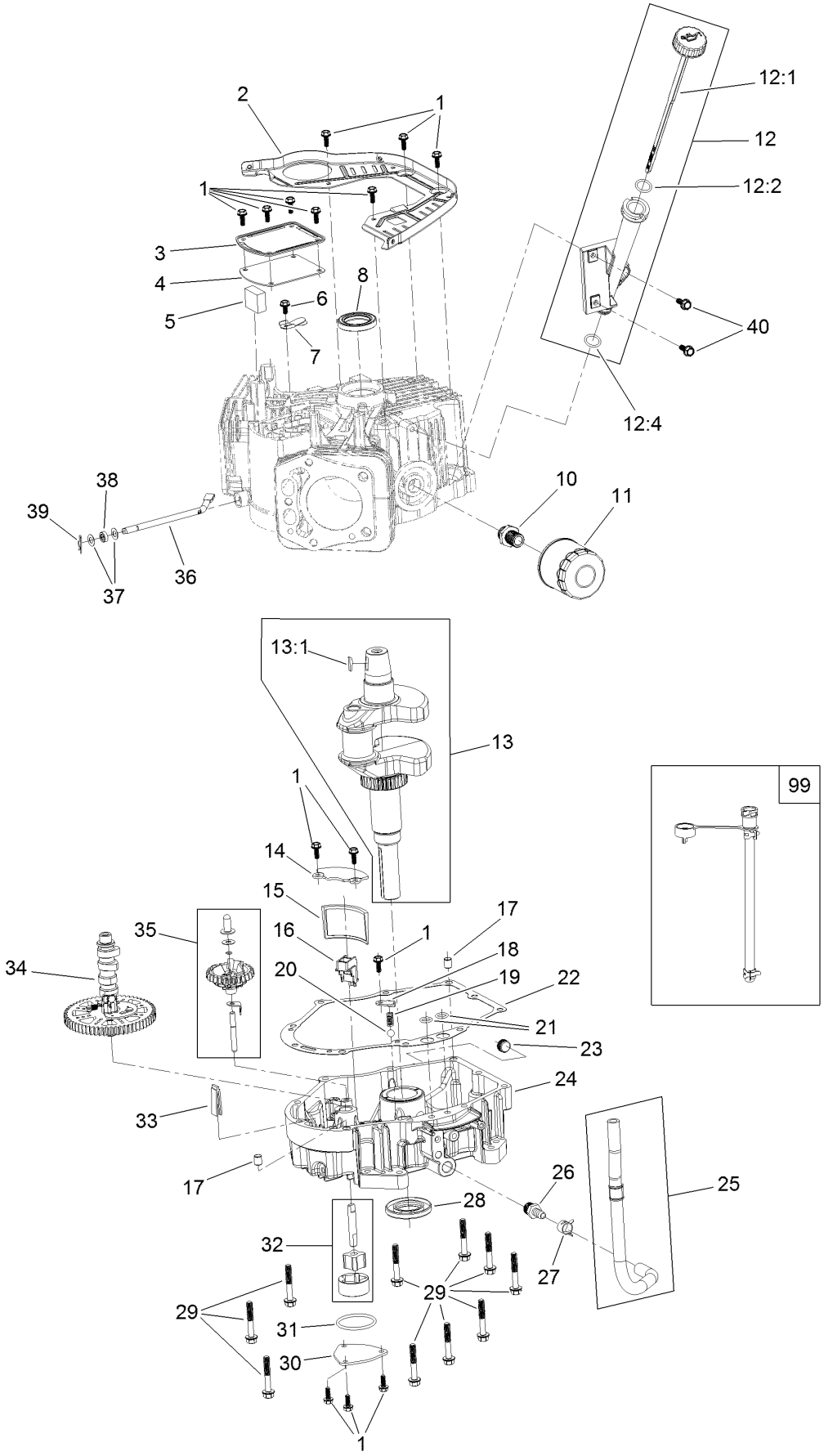

# Crankcase and Crankshaft Assembly (continued)

| Ref. | Part Number | Qty. | Description |
|---|---|---|---|
| 1 | 120-4232 | 14 | Screw-HHF |
| 2 | 127-9212 | 1 | Baffle |
| 3 | 127-9213 | 1 | Cover-Breather |
| 4 | 127-9214 | 1 | Gasket-Breather |
| 5 | 127-9215 | 1 | Filter-Breather |
| 6 | 120-4216 | 1 | Screw-HHF |
| 7 | 127-9217 | 1 | Valve-Breather |
| 8 | 120-4267 | 1 | Seal-Oil |
| 10 | 136-7884 | 1 | Adaptor-Filter, Oil |
| 11 | 136-7848 | 1 | Filter-Oil |
| 12 | 127-9218 | 1 | Oil Tube ASM |
| 12:1 | 127-9283 | 1 | Dipstick |
| 12:2 | 127-9284 | 1 | O-Ring |
| 12:4 | 127-9286 | 1 | O-Ring |
| 13 | 127-9255 | 1 | Crankshaft |
| 13:1 | 120-4320 | 1 | Key-Woodruff |
| 14 | 127-9261 | 1 | Cover-Screen, Oil |
| 15 | 127-9262 | 1 | Screen-Oil |
| 16 | 127-9263 | 1 | Retainer-Screen |
| 17 | 120-4274 | 2 | Pin-Dowel |
| 18 | 127-9264 | 1 | Plate-Retainer |
| 19 | 127-9265 | 1 | Spring |
| 20 | 127-9266 | 1 | Valve-Ball |
| 21 | 120-4262 | 2 | O-Ring |
| 22 | 127-9267 | 1 | Gasket-Cover, Crankcase |
| 23 | 133-9805 | 1 | Plug-Drain |
| 24 | 133-9806 | 1 | Cover-Crankcase |
| 25 | 127-9293 | 1 | Oil Drain Hose ASM |
| 26 | 127-9275 | 1 | Fitting-Hose |
| 27 | 127-9276 | 1 | Clamp-Hose |
| 28 | 127-9271 | 1 | Seal |
| 29 | 121-0473 | 10 | Screw-HHF |
| 30 | 127-9274 | 1 | Cover-Oil Pump |
| 31 | 127-9273 | 1 | O-Ring |
| 32 | 127-9272 | 1 | Oil Pump ASM |
| 33 | 120-4275 | 1 | Deflector-Oil, Rubber |
| 34 | 133-1568 | 1 | Camshaft |
| 35 | 136-7882 | 1 | Governor ASM |
| 36 | 127-9238 | 1 | Shaft-Governor |
| 37 | 120-4258 | 2 | Washer-Plain |
| 38 | 120-4257 | 1 | Seal-Oil |
| 39 | 120-4256 | 1 | Pin-Hair |
| 40 | 120-4232 | 2 | Screw-HHF |
| 99 | 144-0976 | 1 | Oil Drain Service Kit |

# Governor Control Assembly

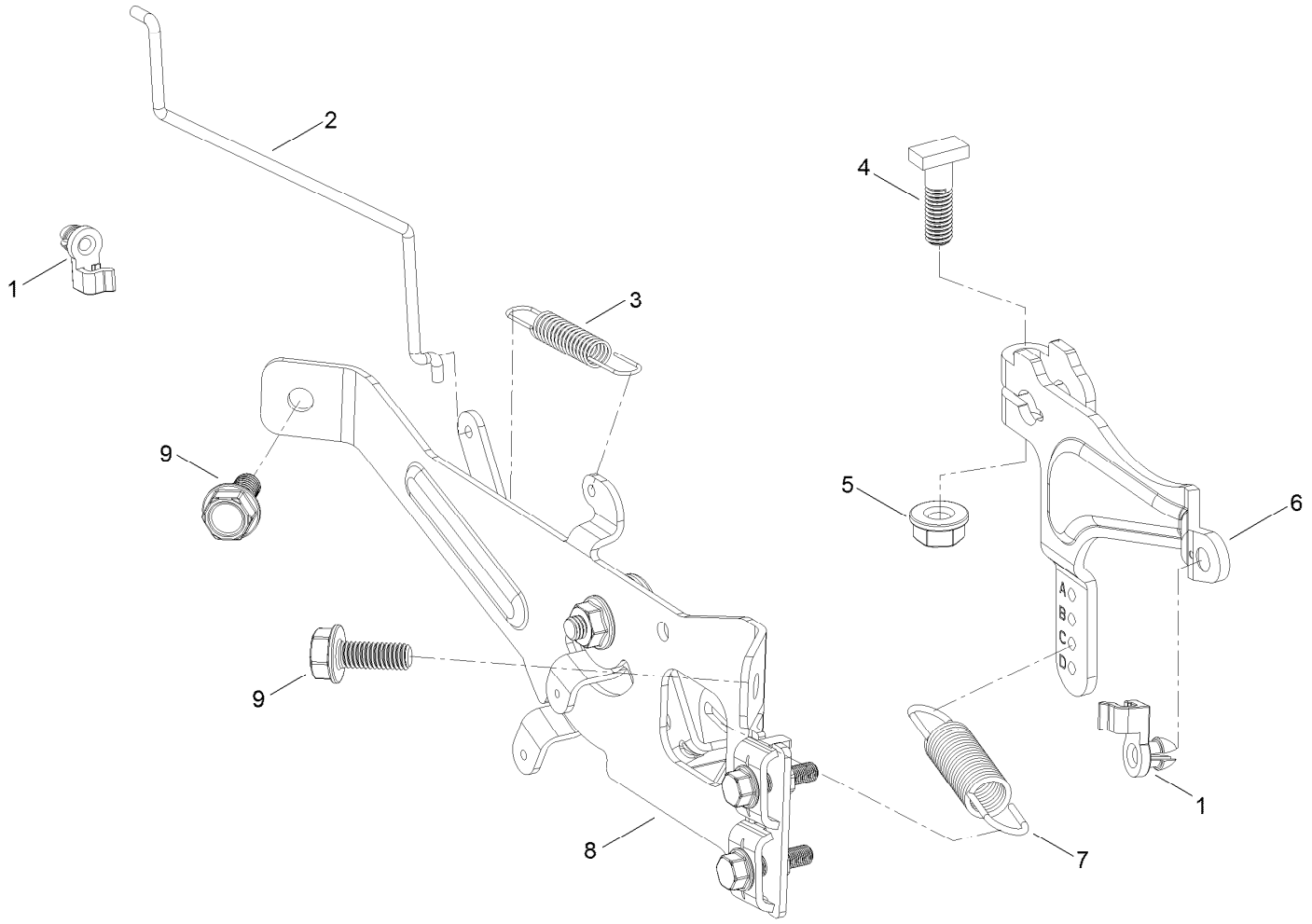

# Governor Control Assembly (continued)

| Ref. | Part Number | Qty. | Description |
|---|---|---|---|
| 1 | 127-9250 | 2 | Clip-Linkage |
| 2 | 127-9242 | 1 | Linkage-Choke |
| 3 | 127-9241 | 1 | Spring-Governor |
| 4 | 120-4238 | 1 | Bolt-Arm, Governor |
| 5 | 120-4236 | 1 | Nut-Flange |
| 6 | 133-9961 | 1 | Arm-Governor |
| 7 | 133-9962 | 1 | Spring-Governor |
| 8 | 133-1570 | 1 | Control Plate ASM |
| 9 | 120-4232 | 2 | Screw-HHF |

# Piston and Cylinder Head Assembly

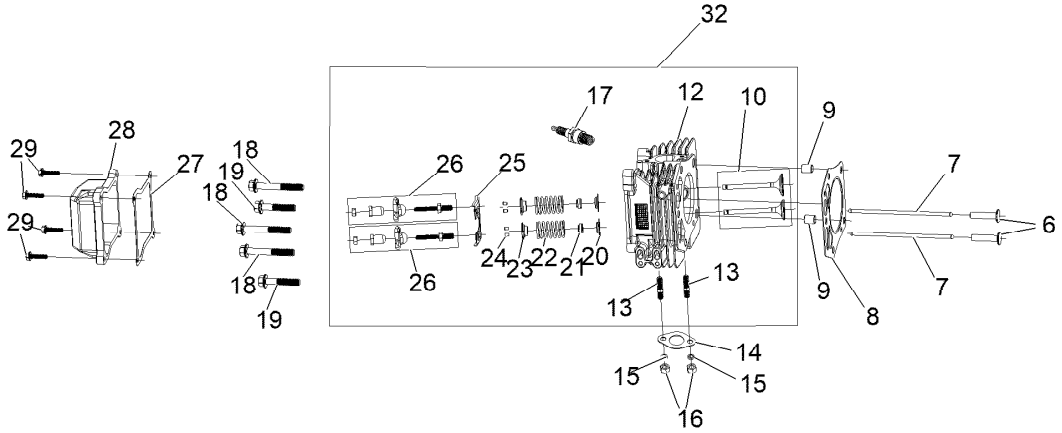


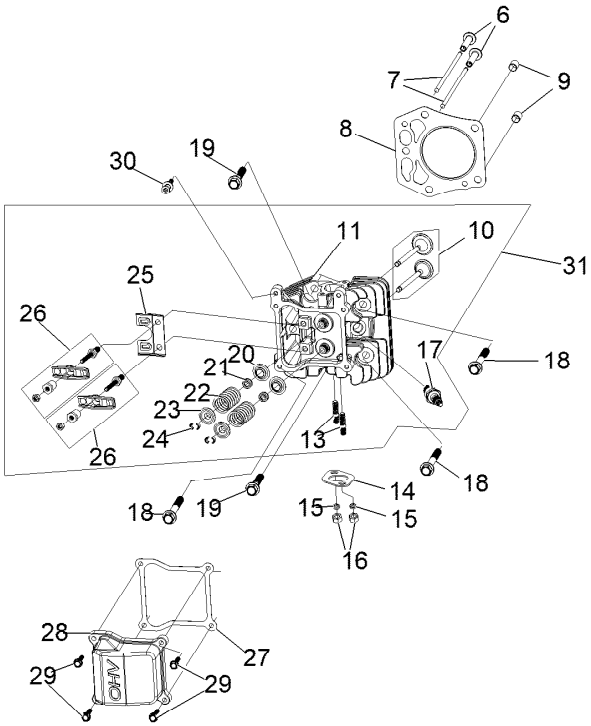


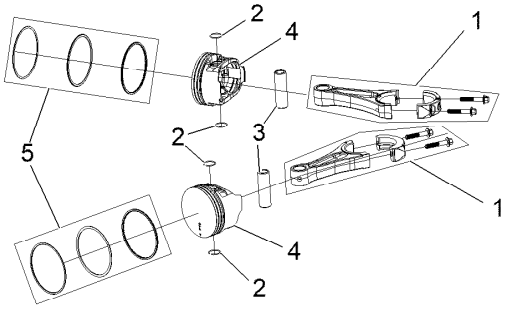

# Piston and Cylinder Head Assembly (continued)

| Ref. | Part Number | Qty. | Description |
|---|---|---|---|
| 1 | 127-9256 | 2 | Connecting Rod ASM |
| 2 | 127-9258 | 4 | Clip-Pin, Piston |
| 3 | 127-9257 | 2 | Pin-Piston |
| 4 | 127-9259 | 2 | Piston |
| 5 | 127-9260 | 2 | Piston Ring Set |
| 6 | 127-9224 | 4 | Lifter-Valve |
| 7 | 127-9225 | 4 | Rod-Push |
| 8 | 127-9226 | 2 | Gasket-Head, Cylinder |
| 9 | 127-9227 | 4 | Pin-Dowel |
| 10 | 127-9228 | 2 | Valve Set |
| 11 | 133-9802 | 1 | Head-Cylinder, Right |
| 12 | 133-9804 | 1 | Head-Cylinder, Left |
| 13 | 121-0464 | 4 | Stud-Exhaust |
| 14 | 120-4317 | 2 | Gasket-Exhaust |
| 15 | 127-9279 | 4 | Washer-Lock, Split |
| 16 | 121-0199 | 4 | Nut-HH |
| 17 | 81-3250 | 2 | Spark Plug |
| 18 | 127-9231 | 6 | Screw-HWH |
| 19 | 127-9232 | 4 | Screw-HWH |
| 20 | 120-4303 | 4 | Seat-Spring, Valve |
| 21 | 120-4304 | 4 | Seal-Stem, Valve |
| 22 | 120-4305 | 4 | Spring-Valve |
| 23 | 120-4306 | 4 | Retainer-Spring, Valve |
| 24 | 120-4307 | 8 | Keeper-Valve |
| 25 | 127-9233 | 2 | Plate-Guide, Push Rod |
| 26 | 136-7881 | 4 | Rocker Arm ASM |
| 27 | 127-9295 | 2 | Gasket-Valve Cover |
| 28 | 127-9050 | 2 | Cover-Valve |
| 29 | 120-4225 | 8 | Screw-HHF |
| 30 | 120-4214 | 1 | Screw-Shoulder, HH |
| 31 | 136-7891 | 1 | Complete Right Head ASM |
| 32 | 136-7892 | 1 | Complete Left Head ASM |

# Blower Housing Assembly

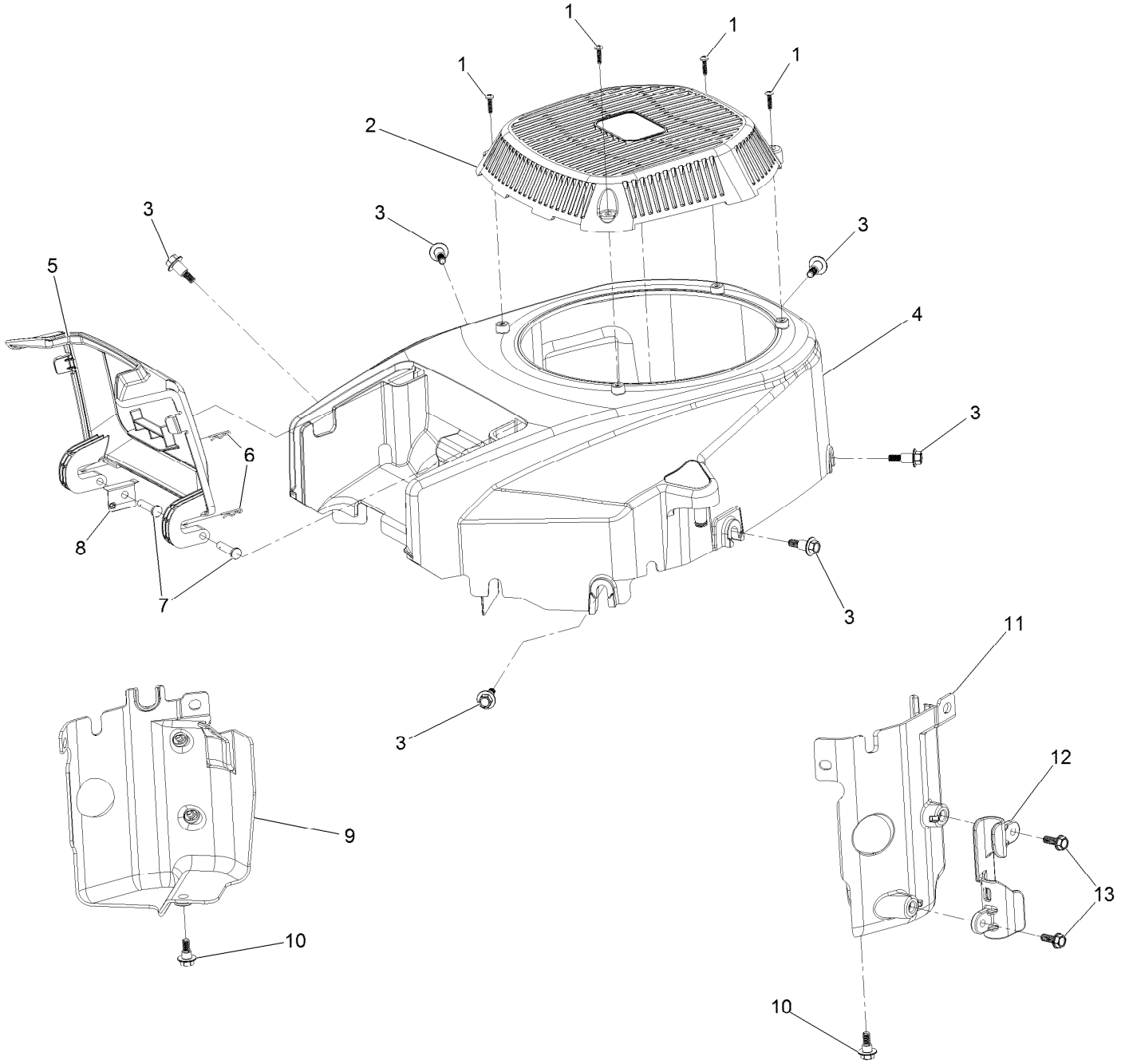

# Blower Housing Assembly (continued)

| Ref. | Part Number | Qty. | Description |
|---|---|---|---|
| 1 | 133-1571 | 4 | Screw-PPH, Plastic |
| 2 | 127-9045 | 1 | Cover-Fan |
| 3 | 127-9196 | 6 | Screw-Shoulder, HWH |
| 4 | 133-1572 | 1 | Shroud-Engine |
| 5 | 127-9046 | 1 | Door-Filter, Air |
| 6 | 127-9280 | 2 | Pin-Hair |
| 7 | 127-9282 | 2 | Pin |
| 8 | 127-9281 | 1 | Plate-Spring |
| 9 | 136-7877 | 1 | Baffle-Air, Left |
| 10 | 120-4210 | 2 | Screw-Shoulder, HHF |
| 11 | 136-7878 | 1 | Baffle-Air, Right |
| 12 | 127-9287 | 1 | Cleat-Hose |
| 13 | 120-4232 | 2 | Screw-HHF |

# Gasket and Seal Kit Assembly

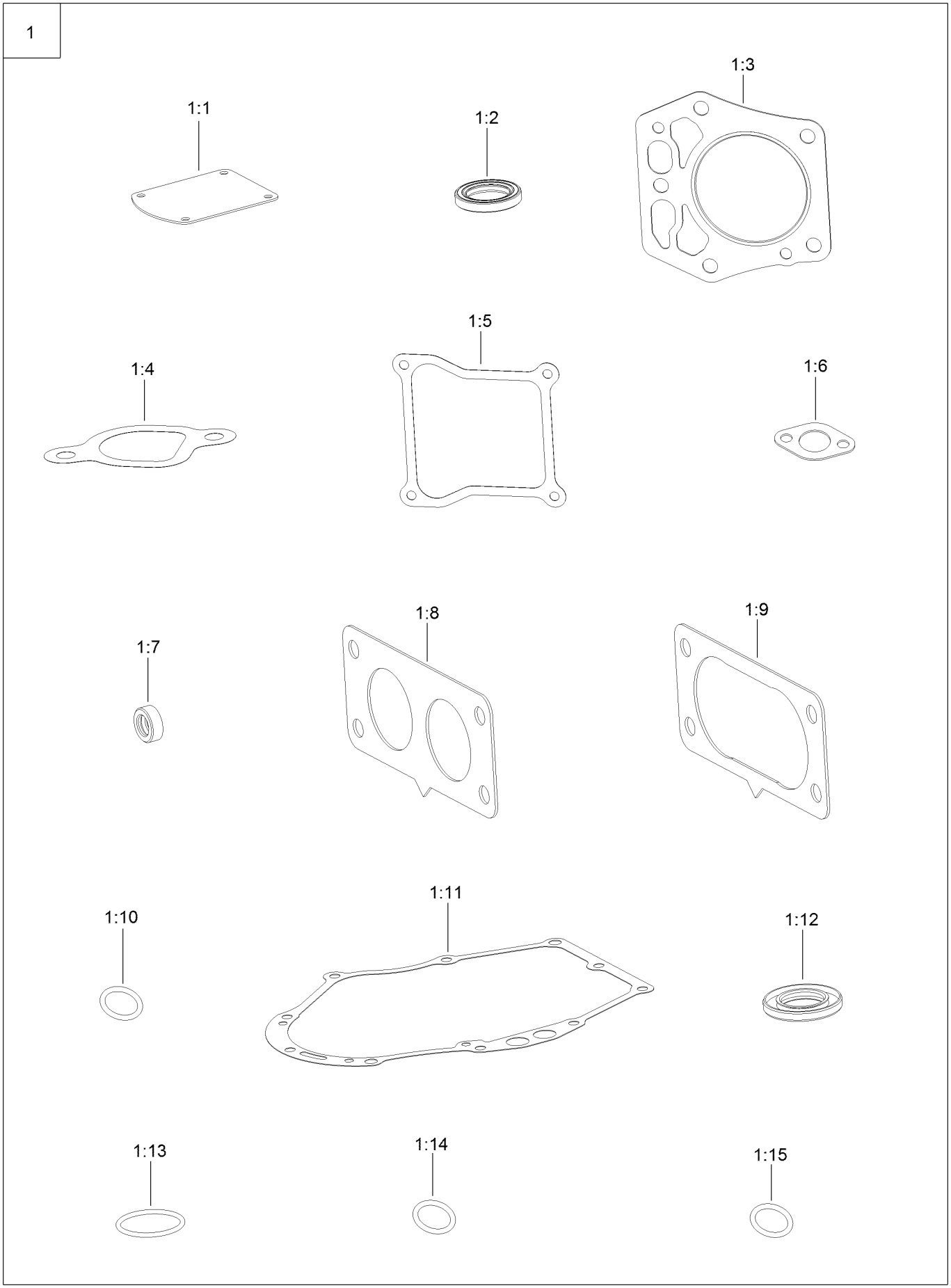

# Gasket and Seal Kit Assembly (continued)

| Ref. | Part Number | Qty. | Description |
|---|---|---|---|
| 1 | 127-9296 | 1 | Gasket And Seal Kit |
| 1:1 | 127-9214 | 1 | Gasket-Breather |
| 1:2 | 120-4267 | 1 | Seal-Oil |
| 1:3 | 127-9226 | 2 | Gasket-Head, Cylinder |
| 1:4 | 127-9230 | 2 | Gasket-Intake |
| 1:5 | 127-9295 | 2 | Gasket-Valve Cover |
| 1:6 | 120-4317 | 2 | Gasket-Exhaust |
| 1:7 | 120-4257 | 1 | Seal-Oil |
| 1:8 | 127-9246 | 2 | Gasket-Carburetor |
| 1:9 | 127-9251 | 1 | Gasket-Carburetor |
| 1:10 | 120-4262 | 2 | O-Ring |
| 1:11 | 127-9267 | 1 | Gasket-Cover, Crankcase |
| 1:12 | 127-9271 | 1 | Seal |
| 1:13 | 127-9273 | 1 | O-Ring |
| 1:14 | 127-9284 | 1 | O-Ring |
| 1:15 | 127-9286 | 1 | O-Ring |

# Body Styling and Fuel Pod Assembly

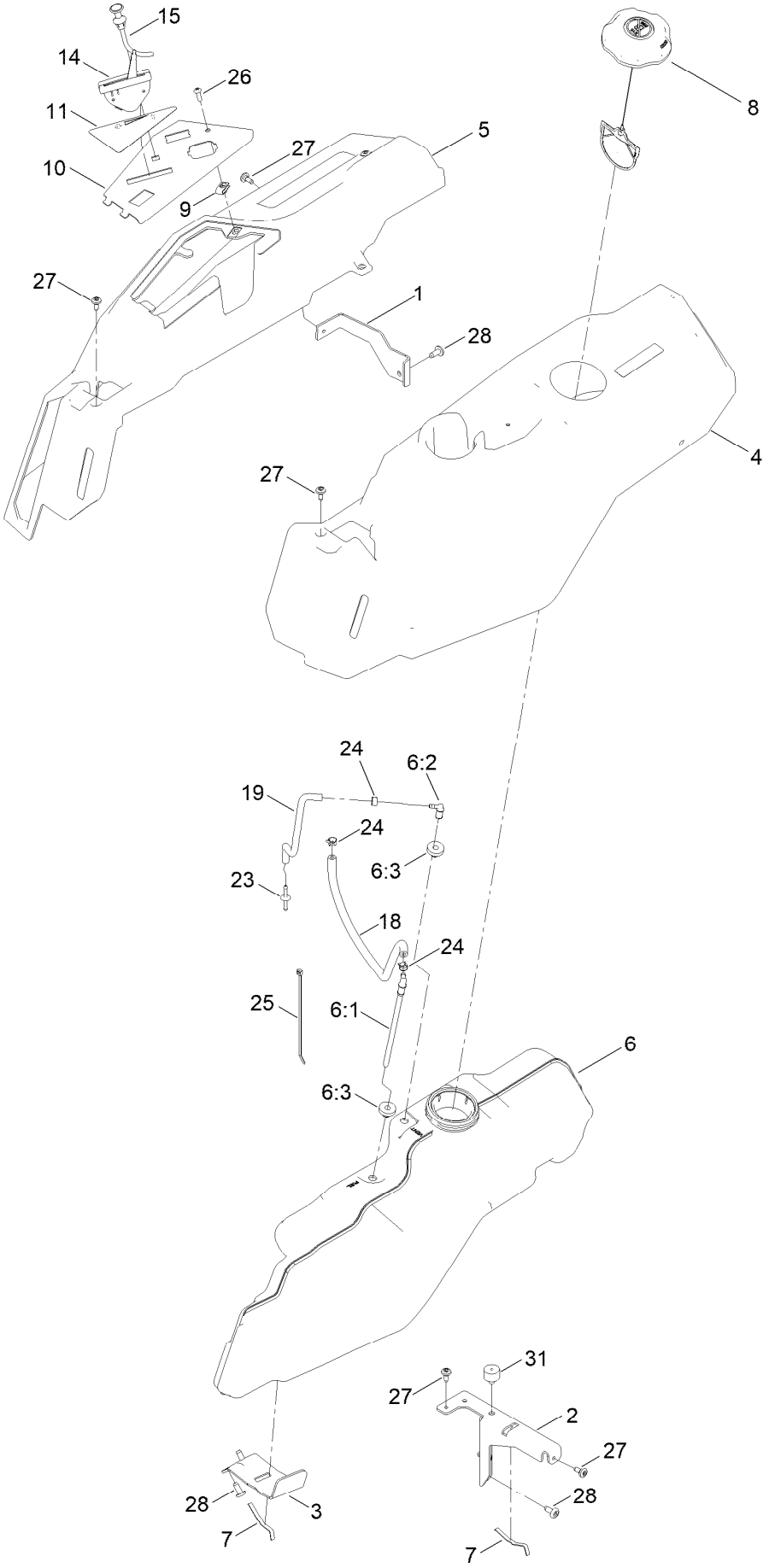

# Body Styling and Fuel Pod Assembly (continued)

| Ref. | Part Number | Qty. | Description |
|---|---|---|---|
| 1 | 138-9810-03 | 1 | Bracket-Pod |
| 2 | 138-6071-03 | 1 | Support-Pod, LH |
| 3 | 139-3271-03 | 1 | Support-Tank, Fuel |
| 4 | 138-6074 | 1 | Pod-LH |
| 5 | 139-2404 | 1 | Pod-RH, Myride |
| 6 | 144-5304 | 1 | Tank-Fuel ASM |
| 6:1 | 139-1091 | 1 | Connector-Elbow, 90 DEG |
| 6:2 | 144-5302 | 1 | Fitting-Elbow 90 |
| 6:3 | 46-6560 | 2 | Bushing |
| 7 | 609830 | 2 | Spring |
| 8 | 137-4119 | 1 | Cap-Fuel, Ratcheting |
| 9 | 107069 | 1 | Clip |
| 10 | 139-2380-03 | 1 | Panel - Control |
| 11 | 139-2391 | 1 | Decal-Panel, Control |
| 14 | 139-2403 | 1 | Cable-Throttle |
| 15 | 139-2402 | 1 | Cable-Choke |
| 18 | 108-4582 | 1 | Hose-Fuel |
| 19 | 136-6345 | 1 | Hose-Fuel |
| 23 | 144-1983 | 1 | Adapter Orifice |
| 24 | 2412-98 | 3 | Clamp-Hose |
| 25 | 614249 | 1 | Tie-Cable |
| 26 | 3258-166 | 1 | Screw-PRH |
| 27 | 120-7950 | 6 | Screw-Torx |
| 28 | 138-9753 | 5 | Screw |
| 31 | 120-7893 | 1 | Bumper-Grommet |

# Electrical Assembly

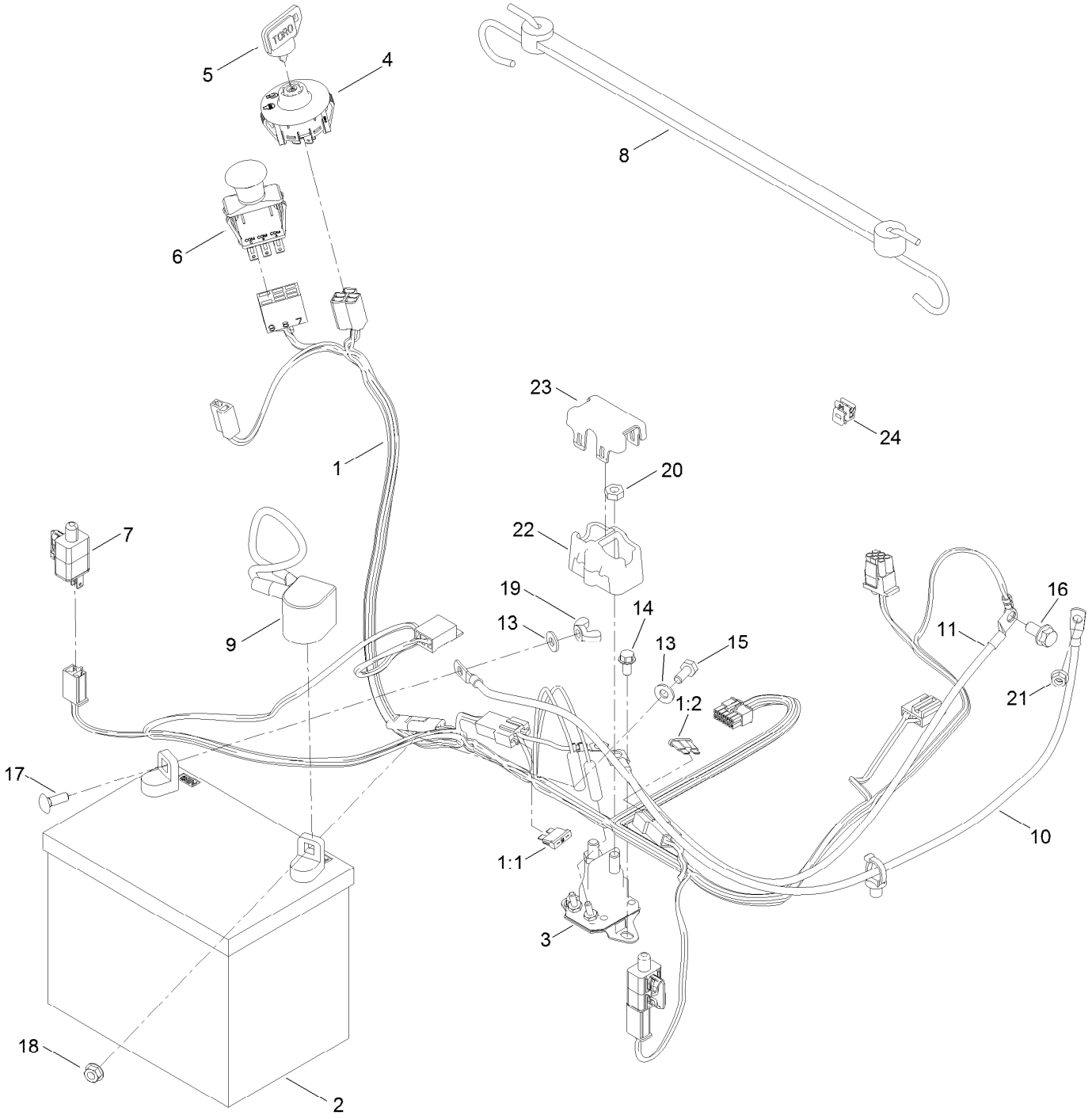

# Electrical Assembly (continued)

| Ref. | Part Number | Qty. | Description |
|---|---|---|---|
| 1 | 138-2521 | 1 | Harness-Wire |
| 1:1 | 109355 | 1 | Fuse-Blade, 15 Amp |
| 1:2 | 109102 | 1 | Fuse-Blade, 25 Amp |
| 2 | 105-1692 | 1 | Battery, 230CCA W/O Electrolyte |
| 3 | 117-1197 | 1 | Solenoid |
| 4 | 137-4100 | 1 | Switch-Ignition |
| 5 | 63-8360 | 1 | Key-Ignition |
| 6 | 103-5221 | 1 | Switch-PTO |
| 7 | 110-6765 | 2 | Switch |
| 8 | 139-2381 | 1 | Strap-Rubber |
| 9 | 140-2713 | 1 | Cable-Battery, Pos |
| 10 | 139-2431 | 1 | Cable-Battery, Red (8 Gauge) |
| 11 | 110-6793 | 1 | Cable-Battery, Black |
| 13 | 3256-22 | 2 | Washer-Flat |
| 14 | 32144-4 | 2 | Screw-HWH |
| 15 | 321-3 | 1 | Screw-HH |
| 16 | 3234-14 | 1 | Screw-HHF |
| 17 | 3229-1 | 1 | Screw-CARR |
| 18 | 32128-33 | 1 | Nut-HF |
| 19 | 32103-22 | 1 | Nut-Wing |
| 20 | 3220-2 | 2 | Nut-Jam |
| 21 | 33003-00 | 1 | Nut-HF |
| 22 | 140-2080 | 1 | Cover-Solenoid |
| 23 | 140-2081 | 1 | Cap-Solenoid |
| 24 | 32180-418 | 1 | Clip-Harness |

# 50in Deck and Decal Assembly

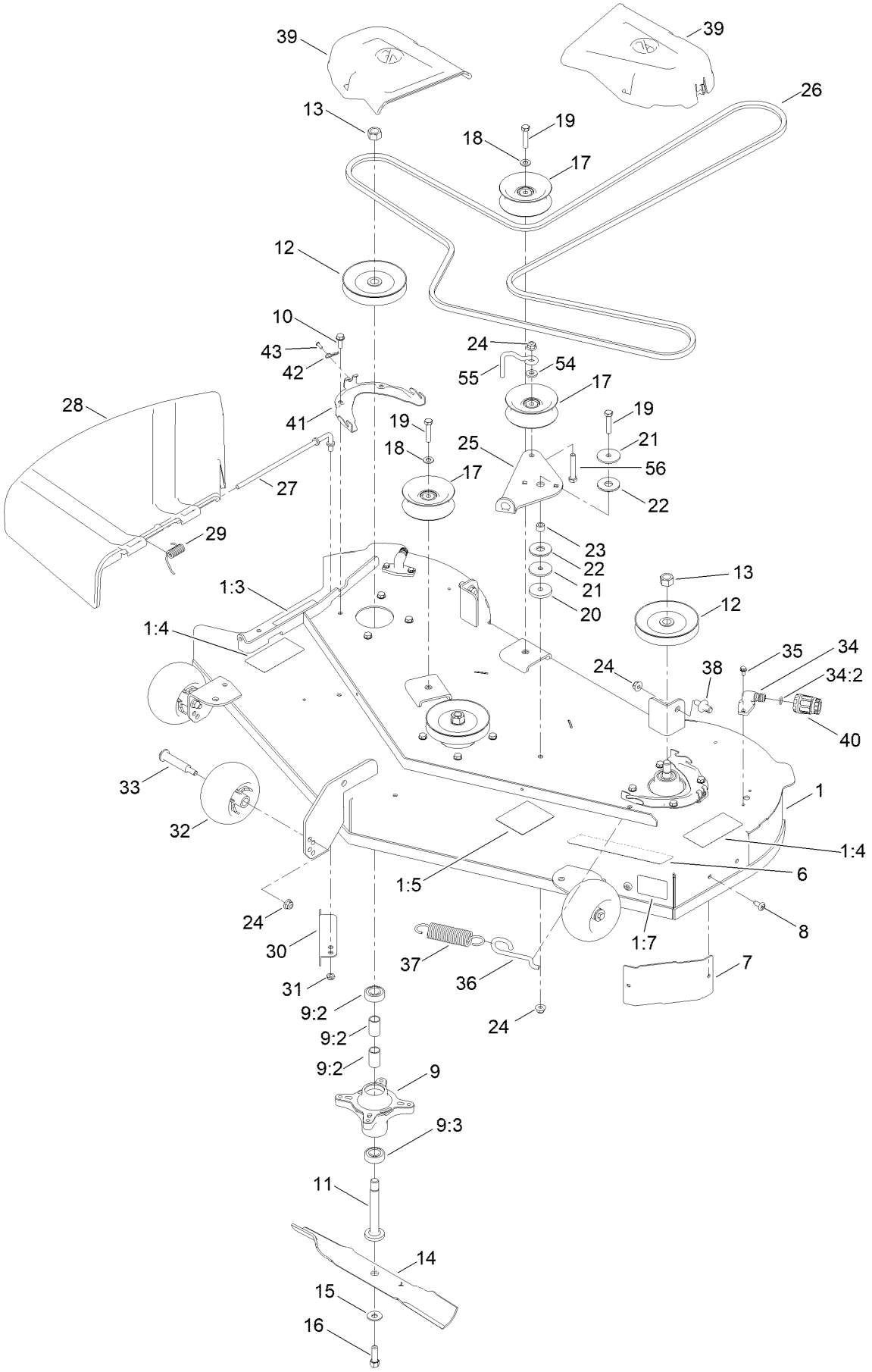

# 50in Deck and Decal Assembly (continued)

| Ref. | Part Number | Qty. | Description |
|---|---|---|---|
| 1 | 138-9764 | 1 | 50 Inch Deck And Decal ASM |
| 1:3 | 93-7009 | 1 | Decal-Danger |
| 1:4 | 132-0872 | 2 | Decal-Danger, Deck |
| 1:5 | 99-3943 | 1 | Decal-Routing, Belt |
| 1:7 | 112-9840 | 1 | Decal-Scalp, Anti |
| 6 | 139-3208 | 1 | Decal-Deck |
| 7 | 139-2448-03 | 1 | Baffle-Corner |
| 8 | 138-9753 | 2 | Screw |
| 9 | 139-3214 | 3 | Spindle ASM |
| 9:2 | 120-7935 | 2 | Spacer |
| 9:3 | 138-9770 | 2 | Bearing-Ball |
| 10 | 32144-41 | 12 | Screw-Taptite |
| 11 | 117-7268 | 3 | Shaft-Spindle |
| 12 | 139-7454 | 3 | Pulley |
| 13 | 3219-6 | 3 | Nut-Hex |
| 14 | 115-5059-03 | 3 | Blade-Hi Lift |
| 15 | 3290-465 | 3 | Washer-Belleville |
| 16 | 26-0671 | 3 | Screw-HH |
| 17 | 132-9420 | 3 | Pulley-Idler, Flat |
| 18 | 3256-24 | 2 | Washer-Flat |
| 19 | 323-9 | 3 | Screw-HH |
| 20 | 110-9981 | 1 | Washer-Plain |
| 21 | 63-7400 | 2 | Washer-Rebound |
| 22 | 114-0463 | 2 | Washer-Friction, Composite |
| 23 | 115-4986 | 1 | Spacer |
| 24 | 104-8301 | 7 | Nut-HF, NI |
| 25 | 138-7262 | 1 | Arm-Idler |
| 26 | 119-8820 | 1 | V-Belt |
| 27 | 137-2019 | 1 | Rod-Pivot |
| 28 | 138-7502 | 1 | Deflector-Discharge |
| 29 | 138-7268 | 1 | Spring-Torsion |
| 30 | 138-9800-03 | 1 | Baffle-Cutoff |
| 31 | 3296-59 | 1 | Nut-Lock, NI |
| 32 | 1-603299 | 3 | Roller-Scalp, Anti |
| 33 | 112-3977 | 3 | Bolt-Shoulder |
| 34 | 133-9289 | 2 | Fitting-Washout |
| 34:2 | 133-9290 | 1 | O-Ring |
| 35 | 32144-4 | 4 | Screw-HWH |
| 36 | 138-7266 | 1 | Spring-Return, Hook |
| 37 | 138-7264 | 1 | Spring-Extension |
| 38 | 139-5871 | 2 | Pin-Deck |
| 39 | 144-1906 | 2 | Cover-Belt |
| 40 | 95-3270 | 1 | Connector-Hose |
| 41 | 139-3272-03 | 2 | Bracket-Cover, Belt |
| 42 | 144-1944 | 2 | Pin-Hair |
| 43 | 94-6961 | 2 | Screw |
| 54 | 138-7207 | 1 | Spacer-Hub, Blower |
| 55 | 138-7270 | 1 | Guide-Belt, Idler |
| 56 | 323-11 | 1 | Screw-HH |

# Frame Decal Assembly

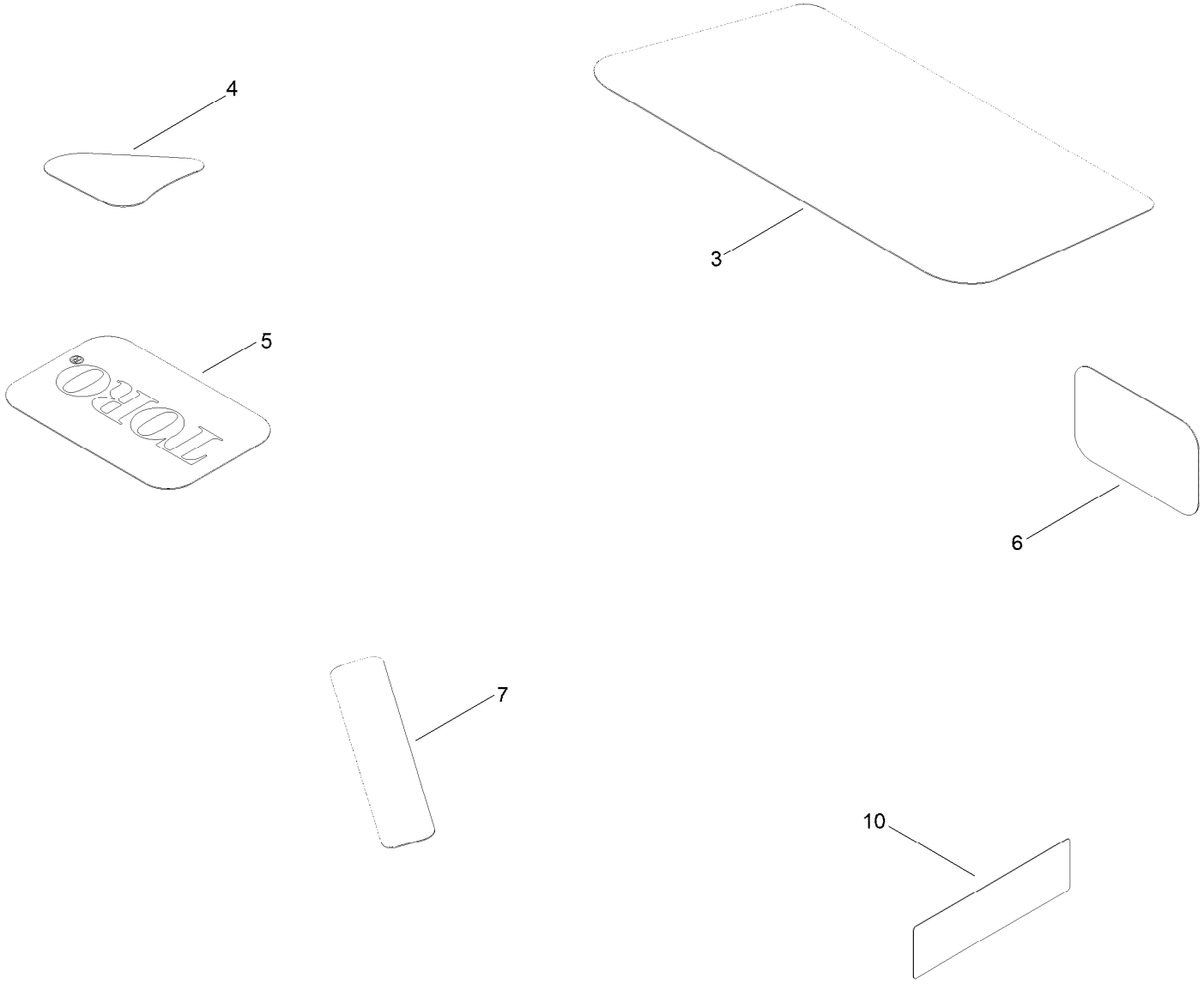

# Frame Decal Assembly (continued)

| Ref. | Part Number | Qty. | Description |
|---|---|---|---|
| 3 | 140-5132 | 1 | Decal-Engine |
| 4 | 131-1097 | 1 | Decal-Drain, Oil |
| 5 | 131-4157 | 1 | Decal |
| 6 | 127-9076 | 1 | Placard-Intake |
| 7 | 132-0904 | 1 | Decal-Shutdown |
| 10 | 140-2099 | 1 | Decal |

# Seat Pan Assembly

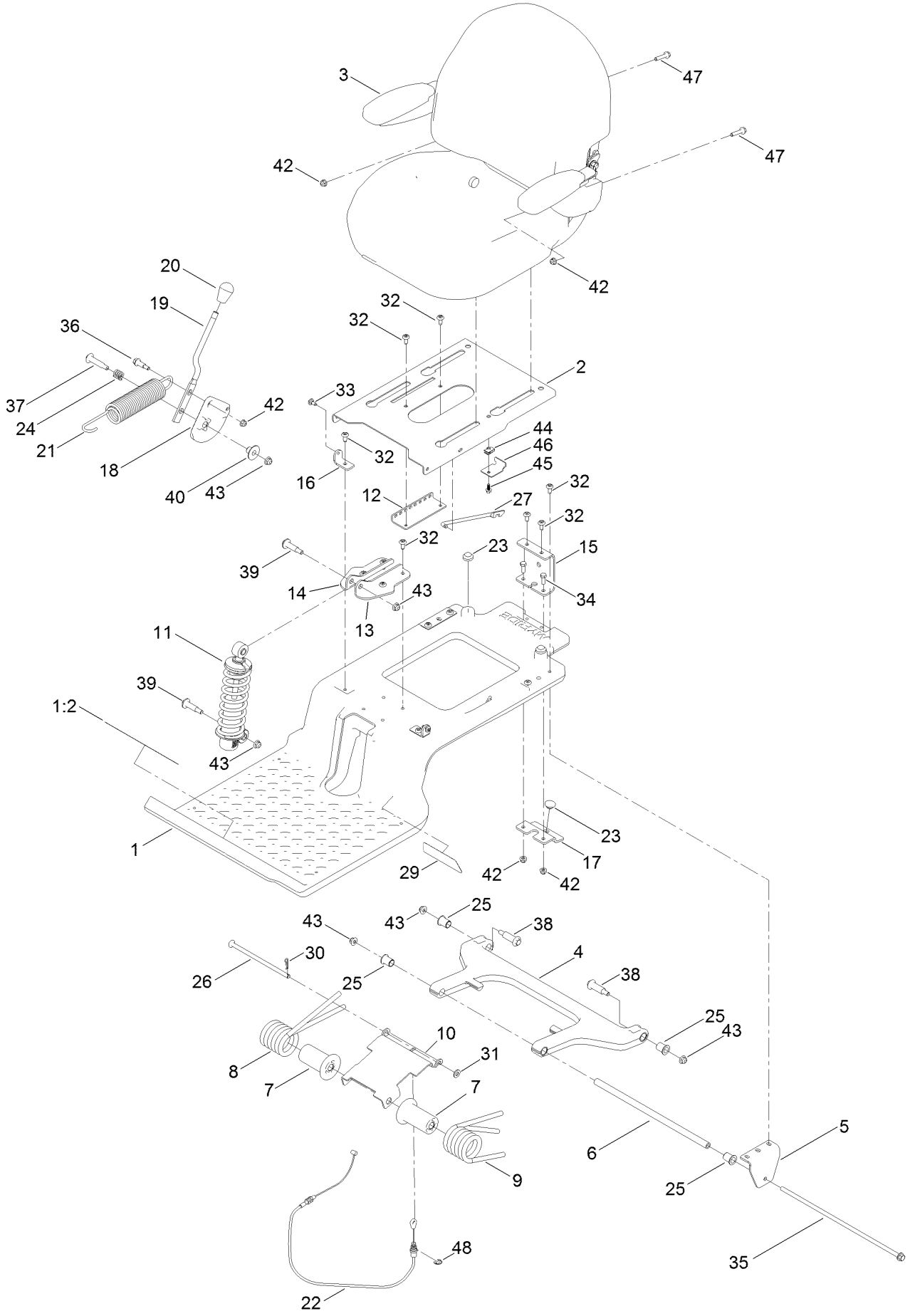

# Seat Pan Assembly (continued)

| Ref. | Part Number | Qty. | Description |
|---|---|---|---|
| 1 | 140-5046 | 1 | Subframe ASM |
| 1:2 | 132-0869 | 1 | Decal-Danger |
| 2 | 138-7540-03 | 1 | Pan-Seat |
| 3 | 140-8303 | 1 | Seat ASM |
| 4 | 138-2563 | 1 | Arm, Swing |
| 5 | 138-7517 | 2 | Bracket-Mount, Swing Arm |
| 6 | 138-7549 | 1 | Tube-Spacer |
| 7 | 138-9776 | 2 | Retainer-Spring |
| 8 | 137-7018 | 1 | Spring-Torsion, RH |
| 9 | 137-1983 | 1 | Spring-Torsion, LH |
| 10 | 138-7566-03 | 1 | Plate-Adjuster |
| 11 | 139-2427 | 1 | Shock/Spring ASM |
| 12 | 131-4008-03 | 1 | Bracket-Latch, Seat |
| 13 | 133-9318-03 | 1 | Bracket-Shock Mount, Upper (LH) |
| 14 | 133-9319-03 | 1 | Bracket-Shock Mount, Upper (RH) |
| 15 | 138-9788 | 1 | Bracket-Cable |
| 16 | 138-7522 | 2 | Bracket-Seat |
| 17 | 139-2361-03 | 1 | Bracket Lower |
| 18 | 138-9814 | 1 | Pulley - Cam |
| 19 | 138-9822 | 1 | Lever - Adjustment |
| 20 | 140-5176 | 1 | Knob-Mr |
| 21 | 138-9848 | 1 | Spring-Extension |
| 22 | 138-9812 | 1 | Cable-Adjustment, Myride |
| 23 | 135-0505 | 3 | Bumper-Seat |
| 24 | 139-5858 | 1 | Spring-Compression |
| 25 | 138-2573 | 4 | Bushing-Flange |
| 26 | 138-9813 | 1 | Rod-Adjustment |
| 27 | 138-2596 | 1 | Rod-Prop, Seat |
| 29 | 140-0357 | 1 | Decal-Myride |
| 30 | 1-806003 | 1 | Pin-Cotter |
| 31 | 3256-24 | 1 | Washer-Flat |
| 32 | 138-9753 | 14 | Screw |
| 33 | 120-7950 | 2 | Screw-Torx |
| 34 | 322-4 | 2 | Screw-HH |
| 35 | 138-7548 | 1 | Screw-HHF |
| 36 | 130-2344 | 1 | Bolt-Shoulder |
| 37 | 92-1057 | 1 | Bolt-Shoulder |
| 38 | 138-2547 | 2 | Bolt-Shoulder |
| 39 | 136-7198 | 2 | Bolt-Shoulder |
| 40 | 139-5800 | 1 | Bushing - Flange |
| 42 | 104-8300 | 5 | Nut-HF, NI |
| 43 | 119-4042 | 6 | Nut-HF, NI |
| 44 | 107069 | 1 | Clip |
| 45 | 99-6810 | 1 | Screw-HHF |
| 46 | 138-7214 | 1 | Bracket-Stop, Seat |
| 47 | 140-5024 | 2 | Screw-HHF |
| 48 | 32120-47 | 1 | Ring-Retaining, External |

# Seat Assembly No. 140-8303

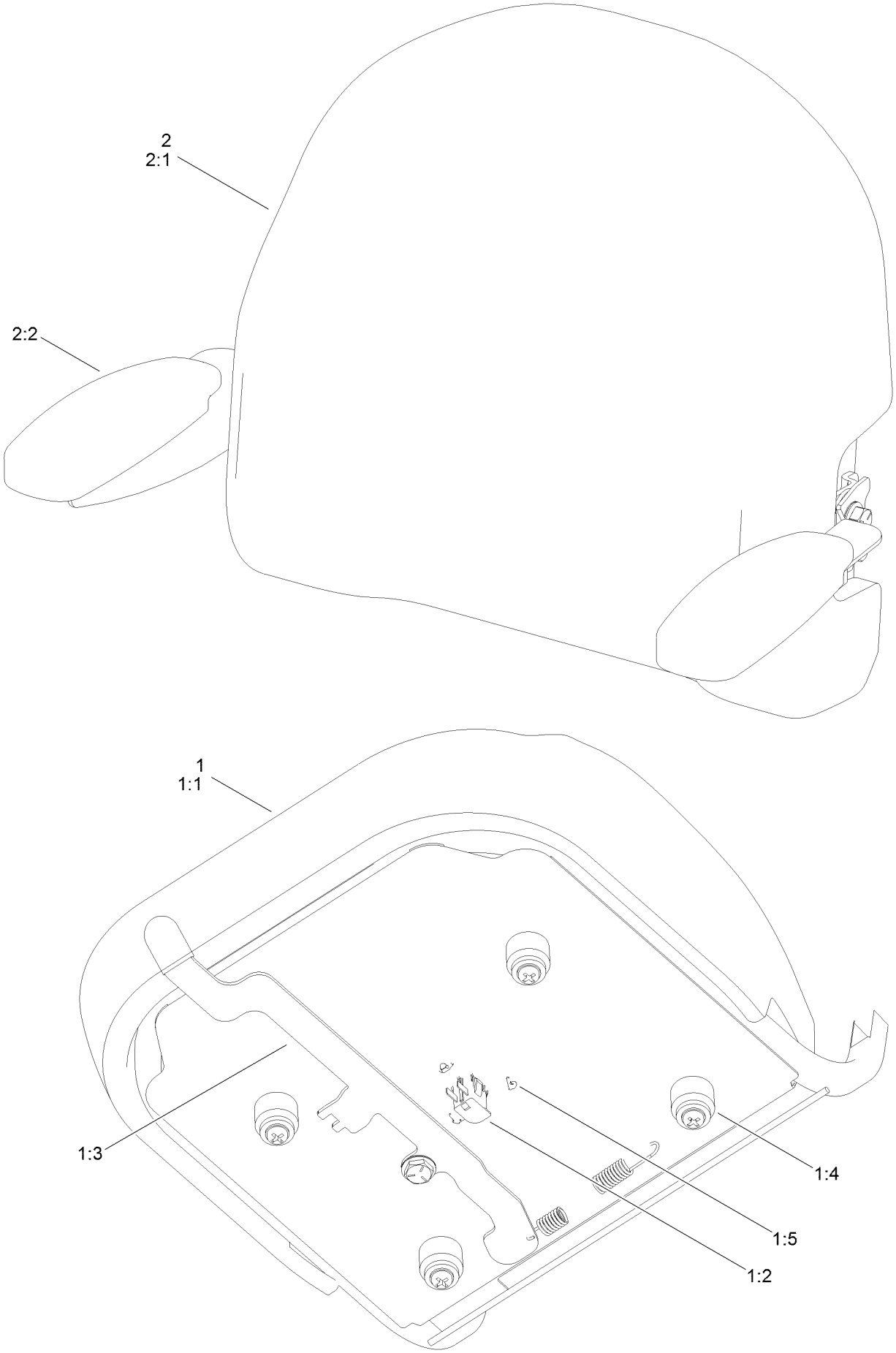

# Seat Assembly No. 140-8303 (continued)

| Ref. | Part Number | Qty. | Description |
|---|---|---|---|
| 1 | 140-8323 | 1 | Seat ASM - Bottom |
| 1:1 | 140-5042 | 1 | Cover-Seat Base |
| 1:2 | 82-2190 | 1 | Switch-Bail |
| 1:3 | 131-4153 | 1 | Track ASM |
| 1:4 | 131-4154 | 1 | Bushing ASM |
| 1:5 | 140-3468 | 1 | Cap-Switch, Actuator |
| 2 | 140-8324 | 1 | Seat ASM -Back |
| 2:1 | 140-5041 | 1 | Cover-Seat Back |
| 2:2 | 139-5823 | 1 | Arm Rest Kit |

# Clutch Assembly

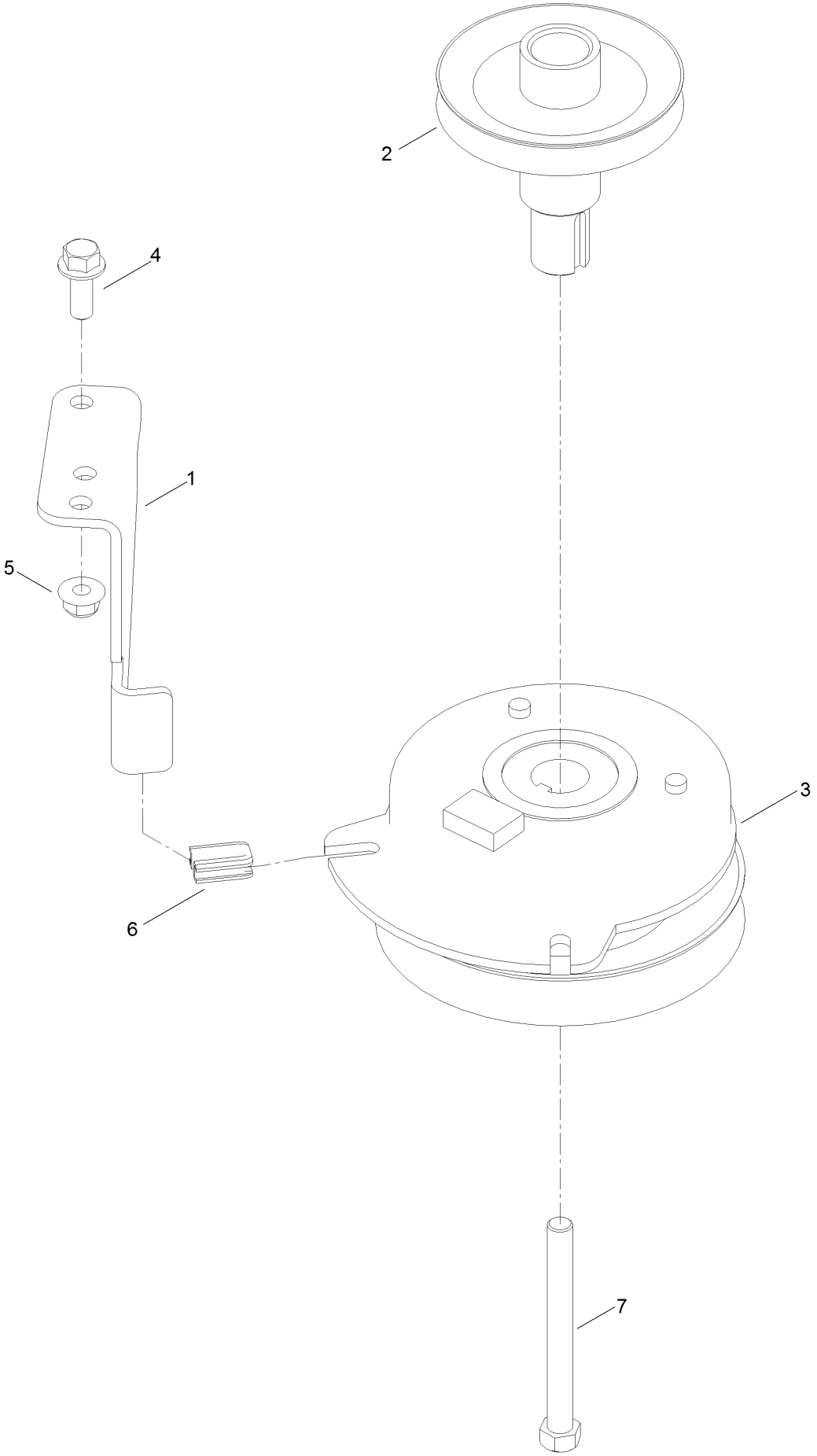

# Clutch Assembly (continued)

| Ref. | Part Number | Qty. | Description |
|---|---|---|---|
| 1 | 137-7000 | 1 | Stop-Clutch (Wide) |
| 2 | 138-9792 | 1 | Pulley-Engine |
| 3 | 127-3408 | 1 | Clutch-PTO |
| 4 | 3234-42 | 1 | Screw-HHF |
| 5 | 104-8301 | 1 | Nut-HF, NI |
| 6 | 120-2217 | 1 | Isolator-Clutch |
| 7 | 3212-17 | 1 | Screw-HH |

# Attachments and Accessories

## For 75755 TimeCutter MX 5075 Riding Mower

| Product Name | Model/Part |
|---|---|
| Hourmeter Kit | 116-5461 |
| Seat Cover w/Arm Rest | 117-0097 |
| Jack Kit | 127-6666 |
| Fuel Stabilizer .05 oz | 130-2393 |
| 4-Cycle Fuel, Snow And Lawn 32oz Can | 131-3823 |
| Toro Premium Fuel Treatment 12 Oz Bottle | 131-6572 |
| Heavy Duty Air Cleaner Kit | 135-6195 |
| Maintenance Kit Toro V-twin Engine | 139-0646 |
| Maintenance Kit Toro | 139-0649 |
| 50 Inch Recycler Kit | 139-3240 |
| 50 Inch Bagging Enhancement Kit | 139-7459 |
| Front Weight Kit | 140-2050 |
| Heavy Duty Spring Kit | 140-2051 |
| Assist Bar Kit | 140-2052 |
| Sunshade Kit | 140-2054 |
| LED Light Kit | 140-2056 |
| Floormat Kit | 140-2061 |
| Jack Mount Kit | 140-2711 |
| 50 Inch Striping Kit | 140-5160 |
| 10w30 4-Cycle Engine Oil (32oz Bottle) | 38280 |
| Toro 4-Cycle SAE 30 Oil (32oz Bottle) | 38903 |
| Storage Cover | 490-7516 |
| Mower Deck Drive Belt, TimeCutter SS Riding Mower with 50-inch Mowing Deck | 79005 |
| Blade Kit | 79016P |
| Twin Bagger, Timecutter 50/54 Inch Fab. | 79412 |
| ROPS Kit | 79485 |
| Slope Sensor Kit | 79486 |

**Notes:**

**Notes:**

**Notes:**

TORO®

Count on it.