Form No. 3452-562 Rev A

TORO®

Count on it.

Parts Catalog

22in Recycler®

Lawn Mower with SmartStow®

Model No. 21445—Serial No. 411871745 and Up

Register at www.Toro.com.
Original Instructions (EN)

3452-562 A

Ordering Replacement Parts

To order replacement parts, please supply the part number, the quantity, and the description of each part desired.

Understanding Reference Numbers

Each identified part in an illustration has a reference number. The reference number for a part also appears in the parts list, along with other information about the part.

This catalog uses two special reference number formats, one to indicate parts in a service assembly and another to indicate the quantity of a given part in an illustration.

Service Assembly Reference Numbers

Parts in service assemblies have reference numbers in the form a:b. The a represents the reference number of the entire service assembly and the b represents a sequential number unique to each part within the service assembly.

For example, a wheel assembly might be identified by reference number 6, the tire by 6:1, the valve by 6:2, and the wheel by 6:3. When you order the assembly identified by reference number 6, you receive all parts identified by reference numbers 6:1,6:2, and 6:3. However, you may also order any part individually. Reference numbers of this type appear in illustration and in parts lists.

Reference Numbers Indicating Quantity

In an illustration, if a reference number indicates more than one part, the reference number has the form nX y. The n represents the quantity of the part, the X is the multiplication symbol, and the y represents the reference number.

For example, in an illustration, the reference number 2X 37 means that two of the parts identified by reference number 37 are indicated.

Contents

Housing Assembly 4
Rear Bag Assembly 6
Decal Assembly 8
Engine and Blade Assembly 10
Front Wheel and Height-of-Cut Assembly 12
Rear Wheel and Height-of-Cut Assembly 14
Handle Assembly 16
Attachments and Accessories 18

© 2022—The Toro® Company
8111 Lyndale Avenue South
Bloomington, MN 55420

Contact us at www.Toro.com.
Printed in the USA.
All Rights Reserved

Housing Assembly

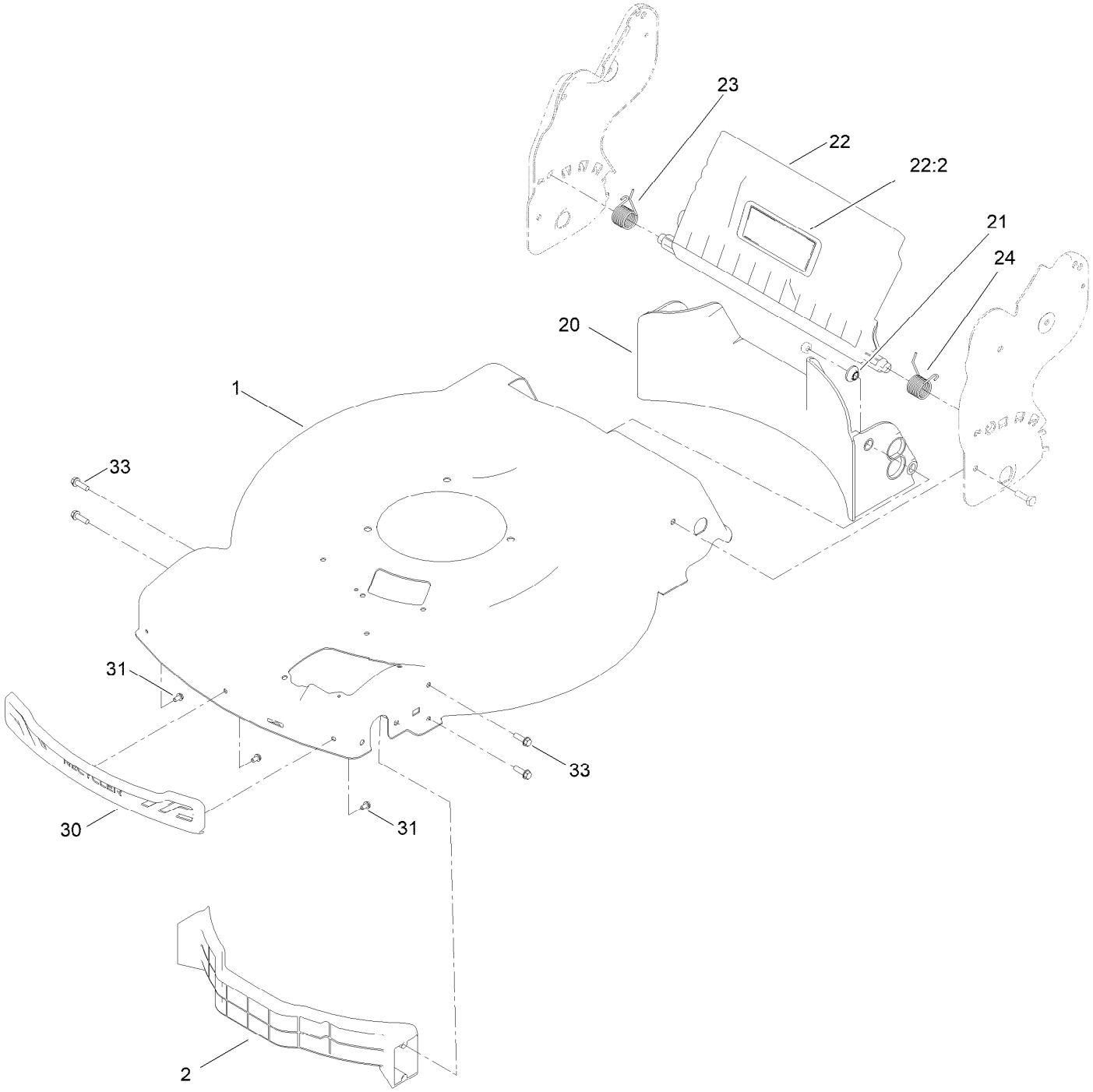

Housing Assembly (continued)

Ref.	Part Number	Qty.	Description
1	144-3191	1	Housing ASM
2	144-6427	1	Baffle-Front, Domestic
20	140-3906	1	Baffle-Rear, Fwd
21	117-5991	2	Washer-Stepped, Baffle
22	136-7003	1	Rear Deflector ASM
22:2	131-4514	1	Decal-Warning

Ref.	Part Number	Qty.	Description
23	140-4197	1	Spring-Torsion
24	140-4198	1	Spring-Torsion
30	139-5457	1	Bumper-Front
31	139-5467	3	Screw-Plastic, HWH
32	117-5924	1	Foam-Seal ●
33	46-8091	4	Screw-HWH

● Not illustrated

Rear Bag Assembly

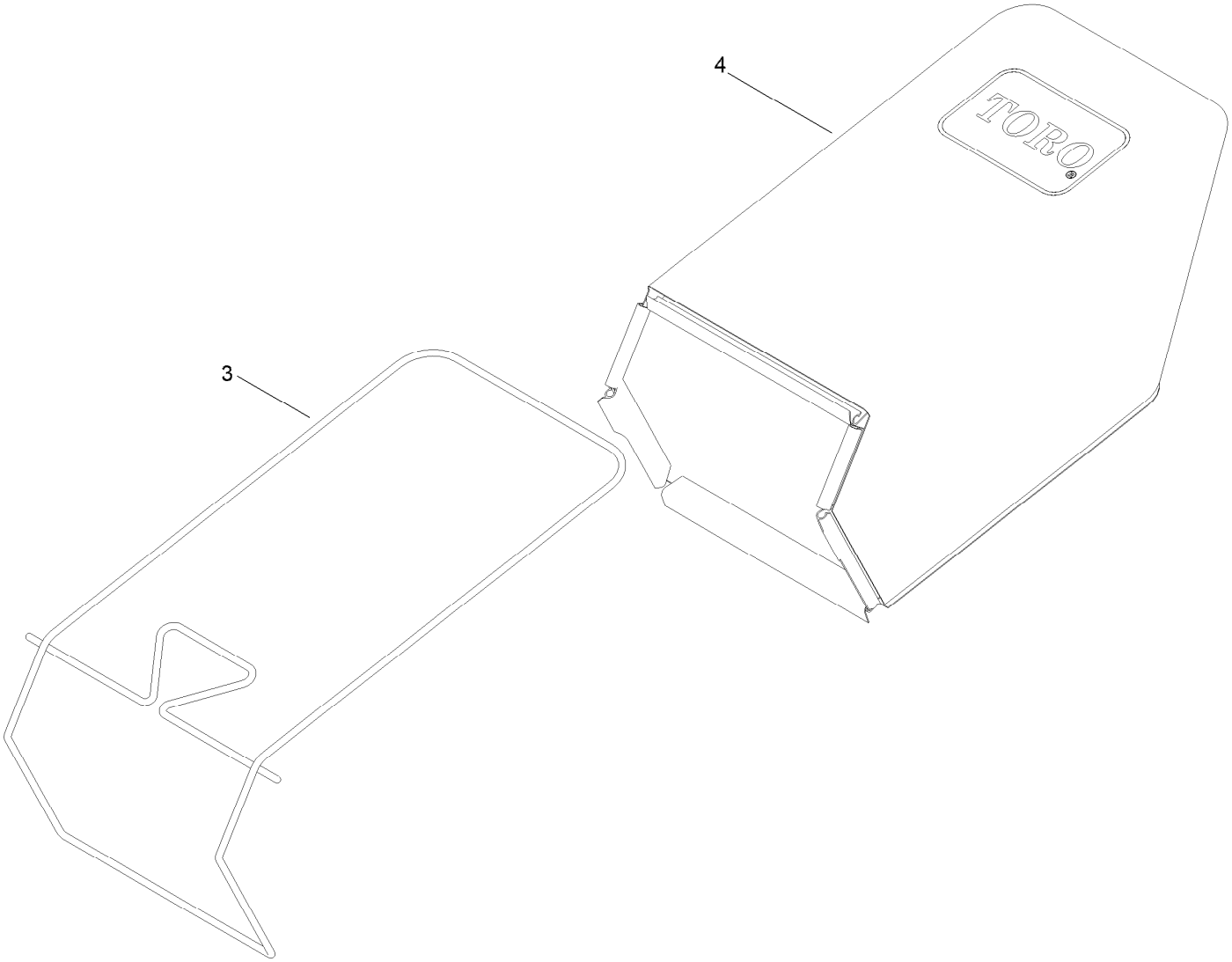

Rear Bag Assembly (continued)

Ref.	*Part Number*	*Qty.*	*Description*
3	140-3931-03	1	Bag Frame ASM (Welded)
4	140-3933	1	Grass Bag ASM

Decal Assembly

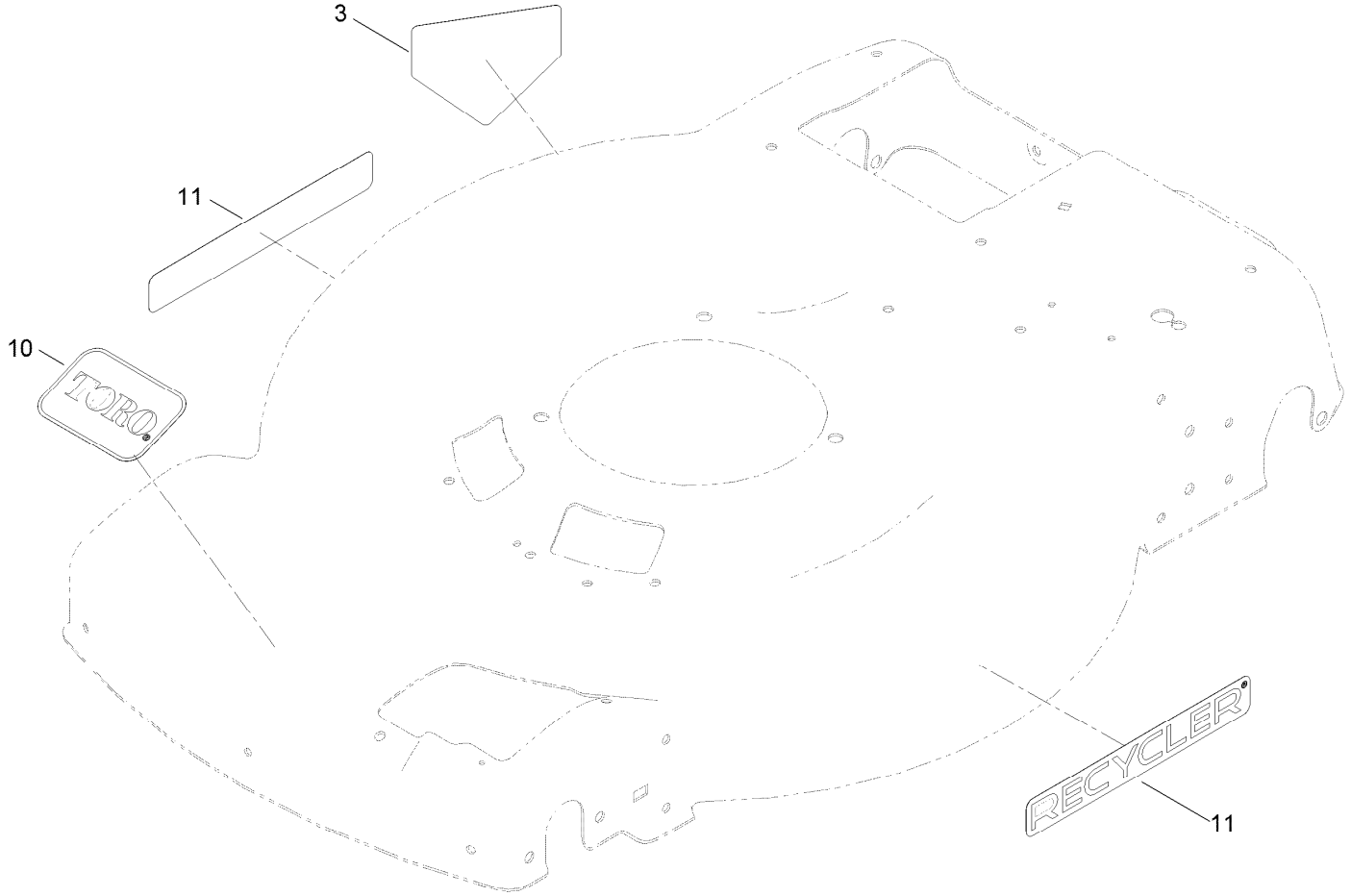

Decal Assembly (continued)

Ref.	Part Number	Qty.	Description
3	94-8072	1	Decal-Danger
10	140-4183	1	Decal
11	140-4184	2	Decal

Engine and Blade Assembly

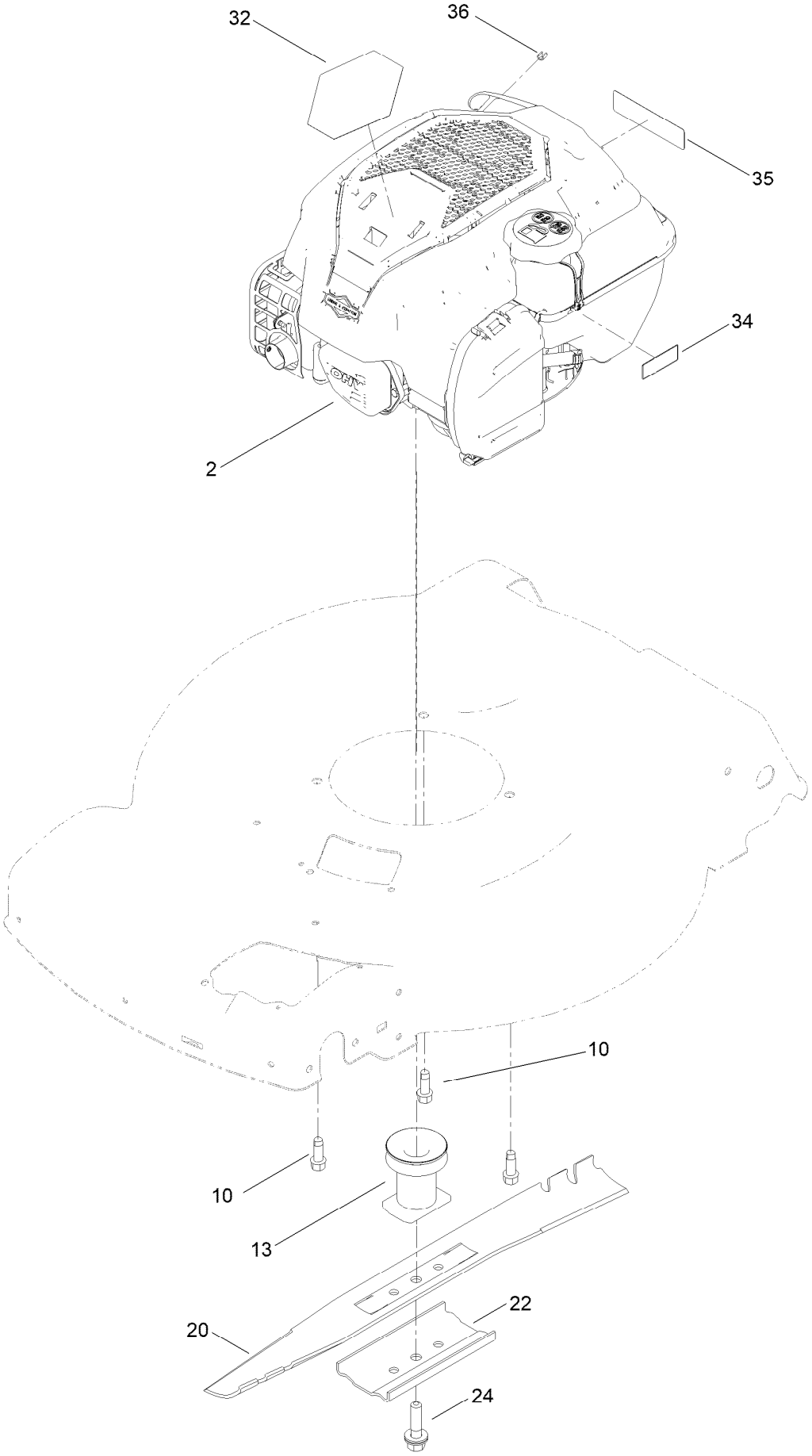

Engine and Blade Assembly (continued)

Ref.	Part Number	Qty.	Description
2		1	Engine-Briggs, 625 Exi Zs SS ●■
10	95-1726	3	Screw-Taptite
13	140-3975	1	Driver-Blade
20	131-4547-03	1	Blade-22 Inch
22	108-3766-03	1	Support-Blade
24	125-2466	1	Bolt-Blade
32	140-4247	1	Decal-Briggs 625 Exi SS
34	133-8198	1	Decal-Level, Fuel
35	133-8062	1	Decal-Arrestor, Spark
36	2210-316	1	Stop-Rope

● Not serviced separately

■ Obtain parts from www.briggsandstratton.com

Front Wheel and Height-of-Cut Assembly

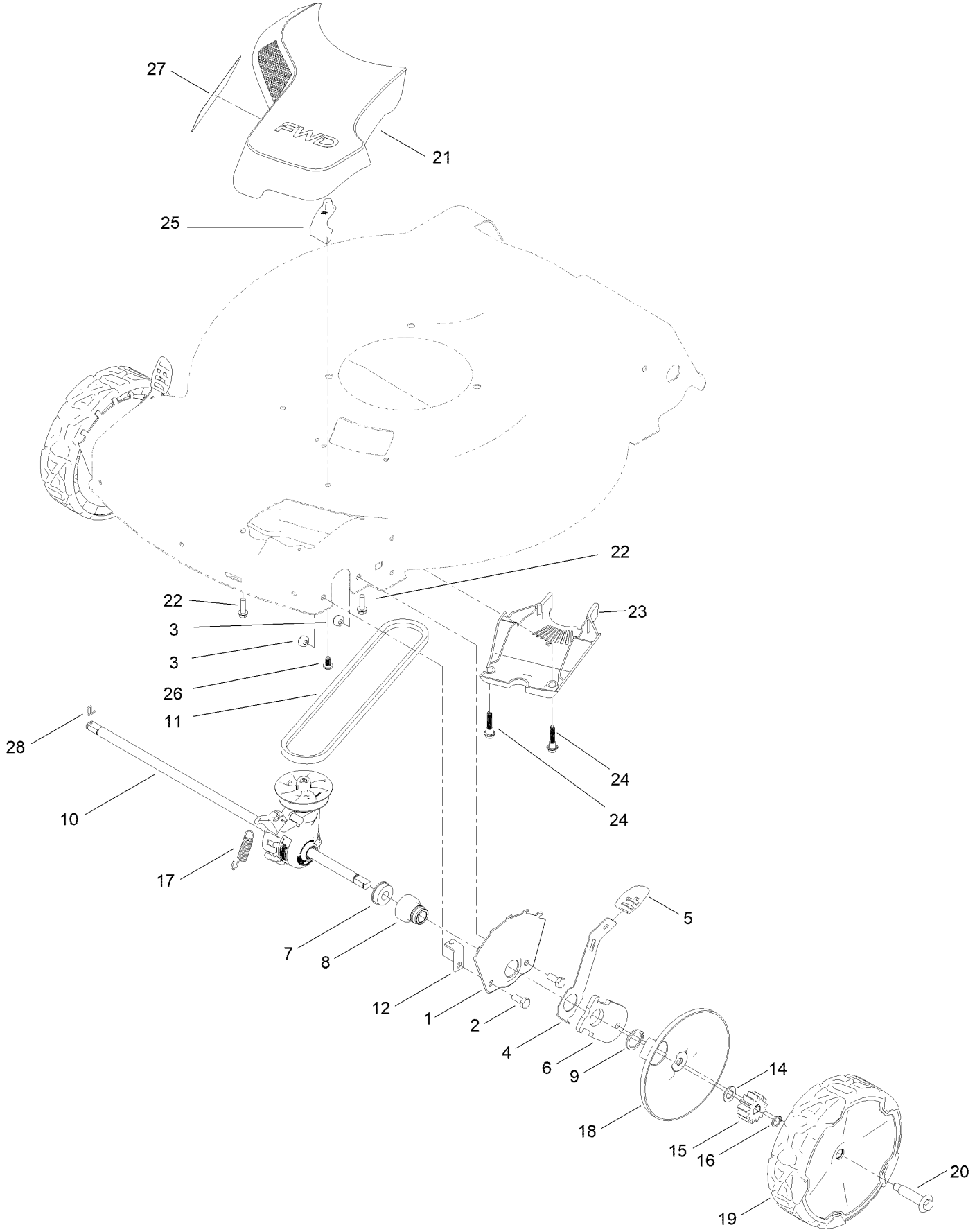

Front Wheel and Height-of-Cut Assembly (continued)

Ref.	Part Number	Qty.	Description
1	115-1956-05	2	Plate-HOC,Front Fsvq
2	322-3	4	Screw-HH
3	3296-29	4	Nut-Lock, NI
4	105-1809	2	Arm-Spring
5	105-3042	2	Knob-Lever, HOC
6	137-9128	2	Arm-Pivot, Front
7	104-8699	2	Bearing-Ball
8	131-0836	2	Retainer-Bearing, HOC
9	32151-36	2	Ring-Retaining
10	139-6562	1	Transmission-Fwd
11	117-1018	1	V-Belt
12	144-6392	1	Tab-Mount, Cable
14	110-7191	2	Washer-Thrust
15	131-0896	2	Gear-Pinion, 13T
16	32151-61	1	Ring-Retaining
17	145-3863	1	Spring-Extension
18	140-2364	2	ASM-Cover, Wheel (Dk Gray)
19	140-2358	2	ASM-8" Wheel, Fwd (Bushings)
20	139-1789	2	Wheel Bolt
21	144-0215	1	ASM-Intake, Fwd
22	46-8091	3	Screw-HWH
23	140-2389	1	Cover-Belt, Lower (Awd)
24	131-0837	2	Screw-Shoulder, HHF
25	144-6371	1	Pad-Stop
26	139-1679	1	Screw-Plastic,PH
27	140-4186	1	Decal
28	130-2369	1	Pin-Snap

Rear Wheel and Height-of-Cut Assembly

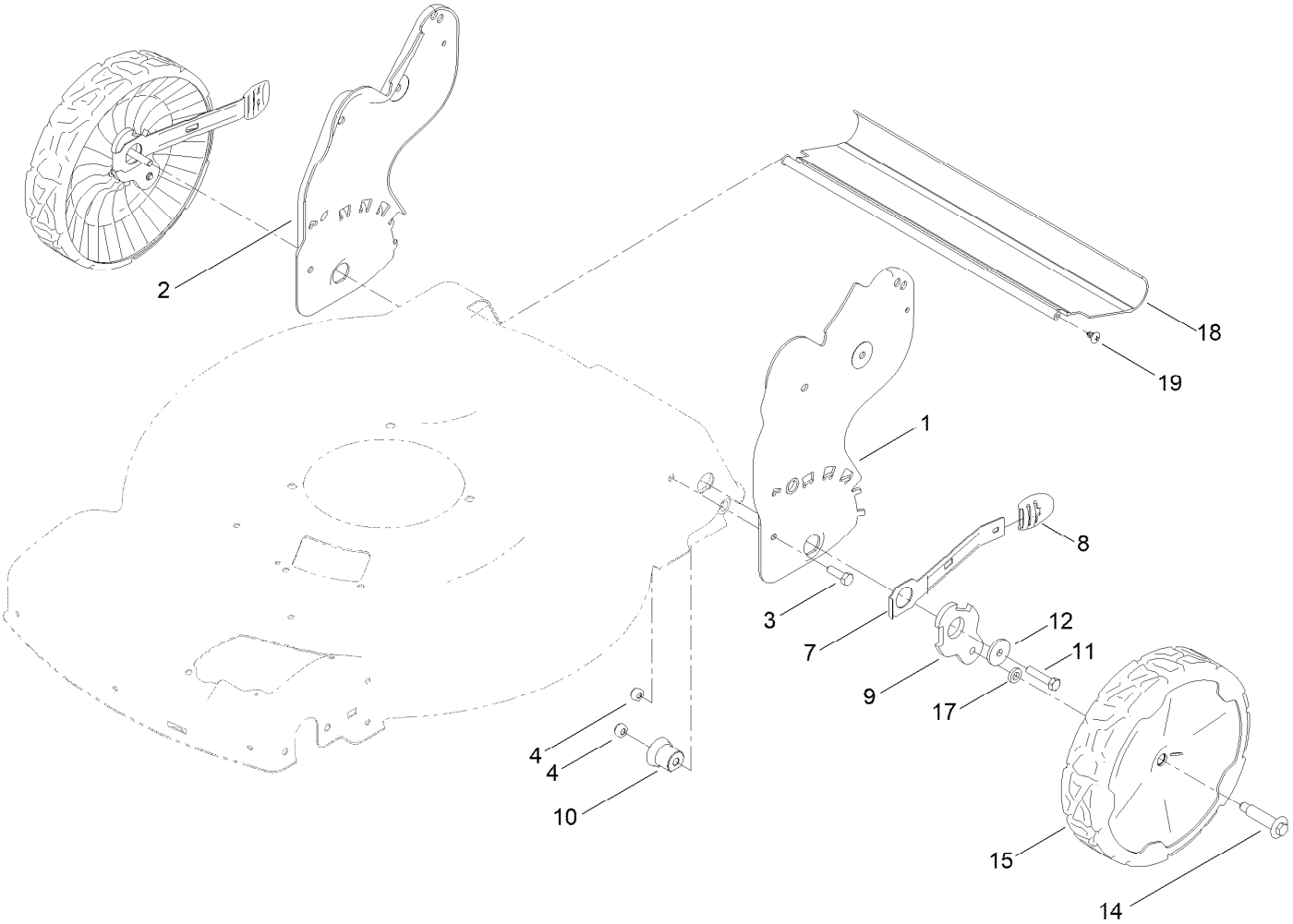

Rear Wheel and Height-of-Cut Assembly (continued)

Ref.	Part Number	Qty.	Description
1	140-3910-05	1	Plate-HOC, Fwd LH [blk-Txt]
2	140-3911-05	1	Plate-HOC, Fwd RH [blk-Txt]
3	322-5	2	Screw-HH
4	3296-29	4	Nut-Lock, NI
7	115-2899	2	Arm-Spring, Rear
8	105-3042	2	Knob-Lever, HOC
9	140-3878	2	Arm-Pivot, Rear
10	131-0895	2	Bushing-Mount, HOC
11	322-7	2	Screw-HH
12	105-3048	2	Washer-Flat
14	139-1789	2	Wheel Bolt
15	140-2351	2	ASM-9.65" Wheel, Bushings
17	139-5449	2	Washer-Wheel Bolt
18	144-6431	1	Shield-Trailing
19	117-1092	2	Screw-PTH

Handle Assembly

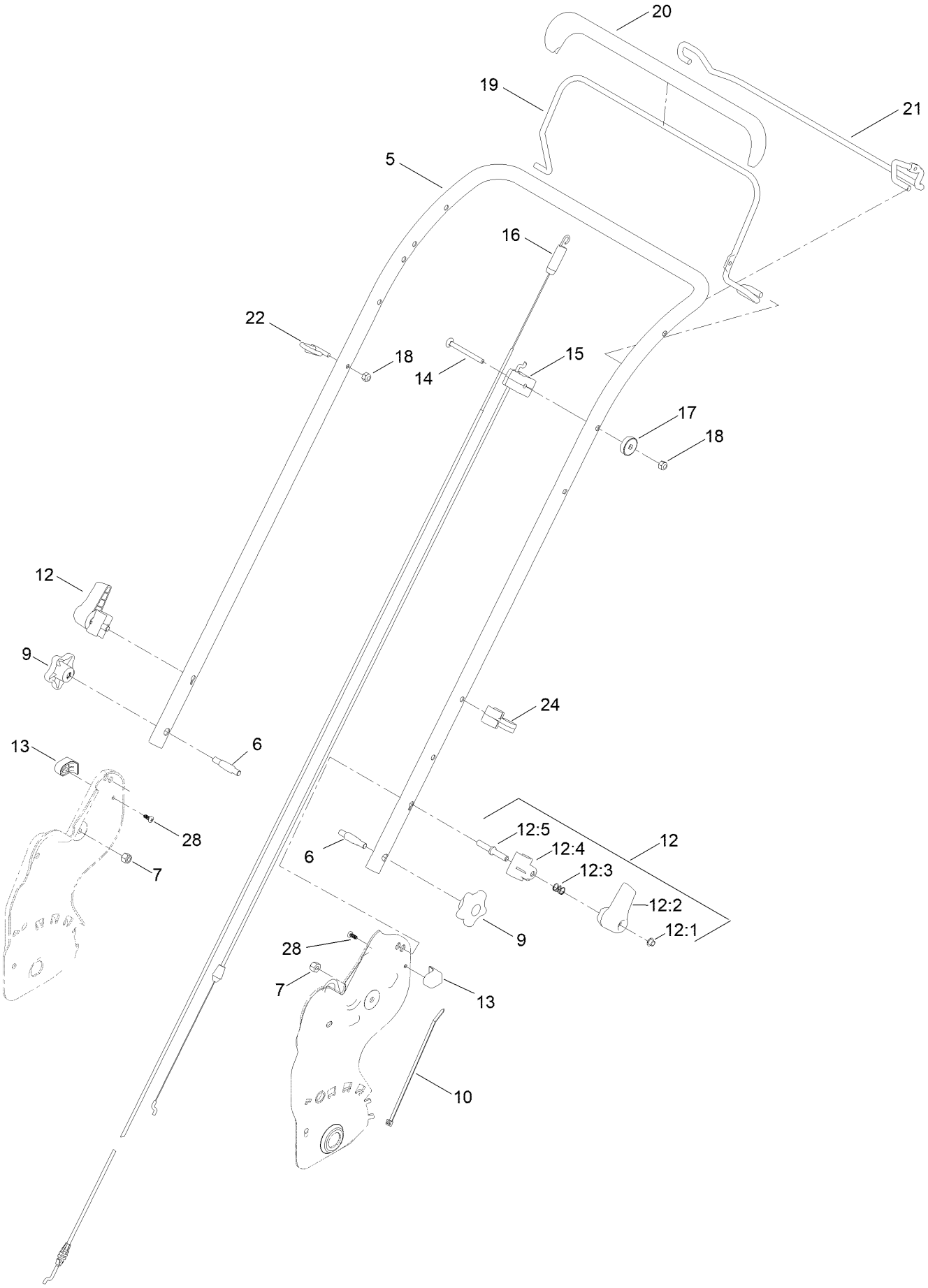

Handle Assembly (continued)

Ref.	Part Number	Qty.	Description
5	139-5458-05	1	Handle-Curved
6	139-6588	2	Bolt-Shoulder, Handle
7	3296-29	2	Nut-Lock, NI
9	117-5976	2	Knob-Handle
10	614249	1	Tie-Cable
12	138-3249	2	Quick Release ASM
12:1	140-4157	1	Nut-Push
12:2	138-3248	1	Lever-Release
12:3	138-3253	1	Anchor-Spring
12:4	115-2858	1	Spring-Compression
12:5	140-4158	1	Rod-Release
13	140-2369	2	Pad-Smart Stow

Ref.	Part Number	Qty.	Description
14	144-0221	1	Screw-CARR
15	140-3948	1	Cable-Brake, Fwd
16	140-3947	1	Cable-Traction, Fwd
17	136-9075	1	Washer-Curved
18	3296-73	2	Nut-Lock, NI
19	140-3918-03	1	Bail-Brake
20	140-3879	1	Cover-Bail
21	140-4024-03	1	Bail-Traction
22	86-9671	1	Guide-Rope
24	114-7988	1	Guide-Cable
28	107-7461	2	Screw-Plastite

Attachments and Accessories

For 21445 22in Recycler Lawn Mower with SmartStow

Product Name	Model/Part
SD Chute ASM	145-1538
22 Inch Atomic Blade	59534P
Briggs Maint Kit	130-8148
Smart Stow Walk Power Mower Cover	490-2012
Lawn Striping Kit with 22in Roller	20601
Bag-Walk Behind (Toro)	490-7318
Oil-30/10W-30 Synthetic (Quart)	138-6053
Summer Oil-Case of 24 (20oz Bottles)	38916
4-Cycle Fuel, Snow And Lawn 32oz Can	131-3823
Fuel Stabilizer .05 oz	130-2393
Toro Premium Fuel Treatment 12 Oz Bottle	131-6572
Toro 4-Cycle SAE 30 Oil (32oz Bottle)	38903

Notes:

TORO®

Count on it.