FORM NO. 3311-274

TORO

MODEL NO. 38100 — 9000001 & UP

PARTS CATALOG

TORO S-140

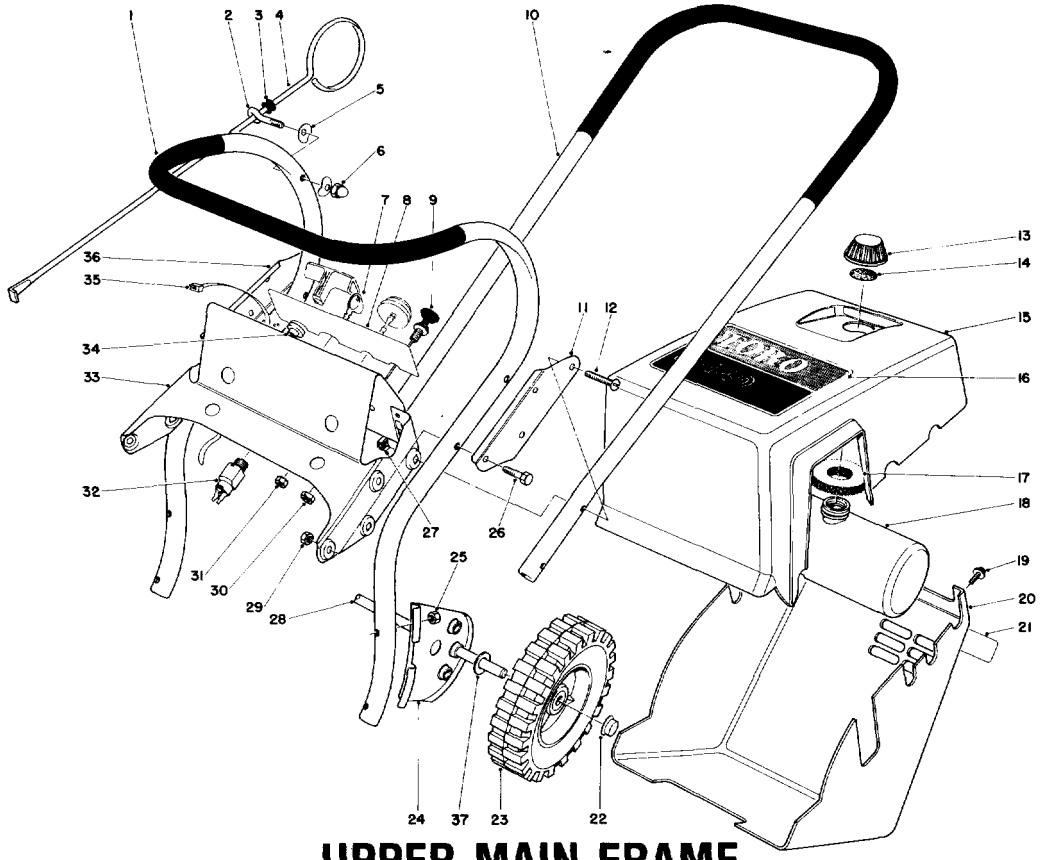

UPPER MAIN FRAME

Ref. No.	Part No.	Description	No. Used
1	33-4480	Lower Handle	1
2	3-9278	Eye Bolt	1
3	237-73	Grommet	1
4	5-3371	Vane Adjustment Rod	1
5	3-7501	Washer	2
6	32111-7	Capnut	1
7	33-2010	Key	2
8	29-5840	Decal Control Panel	1
9	29-5790	Choke Control	1
10	33-4520	Upper Handle	1
11	3-7503	Plate Splice	1
12	32140-100	Round Head Machine Screw	4
13	38-3000	Gas Cap Assy. (Incl. Ref. #14)	1
14	20-4620	Gasket - Gas Cap	1
15	8-2819	Shroud (Incl. Ref. #16)	1
16	37-1270	Decal - Toro	1
17	25-1610	Foam Pad	1
18	8-2829	Gas Tank Assembly (Incl. Ref. #13 & 14)	1

Ref. No.	Part No.	Description	No. Used
19	12-5450	Screw Special	4
20	6-9849	Lower Shroud (Incl. Ref. #21)	1
21	29-5830	Decal - Instruction	1
22	3290-320	Retainer - Push On	2
23	23-3250	Wheel	2
24	37-0360	Wheel Bracket	2
25	3217-5	Nut	4
26	321-8	Capscrew	4
27	3290-303	Nut Retainer	4
28	29-7560	Axle	1
29	32152-4	Locknut	4
30	3290-385	PAL Nut	1
31	32149-2	Locknut w/Shakeproof Washer	1
32	29-5560	On-Off Switch	1
33	6-9839	Tank Support & Control Panel (Incl. Ref. #8)	1
34	23-7470	Guide — Starter Rope	1
35	3290-336	Gas Tank Strap	2
36	3-7504	Splice Plate	1
37	3256-24	Washer	2

COPYRIGHT © ALL RIGHTS RESERVED
The Toro Company — 1978
MINNEAPOLIS, MN 55420 – U.S.A.

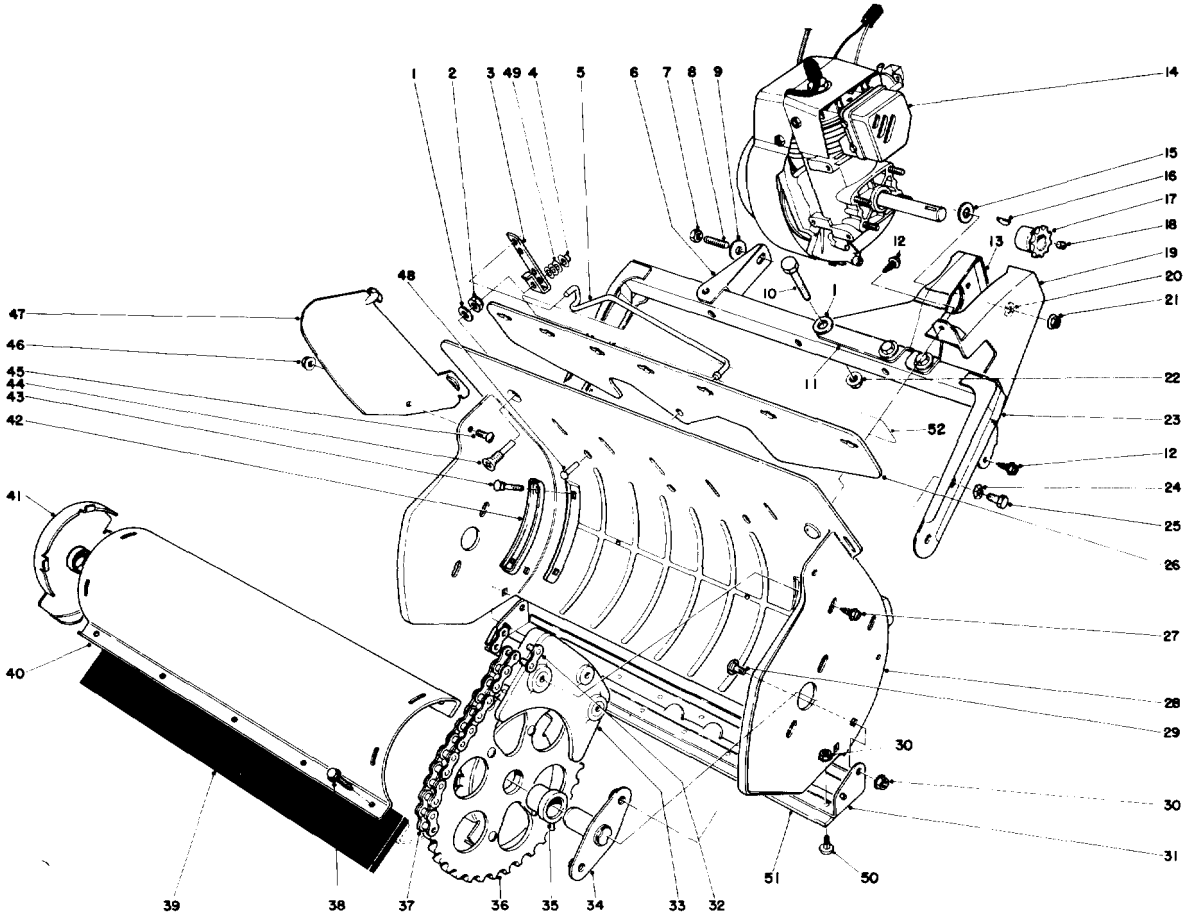

LOWER MAIN FRAME

Ref. No.	Part No.	Description	No. Used
1	3256-2	Washer	5
2	3296-47	Locknut	1
3	28-7870	Bracket Vane Adjustment	1
4	3290-337	Retainer Push-On	1
5	11-5410	Linkage Vane Adjustment	1
6	29-5730	Frame Bracket	1
7	32152-4	Locknut	1
8	29-5700	Stud	1
9	3-5792	Washer	1
10	321-10	Capscrew	4
11	29-5710	Engine Bracket Internal	1
12	32104-76	Self Tapping Screw	2
13	29-5720	Engine Bracket External	1
14	221-561	Engine	1
15	3256-23	Washer	4
16	3257-3	Woodruff Key	1
17	3-9464	Sprocket	1
18	3245-32	Set Screw	2
19	29-5780	Chain Guard	1
20	3255-18	Lockwasher	4
21	32128-13	Flanged Locknut	4
22	32128-10	Flanged Nut	4
23	29-5850	Frame	1
24	3290-257	Pyramidal Washer	4
25	321-29	Capscrew	4
26	17-5060	Vane Mount	1
27	32144-34	Self Tapping Screw	2

Ref. No.	Part No.	Description	No. Used
28	29-7740	Housing	1
29	3229-10	Carriage Bolt	4
30	32149-2	Locknut	7
31	37-1210	Scraper Support	1
32	2710-31	Connecting Link	1
33	5-0997	Stripper Assembly	1
34	27-9710	Rotor Shaft	2
35	11-6160	Rotor - Bushing	2
36	11-6080	End Cap Assembly L.H. (Incl. Ref. #35)	1
37	29-5740	Chain	1
38	37-0370	Screw	10
39	11-6130	Blade - Rotor	2
40	11-6110	Shell Rotor	2
41	11-6090	End Cap Assembly R.H. (Incl. Ref. #35)	1
42	3-7498	Handle Plate	2
43	3229-4	Carriage Bolt	4
44	3-7511	Screw Vane Adjustment	1
45	32122-30	Truss Head Screw	2
46	32128-17	Locknut	2
47	23-3670	Vane	7
48	3290-325	Dome Head Rivet	3
49	3256-22	Washer	3
50	3229-11	Carriage Bolt	3
51	37-0340	Scraper	1
52	38-1220	Decal - Warning	1
*	8-2109	Loose Parts	1
*	25-9150	Replacement Serial Plate	1

*Not illustrated

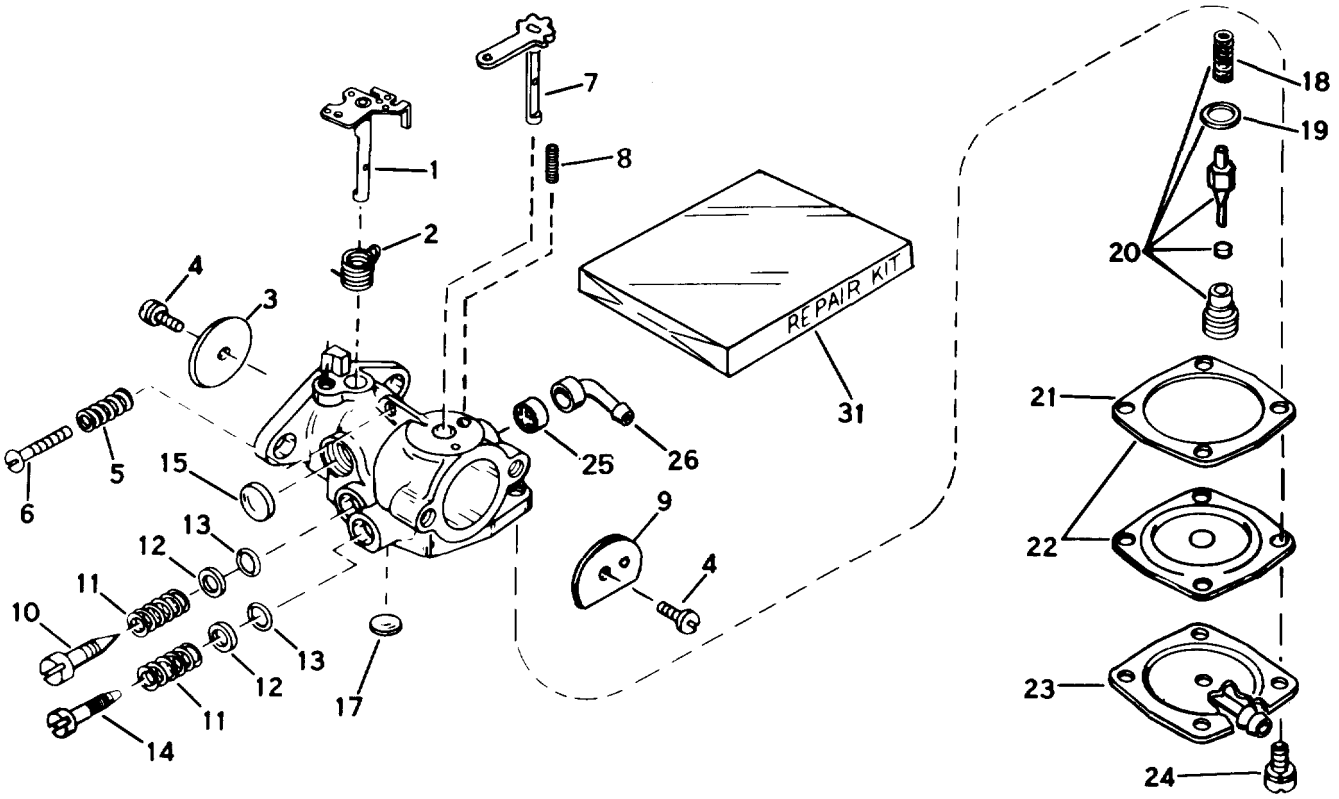

CARBURETOR NO. 632035

Ref. No.	Part No.	Description	No. Used
1	631868	Shaft & Lever Assy., Throttle	1
2	631066	Spring, Return	1
3	631036	Shutter, Throttle	1
4	650506	Screw, Throttle & Choke Shutter	2
5	630766	Spring, Idle Speed	1
6	650417	Screw, Idle Regulating	1
7	632036	Shaft & Lever Assy., Choke	1
8	630735	Spring, Choke Positioning	1
9	31837	Shutter, Choke	1
10	631562	Screw, Idle Adjustment	1
11	630738	Spring, Adjustment Screw	2
12	630739	Washer, Adjustment Screw	2
13	*630740	"O" Ring, Adjustment Screw	2
14	630898	Screw, Main Adjustment	1

Ref. No.	Part No.	Description	No. Used
15	*630748	Plug, Welch	1
17	*630746	Plug, Welch	2
18	631049	Spring, Valve	1
19	630742	Gasket, Valve Seat	1
20	*630932A	Inlet Needle, Seat, Spring & Gasket Assy. (Incl. Nos. 18 & 19)	1
21	630750	Gasket, Diaphragm	1
22	*630978	Diaphragm Assy. (Incl. No. 21)	1
23	631653	Cover, Diaphragm	1
24	650545	Screw, Diaphragm Cover	4
25	631201	Valve, Check	1
26	631808	Fitting, Fuel Inlet	1
31	631893	Repair Kit (Incl. items marked *)	1

ENGINE TECUMSEH MODEL NO. AH520, TYPE 1584

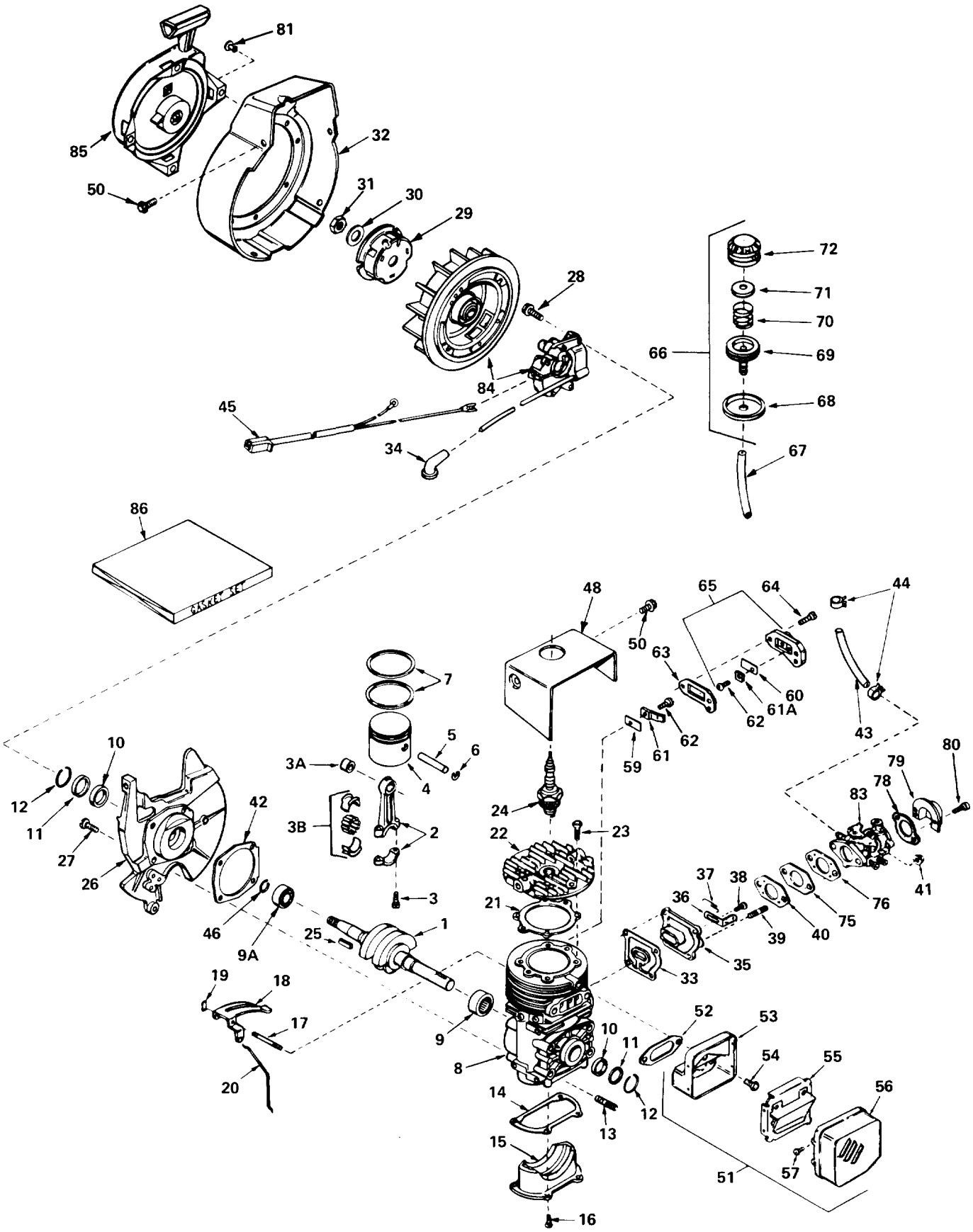

ENGINE TECUMSEH MODEL NO. AH520 TYPE 1584

Ref. No.	Part No.	Part Name	Qty. Req.
1	290489	Crankshaft	1
2	310244	Rod Assy., Connecting (Incl. Nos. 3, 3A & 3B	1
3	650633	Screw, Connecting rod	2
3A	530104A	Bearing, Cartridge	1
3B	530149	Bearing & Liner Set, Needle	1
4	310230	Piston	1
5	310178	Pin, Piston	1
6	310167	Ring, Piston pin retaining	2
7	310190	Ring Set, Piston	1
8	250271	Block Assy., Cylinder (Incl. Nos. 9, 10 thru 13, 17 & 40)	1
9	530105	Bearing, Needle	1
9A	530110	Bearing, Ball	1
10	510105	Seal, Crankshaft	2
11	510106	Retainer, Crankshaft seal	2
12	510109A	Spring, Crankshaft seal retainer	2
13	650796	Stud	4
14	*510270	Gasket, Cover	1
15	570370	Plate, Cover	1
16	650579	Screw, Pan flex hd.	4
17	490276	Shaft, Air vane	1
18	490287	Vane Assy., Air	1
19	490278	Clip, Air vane	1
20	490289	Link, Governor	1
21	*510274	Gasket, Cylinder head	1
22	250240	Head, Cylinder	1
23	650477	Screw, Pan flex hd.	4
24	611005	Plug, Spark (RJ-18Y or equivalent)	1
25	650496	Key, Flywheel	1
26	350388	Base Assy., Shroud (Incl. Nos. 10, 11 & 12)	1
27	650497	Screw, Pan flex hd.	4
28	650747	Screw, Hex washer hd.	2
29	590416	Cup, Starter	1
30	650763	Washer, Spring	1
31	650390	Nut, Flywheel	1
32	350391	Housing, Blower	1
33	*510312	Gasket, Port	1
34	610118	Cover, Spark plug	1
35	570471	Adapter, Cover	1
36	570633	Lever, Adjusting	1
37	570417	Spring, Adjusting lever	1
38	650576	Screw, Pan flex hd.	4
39	650527	Stud, Carburetor	2
40	*510229	Gasket, Carburetor (⅛" thick)	1
41	650457	Nut, Hex.	2
42	*510292	Gasket, Shroud base	1
43	29774	Line, Fuel	1
44	26460	Clamp, Fuel line	2

Ref. No.	Part No.	Part Name	Qty. Req.
45	610999	Harness, Wire	1
46	570630	Ring, Retaining	1
48	350389	Shroud, Cylinder	1
50	650356	Screw, Hex washer hd. powerlok thread.	6
51	390294	Muffler Assy. (Incl. Nos. 53 thru 57)	1
52	*510230	Gasket, Exhaust	1
53	390292	Base, Muffler	1
54	650497	Screw, Pan flex hd.	3
55	390295	Baffle, Muffler	1
56	390296	Cover, Muffler	1
57	650578	Screw, Hex slotted hd. S.T. Type "B".	4
59	470136	Reed, Compression release	1
60	470135	Reed, Compression release	1
61	470151	Plate, Reed hold down	1
61A	470137	Plate, Reed hold down	1
62	650654	Screw, Pan hd. taptite.	2
63	*510263	Gasket, Compression release	1
64	650576	Screw, Pan flex hd.	2
65	570437A	Cover Assy., Compression release (Incl. Nos. 60, 61A & 62)	1
66	570629	Primer Assy. (Incl. Nos. 68 thru 72)	1
67	32180A	Line, Primer	1
68	32312	Retainer, Primer bulb	1
69	32184	Body, Primer	1
70	570443	Spring, Primer bulb	1
71	570444	Washer, Primer bulb	1
72	570442	Bulb, Primer	1
75	570438A	Spacer	1
76	*510241	Gasket, Carburetor (1/16" thick)	1
78	510206	Gasket	1
79	570434	Baffle, Air	1
80	650229	Screw, Rd. hd. Sems.	2
81		Rivet, Pop (3/16" dia.) (Can be purchased locally)	4
83	632035	Carburetor (Incl. No. 76)	1
84	610794A	Magneto (The complete magneto is not available as an assembly. The magneto number is shown for reference purposes only. Order component parts individually, as shown in parts list.)	1
85	590537	Starter Assy., Rewind	1
86	510264D	Gasket Set (Incl. items marked *)	1

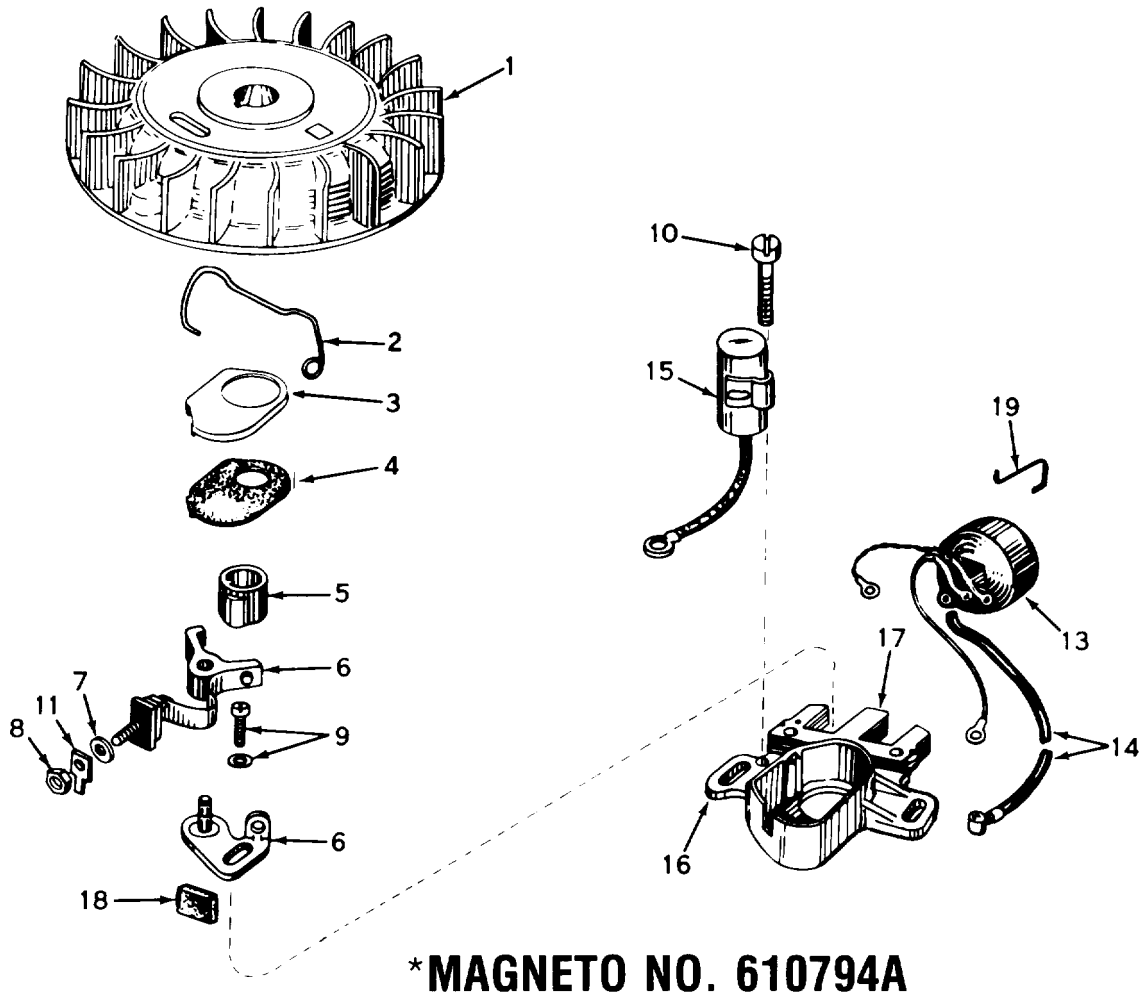

*MAGNETO NO. 610794A

Ref. No.	Part No.	Description	No. Used
1	610781A	Flywheel (Incl. Nos. 3 & 4)	1
2	30551	Spring, Breaker Box Dust Cover	1
3	610947	Cover, Breaker Box Dust	1
4	610948	Gasket, Dust Cover	1
5	30552	Cam, Breaker	1
6	30547A	Breaker Assembly	1
7	610385	Washer, Terminal	1
8	610408	Nut, Terminal	1
9	29181	Screw & Washer Assy., Breaker	1
10	610593	Screw, Condenser Fastening	1

Ref. No.	Part No.	Description	No. Used
11	33356	Tab, Ground Terminal	1
13	30560A	Coil Assembly (Incl. No. 14)	1
14	30554	Wire, Ignition Lead	1
15	30548A	Condenser	1
16	30545	Core & Plate Group	1
17	30561B	Stator Assembly (Incl. Nos. 2, 3, 4, 6 thru 11, 13, 15, 16, 18 & 19)	1
18	30549	Felt, Cam Wiper	1
19	31311	Clip, Coil Locking	1

*The complete magneto is not available as an assembly. The magneto number is shown for reference purposes only. Order component parts individually, as shown in parts list.

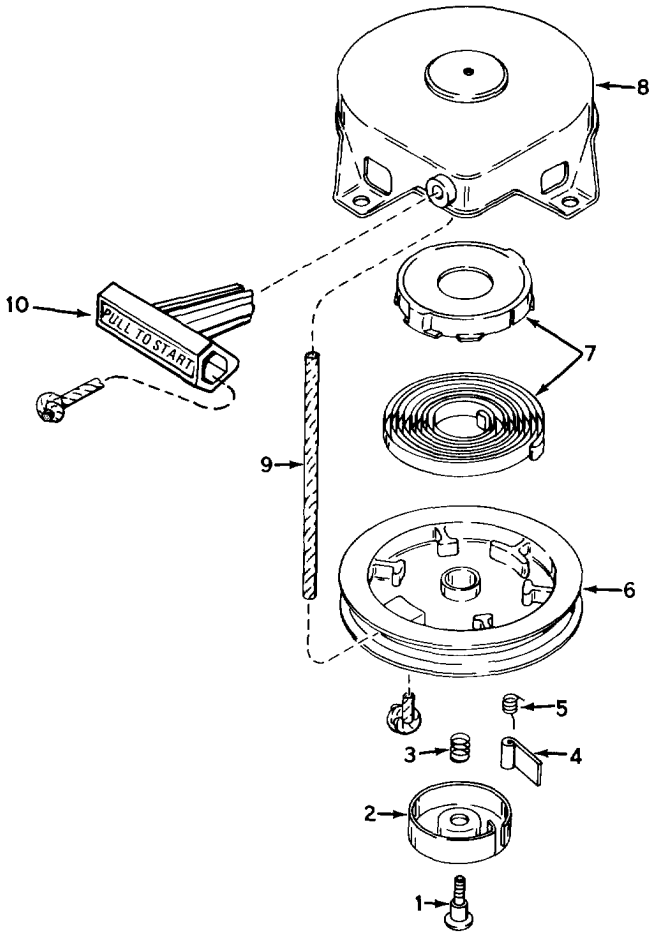

REWIND STARTER NO. 590537

Ref. No.	Part No.	Description	No. Used
1	590409A	Screw, Retainer	1
2	590410	Retainer, R.H.	1
3	590411	Spring, Brake	1
4	590148	Dog, Starter	1
5	590412	Spring, R.H. Dog	1

Ref. No.	Part No.	Description	No. Used
6	590413A	Pulley	1
7	590414	Spring & Keeper Assy.	1
8	590536	Housing Assy., Starter	1
9	590535	Rope, Starter	1
10	590452	Handle Assy., Starter	1


TORO®