Form No. 3326-790

Greensmaster® 1600

Traction Unit

Model No. 04060 – 220000001 and up

Parts Catalog

Ordering Replacement Parts

To order replacement parts, please supply: the part number, the quantity, and the description of each part desired.

Understanding Reference Numbers

Each identified part in an illustration has a reference number. The reference number for a part also appears in the parts list, along with other information about the part.

This catalog uses two special reference number formats, one to indicate parts in a service assembly and another to indicate the quantity of a given part in an illustration.

Service Assembly Reference Numbers

Parts in service assemblies have reference numbers in the form **a:b.** The **a** represents the reference number of the entire service assembly and the **b** represents a sequential number unique to each part within the service assembly.

For example, a wheel assembly might be identified by reference number **6**, the tire by **6:1**, the valve by **6:2**, and the wheel by **6:3**. When you order the assembly identified by reference number 6, you receive all parts identified by reference numbers 6:1, 6:2, and 6:3. However, you may also order any part individually.

Reference numbers of this type appear in illustrations and in part lists.

Reference Numbers Indicating Quantity

In an illustration, if a reference number indicates more than one part, the reference number has the form **nX y.** The **n** represents the quantity of the part, the **X** is the multiplication symbol, and the **y** represents the reference number.

For example, in an illustration, the reference number **2X 37** means that two of the parts identified by reference number 37 are indicated.

© The TORO Company — 2001
All Rights Reserved

Contents

Description	Page
Frame Assembly	3
Engine Mount and Frame Assembly	4
Reel Drive Assembly	5
Reel Assembly	7
Drum Drive Assembly	8
Drum and Basket Assembly	9
Differential Assembly No. 93–9041	10
Inner Crankshaft Assembly	11
Outer Crankshaft Assembly	12
Engine Assembly	13
Bellcrank Assembly	14
Handle and Controls Assembly	15
Roller and HOC Bar Assembly	16
Crankcase Assembly	17
Camshaft and Valve Assembly	18
Ignition Assembly	19
Governor Assembly	20
Carburetor Assembly	21
Air Cleaner and Muffler Assembly	22
Fuel Tank Assembly	23
Decals	24
Special Tools	25

Part Description Abbreviations

Part descriptions in this catalog may include the following abbreviations.

Abbreviation	Meaning
AR	as required
ASM	assembly
CARR	carriage
DEG	degrees
FH	flat head
GA	gauge
HF	hex flange
HH	hex head
HHF	hex head flange
HLH	hex lag head
HJ	hex jam
HOC	height-of-cut
HS	hex socket
HSBH	hex socket button head
HSFH	hex socket flat head
HSH	hex socket head
HWH	hex washer head
HWHTF	hex washer head thread forming
HYD	hydraulic
INC	incorporated
LH	left hand
NI	nylon insert
PPH	Phillips pan head
PTH	Phillips truss head
PTO	power take off
RH	right hand
SFH	slotted fillister head
SHH	slotted hex head
SQH	square head
SHWH	slotted hex washer head
SPH	slotted pan head
SRH	slotted round head
STD	standard
TAP	self tapping
TTH	Torx truss head
WH	wing head

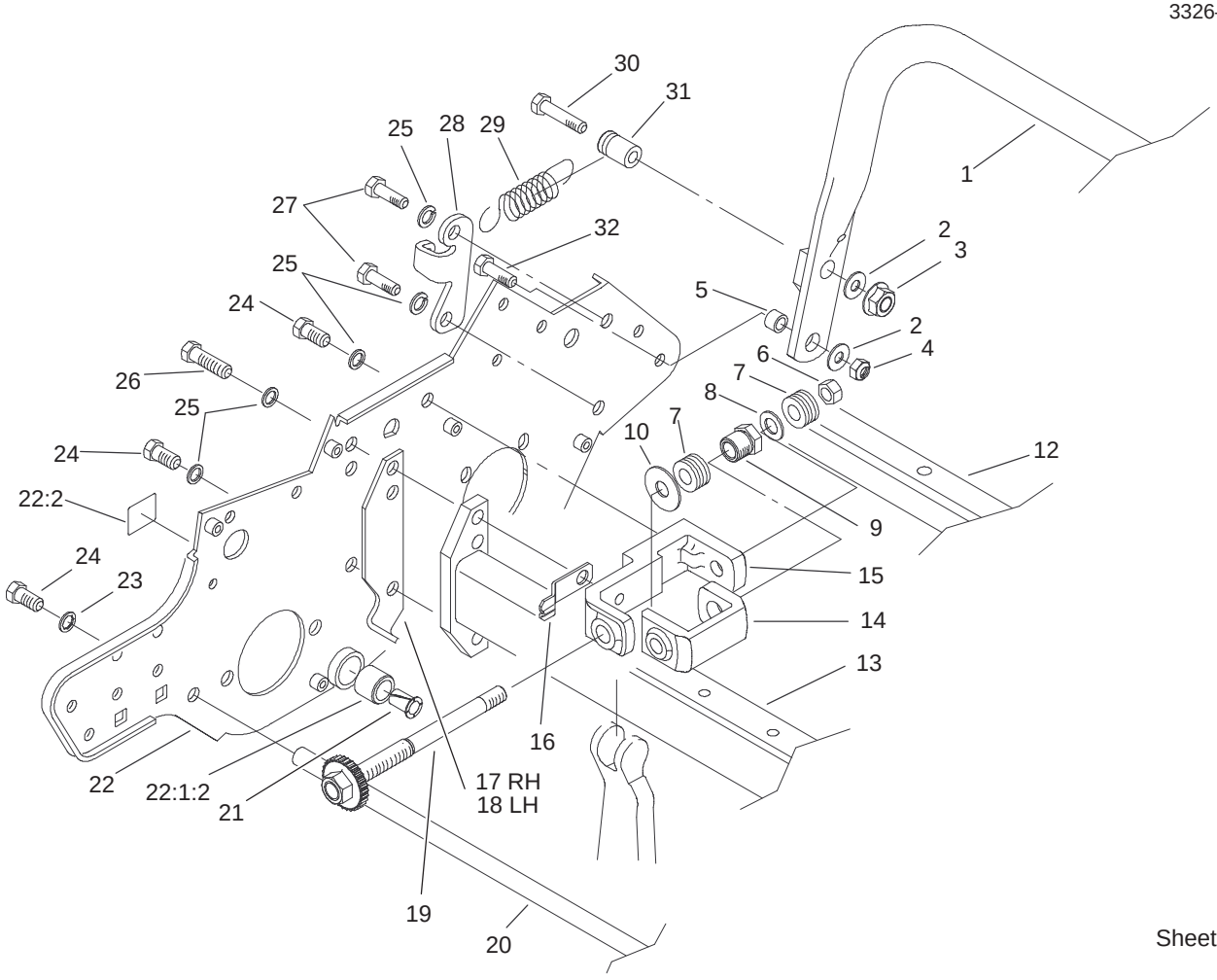

Sheet No.:2

Frame Assembly

Ref. No.	Part No.	Qty.	Description
1	93–9019–03	1	Kickstand
2	3256–2	3	Washer–Flat
3	32128–25	1	Nut–Flange
4	3296–29	2	Nut–Lock, NI
5	65–7910	2	Spacer
6	3296–48	2	Nut–Lock NI
7	93–9043	32	Washer–Spring, Belleville
8	94–5858	2	Washer
9	98–5913	2	Nut–Spring
10	94–5859	2	Washer–Hardened
12	93–9026–01	1	Frame–Rear
13	93–9032–01	1	Frame–Front
14	98–5912	2	Channel–Adjuster, Bedbar
15	94–5854	2	Frame–Adjuster, Bedbar
16	94–5856	2	Spring–Detent
17	88–7100	1	Spacer–RH
18	88–7090	1	Spacer–LH
19	94–5873	2	Screw ASM
20	94–5867	1	Rod–Frame
21	52–2890	2	Bushing–Nylon
22	94–9004	1	RH Side Plate ASM
☆22:1		1	RH Side Plate / Bushing ASM

Ref. No.	Part No.	Qty.	Description
22:1:2	63–9510	1	Bushing
22:2	93–9356	2	Decal–Warning, Belt
22:2	93–9389	2	Decal–Warning, Belt (Japan)
23	3254–6	2	Washer–Lock, Internal
24	323–4	6	Screw–HH
25	3253–21	8	Washer–Lock
26	323–6	2	Screw–HH
27	323–5	2	Screw–HH
28	65–7890	1	Bracket
29	65–7880	1	Spring–Extension
30	322–10	1	Screw–HH
31	65–7900	1	Retainer–Spring
32	322–5	2	Screw–HH

☆ Not serviced separately

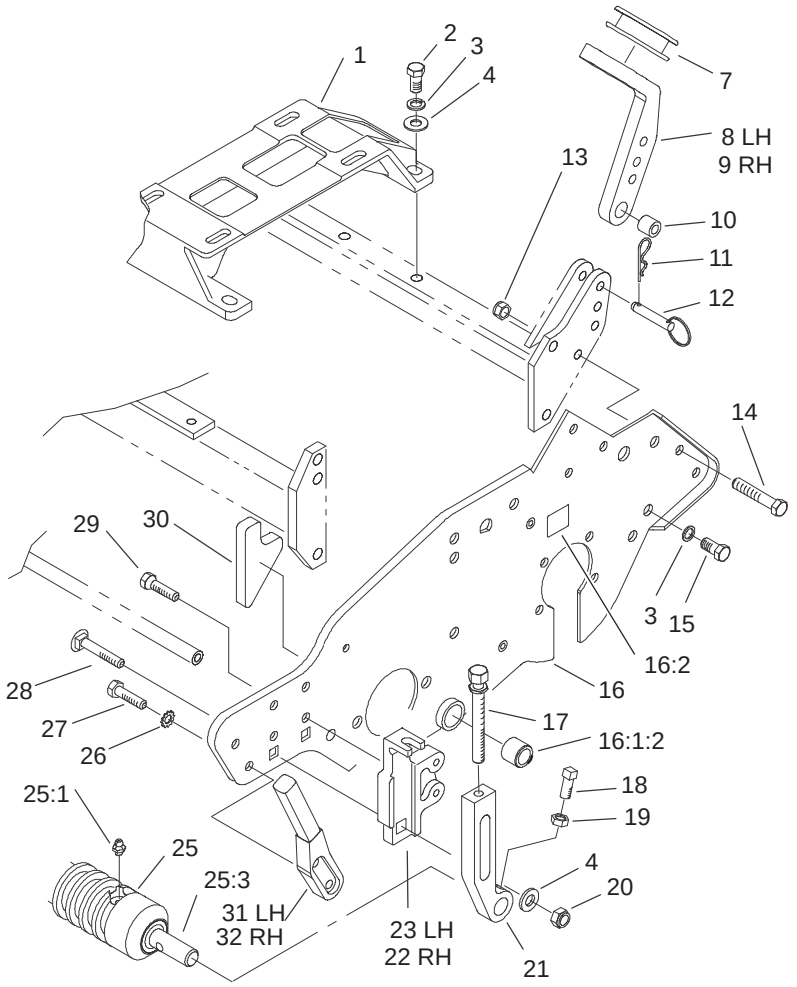

Sheet No.:3

Engine Mount and Frame Assembly

Ref. No.	Part No.	Qty.	Description
1	88–7670	1	Mount–Engine
2	323–5	4	Screw–HH
3	3253–21	8	Washer–Lock
4	3256–24	6	Washer–Flat
7	65–7510	2	Grommet–Handle
8	93–6038	1	Arm–Handle Support, LH
9	93–6037	1	Arm–Handle Support, RH
10	93–6024	2	Bushing–Support, Handle
11	3290–467	2	Pin–Hair
12	93–6029	2	Pin–Clevis, Ring
13	3296–29	2	Nut–Lock, NI
14	322–9	2	Screw–HH
15	323–4	4	Screw–HH
16	94–9005	1	LH Side Plate ASM
☆16:1		1	LH Side Plate / Bushing ASM
16:1:2	63–9510	1	Bushing
16:2	93–9356	1	Decal–Warning, Belt
16:2	93–9389	1	Decal–Warning, Belt (Japan)
17	93–6051	2	Screw–HOC
18	3242–4	2	Screw–Set, SQH
19	3218–2	2	Nut–Jam

Ref. No.	Part No.	Qty.	Description
20	32128–21	2	Nut–HF
21	93–6090	2	Arm–HOC
21	99–4286	2	Arm–HOC, Extended
22	93–6048	1	Bracket–HOC, RH
23	93–6049	1	Bracket–HOC, LH
25	93–9039	1	Weihle Roller ASM
25:1	302–5	2	Fitting–Grease
25:3	52–3180	2	Bearing–Roller, Front
26	3255–8	4	Washer–Lock/Ext
27	322–2	4	Screw–HH
28	3231–5	2	Screw–CARR
29	92–8914	4	Bolt–Tapered Face
30	93–6064	1	Seal–Catcher, Grass
31	93–9018	1	Rod–Basket, LH
32	93–9017	1	Rod–Basket, RH

☆ Not serviced separately

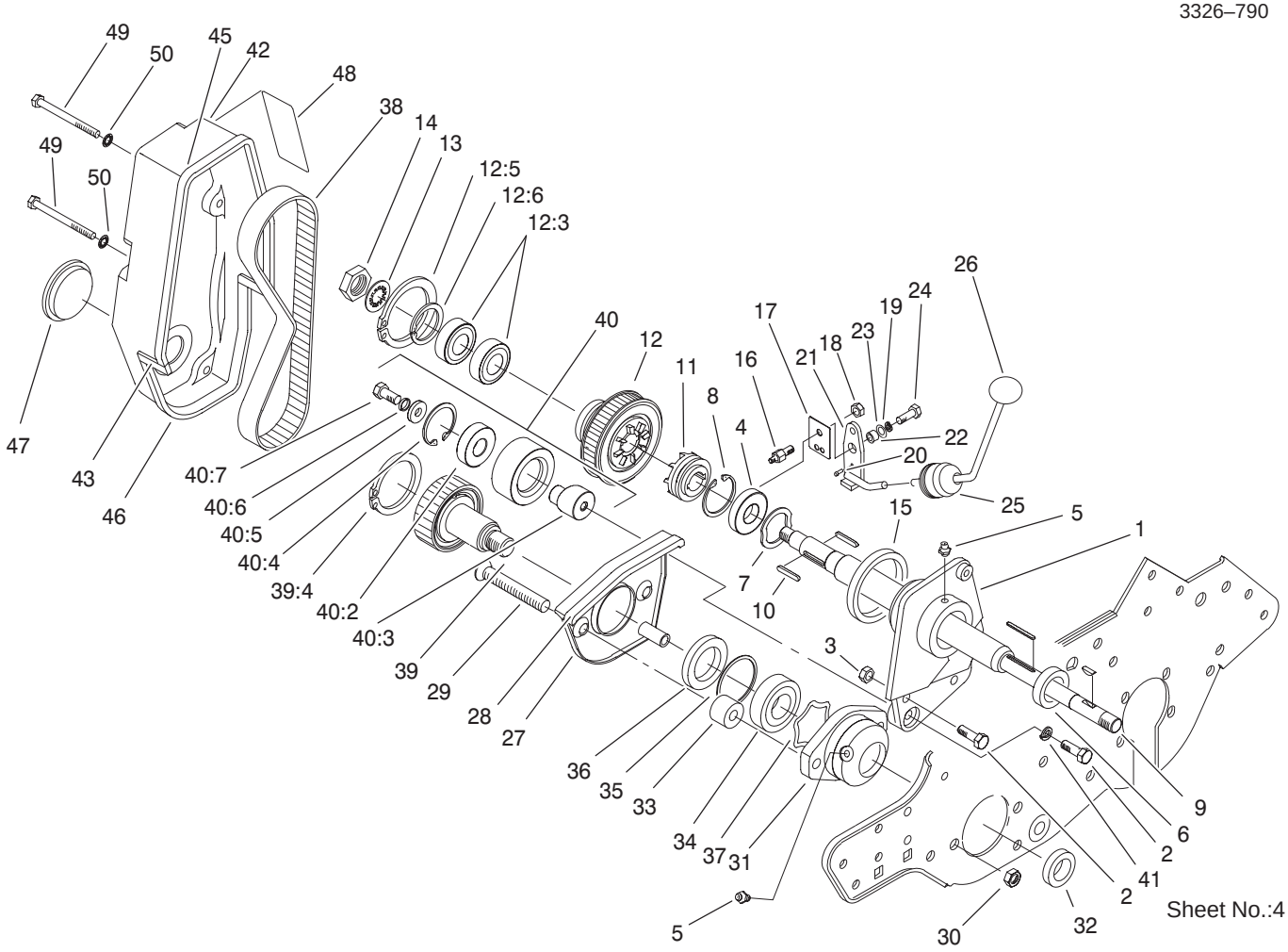

Reel Drive Assembly

Ref. No.	Part No.	Qty.	Description
1	92–8013	1	Housing–Clutch
2	322–5	3	Screw–HH
3	3296–29	2	Nut–Lock, NI
4	251–318	1	Bearing
5	302–5	2	Fitting–Grease
6	253–118	1	Seal–Oil
7	88–7720	1	Spring–Wave
8	32120–11	1	Ring–Retaining
9	94–5872	1	Shaft–Power
10	88–7150	2	Key
11	65–6940	1	Clutch–Slider, Jaw
12	88–7830	1	Clutch & Pulley ASM
12:3	251–336	2	Bearing
12:5	32151–95	1	Ring–Retaining
12:6	32151–89	1	Ring–Retaining, Bowed
13	3254–4	1	Washer–Lock/Int
14	3220–5	1	Nut–Jam
15	65–6970	1	Seal–Felt
16	93–9014	1	Pin–Clutch, Actuator
17	65–6290	1	Spring–Detent, Clutch
18	3296–42	1	Nut–Lock, NI
19	3253–3	1	Washer–Lock
20	95–5731	1	Screw–Drive
21	88–7170	1	Lever–Clutch
22	88–7860	1	Spacer–Clutch

Ref. No.	Part No.	Qty.	Description
23	3290–414	1	Washer–Belleville
24	321–4	1	Screw–HH
25	65–8960	1	Boot–Clutch
26	233–69	1	Knob
27	65–7190–01	1	Cover–Arm, Groomer
28	65–7131	1	Seal–Cover, Strip
29	3289–23	2	Capscrew
30	3296–39	2	Nut–Lock, NI
31	65–8640	1	Housing–Bearing
32	253–96	1	Seal–Oil
33	65–8290	2	Standoff–Cover
34	251–342	1	Bearing–Ball
35	32151–92	1	Ring–Retaining
36	253–163	1	Seal
37	3290–485	1	Washer–Wave
38	65–6200	1	Belt
39	88–7840	1	Pulley & Drive ASM
39:4	32151–95	1	Ring–Retaining
40	88–7850	1	Idler Pulley ASM
40:2	38–7820	1	Bearing–Ball
40:3	88–7190	1	Spacer
40:4	32120–42	1	Ring–Retaining
40:5	88–7200	1	Washer–Flat
40:6	3253–4	1	Washer–Lock
40:7	322–3	1	Screw–HH
41	3253–4	1	Washer–Lock

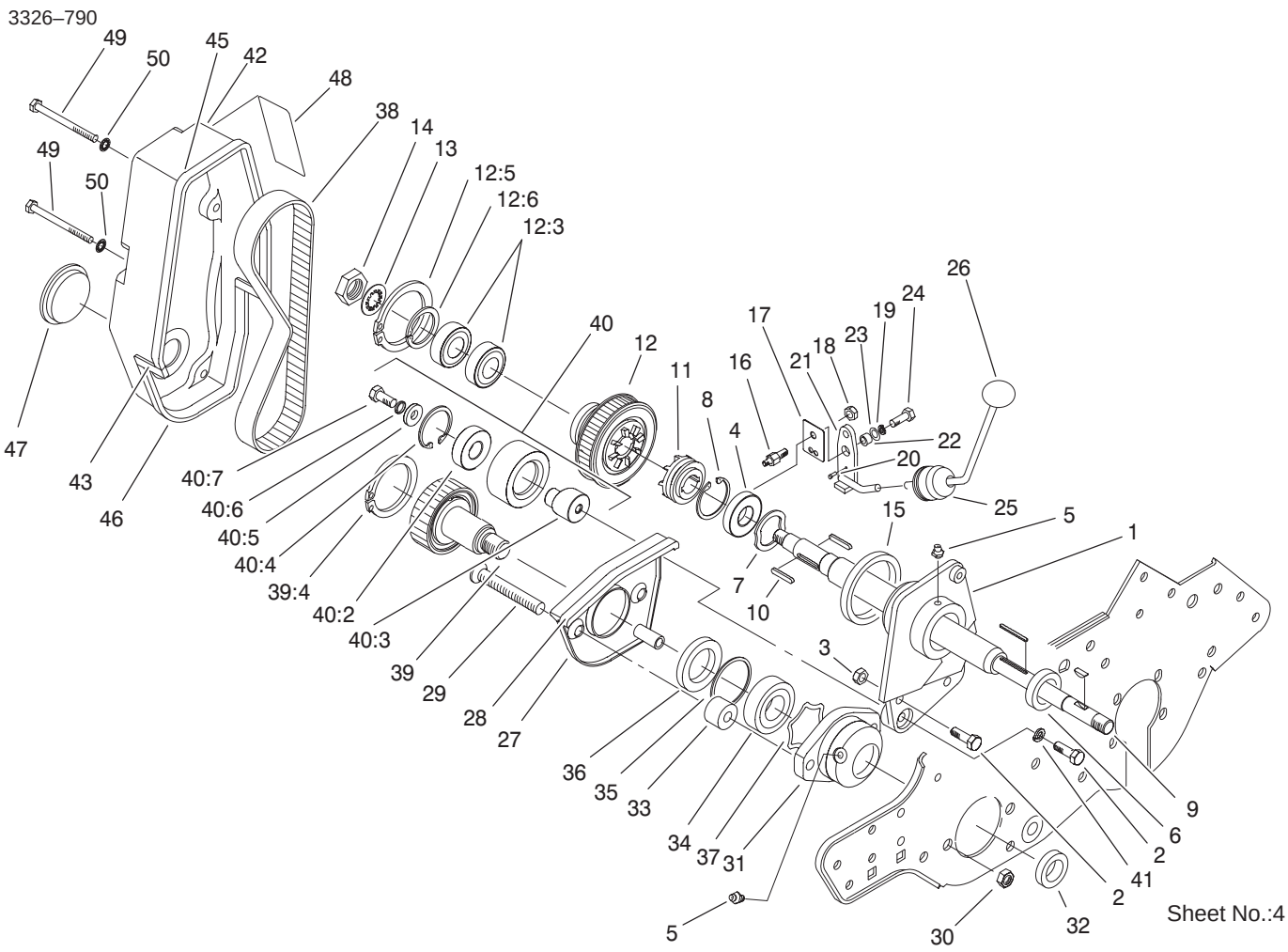

Reel Drive Assembly (Continued)

Ref. No.	Part No.	Qty.	Description
42	88–7700–01	1	Cover–Reel, Drive
43	88–7770	2	Strip–Seal, Front
45	88–7790	1	Strip–Seal, Upper
46	88–7800	1	Strip–Seal, Lower
47	237–160	1	Plug–Rubber
48	92–4817	1	Decal–Engagement, Reel (Japan)
48	93–7346	1	Decal–Engagement, Reel
49	321–20	4	Screw–HH
50	3254–8	4	Washer–Lock

Ref. No.	Part No.	Qty.	Description

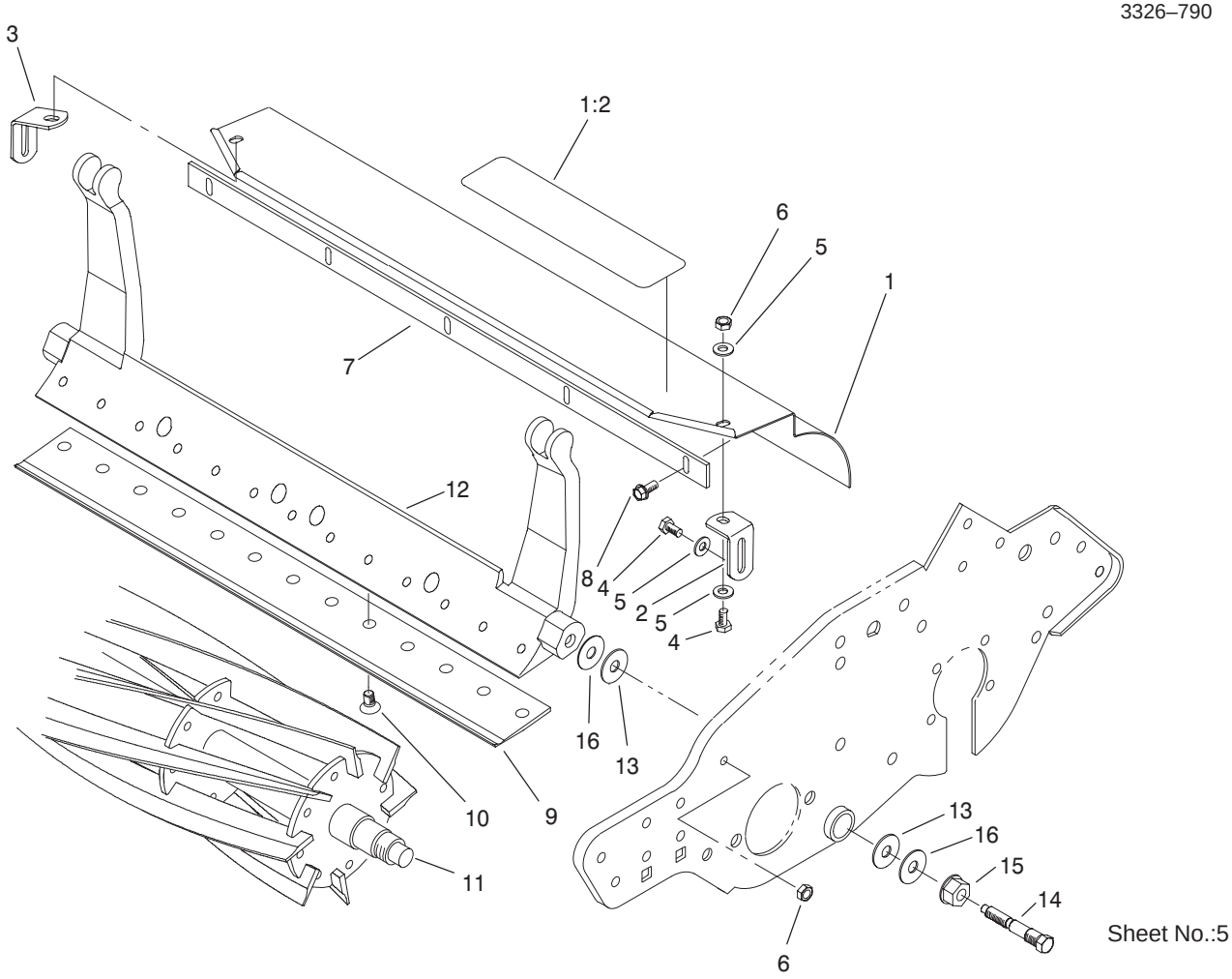

Sheet No.:5

Reel Assembly

Ref. No.	Part No.	Qty.	Description
1	94–9009	1	Grass Shield ASM
1:2	84–6560	1	Decal–Warning (Japan)
1:2	93–8064	1	Decal–Danger (Europe)
2	65–6450	1	Bracket–LH
3	65–6460	1	Bracket–RH
4	321–3	4	Screw–HH
5	3256–22	6	Washer–Flat
6	3296–42	4	Nut–Lock, NI
7	94–5879	1	Bar–Cut Off
8	104–2065	6	Screw–HWH
*9	104–2646	1	Bedknife, Highcut
9	93–9015	1	Bedknife, Lowcut
*9	94–5885	1	Bedknife, Tournament
10	57–4910	16	Screw
11	95–0900	1	8 Blade Reel ASM
12	93–9049–01	1	Bedbar–Machine
13	52–2900	4	Washer
14	65–6270	2	Bolt–Bedbar
15	32128–48	2	Nut–HHF
16	52–2860	4	Washer

Ref. No.	Part No.	Qty.	Description

* Not illustrated

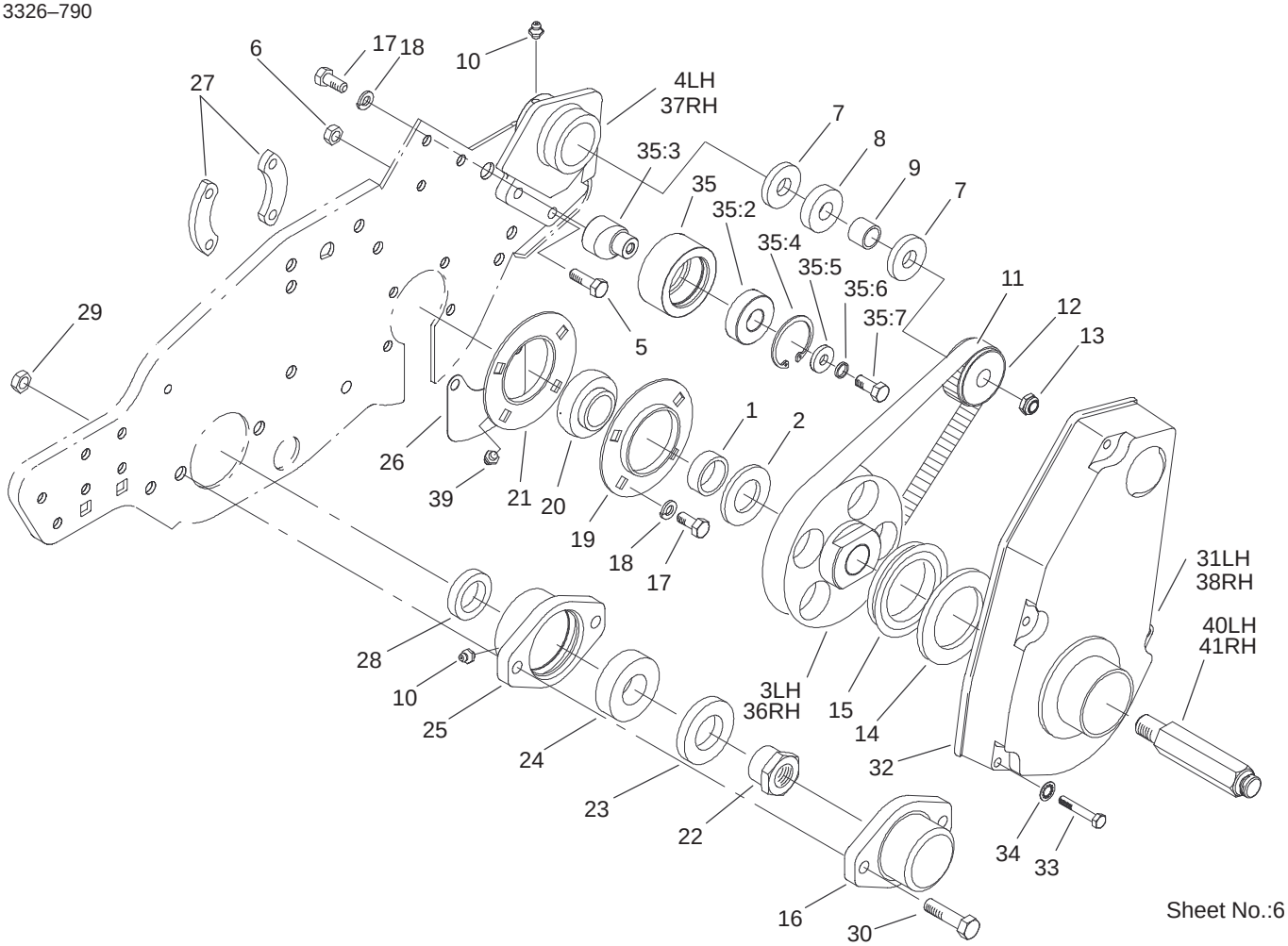

Drum Drive Assembly

Ref. No.	Part No.	Qty.	Description
1	88–7530	2	Spacer
2	88–7540	2	Washer–Backup
3	105–5365	1	Pulley–Drum, LH
4	88–7470	1	Housing–LH
5	322–5	4	Screw–HH
6	3296–29	4	Nut–Lock, NI
7	253–160	4	Seal–Grease
8	251–338	2	Bearing
9	86–7130	2	Spacer–Pulley
10	302–5	3	Fitting–Grease
11	65–6210	2	Belt
12	65–6660	2	Pulley
13	3296–57	2	Nut–Lock, NI
14	94–9018	2	Washer–Plastic
15	253–161	2	Seal–V–Ring
16	65–6220–01	1	Cover–End, Reel
17	322–3	10	Screw–HH
18	3253–4	10	Washer–Lock
19	65–6590	2	Flangette
20	88–7880	2	Bearing
21	95–0923	2	Flangette
22	92–7302	1	Nut – Bearing, Lock
23	253–163	1	Seal
24	251–342	1	Bearing–Ball
25	65–8640	1	Housing–Bearing
26	65–8720	2	Closure–Plate, Side

Ref. No.	Part No.	Qty.	Description
27	65–8730	4	Clamp–Bearing
28	253–96	1	Seal–Oil
29	3296–39	2	Nut–Lock, NI
30	323–7	2	Screw–HH
31	88–7680–01	1	Cover–Belt Drum, LH
32	88–7810	2	Seal–Strip, Drum Cover
33	321–11	8	Screw–HH
34	3254–8	8	Washer–Lock
35	88–7850	2	Idler Pulley ASM
35:2	38–7820	1	Bearing–Ball
35:3	88–7190	1	Spacer
35:4	32120–42	1	Ring–Retaining
35:5	88–7200	1	Washer–Flat
35:6	3253–4	1	Washer–Lock
35:7	322–3	1	Screw–HH
36	105–5364	1	Pulley–Drum, RH
37	88–7490	1	Housing–RH,
38	88–7690–01	1	Cover–Drum Belt, RH
39	302–40	2	Fitting–Grease
40	88–7580	1	Shaft–Wheel, Transport LH
41	88–7590	1	Shaft–Wheel, Transport RH

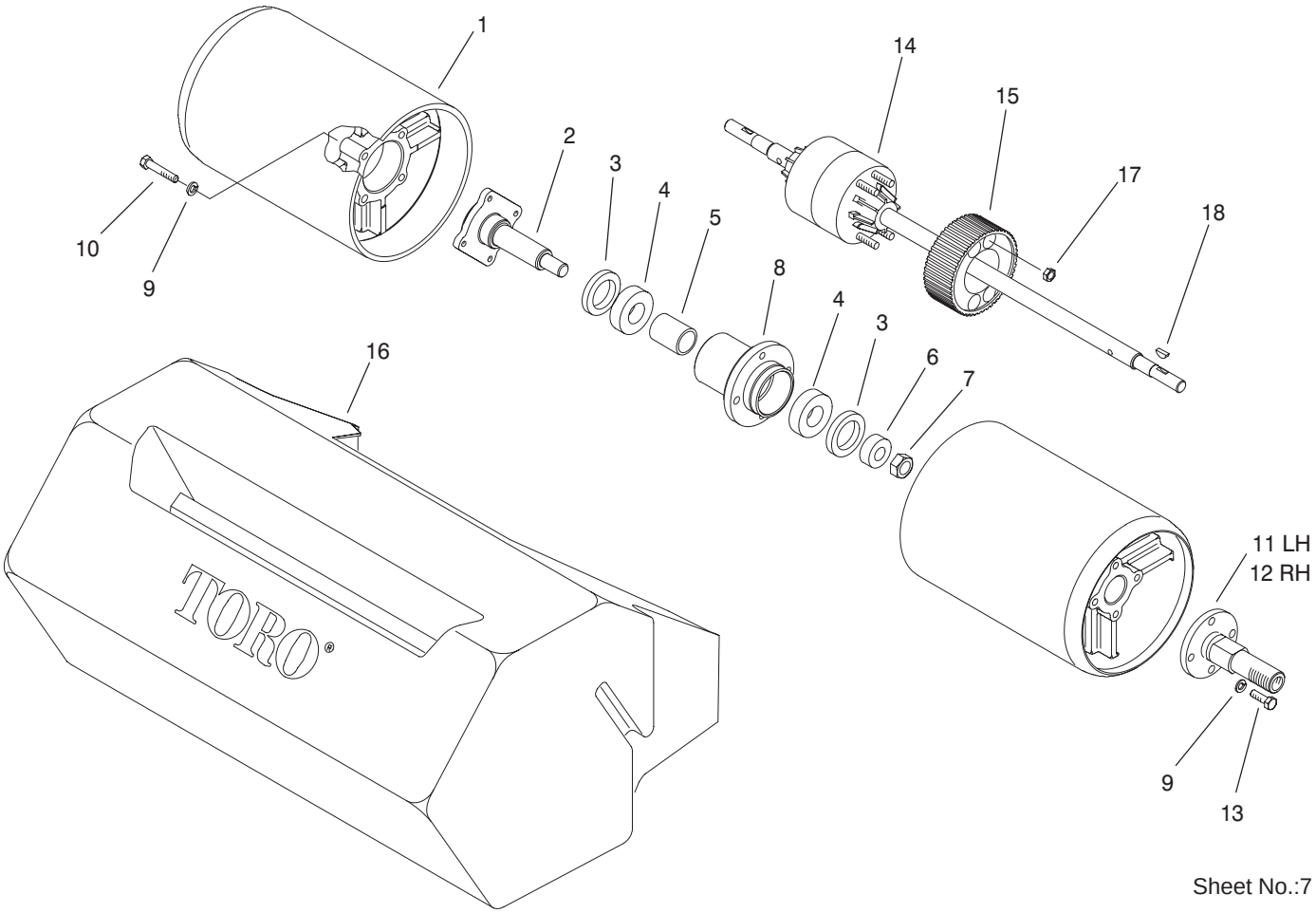

Sheet No.:7

Drum and Basket Assembly

Ref. No.	Part No.	Qty.	Description
1	93–9042	2	Drum–Long
2	94–5850	1	Spindle–Drum
3	253–159	2	Seal
4	251–82	2	Bearing–Ball
5	65–6520	1	Spacer
6	65–6530	1	Spacer–Ride, Seal
7	3296–33	1	Nut–Lock, NI
8	94–5852	1	Hub–Drum
9	3253–4	16	Washer–Lock
10	322–9	8	Screw–HH
11	88–7520	1	Shaft–Extension, Drum
12	88–7510	1	Shaft–Extension, Drum
13	322–5	8	Screw–HH
14	93–9041	1	Differential
15	65–9120	1	Pulley–Housing, Differential
16	94–5893	1	Basket ASM
*16:1	3290–409	9	Rivet
*16:3	94–5894	1	Channel–Basket
17	3296–47	4	Nut–Lock, NI
18	3257–30	2	Key–Woodruff

Ref. No.	Part No.	Qty.	Description

* Not illustrated

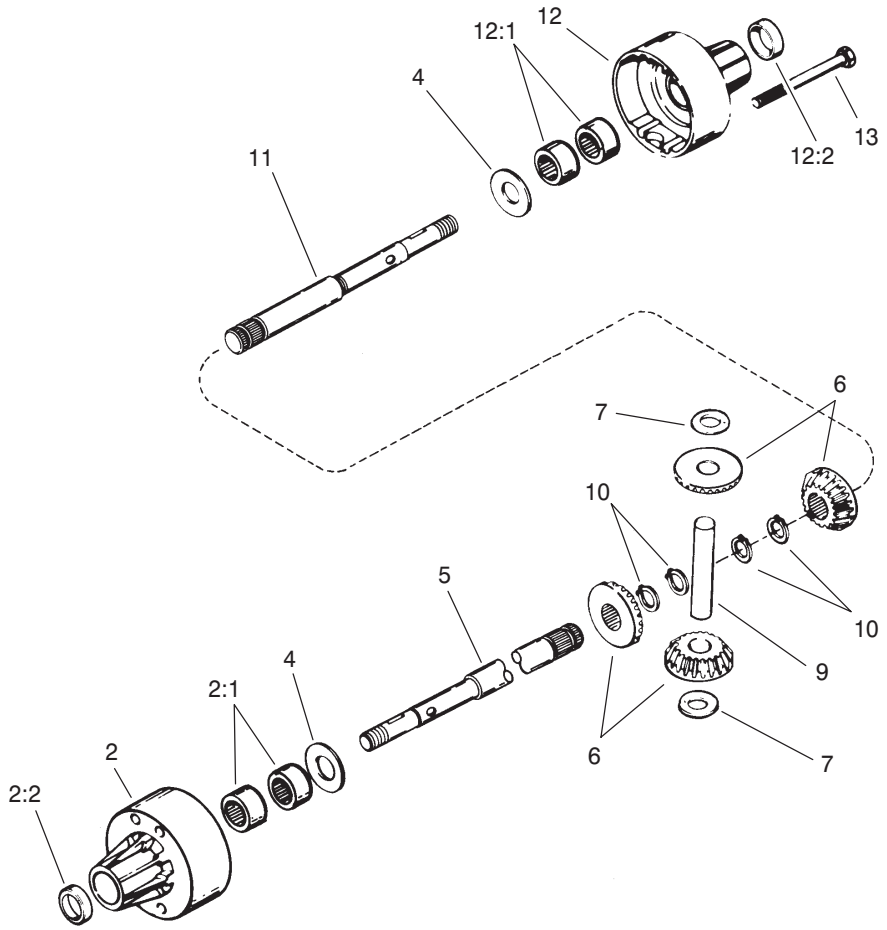

Sheet No.:A1
T–3858

Differential Assembly No. 93–9041

Ref. No.	Part No.	Qty.	Description
2	95–5741	1	Carrier–Differential
2:1	95–5738	4	Bearing–Needle
2:2	95–5737	2	Seal–Oil
4	95–5745	2	Washer
5	95–5743	1	Axle–Long
6	104–0503	1	Gear Set–Differential
7	95–5744	2	Washer–Flat
9	95–5747	1	Pin–Drive
10	95–5746	4	Ring–Retaining
11	95–5742	1	Axle–Short
12	95–5740	1	Carrier–Differential
12:1	95–5738	4	Bearing–Needle
12:2	95–5737	2	Seal–Oil
13	95–5739	4	Screw
*14	95–5734	1	Grease

Ref. No.	Part No.	Qty.	Description

* Not illustrated

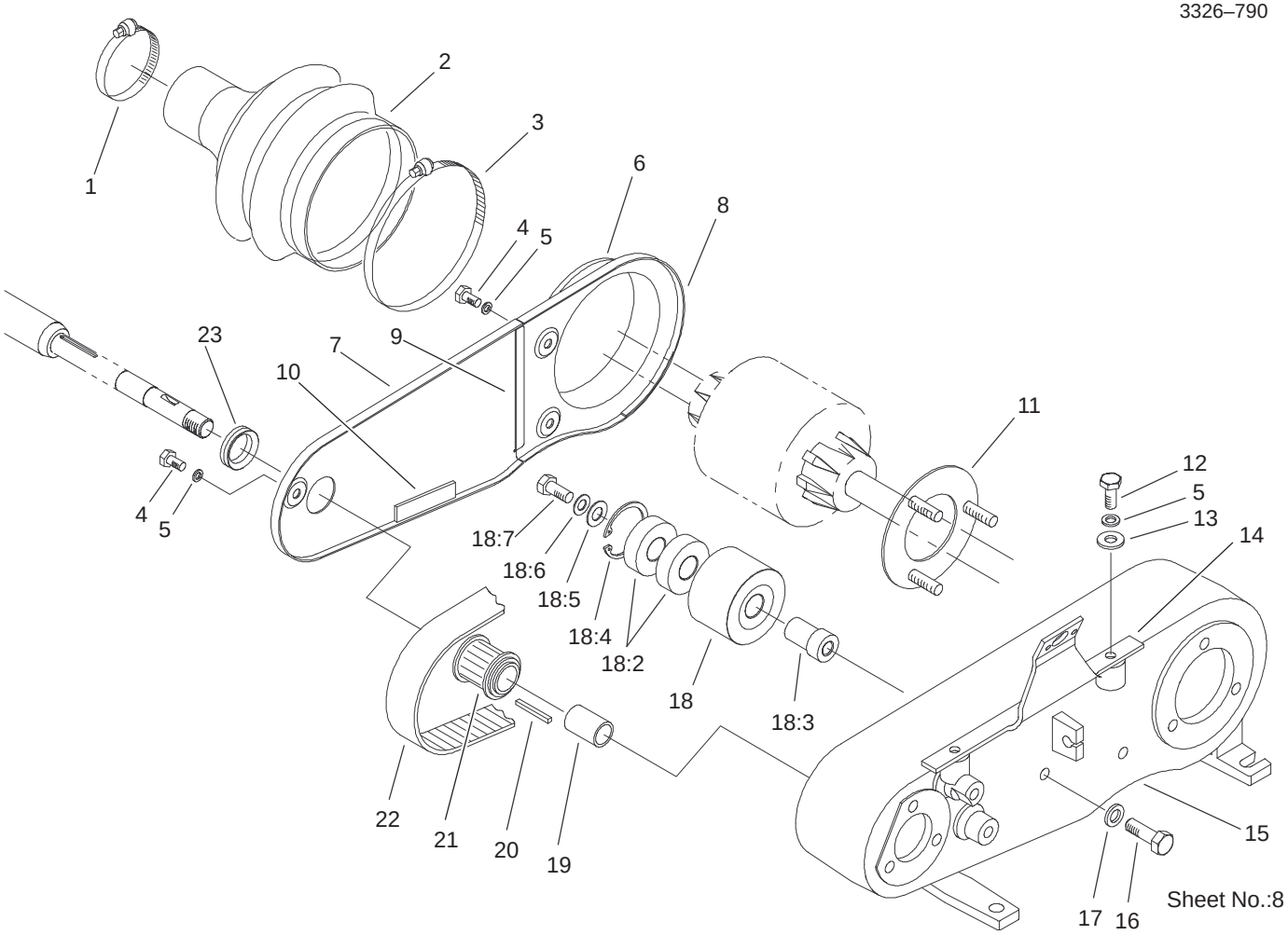

Inner Crankshaft Assembly

Ref. No.	Part No.	Qty.	Description
1	2412–139	1	Clamp–Hose
2	94–5866	1	Boot–Differential
3	2412–140	1	Clamp–Hose
4	321–2	3	Screw–HH
5	3253–3	5	Washer–Lock
6	88–7250–03	1	Cover–Box, Rear
7	88–7240–03	1	Cover–Box, Front
8	65–6902	1	Strip–Seal, Cover
9	65–6903	1	Strip–Seal, Cover
10	65–6901	1	Strip–Seal, Cover
11	65–6720	1	Plate–Screw
12	321–3	2	Screw–HH
13	3256–22	2	Washer–Flat
14	93–1448	1	Bracket Cover ASM
15	88–7230	1	Housing–Shaft, Counter
16	322–5	1	Screw–HH
17	3253–4	1	Washer–Lock
18	88–7870	1	Idler Pulley ASM
18:2	38–7820	2	Bearing–Ball
18:3	88–7380	1	Spacer–Pulley
18:4	32120–42	1	Ring–Retaining
18:5	88–7200	1	Washer–Flat
18:6	3253–4	1	Washer–Lock
18:7	322–3	1	Screw–HH
19	86–7140	1	Spacer

Ref. No.	Part No.	Qty.	Description
20	65–6850	1	Key–Square
21	65–8910	1	Pulley–Countershaft
22	65–9080	1	Belt
23	88–7710	1	Seal–V–Ring

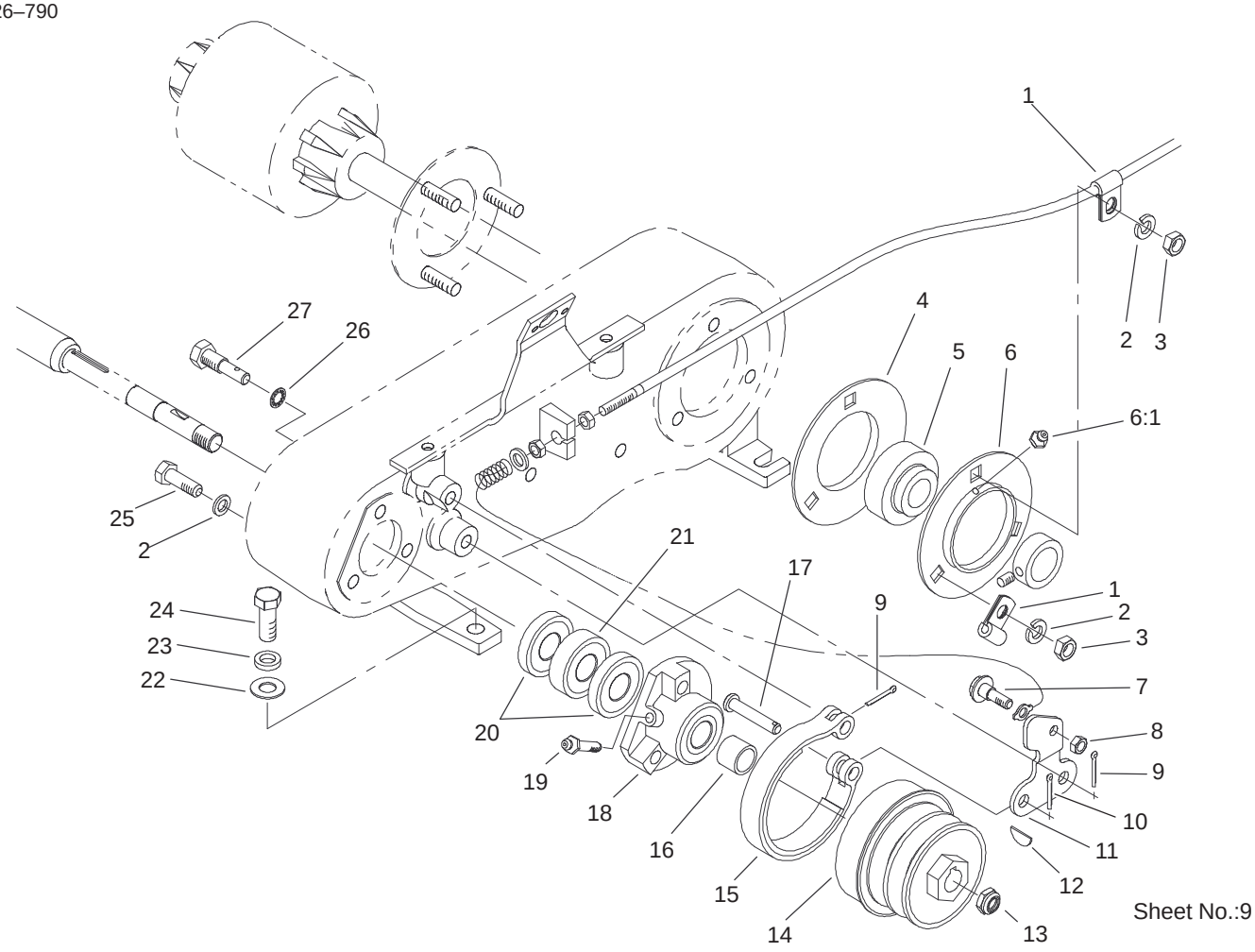

Outer Crankshaft Assembly

Ref. No.	Part No.	Qty.	Description
1	88–7970	1	Clip
2	3253–4	6	Washer–Lock
3	3218–2	3	Nut–Jam
4	65–6710	1	Flangette
5	251–343	1	Bearing–Ball
6	65–6700	1	Flangette–Lube
6:1	302–65	1	Zerk
7	11–9030	1	Screw–Shoulder
8	3296–42	1	Nut–Lock, NI
9	3272–6	2	Pin–Cotter
10	3272–8	1	Pin–Cotter
11	65–8610	1	Lever–Brake
12	3257–30	1	Key–Woodruff
13	3296–57	1	Nut–Lock, NI
14	92–9212	1	Pulley–Shaft, Input
15	65–8700	1	Band–Brake
16	86–7130	1	Spacer–Pulley
17	283–75	1	Pin–Clevis
18	65–6760	1	Housing–Bearing
19	302–64	1	Fitting–Grease
20	253–160	2	Seal–Grease
21	251–338	1	Bearing
22	3256–24	4	Washer–Flat
23	3253–21	4	Washer–Lock
24	323–5	4	Screw–HH
25	322–5	3	Screw–HH

Ref. No.	Part No.	Qty.	Description
26	3254–6	2	Washer–Lock, Internal
27	65–6810	2	Support–Brake

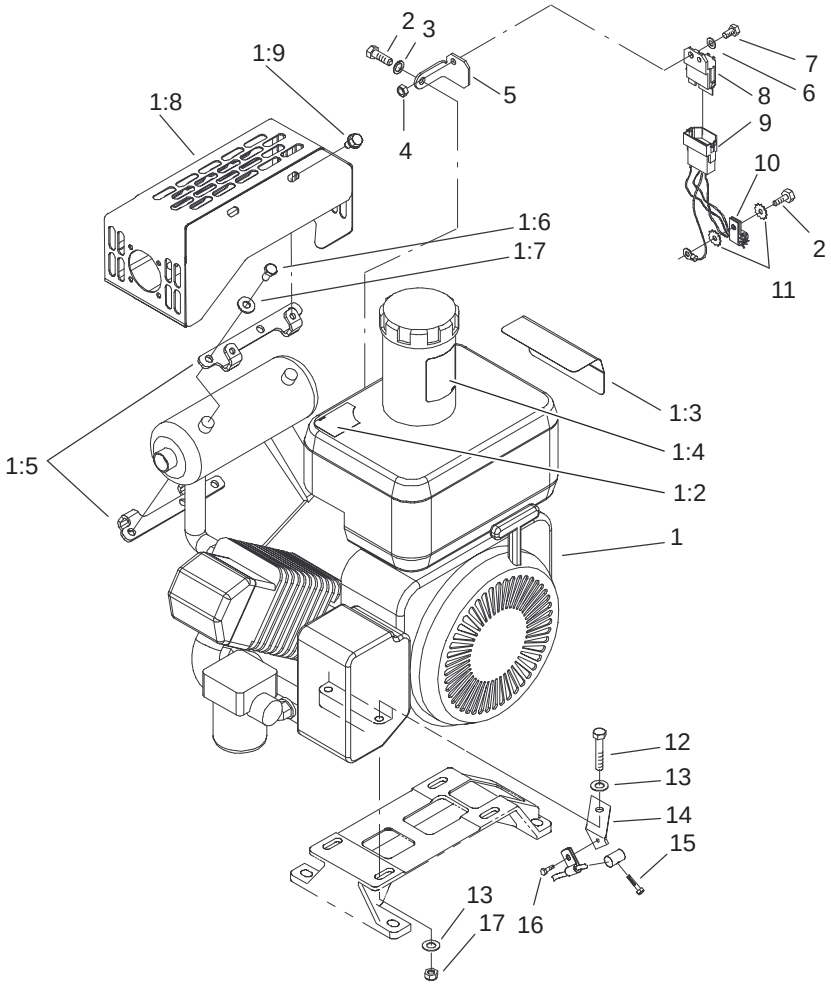

Sheet No.:10

Engine Assembly

Ref. No.	Part No.	Qty.	Description
1	105–5355	1	Engine ASM
1:2	105–5309	1	Decal–Hot Surface
1:2	83–2560	1	Decal–Surface, Hot (Japan)
1:3	92–4813	1	Decal–Danger (Japan)
1:3	93–7348	1	Decal–Danger
1:4	93–9886	1	Decal–Fuel
1:5	104–9771–03	2	Bracket–Guard, Muffler
1:6	33113–012	4	Screw–HH
1:7	3256–22	4	Washer–Flat
1:8	104–9784–03	1	Guard–Muffler
1:9	104–2628	4	Screw–HWH
2	33114–016	2	Screw–HH
3	3253–4	1	Washer–Lock
4	3296–42	1	Nut–Lock, NI
5	94–5861	1	Bracket–Module
6	3256–22	1	Washer–Flat
7	321–3	1	Screw–HH
8	94–3431	1	Module–Interlock
9	105–5351	1	Harness–Wire, Module
10	2412–134	1	R–Clamp
11	3255–9	2	Washer–Lock/Ext
12	322–9	4	Screw–HH
13	3256–56	5	Washer–Flat

Ref. No.	Part No.	Qty.	Description
14	88–7960	1	Bracket–Cable, Throttle
15	94–9015	1	Screw–HH
16	104–2065	1	Screw–HWH
17	3296–29	4	Nut–Lock, NI

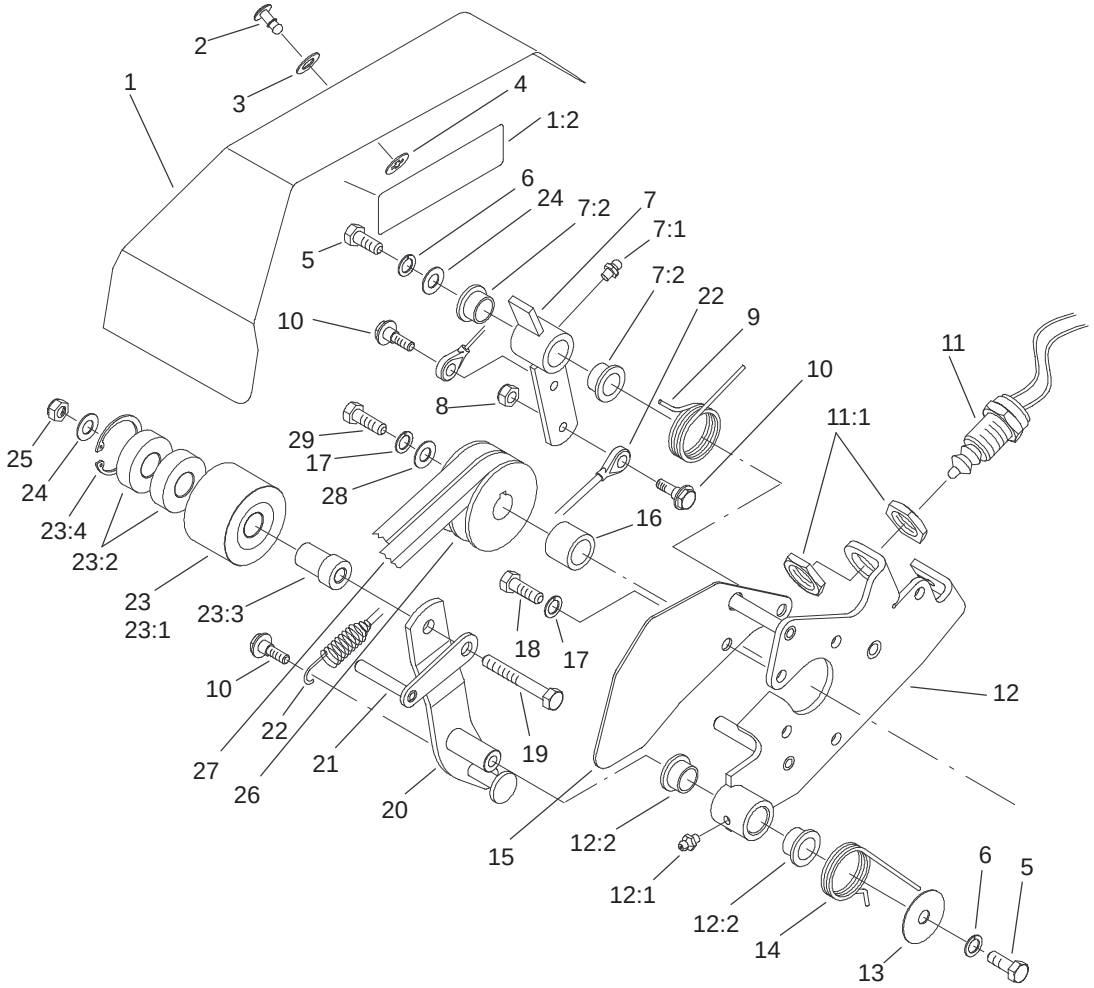

Sheet No.:11

Bellcrank Assembly

Ref. No.	Part No.	Qty.	Description
1	94–9007	1	Bellcrank Cover ASM
1:2	84–7280	1	Decal–Danger, Japan
1:2	93–7273	1	Decal–Danger
2	93–6074	1	Stud
3	3256–2	1	Washer–Flat
4	93–6073	1	Retainer
5	323–4	2	Screw–HH
6	3253–21	2	Washer–Lock
7	93–6014	1	Lever ASM
7:1	302–5	1	Fitting–Grease
7:2	65–8770	2	Bushing–Bellcrank
8	3296–42	3	Nut–Lock, NI
9	93–6011	1	Spring–Torsion
10	11–9030	3	Screw–Shoulder
11	87–5490	1	Switch–Clutch
11:1	3218–20	2	Nut–Jam
12	93–6015	1	Clutch Bracket ASM
12:1	302–5	1	Fitting–Grease
12:2	65–8770	2	Bushing–Bellcrank
13	93–6099	1	Washer
14	93–6012	1	Spring–Torque,Clutch Lever
15	93–6013–03	1	Shield–Belt
16	65–8260	1	Spacer–Shaft, Engine
17	3253–4	6	Washer–Lock
18	33114–016	5	Screw–HH

Ref. No.	Part No.	Qty.	Description
19	323–11	1	Screw–HH
20	93–6003–03	1	Lever–Clutch
21	95–0922	1	Guide–Belt
22	93–9024	1	Cable Link ASM
23	98–7296	1	Idler Pulley ASM
23:1	98–7297	1	Pulley–Idler
23:2	38–7820	2	Bearing–Ball
23:3	88–7350	1	Bushing–Pulley
23:4	32120–42	1	Ring–Retaining
24	3256–56	5	Washer–Flat
25	3296–39	1	Nut–Lock, NI
26	92–9216	1	Pulley–Drive, Input
27	92–9218	1	V–Belt (Matched Set)
28	65–8270	1	Washer
29	33114–025	1	Screw–HH

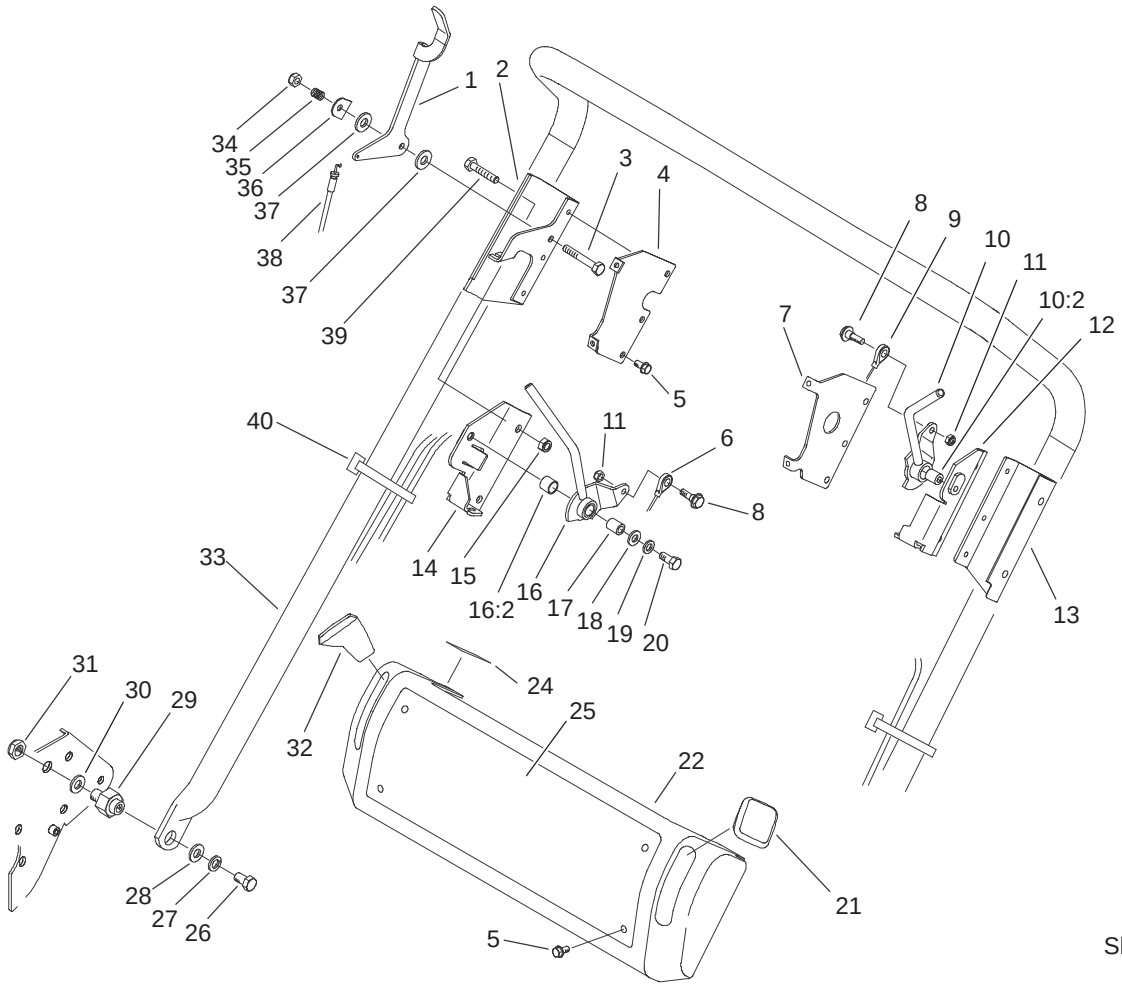

Sheet No.:12

Handle and Controls Assembly

Ref. No.	Part No.	Qty.	Description
1	93–6017	1	Lever–Throttle
2	95–0908–03	1	Bracket–Clutch, Skid
3	321–8	1	Screw–HH
4	93–6046–03	1	Bracket–Console, RH
5	93–6083	10	Screw–HWH
6	94–5870	1	Cable Clutch ASM
7	93–6047–03	1	Bracket–Console, LH
8	11–9030	2	Screw–Shoulder
9	94–5871	1	Cable Brake ASM
10	93–6058	1	Brake Lever ASM
10:2	256–206	1	Bushing
11	3296–42	2	Nut–Lock, NI
12	93–6022	1	Bracket–Brake
13	95–0907–03	1	Bracket–Brake, Skid
14	93–6019	1	Bracket
15	3296–29	4	Nut–Lock, NI
16	95–5715	1	Clutch Lever ASM
16:2	256–206	1	Bushing
17	88–7450	2	Spacer–Lever, Control
18	3256–23	2	Washer–Flat
19	3253–4	2	Washer–Lock
20	3210–7	2	Screw–HH
21	65–8971	1	Knob–Shift
22	93–6036	1	Cover–Console
24	93–6085	1	Decal–Throttle
25	105–5361	1	Decal–Console

Ref. No.	Part No.	Qty.	Description
26	323–34	2	Screw–HH
27	3253–21	2	Washer–Lock
28	3256–24	2	Washer–Flat
29	93–6000	2	Pin–Pivot, Handle
30	94–5868	2	Washer
31	3296–28	2	Nut–Lock, NI
32	65–8970	1	Knob–Shift
33	93–9044	1	Handle
34	3296–56	1	Nut–Lock, NI
35	3–5787	1	Spring–Compression
36	93–6016	1	Washer–Retaining
37	66–2921	2	Washer–Friction
38	94–5869	1	Throttle Cable ASM
39	322–9	4	Screw–HH
40	3290–378	2	Tie–Cable

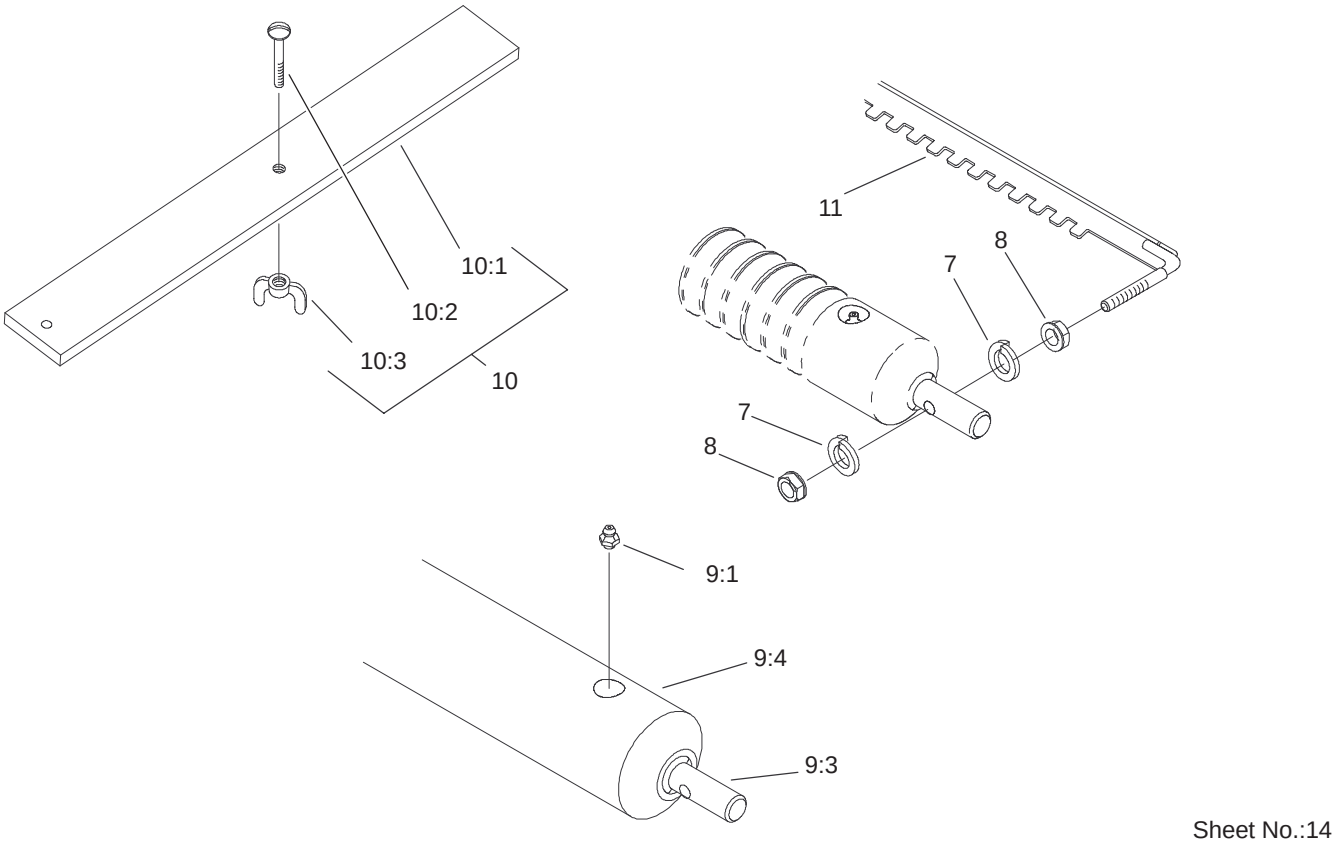

Sheet No.:14

Roller and HOC Bar Assembly

Ref. No.	Part No.	Qty.	Description
7	3254–8	4	Washer–Lock
8	3219–1	4	Nut–Hex
9	95–0930	1	Full Roller ASM
9:1	302–5	2	Fitting–Grease
9:3	52–3180	2	Bearing–Roller, Front
9:4	95–0918	1	Roller Tube ASM
10	94–9010	1	HOC Bar ASM
10:1	94–9011	1	Bar–HOC
10:2	32122–36	1	Screw
10:3	32103–2	1	Nut–Wing
11	94–9012–01	1	Scraper–Wiehle

Ref. No.	Part No.	Qty.	Description

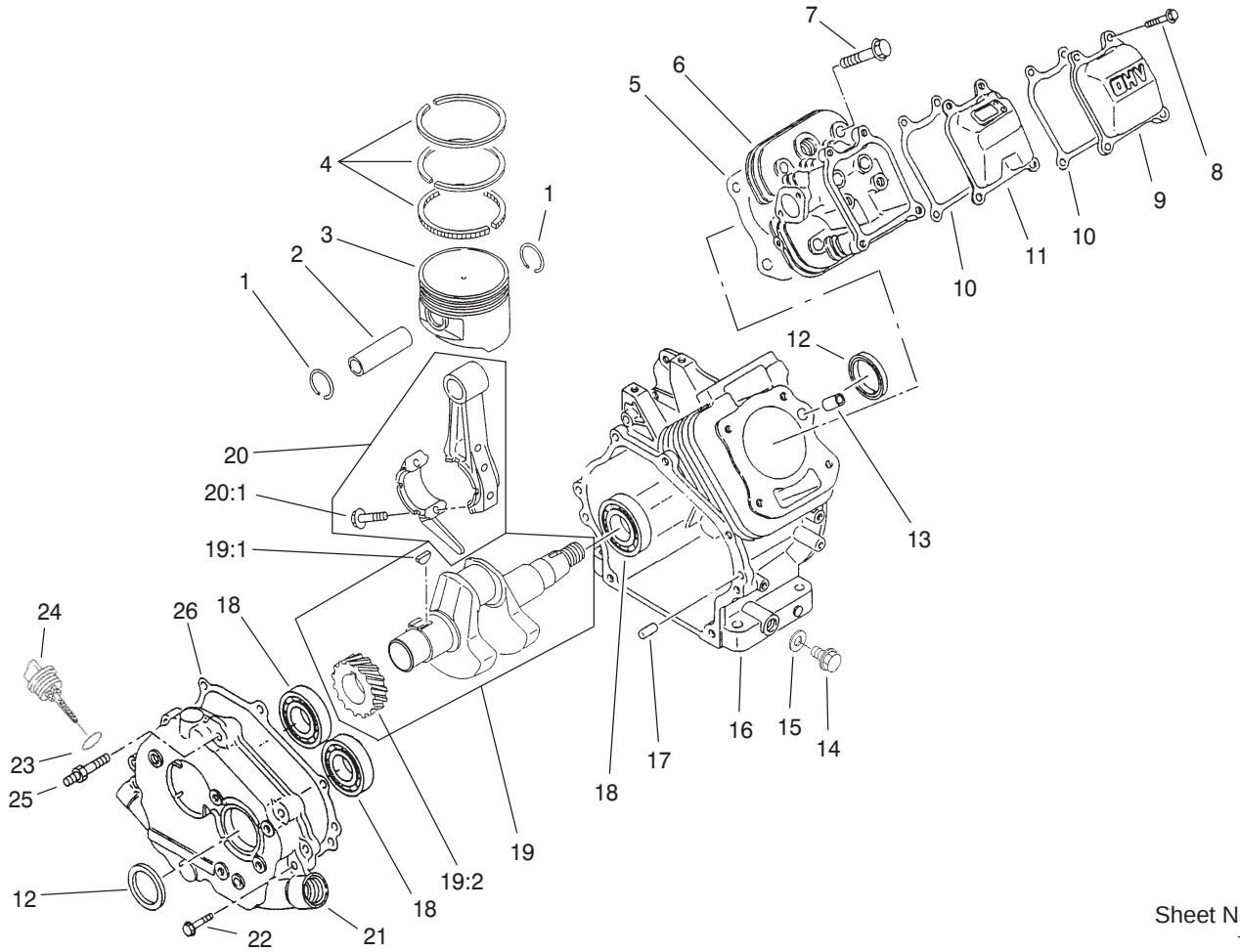

Sheet No.:50
T–3472

Crankcase Assembly

Ref. No.	Part No.	Qty.	Description
1	93–8500	2	Ring–Retaining
2	93–8501	1	Pin–Piston
3	93–8502	1	Piston
3	94–6836	1	Piston–0.5 O/S
4	93–8503	1	Set–Ring, Piston
4	94–6837	1	Set–Ring, Piston (.05mm)
5	93–8504	1	Gasket–Head
6	93–8505	1	Head–Cylinder
7	93–8506	4	Bolt–Flanged
8	94–6838	4	Bolt–Flanged
9	93–8508	1	Case–Rocker
10	93–8509	2	Gasket–Rocker
11	93–8510	1	Breather
12	93–8511	2	Seal–Oil
13	93–8512	2	Pin
14	93–8513	2	Plug–Drain
15	93–8514	2	Gasket–Plug, Drain
16	93–8515	1	Crankcase
17	93–8516	2	Pin
18	93–8517	2	Bearing–Ball
19	93–8518	1	Crankshaft ASM
19:1	93–8526	1	Key
19:2	94–9043	1	Gear–Helical
20	93–8528	1	Connecting Rod ASM
20:1	93–8527	2	Bolt–Rod

Ref. No.	Part No.	Qty.	Description
21	93–8520	1	Cover–Crankcase
22	93–8521	7	Bolt–Flanged
23	94–9041	2	O–Ring
24	93–8523	2	Cap–Filter, Oil
25	93–8524	1	Stud
26	93–8525	1	Gasket–Crankcase

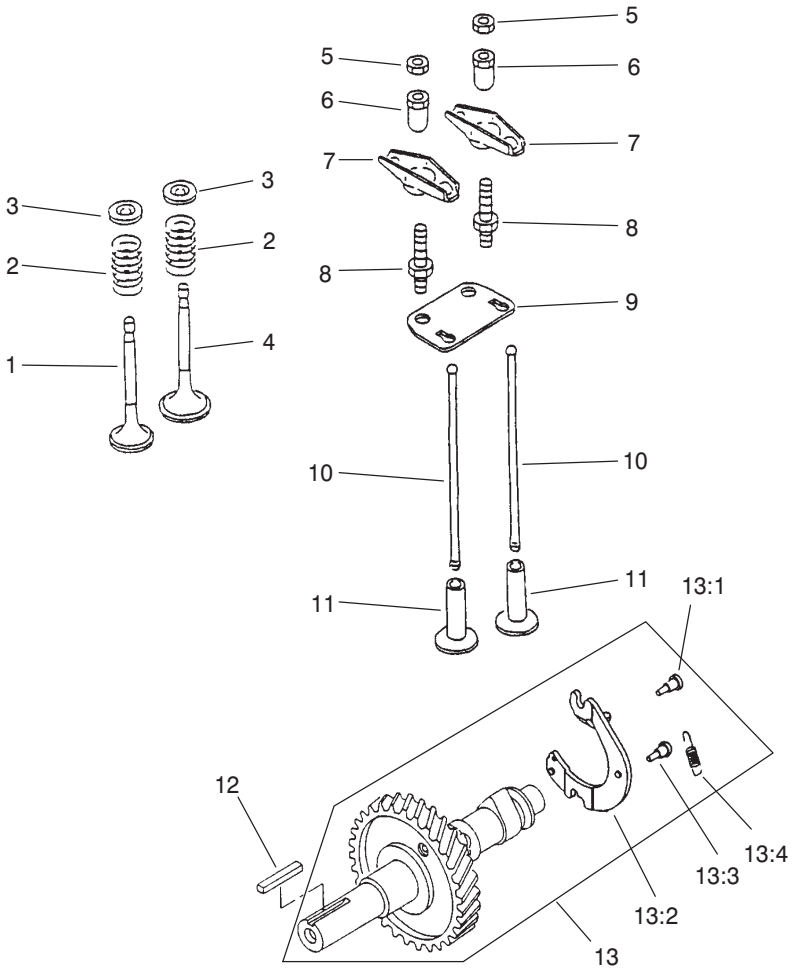

Sheet No.:51
T–3473

Camshaft and Valve Assembly

Ref. No.	Part No.	Qty.	Description
1	93–8529	1	Valve–Exhaust
2	93–8530	2	Spring–Valve
3	93–8531	2	Retainer–Spring
4	93–8532	1	Valve–Intake
5	93–8533	2	Nut
6	93–8534	2	Nut
7	93–8535	2	Arm–Rocker
8	93–8536	2	Bolt
9	93–8537	1	Guide
10	93–8538	2	Rod–Push
11	93–8539	2	Tappet
12	93–8545	1	Key
13	93–8544	1	Camshaft ASM
13:1	93–8540	1	Pin
13:2	93–8543	1	Decompressor
13:3	93–8542	1	Pin
13:4	93–8541	1	Spring

Ref. No.	Part No.	Qty.	Description

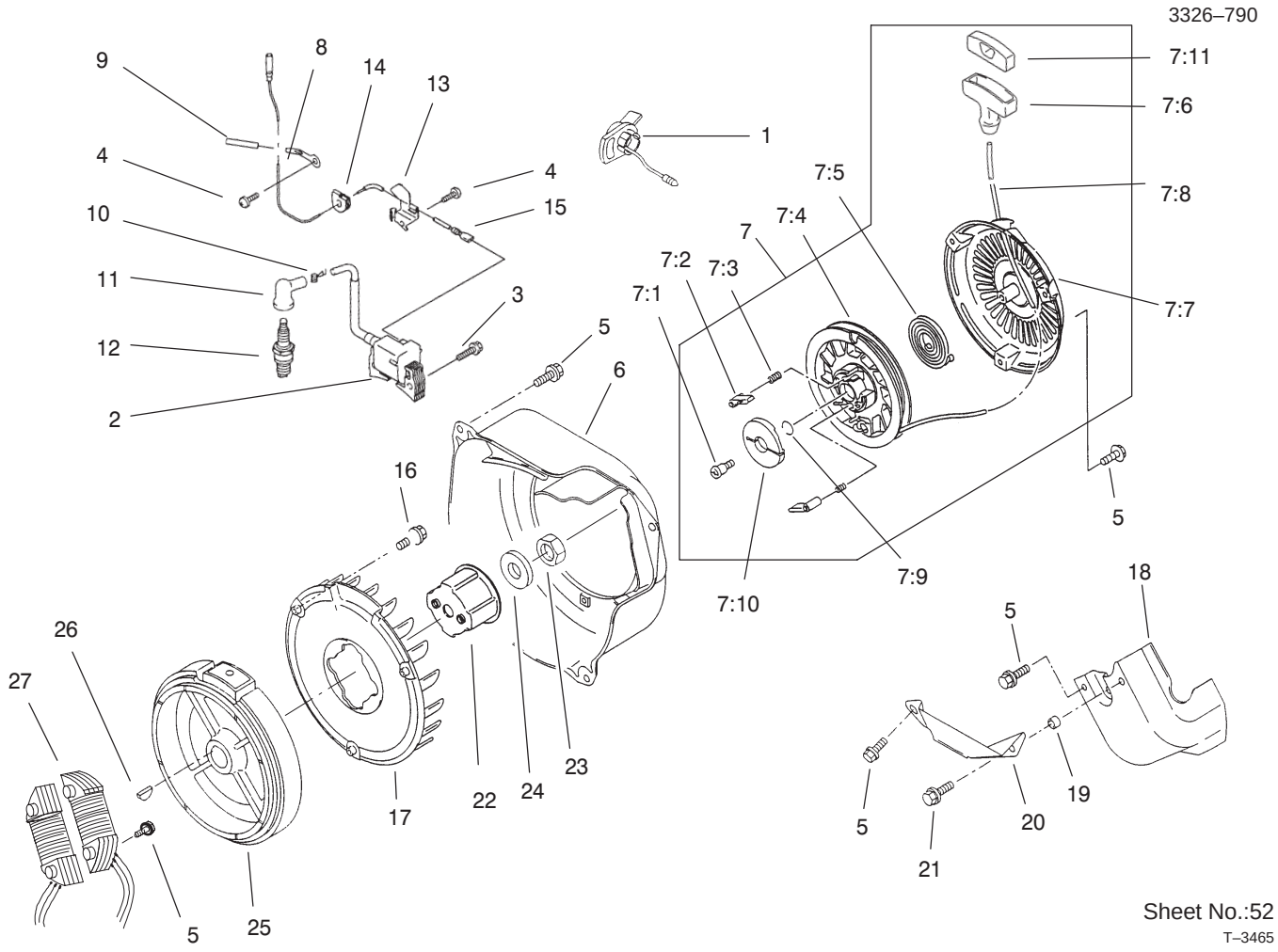

Ignition Assembly

Ref. No.	Part No.	Qty.	Description
1	93–8546	1	Switch
2	94–9031	1	Ignition Coil ASM
3	93–8548	6	Bolt–Flanged
4	93–8549	2	Screw
5	93–8550	10	Bolt–Flanged
6	94–9047	1	Housing–Fan
7	93–8552	1	Recoil Starter ASM
7:1	93–8553	1	Screw
7:2	93–8554	2	Pawl–Recoil
7:3	93–8555	2	Spring–Return
7:4	93–8556	1	Reel–Recoil
7:5	93–8557	1	Spring
7:6	94–9045	1	Grip–Starter, Recoil
7:7	94–9046	1	Case–Recoil
7:8	93–8560	1	Rope
7:9	93–8561	1	Ring–Retaining
7:10	93–8562	1	Guide–Pawl
7:11	94–9044	1	Cap–Grip
8	94–9039	1	Clamp
9	94–9040	1	Tube
10	94–9049	1	Spring–Terminal
11	93–8585	1	Cap–Plug, Spark
12	93–8584	1	Spark Plug
13	93–8583	1	Clamp
14	93–8582	1	Grommet
15	94–9038	1	Wire–Lead

Ref. No.	Part No.	Qty.	Description
16	94–6840	3	Bolt–Flanged
17	93–8572	1	Fan
18	93–8563	1	Shroud–Engine
19	93–8564	1	Collar
20	93–8565	1	Shroud–Engine
21	93–8566	1	Bolt–Flanged
22	93–8567	1	Pulley–Recoil
23	93–8568	1	Nut
24	93–8569	1	Washer
25	99–6237	1	Flywheel ASM
26	93–8571	1	Key
27	99–4267	1	Coil–Lighting

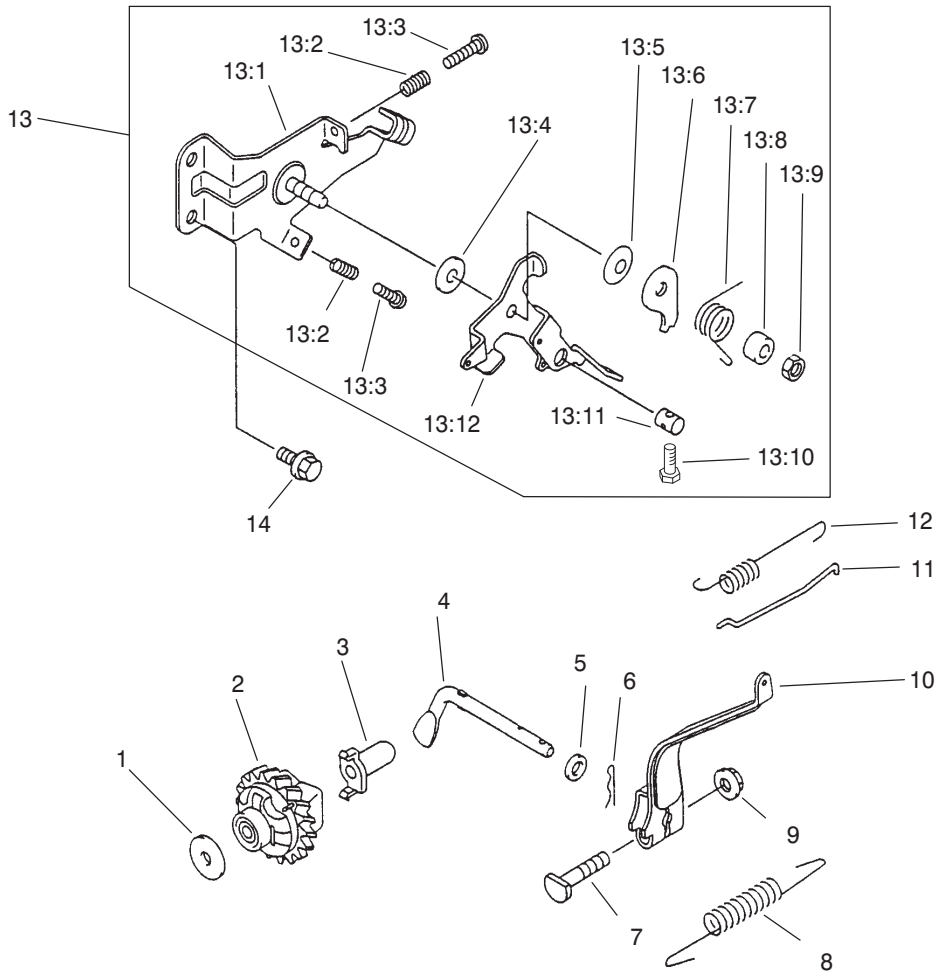

Sheet No.:53
T–3474

Governor Assembly

Ref. No.	Part No.	Qty.	Description
1	94–6842	1	Washer
2	94–6841	1	Governor ASM
3	93–8610	1	Sleeve
4	93–8609	1	Arm–Pivot
5	93–8608	1	Washer
6	93–8607	1	Pin–Snap
7	93–8606	1	Bolt
8	94–9030	1	Spring–Governor
9	93–8631	1	Nut
10	93–8603	1	Arm–Governor
11	93–8602	1	Rod–Governor
12	93–8601	1	Spring
13	93–8599	1	Control Panel ASM
13:1	93–8587	1	Panel–Control
13:2	93–8588	2	Spring
13:3	93–8589	2	Bolt
13:4	93–8590	1	Washer
13:5	93–8591	1	Spring
13:6	93–8592	1	Plate
13:7	93–8593	1	Spring
13:8	93–8594	1	Spacer
13:9	93–8595	1	Nut
13:10	93–8596	1	Screw–Head, Pan
13:11	93–8597	1	Nut
13:12	93–8598	1	Lever
14	93–8600	2	Bolt–Flanged

Ref. No.	Part No.	Qty.	Description

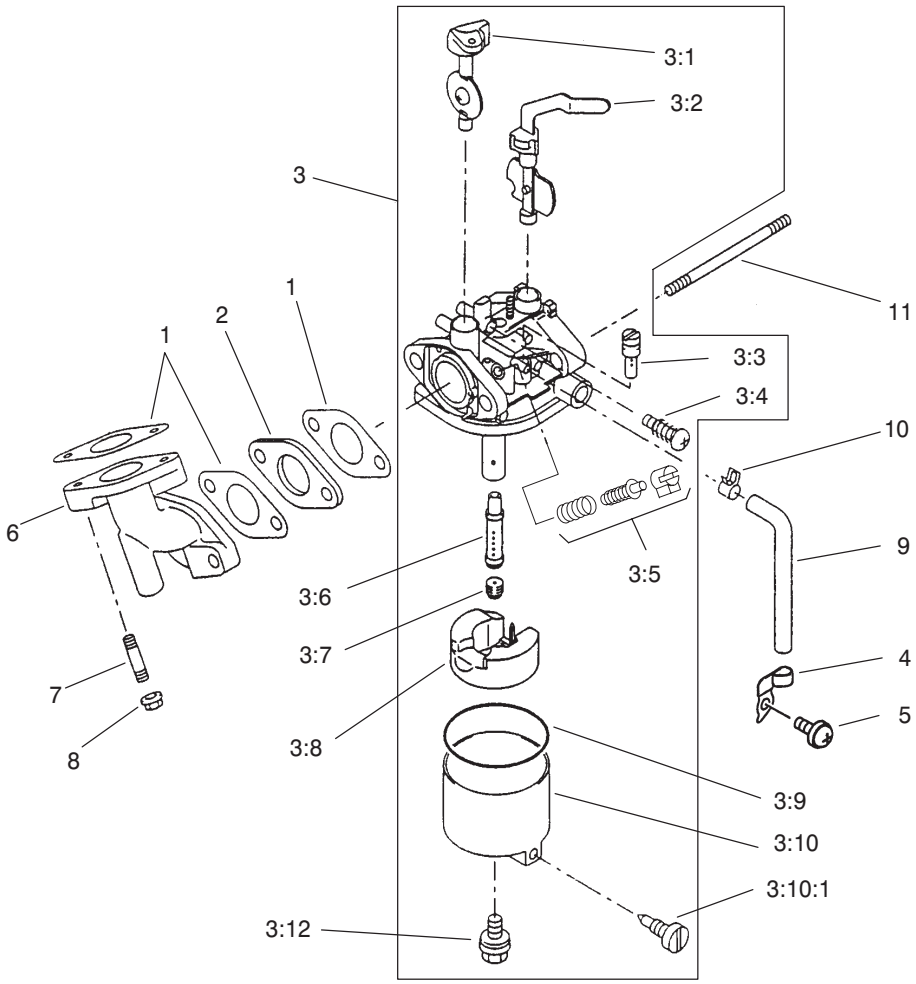

Sheet No.:54
T–3475

Carburetor Assembly

Ref. No.	Part No.	Qty.	Description
1	93–8613	3	Gasket
2	94–9048	1	Insulator
3	94–9032	1	Carburetor ASM
3:1	94–9033	1	Throttle Valve ASM
3:2	93–8617	1	Valve–Choke
3:3	94–9037	1	Jet–Pilot, #40
3:4	93–8619	1	Screw ASM
3:5	94–9034	1	Limiter
3:6	94–9035	1	Nozzle–Main
3:7	94–9036	1	Jet–Main, #65
3:7	98–8735	1	Jet–Main, #62 High Alt
3:7	98–8736	1	Jet–Main, #60 High Alt
3:8	94–6844	1	Float ASM
3:9	93–8624	1	Gasket
3:10	93–8625	1	Float Chamber ASM
3:10:1	93–8626	1	Screw ASM
3:12	93–8627	1	Bolt
4	94–6846	1	Clamp
5	94–6845	1	Screw
6	93–8633	1	Pipe–Intake
7	93–8632	2	Bolt–Stud
8	93–8631	2	Nut
9	93–8630	1	Tube
10	93–8629	1	Clamp
11	93–8628	2	Bolt–Stud

Ref. No.	Part No.	Qty.	Description

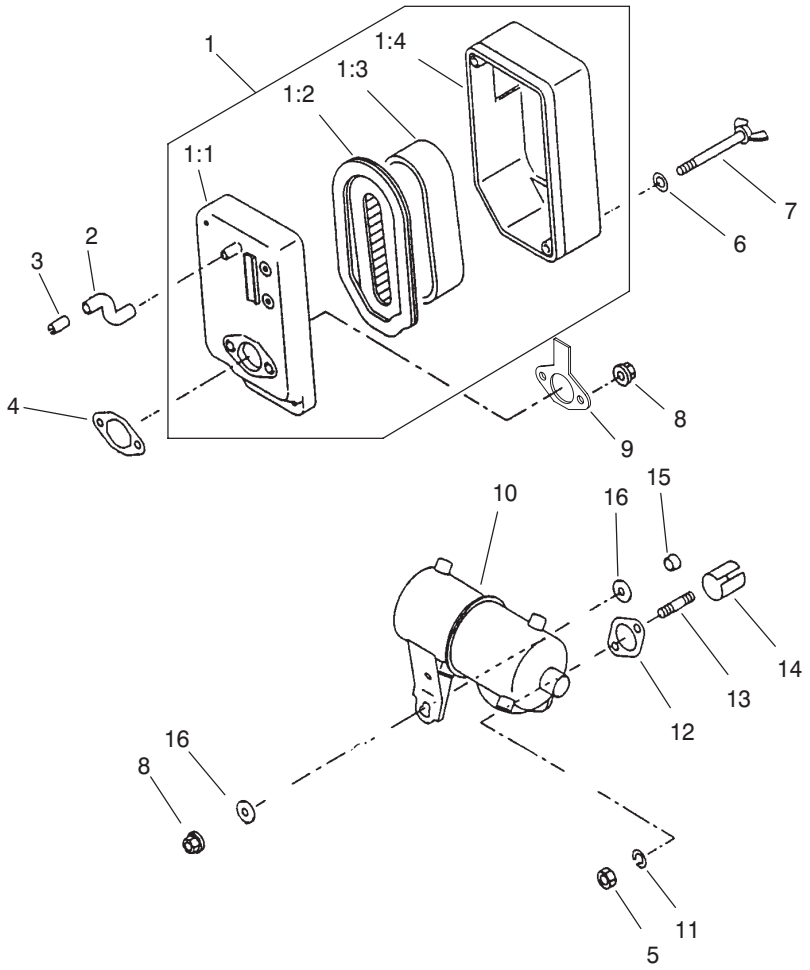

Sheet No.:55
T–3857

Air Cleaner and Muffler Assembly

Ref. No.	Part No.	Qty.	Description
1	93–8634	1	Air Filter ASM
1:1	93–8635	1	Case Filter ASM
1:2	93–8636	1	Element–Filter, Air
1:3	93–8637	1	Element–Filter, Air
1:4	93–8638	1	Cap–Filter, Air
2	93–8659	1	Tube
3	93–8658	1	Pipe
4	93–8657	1	Gasket–Filter, Air
5	93–8656	2	Nut–Hex
6	93–8639	2	Washer
7	93–8640	2	Bolt
8	93–8631	3	Nut
9	93–8642	1	Plate–Filter, Air
10	98–3427	1	Muffler
11	93–8655	2	Washer–Spring
12	93–8654	1	Gasket–Muffler
13	94–6848	2	Bolt–Stud
14	93–8652	1	Pipe–Exhaust
15	93–8651	1	Collar
16	93–8650	2	Washer

Ref. No.	Part No.	Qty.	Description

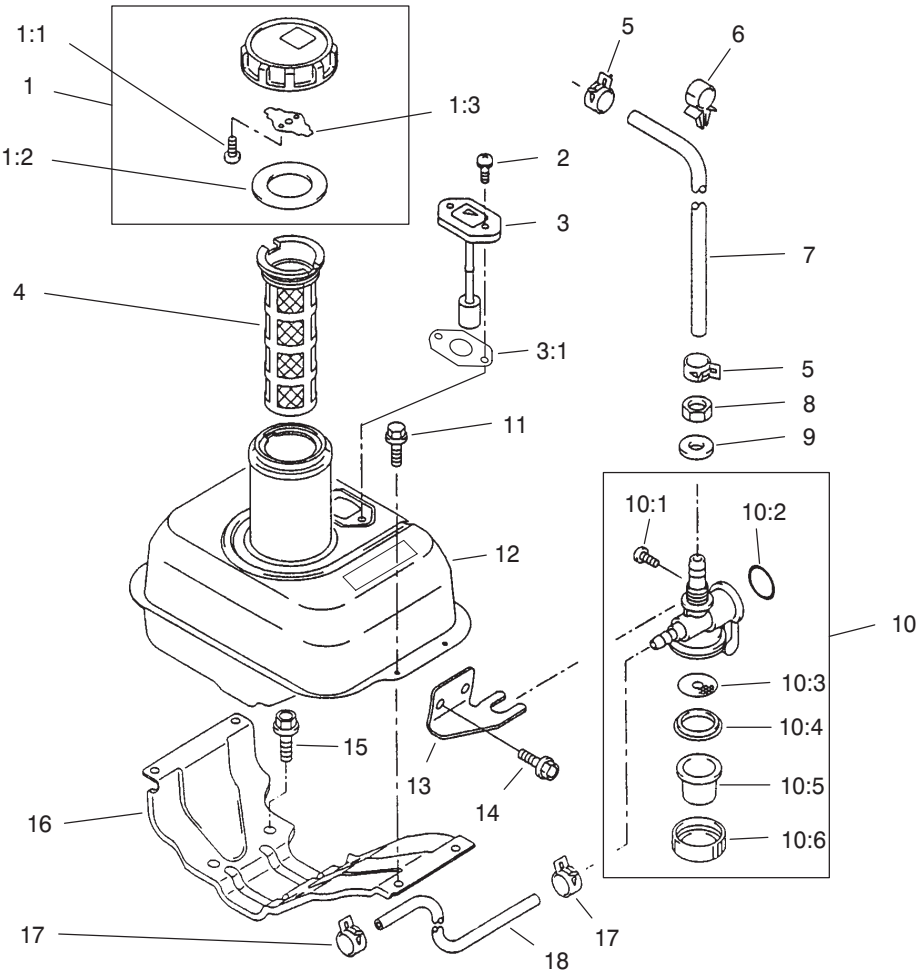

Sheet No.:56
T–3477

Fuel Tank Assembly

Ref. No.	Part No.	Qty.	Description
1	93–8660	1	Fuel Cap ASM
1:1	93–8661	2	Screw
1:2	93–8662	1	Gasket
1:3	93–8663	1	Spring
2	93–8686	2	Screw
3	93–8685	1	Gauge–Fuel
3:1	104–2384	1	Gasket–Gauge, Fuel
4	94–6826	1	Filter–Fuel
5	93–8664	2	Clamp
6	93–8665	1	Clamp
7	93–8666	1	Tube
8	94–9042	1	Nut
9	93–8668	1	Washer
10	93–8669	1	TAP ASM
10:1	93–8670	1	Screw
10:2	93–8671	1	O–Ring
10:3	94–6849	1	Filter–TAP
10:4	93–8673	1	Gasket
10:5	93–8674	1	Cup–TAP
10:6	93–8675	1	Nut
11	93–8683	4	Bolt
12	104–2382	1	Tank–Fuel
13	93–8681	1	Bracket
14	93–8680	2	Bolt–Flanged
15	94–6825	4	Bolt–Flanged
16	104–2383	1	Bracket–Tank

Ref. No.	Part No.	Qty.	Description
17	93–8676	2	Clamp
18	93–8677	1	Tube

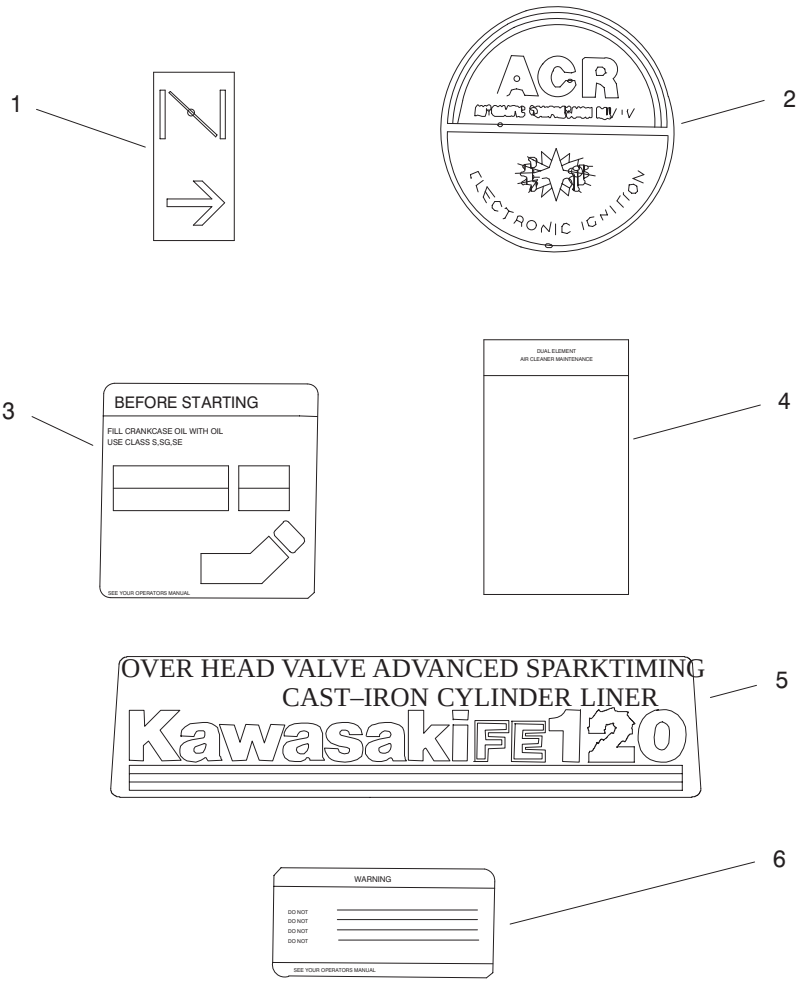

Sheet No.:57
T–3478

Decals

Ref. No.	Part No.	Qty.	Description
1	93–8687	1	Decal–Choke
2	94–9027	1	Label–Recoil
3	93–8689	1	Decal–Instructions
4	93–8690	1	Decal–Maintenance
5	94–9028	1	Label–Kawasaki
6	93–8692	1	Decal–Warning

Ref. No.	Part No.	Qty.	Description

Special Tools

Bedknife Screw Tool No. *TOR510880

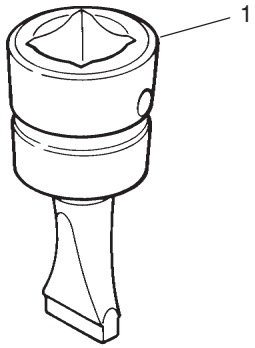

T–0729

Ref. No.	Part No.	Description	No. Used
1		Tool–Bedknife, Screw	1

Backlapping Bruch Assembly No. *TOR299100

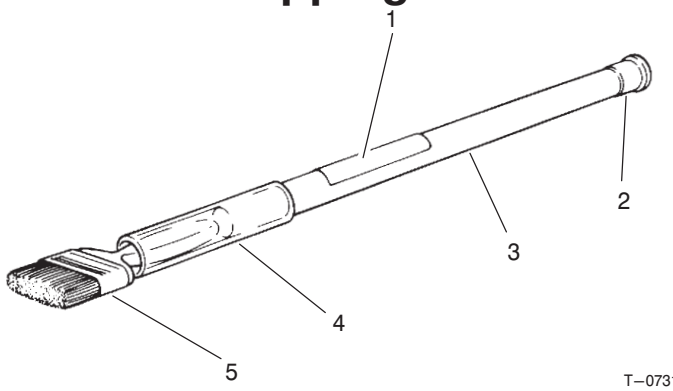

T–0731

Ref. No.	Part No.	Description	No. Used
1	12–9140	Decal	1
2	2410–18	Plug	1
3	29–9080	Handle	1
4	29–9090	Hose–Handle	1
5	36–4310	Brush	1

*Obtain these items directly from OTC 2013 4th St. Owatonna, MN. 55060 1–800–533–0492 (in Minnesota and Canada 1–507–455–7050) Fax. 507–455–7011.

Maintenance Record

Date								

Maintenance Record

Date								


TORO®