Form No. 3326-793

TimeCutter™ Z Riding Mowers

Model No. 74501—Serial No. 220000001 and Up
Model No. 74601—Serial No. 220000001 and Up
Model No. 74701—Serial No. 220000001 and Up
Model No. 74801—Serial No. 220000001 and Up

Setup Instructions

Loose Parts

Note: Use the chart below to verify that all parts have been shipped.

Description	Qty.	Use
Bolt, 1/4 x 3/4 in. Washer, 1/4 in. Nut, 1/4 in.	2 2 2	Installing the battery
Seat Knob Flat washer, 5/16 in.	1 2 2	Installing the seat
Left-hand control lever Right-hand control lever Bolt, 3/8 x 1 in. Curved washer, 3/8 in.	1 1 4 4	Installing the motion control levers
Hose coupling	1	Washing the underside of the mower
Key	1	
Operator's Manual Engine Operator's Manual	1 1	Read before operating the machine.
Registration card	1	Fill out and return to Toro.

© 2001 by The Toro Company
8111 Lyndale Avenue South
Bloomington, MN 55420-1196

All Rights Reserved
Printed in the USA

Activating the Battery

Bulk electrolyte with 1.260 specific gravity must be purchased from a local battery supply outlet.

Danger

Battery electrolyte contains sulfuric acid which is a deadly poison and causes severe burns.

- **Do not drink electrolyte and avoid contact with skin, eyes or clothing. Wear safety glasses to shield your eyes and robber gloves to protect your hands.**
- **Fill the battery where clean water is always available for flushing the skin.**
- **Follow all instructions and comply with all safety messages on the electrolyte container.**

1. Remove the battery from the machine and place it on a level surface; refer to the Operator's Manual, Removing the Battery.

Important Never fill the battery with electrolyte while the battery is installed in the tractor. Electrolyte could be spilled on other parts and cause corrosion.

2. Clean the top of the battery with a paper towel.
3. Remove the vent caps from the battery (Fig. 1). Slowly pour electrolyte into each battery cell until the electrolyte level is up to the Upper line on the battery case (Fig. 1).

Important Do not overfill the battery because electrolyte (sulfuric acid) can cause severe corrosion and damage to the chassis.

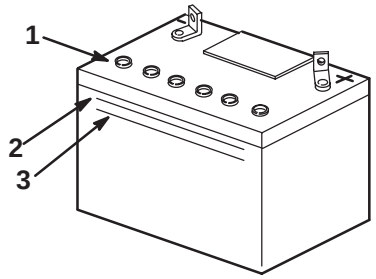

Figure 1

1. Vent caps
2. Upper line
3. Lower line

4. Wait five to ten minutes after filling the battery cells. Add electrolyte, if necessary, until the electrolyte level is up to the Upper line (Fig. 1) on the battery case.
5. Reinstall the battery vent caps.
6. Charge the battery for 10 to 15 minutes at 25 to 30 amps or 30 minutes at 4–6 amps (Fig. 2). Do not overcharge the battery.

Warning

Charging the battery produces gasses that can explode.

Never smoke near the battery and keep sparks and flames away from battery.

7. When the battery is fully charged, unplug the charger from the electrical outlet, then disconnect the charger leads from the battery posts (Fig. 2).
8. Install the battery in the tractor and connect the battery cables; refer to the Operator's Manual, Installing the Battery.

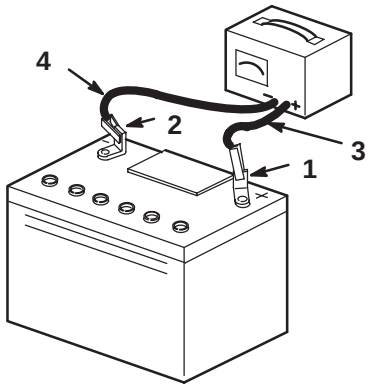

Figure 2

1. Positive post
2. Negative post
3. Charger red (+) wire
4. Charger black (–) wire

Installing the Motion Control Levers

1. Remove the 4 bolts (3/8 x 1 in.) and 4 curved washers (3/8 in.) which attach the motion control levers to the control arm shafts for shipping (Fig. 3).
2. Place the levers (with the mounting plates toward the rear of the machine) on the outside of the control arm shaft and loosely secure them with the 4 bolts and curved washers removed in step 1 (Fig. 3).

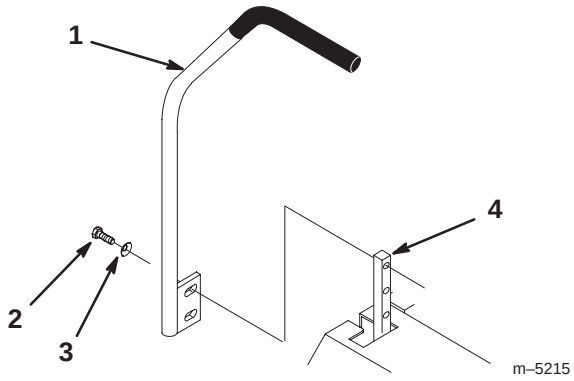

Figure 3

1. Control arm
2. Bolt, 3/8 x 1 in.
3. Curved washer, 3/8 in.
4. Control arm shaft

3. Position the levers so that the bolts are in the center of the slots on the lever mounting plate and tighten the bolts until they are snug.

4. Align the front/rear position of the levers with each other while in the neutral position. Loosen the bolts and adjust the levers by sliding and/or tilting the lever(s) forward or backward until they are properly aligned.

5. If the ends of the motion control levers hit against each other while they are in the drive position (Fig. 4) (the levers are rotated in as far as possible), make adjustments by moving the levers outward to the neutral lock position and carefully bend them outward. Move them back to the drive position and check for clearance. Repeat if necessary.

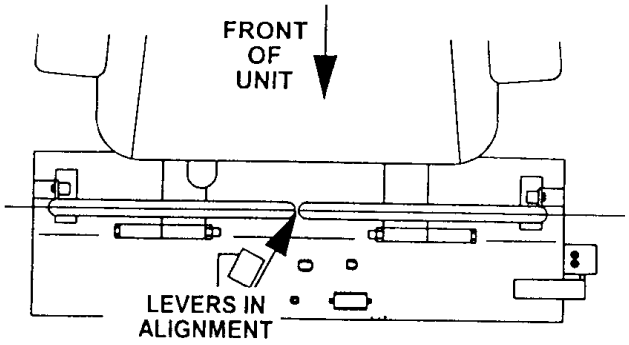

Figure 4

Installing the Seat

1. Cut the plastic ties securing the seat to the machine for shipping. Remove the seat.

2. Remove the knobs and flat washers (5/16 in.) from the bottom of the seat.

3. Raise the seat support on the machine (Fig. 5).

4. Slide the shoulder bolts on the bottom of the seat into the slots on the seat support (Fig. 5). Secure the seat to the seat support with the flat washers and knobs removed in step 2 (Fig. 5).

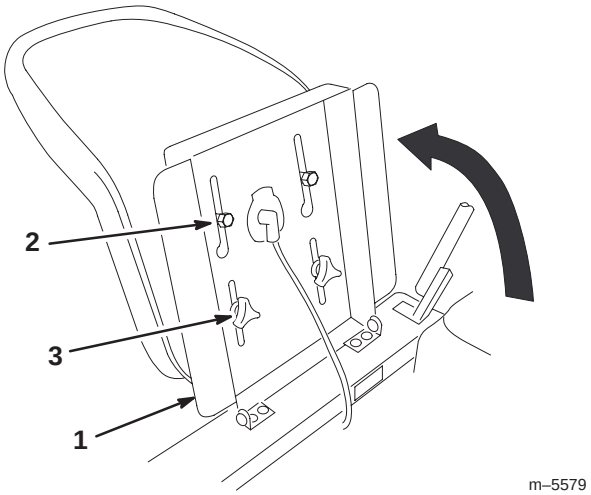

Figure 5

1. Seat support
2. Shoulder bolt
3. Knob

5. Lower the seat and adjust it if necessary; refer to Positioning the Seat in the Operator's Manual.

Checking the Mower Adjustment

The mower deck was leveled at the factory. If the mower is not cutting level, adjust the side-to-side level and the front-to-rear blade slope. See the Operator's Manual for the proper procedure.

Checking the Side Discharge Chute

Remove the plastic tie holding the side discharge chute up, and lower the chute into place.

Checking the Engine Oil Level

Before you start the engine and use the machine, check the oil level in the engine crankcase; refer to Checking the Oil Level in the Operator's Manual.

Checking the Tire Pressure

Check the front and rear tires for proper inflation. Refer to Tire Pressure in the Operator's Manual for the recommended inflation pressure.


TORO®