Form No. 3326-829

TORO®

Recycler®

Walk Power Lawn Mower

Model No. 20652–200000001 and Up

Operator's Manual

CE

International English (GB)

This spark ignition system complies with Canadian ICES-002.

Ce système d'allumage par étincelle de véhicule est conforme à la norme NMB-002 du Canada.

The enclosed Engine Owner's Manual is supplied for information regarding The U.S. Environmental Protection Agency (EPA) and the California Emission Control Regulation of emission systems, maintenance and warranty.

Keep this engine Owner's Manual with your unit. Should this engine Owner's Manual become damaged or illegible, replace immediately. Replacements may be ordered through the engine manufacturer.

Contents

	Page
Introduction	2
Safety	3
General Lawn Mower Safety	3
Sound Pressure Level	5
Sound Power Level	5
Vibration Level	5
Safety and Instruction Decals	5
Assembly	7
Unpacking the Lawn Mower	7
Installing the Handle	7
Before Starting	8
Filling the Crankcase with Oil	8
Filling the Fuel Tank with Gasoline	8
Operation	9
Controls	9
Starting the Engine	10
Stopping the Engine	10
Using the Self-propel Drive	10
Adjusting the Cutting Height	10
Using the Discharge Tunnel Plug	11
Operating Tips	11
Adjusting the Handle Height	12
Maintenance	13
Recommended Maintenance Schedule	13
Checking the Engine Oil Level	14
Changing the Engine Oil	14
Cleaning the Underside of the Lawn Mower Housing	15
Servicing the Air Filter	16
Maintaining the Blade	17
Adjusting the Self-propel Drive Cable	18
Lubricating the Self-propel Drive	19
Cleaning Under the Belt Cover	19
Maintaining the Spark Plug	19
Emptying the Fuel Tank	20
Storage	20
Preparing the Fuel System	20
Preparing the Engine	20
General Information	20
Folding the Handle	21
Removing From Storage	21
Accessories	22
Installing the Rear Grass Catcher	22
Emptying the Grass Bag	23
Installing the Side Discharge Chute	23
Removing the Side Discharge Chute	23
Troubleshooting	24

Introduction

Thank you for choosing a Toro product. We want you to be completely satisfied with your new purchase.

Read this manual carefully to learn how to operate and maintain your product properly. The information in this manual can help you and others avoid injury and product damage. Although Toro designs and produces safe products, you are responsible for operating the product properly and safely.

Whenever you contact your Authorized Service Dealer or the factory for help with service, genuine Toro parts, or additional information, have the model number and the serial number of your product handy. You will find the model number and serial number decal on the product as illustrated in Figure 1.

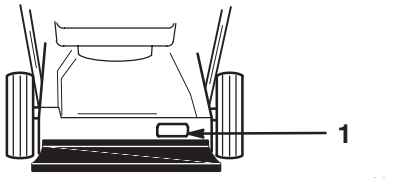

Figure 1

1. Model number and serial number decal

Write the product model number and serial number in the space below:

Model No. _____

Serial No. _____

©2001 by The Toro Company
All Rights Reserved

Printed in USA

This manual identifies potential hazards and has special safety messages that help you and others avoid personal injury and even death. DANGER, WARNING, and CAUTION are words used to identify the level of hazard.

DANGER signals an extreme hazard that will cause serious injury or death if you do not follow the recommended precautions.

WARNING signals a hazard that may cause serious injury or death if you do not follow the recommended precautions.

CAUTION signals a hazard that may cause minor or moderate injury if you do not follow the recommended precautions.

This manual uses two other words to highlight information. **Important** calls attention to special mechanical information and **Note** emphasizes general information worthy of special attention.

Safety

Toro designed this lawn mower for cutting and mulching grass, or, when equipped with a grass bag, for catching cut grass. Any use for purposes other than these could prove dangerous to the operator or to bystanders.

WARNING

POTENTIAL HAZARD
- **Engine exhaust contains carbon monoxide, which is an odorless, deadly poison.**

WHAT CAN HAPPEN
- **Carbon monoxide can kill you.**

HOW TO AVOID THE HAZARD
- **Do not run the engine indoors or in an enclosed area.**

To ensure maximum safety, best performance, and to gain knowledge of the product, it is essential that you and any other operator of the lawn mower read and understand the contents of this manual before the motor is ever started. Pay particular attention to the safety alert symbol ⚠ which means CAUTION, WARNING, OR DANGER — "personal safety instruction." Read and understand the instruction because it has to do with safety. Failure to comply with instruction may result in personal injury.

General Lawn Mower Safety

The following instructions have been adapted from the ANSI/OPEI standard B71.1—1998 and ISO standard 5395:1990(E). Information or terminology specific to Toro lawn mowers is enclosed in parenthesis.

This cutting machine is capable of amputating hands and feet and throwing objects. Failure to observe the following safety instructions could result in serious injury or death.

Training

- Read the instructions carefully. Be familiar with the controls and the proper use of the equipment before starting.
- See manufacturer's instructions for proper operation and installation of accessories. Only use accessories approved by the manufacturer.
- Never allow children or people unfamiliar with these instructions to use the mower. Local regulations may restrict the age of the operator.
- Never mow while people, especially children, or pets are nearby. Stop mower if anyone enters the area.

Tragic accidents can occur if the operator is not alert to the presence of children. Children are often attracted to the mower and the mowing activity. **Never** assume that children will remain where you last saw them.

- Keep children out of the mowing area and under the watchful care of a responsible adult.
- Be alert and turn mower off if children enter the area.
- Use extra care when approaching blind corners, shrubs, trees, or other objects that may obscure vision.
- Keep in mind that the operator or user is responsible for accidents or hazards occurring to other people or their property.

Preparation

- While mowing, always wear substantial footwear and long trousers.
- Do not operate the equipment when barefoot or wearing open sandals.
- Always wear safety goggles or safety glasses with side shields when operating mower.
- Thoroughly inspect the area where the equipment is to be used and remove all stones, sticks, wires, bones, and other foreign objects.
- **Warning: Gasoline is highly flammable.** Take the following precautions:
  - Store fuel in containers specifically designed for this purpose.
  - Refuel outdoors only and do not smoke while refuelling.
  - Add fuel before starting the engine. Never remove the cap of the fuel tank or add gasoline while the engine is running or when the engine is hot.

  - If gasoline is spilled, do not attempt to start the engine but move the machine away from the area of spillage and avoid creating any source of ignition until gasoline vapors have dissipated.
  - Replace all fuel tank and container caps securely.
  - If the fuel tank has to be drained, do this outdoors.
- Replace faulty mufflers.
- Before using, always visually inspect to see that the blades, blade bolts, and cutter assembly are not worn or damaged. Replace worn or damaged blades and bolts in sets to preserve balance.
- On multibladed machines, take care as rotating one blade can cause other blades to rotate.

Operation

- Do not operate the engine in a confined space where dangerous carbon monoxide fumes can collect.
- Mow only in daylight or in good artificial light.
- Always be sure of your footing on slopes.
- Walk; never run.
- Keep a firm hold on the handle.
- For wheeled rotary machines, mow across the face of slopes, never up and down.
- Exercise extreme caution when changing direction on slopes.
- Do not mow excessively steep slopes.
- Use extreme caution when reversing or pulling the mower toward you.
- Before and while moving backward, look behind and down for small children.
- Stop the blade(s) if the mower has to be tilted for transportation when crossing surfaces other than grass and when transporting the mower to and from the area to be mowed.
- Never operate the mower with damaged or missing guards or shields, or without safety devices; for example, deflectors and/or grass catchers in place.
- Do not change the engine governor settings or overspeed the engine.
- Disengage all blade and drive clutches before starting the engine.
- Start the engine or switch on the motor carefully according to instructions and with feet well away from the blade(s).
- Do not tilt when starting the engine or switching on the motor, unless the mower has to be tilted for starting. In this case, do not tilt it more than absolutely necessary and lift only the part which is away from the operator.
- Do not start the engine when standing in front of the discharge chute.
- Do not put hands or feet near or under rotating parts. Keep clear of the discharge opening at all times.
- Never pick up or carry a mower while the engine is running.
- Stop the engine and disconnect the spark plug lead
  - before clearing blockages or unclogging chute;
  - before checking, cleaning, or working on the mower;
  - after striking a foreign object. Inspect the mower for damage and make repairs before restarting and operating the mower;
  - if mower starts to vibrate abnormally (check immediately).
- Stop the engine
  - whenever you leave the mower;
  - before refuelling.
- Reduce the throttle setting during engine run-out and, if the engine is provided with a shut-off valve, turn the fuel off at the conclusion of mowing.
- Stop the blade(s) when crossing gravel drives, walks, or roads.
- Shut the engine off and wait until the blade comes to complete stop before removing grass catcher.
- Do not operate the mower while under the influence of alcohol or drugs.
- If the equipment should start to vibrate abnormally, stop the engine and check immediately for the cause. Vibration is generally a warning of trouble.

Slopes are a major factor related to slip and fall accidents which can result in a severe injury. If you feel uneasy on a slope, do not mow it.

- Watch for holes, ruts, or bumps. Tall grass can hide obstacles.
- **Do not** mow near drop-offs, ditches, or embankments. The operator could lose footing or balance.
- **Do not** mow on wet grass. Reduced footing could cause slipping.

Maintenance and Storage

- Keep all nuts, bolts (especially blade attachment bolts), and screws tight to be sure the equipment is in safe working condition.
- Never store the equipment with gasoline in the tank inside a building where fumes may reach an open flame or spark.
- Allow the engine to cool before storing in any enclosure.
- To reduce the fire hazard, keep the engine, muffler, battery compartment, and gasoline storage area free of grass, leaves, or excessive grease.
- Check the grass catcher frequently for wear or deterioration.
- Replace worn or damaged parts for safety.
- Use extra care when handling gasoline; vapors are explosive.
- Never tamper with safety devices. Check their proper operation regularly.
- Keep the mower free of grass, leaves, or other debris build-up. Clean up oil or fuel spillage.
- Stop and inspect the equipment if you strike an object. Repair, if necessary, before restarting.
- Never attempt to make wheel height adjustments while the engine is running.
- Always disconnect electric mowers (live operated) before cleaning, repairing, or adjusting.
- Grass catcher components are subject to wear, damage, and deterioration, which could expose moving parts or allow objects to be thrown. Frequently check components and replace with manufacturer's recommended parts when necessary.
- Mower blades are sharp and can cut. Wrap the blade(s) or wear gloves, and use extra caution when servicing them.
- Do not change the engine governor setting or overspeed the engine.
- To ensure the best performance and safety, purchase only genuine Toro replacement parts and accessories. **Do not use "will fit" parts and accessories; they may cause a safety hazard.**

Sound Pressure Level

This unit has a sound pressure at the operator's ear of 86 dB(A), based on measurements of identical machines per Directive 84/538/EEC.

Sound Power Level

This unit has a sound power level of 100 LwA, based on measurements of identical machines per Directive 84/538/EEC.

Vibration Level

This unit has a maximum hand-arm vibration level of 7.3 m/s^2, based on measurements of identical machines per EN 1033.

Safety and Instruction Decals

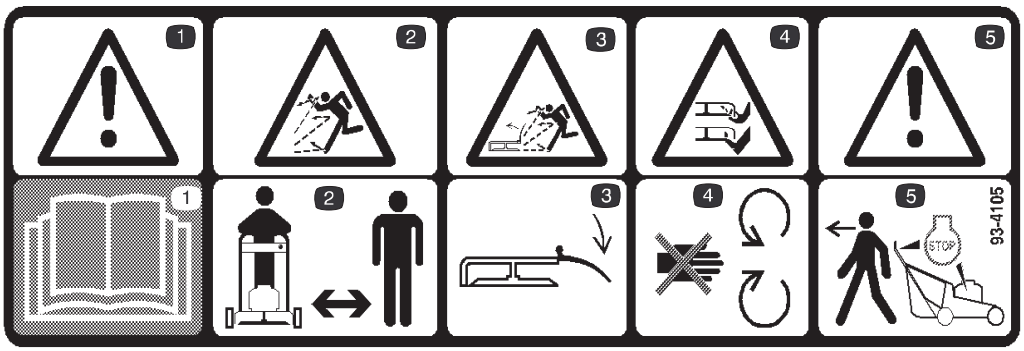

93-4105

1. Danger—read and understand the operator's manual
2. Thrown object hazard—keep bystanders away
3. Thrown object hazard from the lawn mower—keep the deflector in place
4. Cutting/dismemberment hazard of hands or feet—stay away from rotating blades and moving parts
5. Warning—stop the engine when leaving the lawn mower

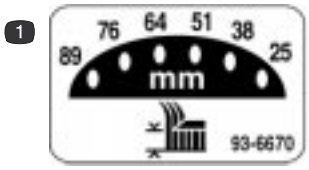

93-6670

1. Cutting height adjustment (left wheel)

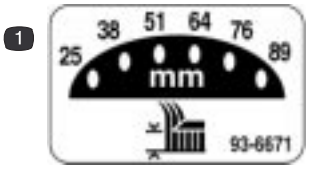

93-6671

1. Cutting height adjustment (right wheel)

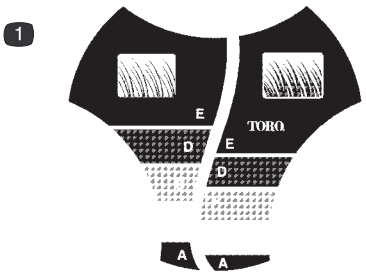

100-1519

1. *Smart Wheel* ™ cutting height scale



105-2699

1. Sound power level decal

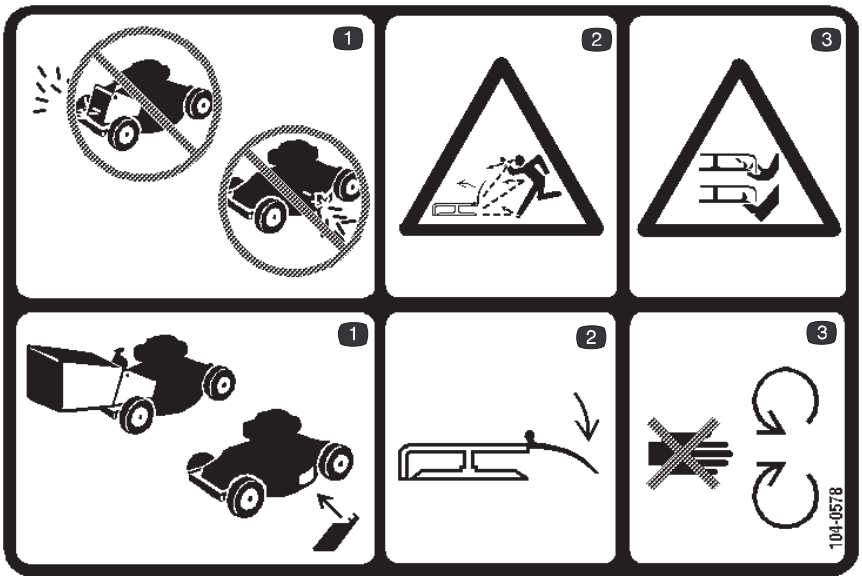

104-0578

1. Do not operate the lawn mower without the bag, side discharge chute, or side cover in place; always install the bag, side discharge chute, or side cover before using the lawn mower
2. Thrown object hazard from the lawn mower—keep the deflector in place
3. Cutting/dismemberment hazard of hands or feet—stay away from rotating blades and moving parts

Assembly

Note: Determine the left and right sides of the lawn mower by standing in the operating position.

Unpacking the Lawn Mower

WARNING

POTENTIAL HAZARD
- **Folding or unfolding the handle improperly can pinch, stretch, or damage one or more of the cables.**

WHAT CAN HAPPEN
- **Any pinched, stretched, or damaged cable may cause an operational failure that results in an unsafe operating condition.**

HOW TO AVOID THE HAZARD
- **Do not pinch, stretch, or damage the cables.**
- **Handle the cables with care when folding or unfolding the handle.**
- **Do not use the lawn mower if one or more of the cables are pinched, stretched, or damaged. Contact your Authorized Service Dealer.**

1. Open the box from the top.
2. Remove the lower handle section from the box.
3. Remove the fillers from the box, allowing the upper handle section to rest on the top of the lawn mower.
4. Remove the lawn mower from the box.
5. Lay the upper handle section on the ground behind the lawn mower with the handle label facing up and the control cables routed between the handle mounting brackets (Fig. 2).

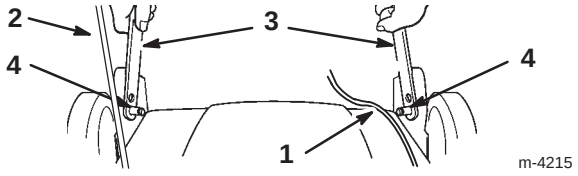

Figure 2

1. Cable
2. Starter rope
3. Lower handle section
4. Handle mounting bracket pins

Installing the Handle

1. Squeeze the lower handle section ends together, position the holes in the handles over the pins on the handle brackets, and release the handle (Fig. 2).

IMPORTANT: Route the cables inside the lower handle section and the starter rope outside the handle.

2. Remove the four handle bolts and knobs installed on the lower handle section.

   Note: Two bolts have flat caps and two have contoured caps to fit the handle.

3. Swing the lower handle section back and the support brackets up, aligning the brackets with the holes in the handle (Fig. 3).

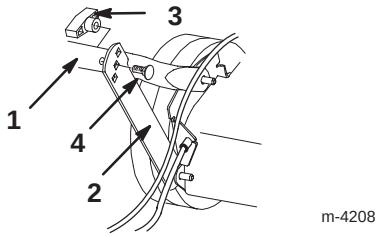

Figure 3

1. Lower handle
2. Support bracket
3. Knob
4. Flat handle bolt

4. Secure the handle to the support brackets with the two flat handle bolts and two knobs, using the height adjustment holes on the brackets that best fit your height (Fig. 3).

WARNING

POTENTIAL HAZARD
- **Folding or unfolding the handle improperly can pinch, stretch, or damage one or more of the cables.**

WHAT CAN HAPPEN
- **Any pinched, stretched, or damaged cable may cause an operational failure that results in an unsafe operating condition.**

HOW TO AVOID THE HAZARD
- **Do not pinch, stretch, or damage the cables.**
- **Handle the cables with care when folding or unfolding the handle.**
- **Do not use the lawn mower if one or more of the cables are pinched, stretched, or damaged. Contact your Authorized Service Dealer.**

5. Slide the upper handle section ends over the lower handle section so that the sections nest together (Fig. 4)

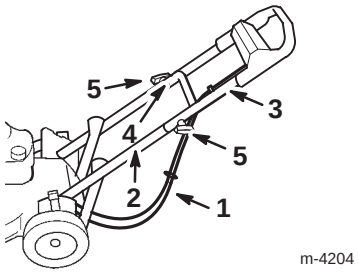

Figure 4

1. Cables
2. Lower handle
3. Upper handle
4. Contoured handle bolt (only one shown)
5. Knobs

6. Ensure that the cables are routed below and behind the lower handle section as illustrated in Figure 4.

7. Secure the upper handle section to the lower handle section using two contoured handle bolts and two knobs (Fig. 4).

Before Starting

Filling the Crankcase with Oil

The crankcase can hold 20 ounces (0.59 liters) of oil. Use only high-quality, SAE 30 or 10W30 weight detergent oil that has the American Petroleum Institute (API) "service classification" — SF, SG, SH, or SJ.

Before each use, make sure that the oil level is between the *Add* and the *Full* marks on the dipstick (Fig. 5).

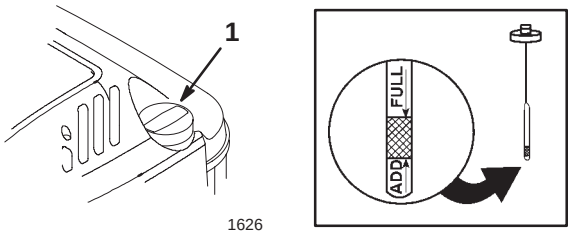

Figure 5

1. Dipstick

To add oil:

1. Move the lawn mower to a level surface.

2. Clean around the dipstick (Fig. 5).

3. Remove the dipstick from the oil fill tube by rotating the cap counterclockwise 1/4 turn and pulling it out.

4. Wipe the dipstick clean with a clean cloth.

5. Fully insert the dipstick into the oil fill tube, then remove it.

Note: For an accurate oil level reading, you must fully install the dipstick.

6. Read the oil level on the dipstick (Fig. 5).

7. If the oil level reading is below the *Add* mark on the dipstick, **slowly** pour only enough oil into the oil fill tube to raise the oil level to the *Full* mark on the dipstick.

IMPORTANT: Do not overfill the crankcase with oil and run the engine; engine damage can result. Drain the excess oil until the oil level on the dipstick reads *Full*.

8. Insert the dipstick into the filler neck and rotate the cap clockwise 1/4 turn.

Filling the Fuel Tank with Gasoline

For best results, use clean, fresh, lead-free gasoline, including *oxygenated* or *reformulated* gasoline, with an octane rating of 87 or higher. To ensure freshness, purchase only the quantity of gasoline that you expect to use in 30 days. Unleaded gasoline burns cleaner, extends engine life, and promotes good starting. You may use leaded gasoline if unleaded gasoline is not available.

IMPORTANT: Do not add oil to the gasoline.

IMPORTANT: Do not use methanol, gasoline containing methanol, gasohol containing more than 10% ethanol, premium gasoline, or white gas. Using these fuels can damage the engine's fuel system.

IMPORTANT: Do not use gasoline that has been stored since the last mowing season or longer.

DANGER

POTENTIAL HAZARD
- **In certain conditions gasoline is extremely flammable and highly explosive.**

WHAT CAN HAPPEN
- **A fire or explosion from gasoline can burn you, others, and cause property damage.**

HOW TO AVOID THE HAZARD
- **Use a funnel and fill the fuel tank outdoors, in an open area, when the engine is cold. Wipe up any gasoline that spills.**
- **Do not fill the fuel tank completely full. Add gasoline to the fuel tank until the level is 1/4 to 1/2 inch (6 mm to 13 mm) below the bottom of the filler neck. This empty space in the tank allows gasoline to expand.**
- **Never smoke when handling gasoline, and stay away from an open flame or where gasoline fumes may be ignited by a spark.**
- **Store gasoline in an approved container and keep it out of the reach of children.**
- **Never buy more than a 30-day supply of gasoline.**

DANGER

POTENTIAL HAZARD
- **When fueling under certain circumstances, a static charge can develop, igniting the gasoline.**

WHAT CAN HAPPEN
- **A fire or explosion from gasoline can burn you and others and cause property damage.**

HOW TO AVOID THE HAZARD
- **Always place gasoline containers on the ground away from your vehicle before filling.**
- **Do not fill gasoline containers inside a vehicle or on a truck or trailer bed because interior carpets or plastic truck bed liners may insulate the container and slow the loss of any static charge.**
- **When practical, remove gas–powered equipment from the truck or trailer and refuel the equipment with its wheels on the ground.**
- **If this is not possible, then refuel such equipment on a truck or trailer from a portable container, rather than from a gasoline dispenser nozzle.**
- **If you must use a gasoline dispenser nozzle, keep the nozzle in contact with the rim of the fuel tank or container opening at all times until fueling is complete.**

Use a fuel stabilizer/conditioner regularly during operation and storage. A stabilizer/conditioner cleans the engine during operation and prevents gum-like varnish deposits from forming in the engine during periods of storage.

IMPORTANT: Do not use fuel additives other than a fuel stabilizer/conditioner. Do not use fuel stabilizers with an alcohol base such as ethanol, methanol, or isopropanol.

1. Disconnect the wire from the spark plug (Fig. 6).

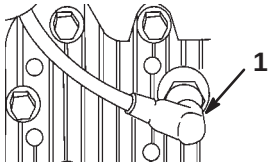

Figure 6

1. Spark plug wire

2. Clean around the fuel tank cap (Fig. 7).



Figure 7

1. Fuel tank cap

3. Remove the fuel tank cap.

4. Fill the fuel tank with unleaded gasoline to within 1/4 to 1/2 inch (6 to 13 mm) from the top of the tank. **Do not fill into the filler neck.**

5. Install the fuel tank cap and wipe up any spilled gasoline.

6. Connect the wire to the spark plug.

Operation

Each time before you mow, make sure that the self-propel drive and the blade control bail operate properly. When you release the blade control bail, the engine and the blade should stop. If they do not, contact an Authorized Service Dealer.

Controls

The starter handle and the blade control bail are on the upper handle as shown in Figure 8.

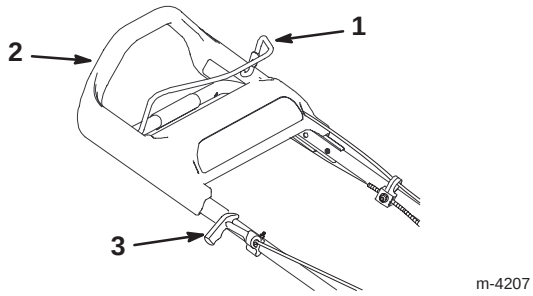

Figure 8

1. Blade control bail
2. Upper handle
3. Starter handle

Starting the Engine

1. Ensure that the wire is installed onto the spark plug.

2. Push the primer three times, waiting two seconds between each push (Fig. 9).

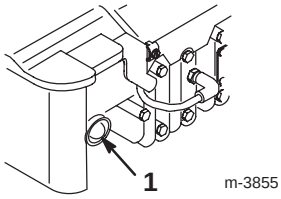

Figure 9

1. Primer

Note: If the temperature is 55°F (13°C) or below, push the primer five times, waiting two seconds between each push.

Note: Do not use the primer to start a warm engine after a brief shutdown. However, cool weather may require you to prime the engine again.

3. Hold the blade control bail against the upper handle (Fig. 8).

4. Pull the starter handle lightly until you feel resistance, then pull it sharply (Fig. 8). Allow the rope return to the handle slowly.

Note: If the engine fails to start after three pulls, repeat steps 2 through 4.

Stopping the Engine

Release the blade control bail. Both the engine and the blade should stop. If they do not stop properly, contact your Authorized Service Dealer.

Using the Self-propel Drive

To operate the self-propel drive, simply walk forward with your hands on the upper handle. As you move forward, the upper handle will slide toward the lawn mower, activating the self-propel drive. The faster you walk, the farther the handle will slide and the faster the lawn mower will propel (Fig. 10).

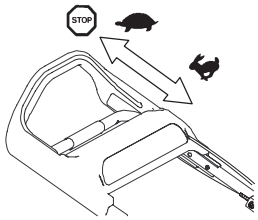

Figure 10

Note: The lawn mower propels at the maximum speed when you push in the upper handle as far forward as possible.

To slow down the drive, simply slow your walking speed; to stop the drive, stop walking (Fig. 10).

Note: If, when backing up after self-propelling, the lawn mower does not roll backward freely, nudge the lawn mower forward about an inch without engaging the self-propel drive, then pull the lawn mower backward.

Adjusting the Cutting Height

You can adjust each wheel individually with a wheel height adjustment lever. Cutting heights are 1 inch (25 mm); 1-1/2 inches (38 mm); 2 inches (51 mm); 2-1/2 inches (64 mm); 3 inches (74 mm); and 3-1/2 inches (86 mm).

DANGER

POTENTIAL HAZARD
- **Adjusting the height-of-cut levers could bring your hands into contact with the moving blade.**

WHAT CAN HAPPEN
- **Contact with a rotating blade can cause serious injury.**

HOW TO AVOID THE HAZARD
- **Stop the engine and wait for all movement to stop before adjusting the cutting height.**
- **Do not put your fingers under the lawn mower housing when adjusting the cutting height.**

1. Pull the wheel height adjustment lever toward the wheel and move it to the desired position (Fig. 11).

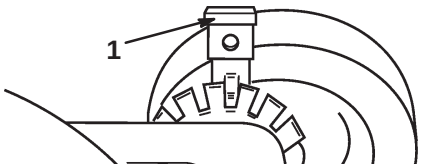

Figure 11

1. Wheel height adjustment lever

2. Release the wheel height adjustment lever and seat it securely in the notch.

Note: Set all four wheels at the same height.

Using the Discharge Tunnel Plug

1. Turn the engine off and wait for all moving parts to stop.

2. Open the discharge door by moving the discharge door handle rearward (Fig. 12).

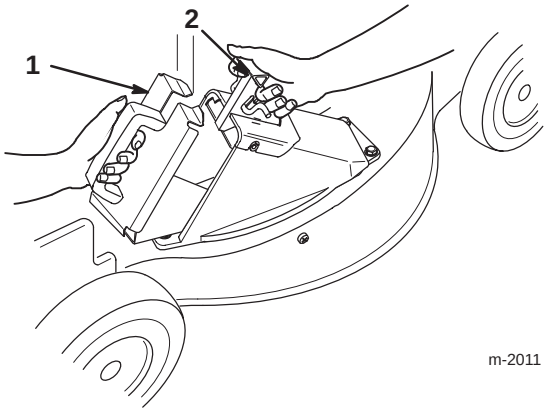

Figure 12

1. Plug
2. Discharge door handle

3. Hold the discharge door fully open and insert the plug (Fig. 13).

Note: Fit the lower section of the plug into the opening first.

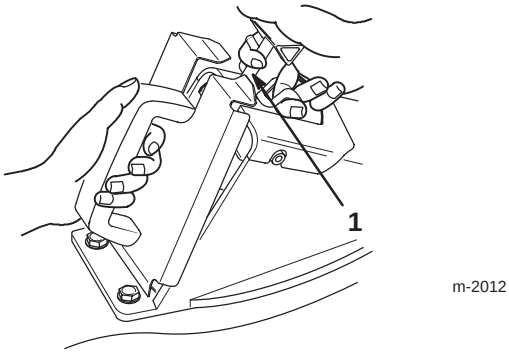

Figure 13

1. Door latch

4. Lift the door latch on the door handle (Fig. 13) and push the top of the plug all the way in while moving the door handle rearward.

5. Release the door latch, allowing it to hook over the tabs on the plug (Fig. 14).

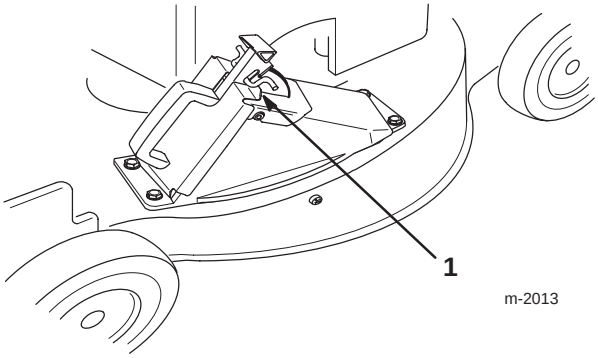

Figure 14

1. Tab (2)

6. To remove the plug:

A. Pull up on the door latch and hold the discharge door fully open.

B. When the plug is unlocked, pull it out of the discharge tunnel.

Note: To install and remove the plug more easily, hold the door fully open so that it will not interfere with the lower end of the plug.

Operating Tips

- Review the safety instructions and read this manual carefully before operating the lawn mower.
- Clear the area of sticks, stones, wire, branches, and other debris that the lawn mower could pick up or the blade could hit and throw objects.

- Keep everyone, especially children and pets, away from the area of operation.
- Avoid striking trees, walls, curbs, or other solid objects. Never deliberately mow over any object.
- If the lawn mower strikes an object or starts to vibrate, immediately stop the engine, disconnect the spark plug wire, and examine the lawn mower for damage.
- Maintain a **sharp blade** throughout the cutting season. Periodically file down nicks on the blade.
- Replace the blade when necessary with an original Toro replacement blade.
- Mow only dry grass or leaves. Wet grass and leaves tend to clump on the yard and can cause the lawn mower to plug or the engine to stall.

WARNING

POTENTIAL HAZARD
- **Wet grass or leaves can cause you to slip and contact the blade.**

WHAT CAN HAPPEN
- **Blade contact can seriously injure you.**

HOW TO AVOID THE HAZARD
- **Mow only in dry conditions.**

- Clean the clippings or leaves from the underside of the lawn mower deck after each mowing. See *Cleaning the Underside of the Lawn Mower Housing* on page 15.
- Keep the engine in good running condition.

WARNING

POTENTIAL HAZARD
- **Operating a lawn mower with its engine running at a speed greater than the factory setting can cause an unsafe operating condition.**

WHAT CAN HAPPEN
- **The lawn mower could throw a part of the blade or engine into the operator's or bystander's area and cause serious personal injury or death.**

HOW TO AVOID THE HAZARD
- **Do not change the engine speed setting.**
- **If you suspect the engine speed is faster than normal, contact your Authorized Service Dealer.**

- Clean the air filter frequently. Mulching stirs up more clippings and dust which clogs the air filter and reduces engine performance.

Cutting Grass

- Grass grows at different rates at different times of the year. In the summer heat, it is best to cut grass at the 2-, 2-1/2-, or 3-inch cutting height settings. Cut only about a third of the grass blade at a time. Do not cut below the 2-inch setting unless the grass is sparse or it is late fall when grass growth begins to slow down.
- When cutting grass over six inches tall, first mow using the highest cutting height setting and walking slower; then mow again at a lower setting for best lawn appearance. If the grass is too long and the leaves clump on top of the lawn, the lawn mower may plug and cause the engine to stall.
- Alternate the mowing direction. This helps disperse the clippings over the lawn for even fertilization.

If the finished cut lawn appearance is unsatisfactory, try one or more of the following:

- Sharpen the blade.
- Walk at a slower pace while mowing.
- Raise the cutting height setting on your lawn mower.
- Cut the grass more frequently.
- Overlap cutting swaths instead of cutting a full swath with each pass.
- Mow across the marginal areas a second time.
- Set the cutting height on the front wheels one notch lower than the rear wheels.

Cutting Leaves

- After cutting the lawn, make sure that half of the lawn shows through the cut leaf cover. You may need to make one or more passes over the leaves.
- For light leaf coverage, set all the wheels at the same cutting height setting.
- If there are more than five inches (12.7 cm) of leaves on the lawn, set the front wheels one or two notches higher than the rear wheels. This makes it easier to feed the leaves under the lawn mower deck.
- Slow down your mowing speed if the lawn mower does not cut the leaves finely enough.
- If you cut up a lot of oak leaves, you can add lime to your grass in the spring to reduce the acidity of the oak leaves.

Adjusting the Handle Height

The handle has three height positions: high, medium, and low (Fig. 15). Select a handle height position that is most comfortable for you.

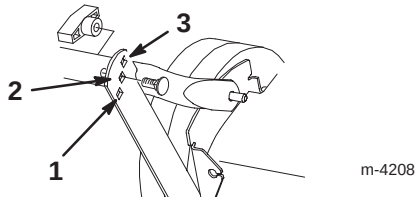

Figure 15

1. Low setting
2. Middle setting
3. High setting

1. Remove the handle bolts and knobs from the lower handle section and the support brackets (Fig. 15).

2. Secure the handle to the support bracket with two handle bolts installed from the outside and two knobs, using the height adjustment holes on the brackets that best fits your height (Fig. 15).

Maintenance

Recommended Maintenance Schedule

Service Item	Service Operation	Each Use	5 Hours	25 Hours	50 Hours	100 Hours
Engine Oil—Check	Check the engine oil before each use.	X				
Engine Oil—Change	Drain and refill the engine crankcase with fresh oil after the first five hours of operation. Thereafter, change every 50 operating hours (25 operating hours in dusty conditions or in high temperatures) or yearly.				X	
Housing	Remove built-up grass clippings and dirt.	X				
Fasteners	Check the blade and the engine mounting fasteners. Tighten loose fasteners.		X			
Air Filter	Clean or replace the cartridge every 25 operating hours or each mowing season. Replace it more frequently in dusty or dirty conditions.			X		
Blade	Sharpen or replace the blade; maintain it more frequently if the edge dulls quickly in rough or sandy conditions.				X	
Blade Brake	Check the stopping time every 50 operating hours or before each mowing season. The blade must stop within three seconds of releasing the bail; if it does not, see your Authorized Service Dealer for repair.				X	
Self-propelled Drive	Adjust the cable and grease the rear-height adjustor brackets.				X	
Fuel System	Check for leaks and/or a deteriorating fuel hose. Replace parts if necessary.				X	
Belt Cover	Remove grass clippings and debris from under the belt cover.				X	

Service Item	Service Operation	Each Use	5 Hours	25 Hours	50 Hours	100 Hours
Spark Plug	Inspect and clean. Replace the spark plug if necessary.					X
Cooling System	Clean debris from the engine air cooling fins and the starter. Clean more frequently in dirty conditions.					X
Fuel Tank	Empty the fuel tank before repairs as directed or before storage.					

CAUTION

POTENTIAL HAZARD
- **If you leave the wire on the spark plug, someone could start the engine.**

WHAT CAN HAPPEN
- **Someone accidentally starting the engine could seriously injure you or other bystanders.**

HOW TO AVOID THE HAZARD
- **Remove the wire from the spark plug before you do any maintenance. Set the wire aside so it does not accidentally contact the spark plug.**

Checking the Engine Oil Level

Before you use the lawn mower, make sure that the oil level between the *Add* and the *Full* marks as shown on the dipstick (Fig. 5). If the oil level is below the *Add* mark, add oil. Refer to *Filling the Crankcase with Oil* on page 8.

Changing the Engine Oil

Change the oil after the first five operating hours and then after every 50 operating hours or every season. Run the engine just before changing the oil to warm the oil. Warm oil flows better and carries more contaminants.

Note: Change the oil after every 25 operating hours when operating under heavy load or in high temperatures.

WARNING

POTENTIAL HAZARD
- **Tipping the lawn mower may cause the fuel to leak from the carburetor or the fuel tank.**

WHAT CAN HAPPEN
- **Gasoline is extremely flammable, highly explosive and under certain conditions can cause personal injury or property damage.**

HOW TO AVOID THE HAZARD
- **Avoid fuel spills by running the engine dry or removing gasoline with a hand pump; never siphon.**

Draining the Oil above the Lawn Mower Deck

1. Drain the gasoline from the fuel tank; refer to *Emptying the Fuel Tank* on page 20.
2. Start the engine and let it run until it runs out of fuel.
3. Disconnect the wire from the spark plug (Fig. 6).
4. Remove the dipstick.
5. Tip the lawn mower onto its left side, allowing the oil to drain into an appropriate container (Fig. 16).

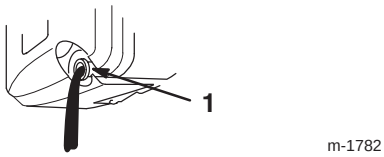

Figure 16

1. Oil fill tube

6. Recycle the used oil according to local codes.

7. Turn the lawn mower upright.

8. Fill the crankcase with fresh oil to the *Full* mark on the dipstick. Refer to *Filling the Crankcase with Oil* on page 8.

9. Install the dipstick.

10. Wipe up any spilled oil.

11. Connect the wire onto the spark plug.

Draining the Oil below the Lawn Mower Deck

Note: You need a 3/8-in. ratchet extension to perform this procedure.

WARNING

POTENTIAL HAZARD
- **The blade is sharp.**

WHAT CAN HAPPEN
- **Contact with a sharp blade can cause serious personal injury.**

HOW TO AVOID THE HAZARD
- **Wear gloves or wrap the sharp edges of the blade with a rag.**

1. Disconnect the wire from the spark plug (Fig. 6).

2. Drain the gasoline from the fuel tank; refer to steps 3 and 4 of *Emptying the Fuel Tank* on page 20.

3. Tip the lawn mower onto its **left** side and secure it to prevent it from falling.

4. Place a drain pan under the lawn mower.

5. Remove the oil drain plug, return the lawn mower to its operating position, and allow the oil to drain into the drain pan (Fig. 17).

IMPORTANT: Avoid spilling oil on the belt.

IMPORTANT: You may need to move the blade to get to the oil drain plug. Move the blade as little as possible to avoid future starting problems.

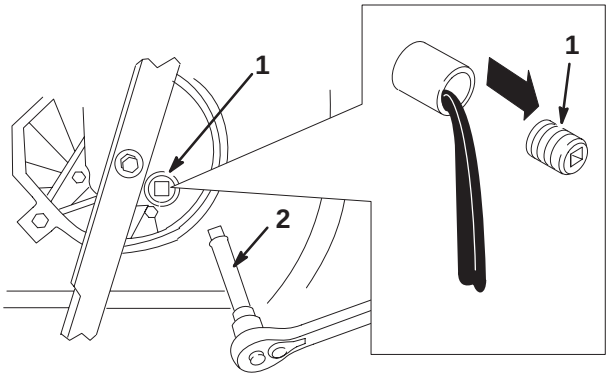

Figure 17

1. Oil drain plug
2. 3/8-in. Ratchet extension

6. Tip the lawn mower onto its **left** side and install the oil drain plug.

7. Fill the crankcase with fresh oil to the *Full* mark on the dipstick. Refer to *Filling the Crankcase with Oil* on page 8**.**

8. Wipe up any spilled oil.

9. Connect the wire onto the spark plug.

10. Recycle the used oil according to local codes.

Cleaning the Underside of the Lawn Mower Housing

To ensure best performance, keep the underside of the lawn mower housing clean. Be especially careful to keep the kickers free of debris (Fig. 18).

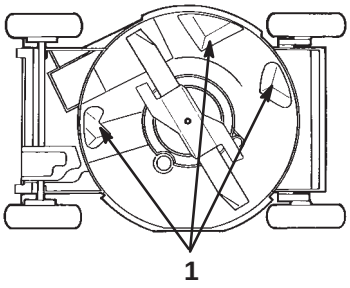

Figure 18

1. Kickers

Washing Method

1. Position the lawn mower on a flat, concrete or asphalt surface near a garden hose.

2. Start the engine.

3. Hold the running garden hose at handle level and direct the water to flow on the ground just in front of the right rear tire (Fig. 19).

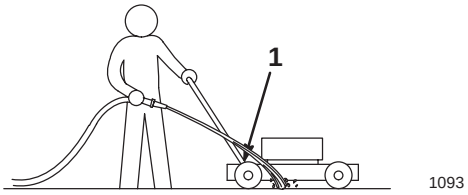

Figure 19

1. Rear right wheel

Note: The blade will draw in water and wash out clippings. Let the water run until you no longer see clippings being washed out from under the housing.

4. Stop the engine and wait for all moving parts to stop.
5. Turn off the garden hose.
6. Start the lawn mower and let it run for a few minutes to dry out the moisture on the lawn mower and its components.
7. While the engine is running, engage and disengage the traction drive several times to dry it out.

Scraping Method

If washing does not remove all the debris from under the lawn mower, tip it and scrape it clean.

1. Disconnect the wire from the spark plug (Fig. 6).
2. Drain the gasoline from the fuel tank. Refer to the *Emptying the Fuel Tank* on page 20.

WARNING

POTENTIAL HAZARD
- **Gasoline is extremely flammable, highly explosive and under certain conditions can cause personal injury or property damage.**

WHAT CAN HAPPEN
- **Tipping the lawn mower may cause fuel leakage from the carburetor or fuel tank.**

HOW TO AVOID THE HAZARD
- **Avoid fuel spills by running the engine dry or removing gas with a hand pump; never siphon.**

3. Tip the lawn mower onto its left side (Fig. 18).
4. Remove dirt and grass clippings with a hardwood scraper. Avoid burrs and sharp edges.

IMPORTANT: Move the blade as little as possible to avoid starting problems.

5. Turn the lawn mower upright.
6. Fill the gas tank.
7. Connect the spark plug wire.

Servicing the Air Filter

Replace the air filter once every season or every 25 operating hours; replace it more frequently in dusty operating conditions.

IMPORTANT: Do not operate the engine without the air filter element; extreme engine damage will occur.

1. Stop the engine and wait for all moving parts to stop.
2. Disconnect the wire from the spark plug (Fig. 6).
3. Loosen the screw that secures the air filter cover to the engine (Fig. 20).

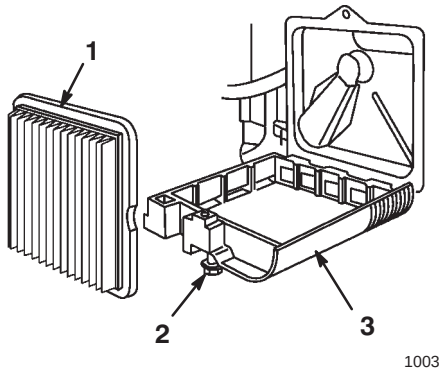

Figure 20

1. Air filter
2. Screw
3. Cover

4. Tilt the air cleaner cover down and clean the cover thoroughly (Fig. 20).
5. Remove and discard the paper air cleaner filter (Fig. 20).

IMPORTANT: Do not try to clean a paper filter.

6. Insert a new paper air cleaner filter.
7. Install the air cleaner cover and secure it with a screw.

IMPORTANT: Do not operate the engine without the air filter element; extreme engine wear and damage can occur.

Maintaining the Blade

A straight, sharp blade provides the best cutting performance. Regularly inspect and sharpen the blade.

WARNING

POTENTIAL HAZARD
- **The blade is sharp.**

WHAT CAN HAPPEN
- **Contact with a sharp blade can cause serious personal injury.**

HOW TO AVOID THE HAZARD
- **Wear gloves or wrap the sharp edges of the blade with a rag.**

1. Stop the engine and wait for all moving parts to stop.
2. Disconnect the wire from the spark plug (Fig. 6).

WARNING

POTENTIAL HAZARD
- **Gasoline is extremely flammable, highly explosive and under certain conditions can cause personal injury or property damage.**

WHAT CAN HAPPEN
- **Tipping the lawn mower may cause fuel leakage from the carburetor or fuel tank.**

HOW TO AVOID THE HAZARD
- **Avoid fuel spills by running the engine dry or removing gas with a hand pump; never siphon.**

3. Drain the gasoline from the fuel tank. Refer to the *Emptying the Fuel Tank* on page 20.
4. Tip the lawn mower on its left side (Fig. 21).

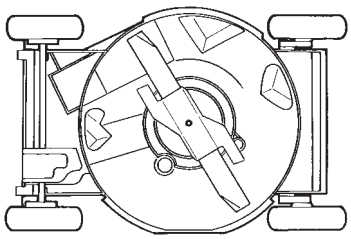

Figure 21

IMPORTANT: Move the blade as little as possible to avoid future staring problems.

Inspecting the Blade

Carefully examine the blade for sharpness and wear, especially where the flat and the curved parts meet (Fig. 22A). Because sand and abrasive material can wear away the metal that connects the flat and curved parts of the blade, check the blade before using the lawn mower. If you notice a slot or wear (Figs. 22B and 22C), replace the blade; refer to *Removing the Blade* on page 17.

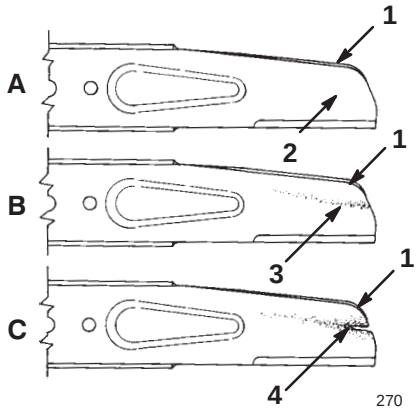

Figure 22

1. Sail
2. Flat part of blade
3. Wear
4. Slot formed

Note: For the best performance, install a new blade before the cutting season begins. During the year, file down any small nicks to maintain the cutting edge.

DANGER

POTENTIAL HAZARD
- **A worn or damaged blade could break and a piece of the blade could be thrown into the operator's or bystander's area.**

WHAT CAN HAPPEN
- **A thrown piece of the blade could cause serious personal injury or death to the operator or bystanders.**

HOW TO AVOID THE HAZARD
- **Inspect the blade periodically for wear or damage.**
- **Replace a worn or damaged blade.**

Removing the Blade

1. Grasp the end of the blade using a rag or a thickly padded glove.
2. Remove the blade bolt, the lock washer, the blade accelerator, and the blade (Fig. 23).

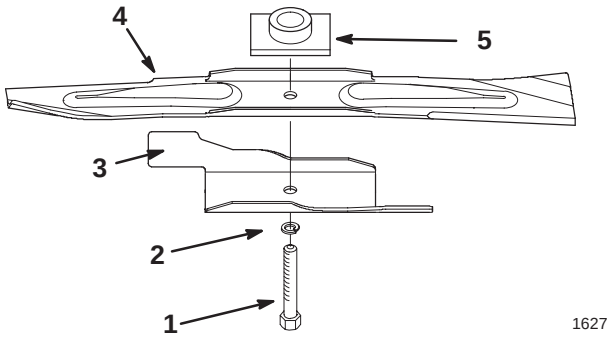

Figure 23

1. Blade bolt
2. Lock washer
3. Accelerator
4. Blade
5. Blade driver

Sharpening the Blade

File the top side of the blade to maintain its original cutting angle (Fig. 24A) and inner cutting edge radius (Fig. 24B).

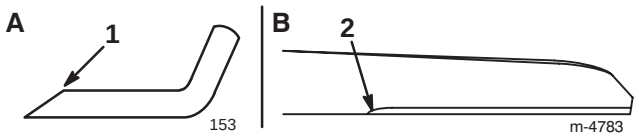

Figure 24

1. Sharpen at this angle only
2. Maintain the original radius here

Note: The blade will remain balanced if you remove the same amount of material from both cutting edges.

Balancing the Blade

1. Check the balance of the blade by placing the center hole of the blade over a nail or screwdriver shank clamped horizontally in a vise (Fig. 25).

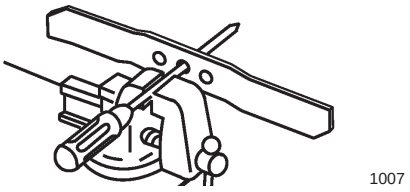

Figure 25

Note: You can also check the balance using a commercially manufactured, blade balancer.

2. If either end of the blade rotates downward, file that end (not the cutting edge or the end near the cutting edge). The blade is properly balanced when neither end drops.

Installing the Blade

1. Position the blade onto the spindle and the blade driver, with the curved blade tips pointing toward the lawn mower and the blade driver nesting in the recess of the blade (Fig. 23).

2. Install the accelerator, the lock washer, and the blade bolt (Fig. 23).

3. Tighten the blade bolt to 50 ft-lb (68 N·m).

WARNING

POTENTIAL HAZARD
- **Operating the lawn mower without the accelerator in place could cause the blade to flex, bend, or break.**

WHAT CAN HAPPEN
- **A broken blade could cause serious injury or death to the operator or bystanders.**

HOW TO AVOID THE HAZARD
- **Do not operate the lawn mower without the accelerator.**

Adjusting the Self-propel Drive Cable

If the top speed begins to decrease on the lawn mower, adjust the self-propel drive cable.

1. With the engine turned off, remove the bolt that secures the belt cover (Fig. 26) and remove the cover.

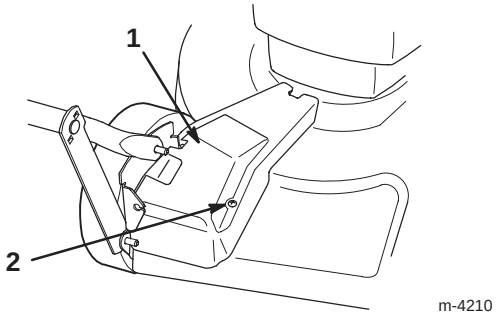

Figure 26

1. Belt cover
2. Bolt

2. Loosen the cable support nut (Fig. 27).

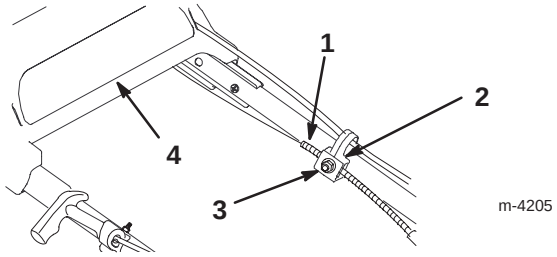

Figure 27

1. Cable jacket
2. Cable support
3. Nut
4. Upper handle

3. Push the drive bracket down until it contacts the lawn mower, then hold it in place (Fig. 28).

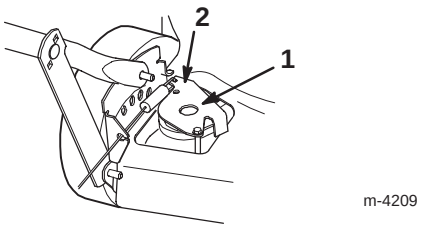

Figure 28

1. Drive bracket
2. Push here

4. With the upper handle pushed back as far as possible and while holding the drive bracket down, pull the cable jacket down (toward the lawn mower) until there is no slack in the cable (Fig. 27).
5. Tighten the nut on the cable support (Fig. 27).
6. Release the drive bracket.
7. Install the belt cover.

Lubricating the Self-propel Drive

1. Wipe the grease fittings on the rear wheel height adjustment levers (Fig. 29) with a clean rag.

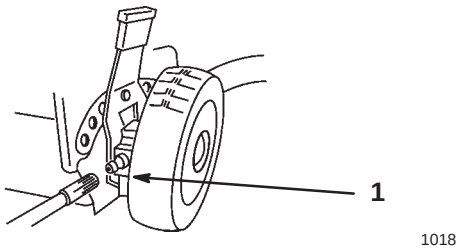

Figure 29

1. Grease fitting

2. Install a grease gun onto each fitting in turn and gently apply one or two pumps of #2 multi-purpose lithium grease to each.

IMPORTANT: Excess grease may damage the seals and prevent the wheel clutch from properly operating.

Cleaning Under the Belt Cover

Keep the area under the belt cover free of debris.

1. With the engine off, remove the bolt that secures the belt cover (Fig. 30) to the lawn mower housing.

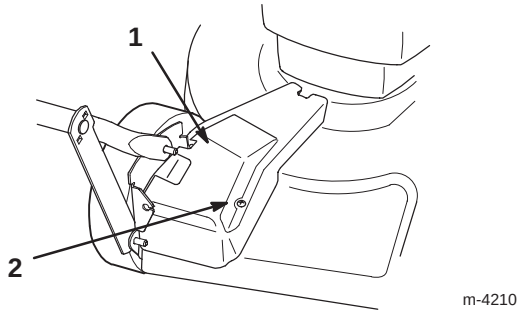

Figure 30

1. Belt cover
2. Bolt

2. Lift off the cover and brush out all debris from the belt area.
3. Install the belt cover.

Maintaining the Spark Plug

Use a *Champion RJ19LM* spark plug or equivalent. Set the gap to 0.030 inch (0.76 mm). Remove the spark plug and check its condition after every 25 operating hours.

1. Stop the engine and wait for all moving parts to stop.
2. Disconnect the wire from the spark plug (Fig. 31).

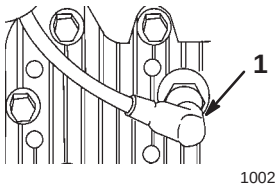

Figure 31

1. Spark plug wire

3. Clean around the spark plug and remove it from the cylinder head.

IMPORTANT: Replace a cracked, fouled, or dirty spark plug. Do not clean the electrodes because engine damage could result from grit entering the cylinder.

4. Set the gap on the new plug as shown in Figure 32.

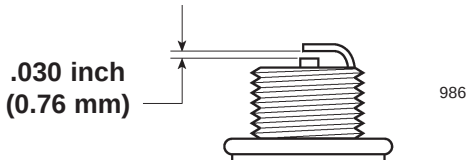

Figure 32

5. Install the spark plug and gasket seal. Torque the spark plug to 15 ft-lb (20 N·m).
6. Connect the wire to the spark plug.

Emptying the Fuel Tank

1. Stop the engine and wait for it to cool.

IMPORTANT: Drain gasoline from a cold engine only.

2. Disconnect the wire from the spark plug (Fig. 31).
3. Remove the cap from the fuel tank (Fig. 7).
4. Use a pump-type syphon to drain the gasoline into a clean approved gasoline container.
5. Connect the wire onto the spark plug.
6. Run the engine until it stops.
7. Start the engine again to make sure that all the gasoline is out of the carburetor.

Storage

To prepare the lawn mower for off-season storage, perform the recommended maintenance procedures. Refer to *Maintenance* on page 13.

Store the lawn mower in a cool, clean, dry place. Cover the lawn mower to keep it clean and protected.

Preparing the Fuel System

WARNING

POTENTIAL HAZARD
- **Gasoline can vaporize if stored over long periods of time.**

WHAT CAN HAPPEN
- **Vaporized fuel can explode if it comes into contact with open flame.**

HOW TO AVOID THE HAZARD
- **Do not store gasoline (fuel) over long periods of time.**
- **Do not store lawn mower with fuel in the tank in an enclosure with an open flame. (Example: a furnace or water heater pilot light.)**
- **Allow the engine to cool before storing in any enclosure.**

Empty the fuel tank when mowing the last time before storing the lawn mower.

1. Run the lawn mower until the engine stops from running out of fuel.
2. Prime the engine and start it again.
3. Allow the engine to run until it stops. When you can no longer start the engine, it is sufficiently dry.

Preparing the Engine

1. While the engine is still warm, change the oil in the crankcase. Refer to *Changing the Engine Oil* on page 14.
2. Remove the spark plug (Fig. 31).
3. Using an oil can, add about one tablespoon of oil through the spark plug hole.
4. Slowly rotate the engine several times using the starter rope to distribute the oil.
5. Install the spark plug but **do not** connect the wire to the spark plug.

General Information

1. Clean the lawn mower housing. Refer to *Cleaning the Underside of the Lawn Mower Housing* on page 15.
2. Clean any dirt and chaff from the cylinder, cylinder head fins, and blower housing.

3. Remove grass clippings, dirt, and grime from the external parts of the engine, the shrouding, and the top of the lawn mower housing.
4. Check the condition of the blade. Refer to *Maintaining the Blade* on page 17.
5. Tighten all nuts, bolts, and screws.
6. Lubricate the self-propel drive. Refer to *Lubricating the Self-Propel Drive* on page 19.
7. Touch up all rusted or chipped paint surfaces with paint available from an Authorized Service Dealer.

Folding the Handle

WARNING

POTENTIAL HAZARD
- **Folding or unfolding the handle improperly can pinch, stretch, or damage one or more of the cables.**

WHAT CAN HAPPEN
- **Any pinched, stretched, or damaged cable may cause an operational failure that results in an unsafe operating condition.**

HOW TO AVOID THE HAZARD
- **Do not pinch, stretch, or damage the cables.**
- **Handle the cables with care when folding or unfolding the handle.**
- **Do not use the lawn mower if one or more of the cables are pinched, stretched, or damaged. Contact your Authorized Service Dealer.**

IMPORTANT: Do not remove or loosen the knobs that secure the lower handle to the swing bracket. Do not fold the upper handle backward.

1. Loosen the knobs that secure the upper handle section.
2. Carefully swing the upper handle forward until it rests on the engine (Fig. 33).

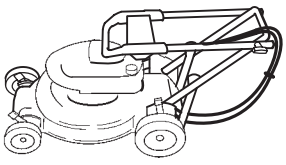

m-4217

Figure 33

Removing From Storage

WARNING

POTENTIAL HAZARD
- **Folding or unfolding the handle improperly can pinch, stretch, or damage one or more of the cables.**

WHAT CAN HAPPEN
- **Any pinched, stretched, or damaged cable may cause an operational failure that results in an unsafe operating condition.**

HOW TO AVOID THE HAZARD
- **Do not pinch, stretch, or damage the cables.**
- **Handle the cables with care when folding or unfolding the handle.**
- **Do not use the lawn mower if one or more of the cables are pinched, stretched, or damaged. Contact your Authorized Service Dealer.**

1. Carefully unfold the upper handle until it nests with the lower handle, then tighten the knobs.
2. Check and tighten all fasteners.
3. Remove the spark plug (Fig. 31) and spin the engine rapidly using the starter to blow the excess oil from the cylinder.
4. Clean the spark plug or replace it if it is cracked, broken, or if the electrodes are worn.
5. Install the spark plug and torque it to 15 ft-lb (20 N·m).
6. Perform the recommended maintenance procedures; refer to *Maintenance* on page 13.
7. Fill the fuel tank (Fig. 7) with fresh, clean gasoline.

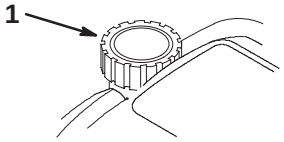

1626

Figure 34

1. Fuel tank cap

8. Check the engine oil level. Refer to *Checking the Engine Oil Level* on page 14.
9. Connect the wire to the spark plug.

Accessories

Accessories may have been shipped with your lawn mower or are available from your Authorized Service Dealer. For proper installation, follow these instructions.

Installing the Rear Grass Catcher

1. Stop the engine and wait for all moving parts to stop.
2. Ensure that the discharge door handle is fully forward (door closed) (Fig. 35).

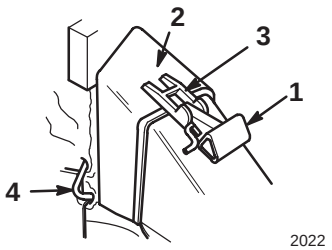

Figure 35

1. Handle fully forward
2. Bag door
3. Bag door latch
4. Bag rod hook in front of handle bracket

Note: In Figure 35, the brush guard is not shown for the purpose of clarity.

DANGER

POTENTIAL HAZARD
- **Thrown objects may result if the discharge door does not close completely.**

WHAT CAN HAPPEN
- **Thrown objects can cause serious personal injury or death to the operator or bystanders.**

HOW TO AVOID THE HAZARD
- **If the discharge door cannot be closed because grass clippings clog the discharge area, stop the engine and gently move the discharge door handle back and forth until the door can be closed completely. If door still cannot be closed, remove the obstruction with a stick, not your hand.**

3. Fit the bag door opening over the discharge tunnel opening as shown in Figure 35.

   Note: The bag door latch should straddle the door handle, and the bag rod hook should be in front of the handle bracket.

4. Set the rear of the bag frame onto the lower handle.
5. Pull the handle rearward until the handle latch locks into the notch in the bag door latch (Fig. 36).

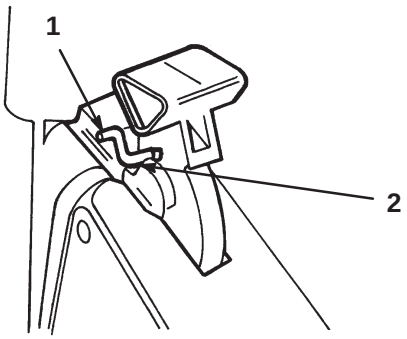

Figure 36

1. Handle latch locked in bag notch
2. Notch in bag door latch

Note: In Figure 36, the brush guard is not shown for the purpose of clarity.

The discharge door in the lawn mower housing is now open and the bag is locked into position. The latch should seat in bottom of the notch.

DANGER

POTENTIAL HAZARD
- **Grass clippings and other objects can be thrown from an open discharge tunnel.**

WHAT CAN HAPPEN
- **Objects thrown with enough force could cause serious personal injury or death to the operator or bystander.**

HOW TO AVOID THE HAZARD
- **Never open the door on the discharge tunnel when the engine is running.**

DANGER

POTENTIAL HAZARD
- **A worn grass bag could allow small stones and other similar debris to be thrown in operator's or bystander's direction.**

WHAT CAN HAPPEN
- **Thrown objects can cause serious personal injury or death to the operator or bystanders.**

HOW TO AVOID THE HAZARD
- **Check the grass bag frequently. If it is damaged, install a new genuine Toro replacement bag that has this or a similar warning.**

Emptying the Grass Bag

1. Stop the engine and wait for all moving parts to stop.
2. Lift the door latch until it clears the bag notch and move the discharge door handle forward (Fig. 35).
3. Grasp the bag frame handle and the rear of the grass bag and lift the bag off the lawn mower.
4. Gradually tip the bag forward to empty the clippings.

Installing the Side Discharge Chute

1. Stop the engine and wait for all moving parts to stop.
2. Disconnect the wire from the spark plug (Fig. 31).
3. If the grass bag is installed, remove it.
4. Remove the bolt and side cover clamp, then replace the bolt in the hole and save the clamp for future use (Fig. 37).

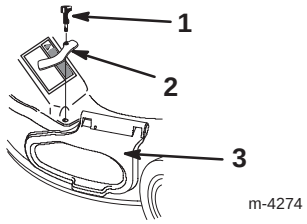

Figure 37

1. Bolt
2. Side cover clamp
3. Side opening cover

5. Lift up on the side opening cover (Fig. 37).
6. Slide the chute over the opening with the slots in the chute lined up with the tabs under the cover (Fig. 38).

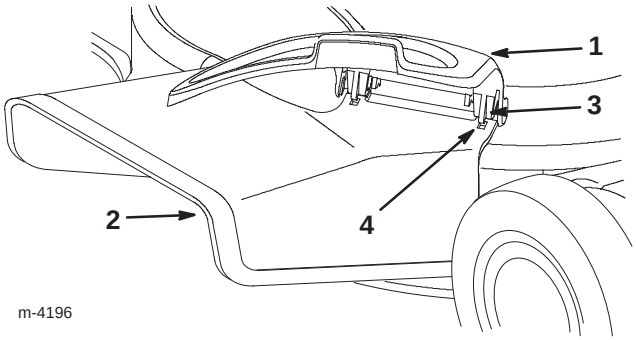

Figure 38

1. Side opening cover
2. Side discharge chute
3. Tab
4. Slot

7. Close the cover.

Removing the Side Discharge Chute

1. Stop the engine and wait for all moving parts to stop.
2. Disconnect the wire from the spark plug (Fig. 31).
3. Open the side opening cover and remove the side discharge chute (Fig. 38).
4. Close the cover.
5. Remove the knob.
6. Install the side cover clamp and the knob, securing the side opening cover (Figs. 37 and 39).

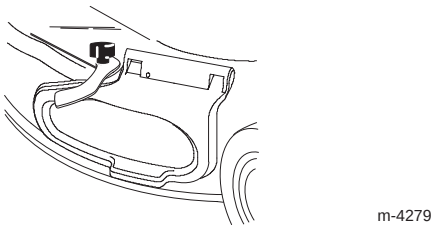

Figure 39

DANGER

POTENTIAL HAZARD

- **If the side opening cover is not securely clamped in place, debris could be thrown out of the side opening.**

WHAT CAN HAPPEN

- **Thrown debris can cause serious personal injury or death to the operator or bystanders.**

HOW TO AVOID THE HAZARD

- **Always ensure that either the side opening cover is closed and locked in place by the side cover clamp or that the side discharge chute is securely seated in place before starting the lawn mower.**

Troubleshooting

Toro designed and built your lawn mower for trouble-free operation. Check the following components and items carefully. If a problem continues, see your Authorized Service Dealer.

PROBLEM	CORRECTIVE ACTION
Engine will not start	1. Fill the fuel tank with fresh gasoline. 2. Press the primer three times. 3. Connect the wire to the spark plug. 4. Inspect the spark plug, check the spark plug gap, and replace the spark plug if it is damaged.
Engine starts hard or loses power	1. Drain and fill the fuel tank with fresh gasoline. 2. Clean the gasoline cap vent hole. 3. Clean the air filter. 4. Clean the lawn mower discharge chute. 5. Clean the underside of the lawn mower deck. 6. Inspect the spark plug, check the spark plug gap, and replace the spark plug if it is damaged. 7. Check the engine oil.
Engine runs rough	1. Connect the spark plug wire. 2. Inspect the spark plug, check the spark plug gap, and replace the spark plug if it is damaged. 3. Clean the air filter.
Lawn mower or engine vibrates excessively	1. Balance the blade. 2. Tighten the blade mounting nut. 3. Clean the lawn mower discharge chute. 4. Clean the underside of the lawn mower deck. 5. Tighten the engine mounting bolts.
Uneven cutting pattern	1. Place all four wheels at the same height. 2. Sharpen and balance the blade. 3. Change the mowing pattern. 4. Clean the underside of lawn mower deck.
Discharge chute plugs	1. Raise the cutting height. 2. Allow the grass to dry before mowing. 3. Clean the underside of lawn mower deck.
Lawn Mower will not self-propel	1. Adjust the self-propel drive cable. 2. Clean the debris under the belt cover.