Form No. 3326-905

TORO®

62″ Side Discharge Mower

Groundsmaster® 200 Series

Model No. 30551—Serial No. 220000001 and Up

Operator’s Manual

Domestic English (EN)

Contents

	Page
Introduction	2
Safety	3
Safe Operating Practices	3
Toro Mower Safety	4
Safety and Instruction Decals	5
Specifications	7
General Specifications	7
Optional Equipment	7
Setup	8
Loose Parts	8
Installing the Castor Wheel Assemblies	9
Installing the Lift Arms to the Traction Unit	9
Connecting the Lift Arms to the Cutting Unit	10
Mounting the PTO Shaft Guard and Connecting the PTO Shaft to the Cutting Unit Gear Box	11
Installing the Weight Transfer Kit	11
Installing Rear Weight	13
Before Operating	13
Adjusting the Height-of-Cut	13
Adjusting the Rollers and Gage Wheel	14
Checking the Lubricant in the Gear Box	15
Greasing the Cutting Unit	15
Operation	15
Using the Grass Deflector	15
Adjusting the Tension Spring	16
Maintenance	16
Greasing the Bearings, Bushings, and Gear Box	16
Separating the Cutting Unit from the Traction Unit	17
Mounting the Cutting Unit to the Traction Unit	18
Servicing the Castor Arm Bushings	18
Servicing the Castor Wheels and Bearings	18
Checking for a Bent Blade	19
Removing the Cutting Blade	19
Inspecting and Sharpening the Blade	20
Checking and Correcting Mismatch of Blades	21
Replacing the Grass Deflector	21
Adjusting the Idler Pulley	22
Adjusting the Cover Latches	22
Replacing the Drive Belt	22
Troubleshooting	23
The Toro General Commercial Products Warranty	24

Introduction

Read this manual carefully to learn how to operate and maintain your product properly. The information in this manual can help you and others avoid injury and product damage. Although Toro designs and produces safe products, you are responsible for operating the product properly and safely.

Whenever you need service, genuine Toro parts, or additional information, contact an Authorized Service Dealer or Toro Customer Service and have the model and serial numbers of your product ready. The numbers are stamped into a plate which is located on the carrier frame behind the right front castor wheel.

Write the product model and serial numbers in the space below:

Model No. _____

Serial No. _____

This manual identifies potential hazards and has special safety messages that help you and others avoid personal injury and even death. ***Danger***, ***Warning***, and ***Caution*** are signal words used to identify the level of hazard. However, regardless of the hazard, be extremely careful.

Danger signals an extreme hazard that *will* cause serious injury or death if you do not follow the recommended precautions.

Warning signals a hazard that *may* cause serious injury or death if you do not follow the recommended precautions.

Caution signals a hazard that may cause minor or moderate injury if you do not follow the recommended precautions.

This manual uses two other words to highlight information. **Important** calls attention to special mechanical information and **Note:** emphasizes general information worthy of special attention.

© 2001 by The Toro Company

8111 Lyndale Avenue South
Bloomington, MN 55420-1196

All Rights Reserved

Printed in the USA

Safety

This machine meets or exceeds the B71.4 1999 specifications of the American National Standards Institute, in effect at time of production.

Improper use or maintenance by the operator or owner can result in injury. To reduce the potential for injury, comply with these safety instructions and always pay attention to the safety alert ⚠ symbol, which means CAUTION, WARNING, or DANGER—"personal safety instruction." Failure to comply with the instruction may result in personal injury or death.

Safe Operating Practices

The following instructions are from ANSI standard B71.4—1999.

Training

- Read the Operator's Manual and other training material. If the operator(s) or mechanic(s) can not read English it is the owner's responsibility to explain this material to them.
- Become familiar with the safe operation of the equipment, operator controls, and safety signs.
- All operators and mechanics should be trained. The owner is responsible for training the users.
- Never let children or untrained people operate or service the equipment. Local regulations may restrict the age of the operator.
- The owner/user can prevent and is responsible for accidents or injuries occurring to himself or herself, other people or property.

Preparation

- Evaluate the terrain to determine what accessories and attachments are needed to properly and safely perform the job. Only use accessories and attachments approved by the manufacturer.
- Wear appropriate clothing including hard hat, safety glasses and ear protection. Long hair, loose clothing or jewelry may get tangled in moving parts.
- Inspect the area where the equipment is to be used and remove all objects such as rocks, toys and wire which can be thrown by the machine.
- Use extra care when handling gasoline and other fuels. They are flammable and vapors are explosive.
  - Use only an approved container.
  - Never remove fuel cap or add fuel with engine running. Allow engine to cool before refueling. Do not smoke.
  - Never refuel or drain the machine indoors.
- Check that operator's presence controls, safety switches and shields are attached and functioning properly. Do not operate unless they are functioning properly.

Operation

- Never run an engine in an enclosed area.
- Only operate in good light, keeping away from holes and hidden hazards.
- Be sure all drives are in neutral and parking brake is engaged before starting engine. Only start engine from the operator's position. Use seat belts if provided.
- Slow down and use extra care on hillsides. Be sure to travel in the recommended direction on hillsides. Turf conditions can affect the machine's stability. Use caution while operating near drop-offs.
- Slow down and use caution when making turns and when changing directions on slopes.
- Never raise deck with the blades running.
- Never operate with guards not securely in place. Be sure all interlocks are attached, adjusted properly, and functioning property.
- Do not change the engine governor setting or overspeed the engine.
- Stop on level ground, lower the cutting units, disengage drives, engage parking brake (if provided), shut off engine before leaving the operator's position for any reason.
- Stop equipment and inspect the blades after striking objects or if an abnormal vibration occurs. Make necessary repairs before resuming operations.
- Keep hands and feet away from the cutting units.
- Look behind and down before backing up to be sure of a clear path.
- Never carry passengers and keep pets and bystanders away.
- Slow down and use caution when making turns and crossing roads and sidewalks. Stop blades if not mowing.
- Do not operate the mower under the influence of alcohol or drugs.
- Use care when loading or unloading the machine into a trailer or truck.
- Use care when approaching blind corners, shrubs, trees, or other objects that may obscure vision.

- The operator shall turn on flashing warning lights, if provided, whenever traveling on a public road, except where such use is prohibited by law.

Maintenance and Storage

- Disengage drives, lower the cutting units, move traction pedal to Neutral, set parking brake, stop engine and remove key and disconnect spark plug wire. Wait for all movement to stop before adjusting, cleaning or repairing.
- Clean grass and debris from cutting units, drives, mufflers, and engine to help prevent fires. Clean up oil or fuel spillage.
- Let engine cool before storing and do not store near flame.
- Shut off fuel while storing or transporting. Do not store fuel near flames or drain indoors.
- Park machine on level ground. Never allow untrained personnel to service machine.
- Use jack stands to support components when required.
- Carefully release pressure from components with stored energy.
- Disconnect battery or remove spark plug wire before making any repairs. Disconnect the negative terminal first and the positive last. Reconnect positive first and negative last.
- Use care when checking blades. Wrap the blades or wear gloves, and use caution when servicing them. Only replace blades. Never straighten or weld them.
- Keep hands and feet away from moving parts. If possible, do not make adjustments with the engine running.
- Charge batteries in an open well ventilated area, away from spark and flames. Unplug charger before connecting or disconnecting from battery. Wear protective clothing and use insulated tools.
- Keep all parts in good working condition and all hardware tightened. Replace all worn or damaged decals.

Toro Mower Safety

The following list contains safety information specific to Toro products or other safety information that you must know that is not included in the ANSI standards.

This product is capable of amputating hands and feet and throwing objects. Always follow all safety instructions to avoid serious injury or death.

Use of this product for purposes other than its intended use could prove dangerous to user and bystanders.

Operation

- Know how to stop the machine quickly.
- Always wear substantial shoes. Do not operate the machine while wearing sandals, tennis shoes, or sneakers.
- Wearing safety shoes and long pants is advisable and required by some local ordinances and insurance regulations.
- Fill fuel tank until level is 1 in. (25 mm) below the bottom of the filler neck. Do not overfill.
- Check the safety interlock switches daily for proper operation. Do not rely entirely on safety switches; shut the engine off before getting off of the seat. If a switch should fail, replace the switch before operating the machine. After every two years, replace all interlock switches in the safety system, **regardless** if they are working properly or not.
- Grass deflectors must be installed in the lowest position on side discharge units.
- Pay attention when using the machine. To prevent loss of control:
  - Do not drive close to sand traps, ditches, creeks, or other hazards.
  - Reduce speed when making sharp turns.
  - Avoid sudden stops and starts.
  - Watch for traffic when near or crossing roads. Always yield the right-of-way.
  - For steering control, lower the cutting deck when going down slopes.
- Cut grass slopes carefully. Do not start, stop, or turn suddenly when traveling uphill or downhill.
- Do not touch the engine or muffler while the engine is running or soon after it has stopped because these areas could be hot enough to cause burns.
- If the cutting unit discharge area ever plugs, shut the engine off before removing the obstruction.

Maintenance and Storage

- Make sure all hydraulic line connectors are tight and all hydraulic hoses and lines are in good condition before applying pressure to the system.
- Keep your body and hands away from pin hole leaks or nozzles that eject hydraulic fluid under high pressure. Use paper or cardboard, not your hands, to search for leaks. Hydraulic fluid escaping under pressure can have sufficient force to penetrate the skin and cause serious injury.

- Before disconnecting or performing any work on the hydraulic system, all pressure in the system must be relieved by stopping the engine and lowering the cutting units to the ground.
- If the engine must be running to perform a maintenance adjustment, keep hands, feet, clothing, and any parts of the body away from the cutting units, attachments, and any moving parts.
- Do not overspeed the engine by changing governor settings. To ensure safety and accuracy, have an Authorized Toro Distributor check the maximum engine speed with a tachometer.
- The engine must be shut off before checking the oil or adding oil to the crankcase.
- Frequently check the blade condition and blade mounting bolts to ensure that they are tight.
- Perform only those maintenance procedures described in this manual. If major repairs are ever needed or if assistance is desired, contact an Authorized Toro Distributor.
- Make sure that the mower fuel tank is empty if the machine is to be stored in excess of 30 days. Do not store the mower where gasoline fumes may be ignited by a spark.
- To make sure of optimum performance and continued safety certification of the machine, use only genuine Toro replacement parts and accessories. Replacement parts and accessories made by other manufacturers could be dangerous, and such use could void the product warranty.

Safety and Instruction Decals

Safety decals and instructions are easily visible to the operator and are located near any area of potential danger. Replace any decal that is damaged or lost.

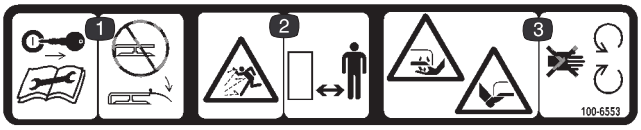

100-6553

1. Remove the ignition key before performing any maintenance. Do not operate the machine without the deflector in place.
2. Thrown object hazard—keep bystanders away.
3. Cutting/dismemberment hazard of hands or feet—stay away from rotating blades and moving parts.

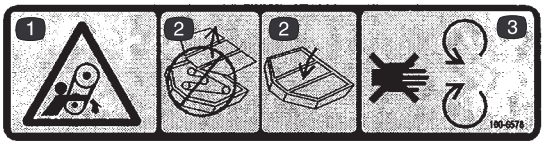

100-6578

1. Warning—hand and arm entanglement.
2. Keep the deck covers in place.
3. Stay away from moving parts.



100-6582

1. Warning—cutting hazard to hands and fingers.

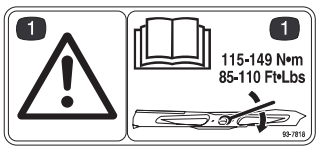

93-7818

1. Warning—read the operator's manual for further information on torquing the blade bolt.

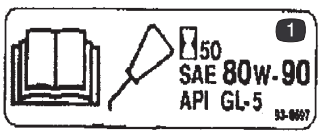

93-6697

1. Read the operator's manual for further information on lubrication.



54-9220



93-6696

1. Warning—the spring is under tension. Read the operator's manual.

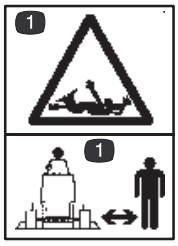

93-7283

1. Entanglement hazard—keep bystanders away.



93-7824

1. Thrown object hazard—keep bystanders away.
2. Thrown object hazard from mower—keep the deflector in place.
3. Cutting/dismemberment hazard of hands or feet—stay away from rotating blades and moving parts.

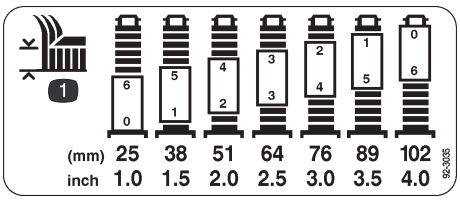

92-3035

1. Height-of-cut

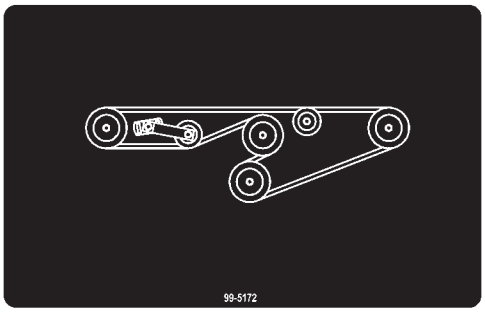

99-5172

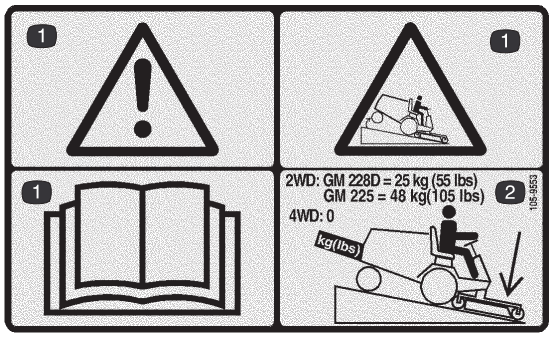

105-9553

1. Warning—read the *Operator's Manual.*
2. Tipping hazard—lower the cutting unit when driving down slopes. Add a 25 kg (55 lb.) rear weight to GM 228D units and a 48 kg (105 lb.) rear weight to GM 225 units.

Specifications

General Specifications

Width of Cut	61-5/8 in. (1.56 m)
Height of Cut	Adjustable from 1 to 4 in. (25 to 102 mm) in 1/2 inch increments
Blade Tip Speed	15,480 ft./min. @ 3250 engine RPM
Cutting Blades	3 heat-treated steel blades, each 3/16 in. (4.8 mm) thick and 24-3/4 in. (55 cm) long
Unit Drive System	PTO driven gear box transmits power through a “AA” section belts to all blade spindles.
Castor Wheels	8 in. (203 mm) diameter pneumatic wheels with greaseable roller bearings (inflated to 35–50 psi [241–345 kPa])

Note: Specifications and design subject to change without notice.

Optional Equipment

Leaf Mulcher	Model No. 30792
62″ Front Baffle Kit (for dry conditions)	Part No. 99-5151
Leaf Mulcher Discharge Plate	Part No. 57-0700
High Lift Blades	Part No. 77-6710
Atomic Blades	Part No. 104–1303
Recycler Kit	Part No. 100–9600
Blade and Belt Kit	Part No. 95-3071
Spindle Assembly	Part No. 95-3079
Grass Collection System	
Blower Kit and	Model No. 30506
Hopper Kit **or**	Model No. 30504[1]
Dump Kit	Model No. 30505[2]
Phenolic Castor Wheels	Part No. 27-1050
use with Spanner **or**	Part No. 69-8980
Castor Fork and	Part No. 40-0370
3/4 in. Bolts	Part No. 328-9

[1]Only fits Model No. 30223, 30230, 30225, 30241 and 30224

[2]Only fits Model No. 30223, 30224, 30225, 30230, 30243, 30241 and 30224

Setup

Loose Parts

Note: Use this chart as a checklist to ensure that all parts have been received. Without these parts, total setup cannot be completed.

Description	Qty.	Use
Front castor wheel assembly	2	Installing the castor wheel assemblies
Rear castor wheel assembly	2	
Right-hand lift arm	1	Mount to traction unit pivot brackets
Left-hand lift arm	1	
Pivot pin assembly	2	
Cotter pin, 5/32 in. x 1-3/4 in.	2	
Capscrew, 7/16 x 3 in.	4	Connecting the lift arms to the cutting unit
Flange nut, 7/16 in.	4	
Mounting bracket	2	Mounting the weight transfer kit
Lock pin assembly	4	
Self-tapping screw	4	
Spring cover assembly	2	
Clevis pin	2	
Hairpin cotter	2	
Spring end—top	2	
Heavy extension spring (left-hand side)	1	
Light extension spring (right-hand side)	1	
Lower spring end	2	
Knee link	2	
Capscrew, 3/8 x 1 in.	4	
Shoulder bolt	4	
Flat washer	4	
Locknut, 3/8 in.	4	
Decal	1	Replace on CE model.
Parts Catalog	1	
Operator’s Manual	1	Read before operating the machine.
Registration card	1	Fill out and return to Toro.

Note: Determine the left and right sides of the machine from the normal operating position.

Danger

If the engine is started and the PTO shaft is allowed to rotate, serious injury could result.

Do not start the engine and engage the PTO lever when the PTO shaft is not connected to the gear box on the cutting unit.

Installing the Castor Wheel Assemblies

The thrust washers, spacers, and tensioning caps have been installed on the castor wheel spindles for shipping.

1. Remove the tensioning caps from the spindle shafts and slide off the spacers and thrust washers (Fig. 1 and 2).

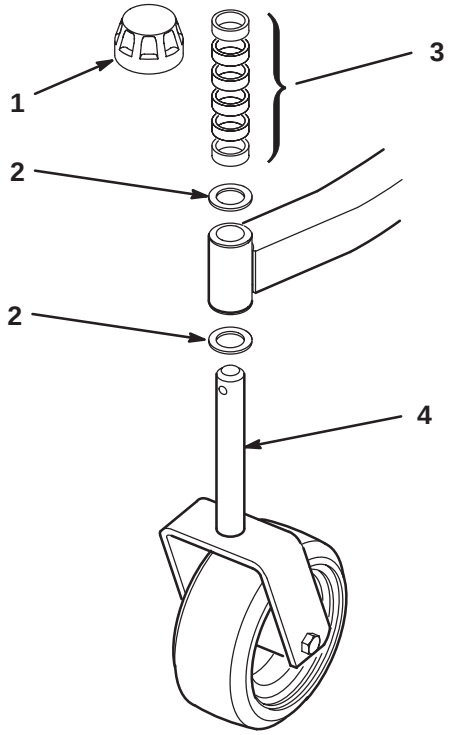

Figure 1

1. Tensioning cap
2. Thrust washers
3. Spacers
4. Front castor spindle

2. Slide the spacers onto the castor spindle to get the desired height-of-cut; refer to the Height-of-Cut Chart on page 13. Slide a thrust washer onto the spindle, push the round castor spindle through the front castor arm, and the hex castor spindle through the rear castor arm. Install another thrust washer and the remaining spacers onto the spindle and install the tensioning cap to secure the assembly.

Important The thrust washers, not the spacers, must contact the top and bottom of the castor arm.

3. Ensure that all four castor wheels are set at the same height-of-cut and roll the cutting unit off of the pallet.

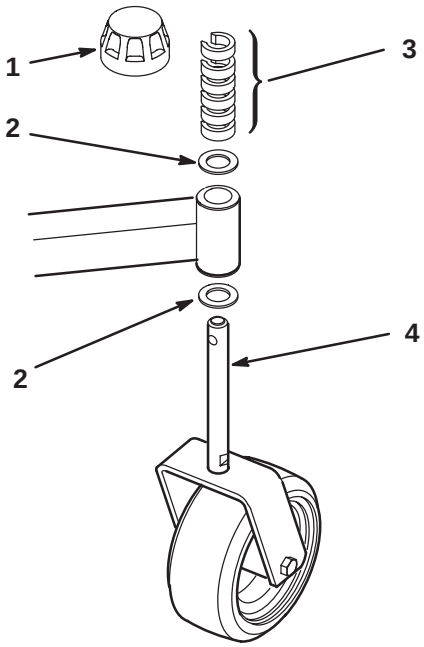

Figure 2

1. Tensioning cap
2. Thrust washers
3. Spacers
4. Rear castor spindle

Installing the Lift Arms to the Traction Unit

1. On one side of the traction unit, loosen (do not remove) the wheel nuts securing the wheel and tire assembly to the front wheel studs.
2. Jack up the machine until the front wheel is off of the floor. Use jack stands or block the machine to prevent it from accidentally falling.
3. Remove the wheel nuts and slide the wheel and tire assembly off of the studs.
4. Mount a lift arm to the pivot bracket with a pivot pin and cotter pin (5/32 x 1-3/4 in.) (Fig. 3). Mount the lift arm with the ball joint end positioned outward.
5. Mount the rear of the lift arm to the lift cylinder with a pivot pin and 2 cotter pins (supplied with the traction unit).

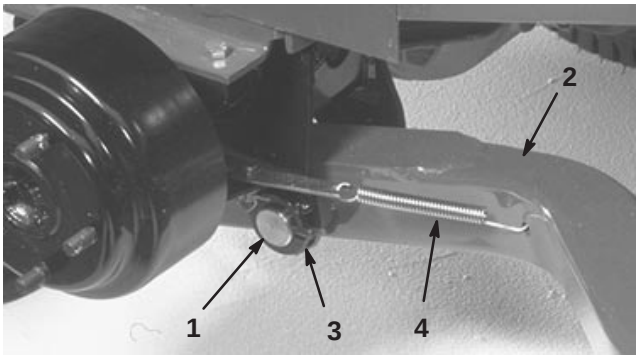

Figure 3

1. Pivot pin
2. Lift arm
3. Lift arm pivot bracket
4. Brake return spring

6. Hook the brake return spring to the hole in the lift arm (Fig. 3).

7. Repeat the procedure on the opposite side of the machine.

Connecting the Lift Arms to the Cutting Unit

1. Move the cutting unit into position in front of the traction unit.

2. Measure the distance from the end of each lift arm to the center of the ball joint (grease fitting). The distance should be 2-1/4 in. (57 mm) (Fig. 4). If distance is not 2-1/4 in. (57 mm), loosen the jam nut securing the ball joint to the lift arm and rotate the ball joint in or out until the distance is attained. Do not tighten the jam nuts at this time.

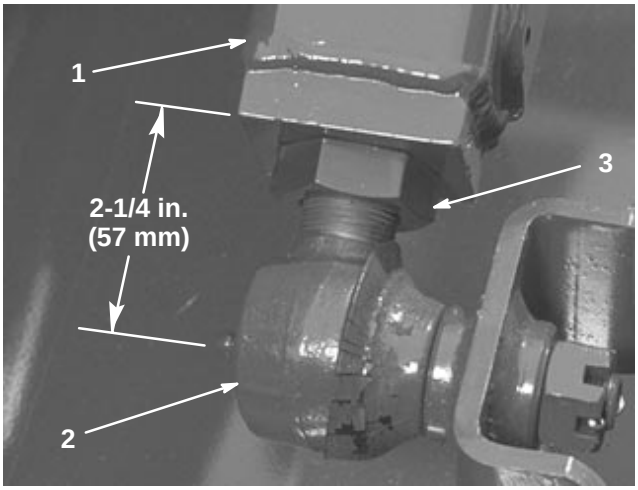

Figure 4

1. Lift arm
2. Ball joint
3. Jam nut

3. Move the lift lever to the Float position. Push the lift arms down until the holes in the ball joint mounts line up with the holes in the castor arms.

4. Secure the ball joint mounts to each castor arm with 2 capscrews (7/16 x 3 in.) and flange nuts (7/16 in.) (Fig. 5).

Note: The ball joint mount should be above the castor arm when it is assembled.

5. Tighten the large jam nut securing the ball joint to the lift arm (Fig. 5). When tightening the jam nut, hold the ball joint straight to permit proper oscillation during raising and lowering of the cutting unit.

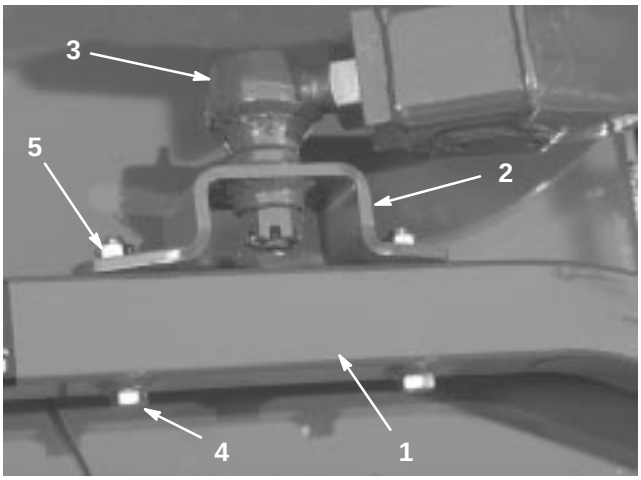

Figure 5

1. Castor arm
2. Ball joint mount
3. Ball joint
4. Capscrew
5. Flange nut

Mounting the PTO Shaft Guard and Connecting the PTO Shaft to the Cutting Unit Gear Box

1. Remove the 2 capscrews and lock washers securing the PTO guard mounting brackets to the gearbox (Fig. 6). Retain the fasteners for future installation.
2. Slide the PTO shaft guard onto the PTO shaft, positioning the guard as shown in Figure 6.

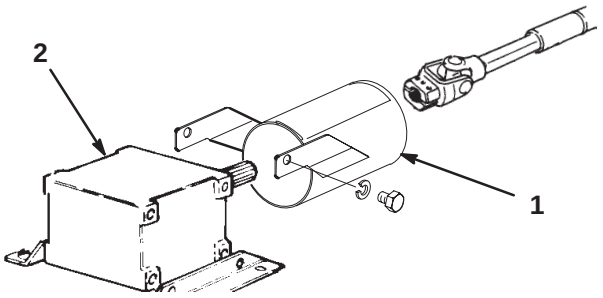

Figure 6

1. PTO guard
2. Gear box

3. Slide the male PTO shaft into the female PTO shaft. Align the mounting holes in the gear case input shaft with the holes in the PTO shaft and slide them together.
4. Secure them with a roll pin.
5. Tighten the capscrews and nuts.
6. Attach the PTO shaft guard to the gearbox with the 2 capscrews and lock washers previously removed.

Installing the Weight Transfer Kit

1. Fully raise the cutting deck, set the parking brake, stop the engine, and remove the ignition key.
2. Place blocks under the cutting deck to prevent it from falling during assembly.

Note: The mounting brackets for the weight transfer kit must be installed in different locations depending on the cutting deck. Refer to Figure 7 for mounting location.

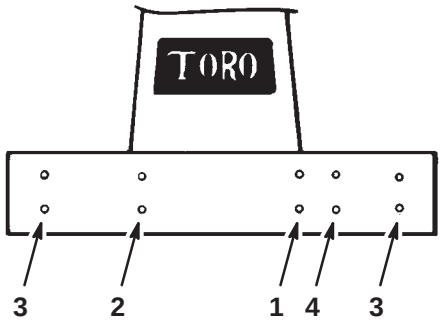

Figure 7

1. 52″ side discharge deck
2. 52″ deck w/bagger
3. 62″ and 72″ decks
4. 52″ rear discharge deck

3. To install the mounting brackets, insert 2 flange head capscrews (3/8 x 1 in.) through the slotted bracket holes. Thread the screws into the captivated frame nuts and torque them to 45–50 ft.-lb. (61–68 N·m) (Fig. 8).

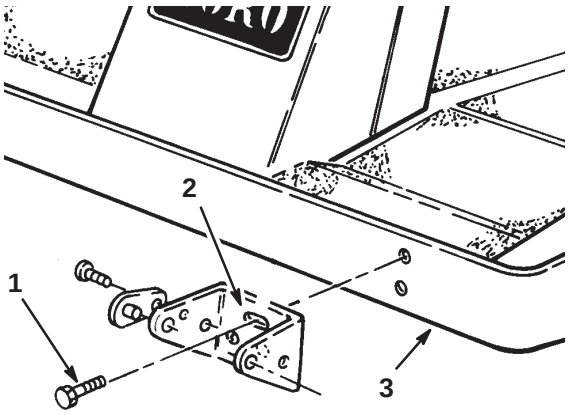

Figure 8

1. Flange head capscrew
2. Slotted hole
3. Frame

4. Thread the top extension spring coil into the top spring end holes and the bottom extension spring coil into the bottom spring end holes (Fig. 9).
5. Mount the knee link to the lower spring end with the wide part of the knee link pointing forward and the spring end stop pointing forward. Secure the knee link to the outer side of the spring end (Fig. 11) with a shoulder bolt, washer, and locknut (Fig. 9 and 10).

Important The knee link must be assembled pointing in the proper direction or the spring will not pivot correctly when the deck is raised.

6. Mount the bottom of the knee link to the deck bracket with a shoulder bolt and locknut. Use the heavy rate extension on the left-hand side (large diameter spring wire) and the light rate extension spring on the right, discharge side (small diameter spring wire).

7. Align the slotted holes in the spring cover (slot toward the bottom) with the mounting bracket holes. Insert the lock pin assemblies into the bracket holes and secure each to the bracket with the self-tapping screws (Fig. 9). Torque the screws to 20 ft.-lb. (27 N·m).

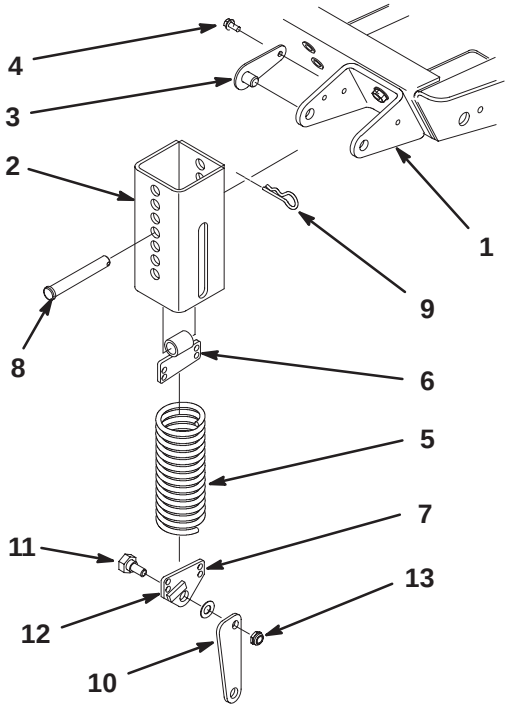

Figure 9

1. Mounting bracket
2. Spring cover
3. Lock pin assembly
4. Self-tapping screw
5. Extension spring
6. Top spring end
7. Bottom spring end
8. Clevis pin
9. Hairpin cotter
10. Knee link
11. Shoulder bolt
12. Spring end stop
13. Locknut (2)

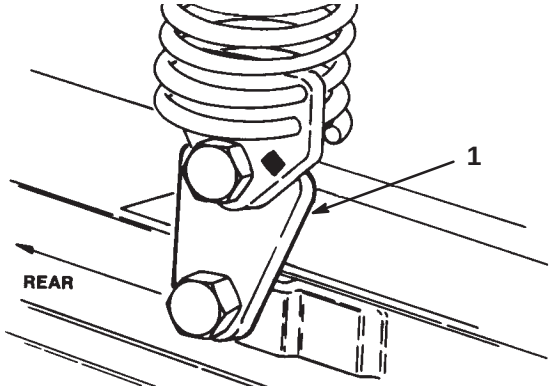

Figure 10

1. Wide part of knee link

8. From the bottom, insert the spring and top spring end into the spring cover. Select a hole that matches the cutter deck height-of-cut setting; i.e., the top cover hole matches the highest height setting, the bottom cover hole the lowest, etc. Align the top spring end hole with the selected spring cover holes and insert the clevis pin to secure the spring inside the cover (Fig. 9). Secure the clevis pin with a hairpin cotter.

9. Remove the blocks from under the cutting unit. Make the final counterbalance adjustments under actual cutting conditions; refer to Adjusting the Tension Spring, page 16.

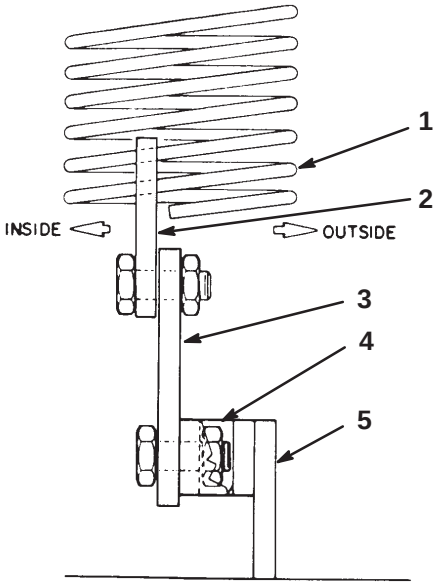

Figure 11

1. Weight transfer spring
2. Spring end plate
3. Knee link bracket
4. Deck bracket
5. Deck frame

Installing Rear Weight

Two Wheel Drive Groundsmaster 1000 and 200 Series traction units comply with the ANSI B71.4-1999 Standard when equipped with rear weight. Refer to the chart in the traction unit Operator's Manual to determine the combinations of weight required. Order the parts from your local Authorized Toro Distributor.

Four Wheel Drive Groundsmaster 200 Series traction units do not need additional rear weight to comply with the ANSI B71.4-1999 Standard.

Before Operating

Adjusting the Height-of-Cut

The height-of-cut is adjustable from 1 to 4 inches (25 to 102 mm) in 1/2 inch (13 mm) increments, by adding or removing an equal number of spacers on the front and rear castor forks. The height-of-cut chart below gives the combinations of spacers to use for all height-of-cut settings.

Height-of-Cut Setting (inches)	Spacers Below Castor Arm	
	Front	Rear
1 (25 mm)	0	0
1-1/2 (38 mm)	1	1
2 (51 mm)	2	2
2-1/2 (64 mm)	3	3
3 (76 mm)	4	4
3-1/2 (89 mm)	5	5
4 (102 mm)	6	6

Start the engine and raise the cutting unit so that the height-of-cut can be changed. Stop the engine after the cutting unit is raised.

Front Castor Wheels

1. Remove the tensioning cap from the spindle shaft and slide the spindle out of the front castor arm (Fig. 12). Remove the washer from the spindle shaft. Slide the spacers onto the spindle shaft to get the desired height-of-cut, then slide the washer onto the shaft.
2. Push the castor spindle through the front castor arm, install the other thrust washer and remaining spacers onto the spindle, and install the tensioning cap to secure the assembly.

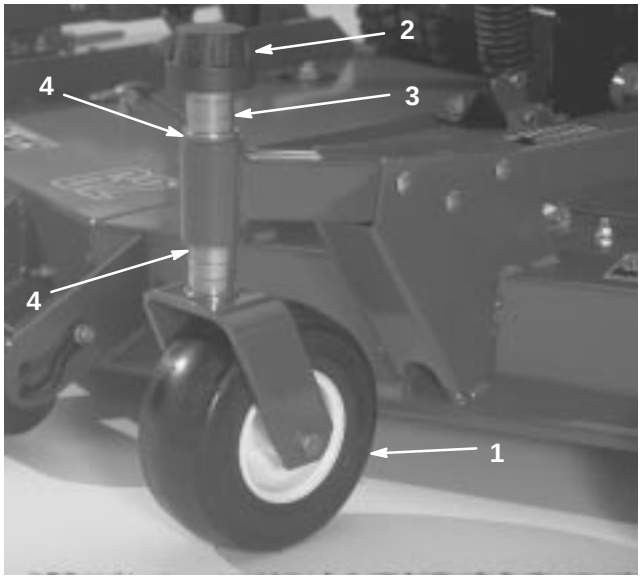

Figure 12

1. Front castor wheel
2. Tensioning cap
3. Spacers
4. Thrust washers

Rear Castor Wheels

1. Remove the tensioning cap from the spindle shaft (Fig. 13).

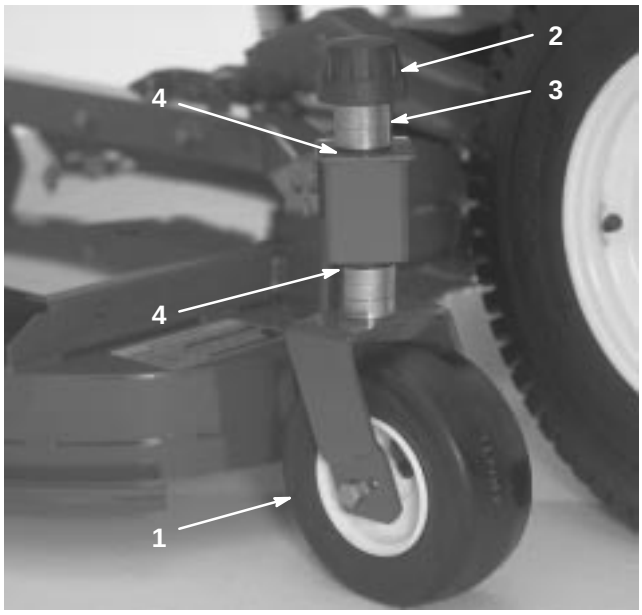

Figure 13

1. Rear castor wheel
2. Tensioning cap
3. Spacers
4. Thrust washers

Note: The rear castor fork assembly does not need to be removed from the castor arm to change the height-of-cut.

2. Remove or add ”C” shaped spacers at the narrow portion of the spindle shaft, below the castor arm, to get the desired height-of-cut. Make sure that the thrust washers, not the spacers, contact the top and bottom of the castor arm.
3. Install the tensioning cap to secure the assembly.
4. Ensure that all four castor wheels are set at the same height-of-cut.

Adjusting the Rollers and Gage Wheel

Note: If the cutting unit is to be used in the 1 in. (25 mm) or 1-1/2 in. (38 mm) height-of-cut setting, the cutting unit rollers must be repositioned in the top bracket holes.

Adjusting the Front Roller

1. Remove the capscrew and nut securing the roller shaft to the cutting unit bracket (Fig. 14).
2. Slide the shaft out of the lower bracket holes, align the roller with the top holes, and install the shaft.
3. Secure the roller shaft to the cutting unit bracket with the capscrew and nut.

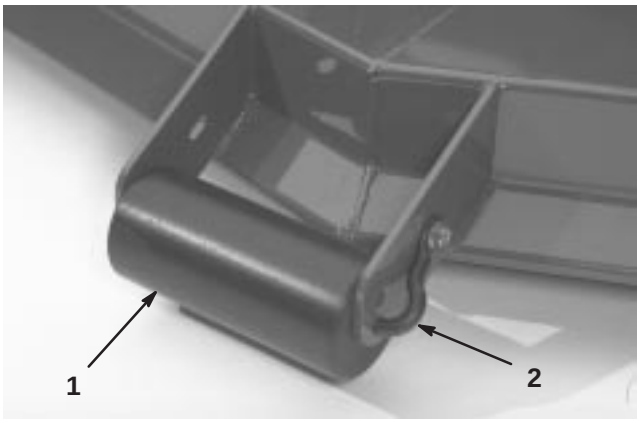

Figure 14

1. External roller
2. Roller shaft

Adjusting the Front Gage Wheel

1. Remove the capscrew and nut securing the gage wheel to the cutting unit brackets (Fig. 15).
2. Align the roller and spacer with the top holes in the brackets and secure them with the capscrew and nut.

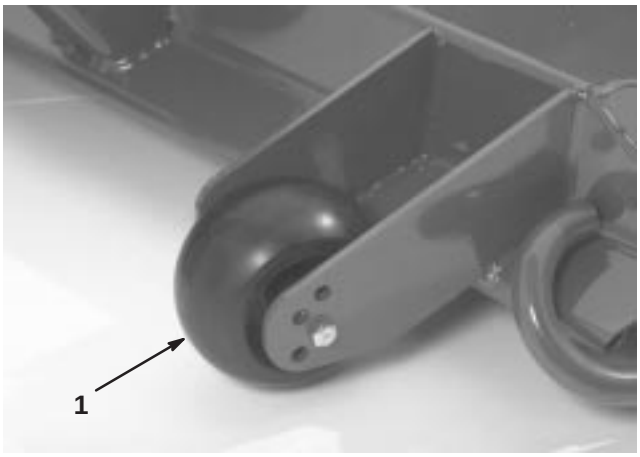

Figure 15

1. Gage wheel

Adjusting the Rear (Internal) Rollers

1. Remove the cotter pins securing the roller shafts to the brackets on the underside of the deck (Fig. 16).
2. Slide the shafts out of the lower bracket holes, align the rollers with the top holes, and install the shafts.
3. Install the cotter pins to secure the assemblies.

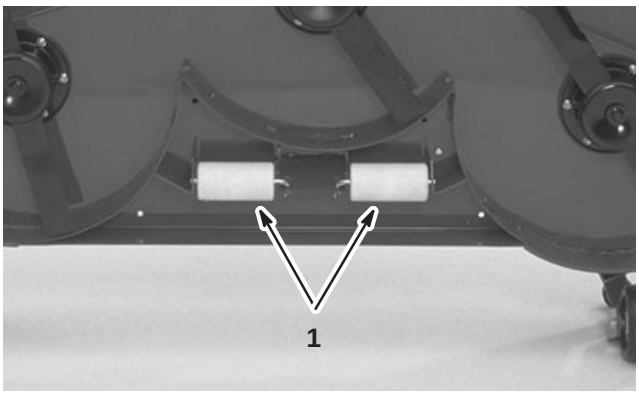

Figure 16

1. Internal rollers

Checking the Lubricant in the Gear Box

1. Position the machine and cutting unit on a level surface.
2. Remove the fill/check plug from the side of the gear box (Fig. 17) and make sure that the lubricant is up to the bottom of the hole. If the lubricant level is low, add enough lubricant to bring it up to the bottom of the hole.

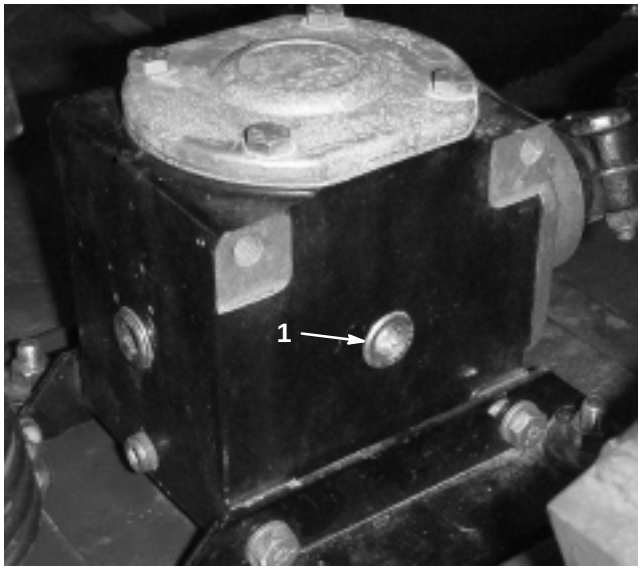

Figure 17

1. Fill/check plug

Greasing the Cutting Unit

Before the cutting unit is operated, it must be greased to ensure proper lubricating characteristics; refer to Greasing the Bearings, Bushings, and Gear Box, page 16. Failure to properly grease the cutting unit will result in premature failure of critical parts.

Operation

Note: Determine the left and right sides of the machine from the normal operating position.

Using the Grass Deflector

Danger

Without the grass deflector mounted in place, you and others are exposed to blade contact and thrown debris. Contact with the rotating mower blade(s) and thrown debris will cause injury or death.

- **Never remove the grass deflector from the mower because the grass deflector routes material down toward the turf. If the grass deflector is ever damaged, replace it immediately.**
- **Never put your hands or feet under the mower.**
- **Never operate the mower with the deflector removed from the cutting unit or tied/blocked in a raised position.**

Note: The deflector is spring loaded into its downward normal operating position (Fig. 18), but the operator can temporarily swing it out of the way to facilitate loading in a trailer or when otherwise necessary.

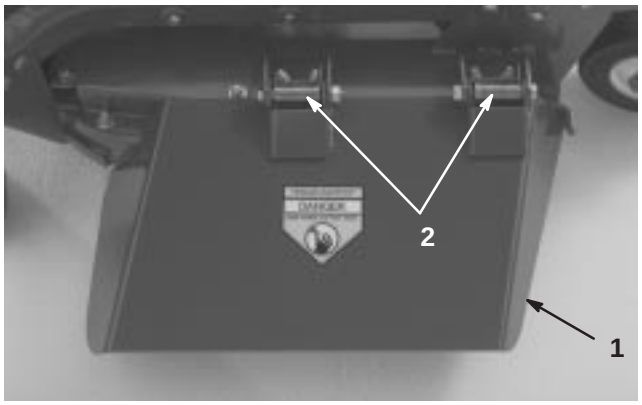

Figure 18

1. Grass deflector
2. Springs

Adjusting the Tension Spring

For best performance, the cutting unit bounce on uneven turf is minimal and it does not ride heavily over flat terrain. If scalping occurs or the cut is uneven from side to side, there may too much weight on the deck and weight may have to be transferred to the traction unit: i.e. increased spring tension.

By contrast, if too much weight is transferred to the traction unit, the deck will bounce excessively and the cut will be uneven. If the cutting unit does not perform properly, adjust the tension spring as follows:

1. Stop the machine on a level surface, set the parking brake, fully raise the cutting unit, turn the ignition key to Off, and remove the key.
2. Remove the hairpin cotter from the clevis pin securing the spring end to the spring cover and remove the clevis pin. Align the top spring end hole with the new hole selected in the spring cover, insert the clevis pin, and secure it with the hairpin cotter.
3. Resume operations. If further adjustments are required, repeat the procedure.

Caution

The counterbalance spring is in tension when the deck is in the lowered position.

Always raise the deck before adjusting or removing the spring.

Maintenance

Note: Determine the left and right sides of the machine from the normal operating position.

Greasing the Bearings, Bushings, and Gear Box

The cutting unit must be lubricated regularly. If the machine is operated under normal conditions, lubricate the castor bearings and bushings with No. 2 general purpose lithium base grease or molybdenum base grease after every 8 hours of operation or daily, whichever comes first.

1. Lubricate the following areas:
   - front castor spindle bushings (Fig. 19)
   - front and rear castor wheel bearings (Fig. 19)
   - right and left lift arm pivot pins (Fig. 20)
   - blade spindle bearings (Fig. 21)
   - right and left push arm ball joints (Fig. 21)

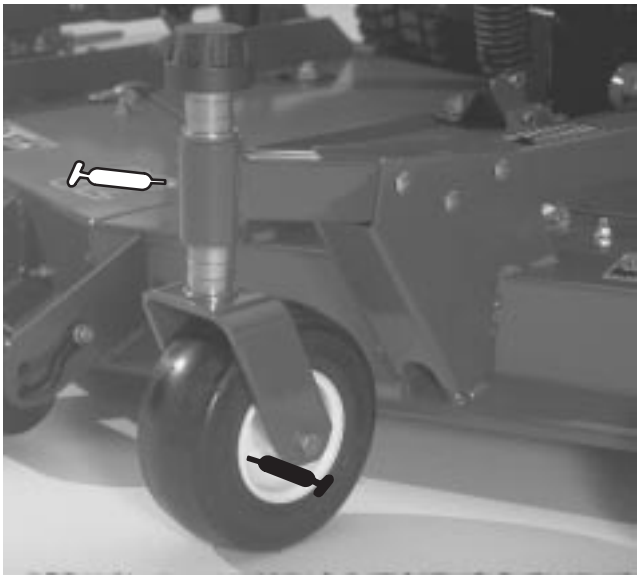

Figure 19

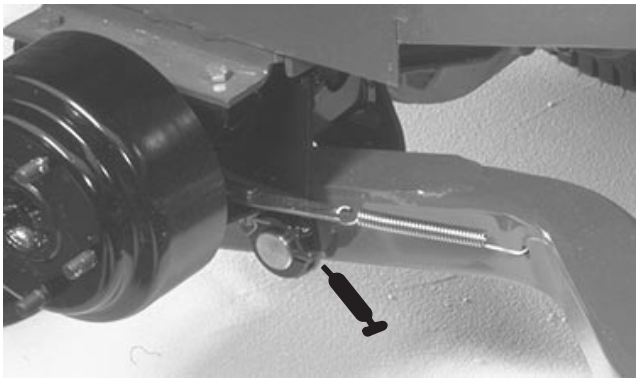

Figure 20

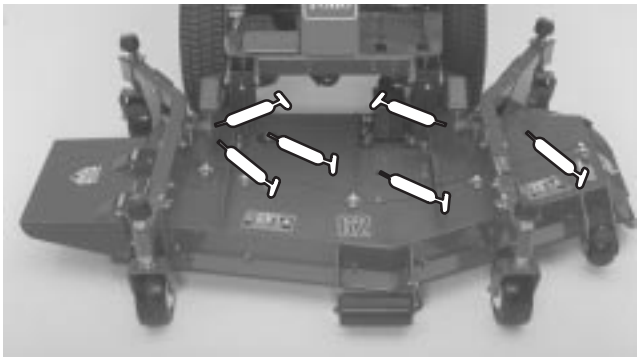

Figure 21

2. Position the machine and cutting unit on a level surface and lower the cutting unit. Remove the fill/check plug from the side of the gear box (Fig. 22) and make sure that the lubricant is up to the bottom of the hole. If the lubricant level is low, add SAE 80–90 wt. gear lube until the level is up to the bottom of the hole.

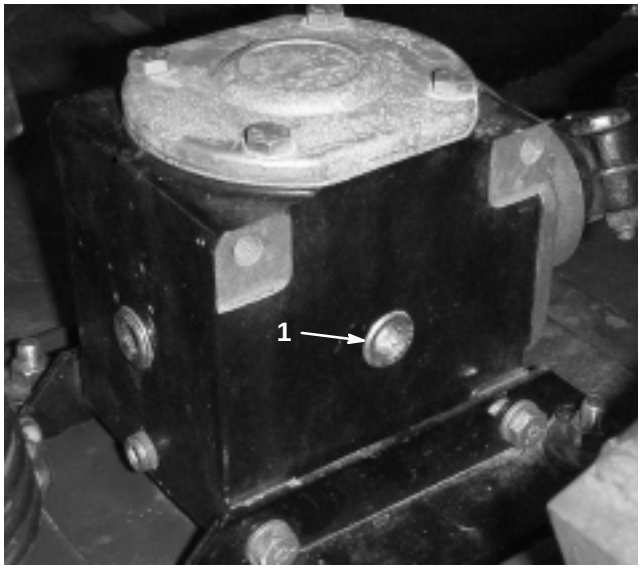

Figure 22

1. Fill/check plug

Separating the Cutting Unit from the Traction Unit

1. Position the machine on a level surface, raise the cutting unit, engage the parking brake, put the traction pedal in neutral, the PTO lever in the Off position, shut the engine off, and remove the ignition key.

Caution

The counterbalance spring is in tension when the deck is in the lowered position.

Always raise the deck before adjusting or removing the spring.

2. Disconnect the counterbalance from the traction unit, remove the lock pins from the brackets, separate the spring tension assemblies from the brackets, and lay them down on the deck. Loosely secure the lock pins to the brackets to prevent losing them (Fig. 23).

3. Position the machine on a level surface, lower the cutting unit to the floor, move the lift lever to the float position, shut the engine off, and engage the parking brake.

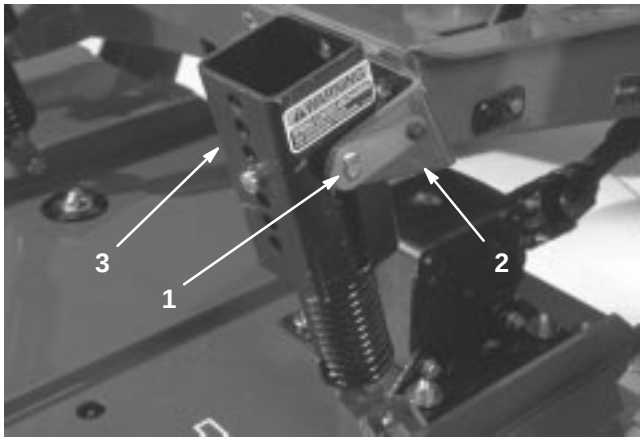

Figure 23

1. Lock pin
2. Bracket
3. Spring tension assembly

4. Remove the capscrews and locknuts securing the ball joint mounts to the castor arms on the cutting unit (Fig. 24).

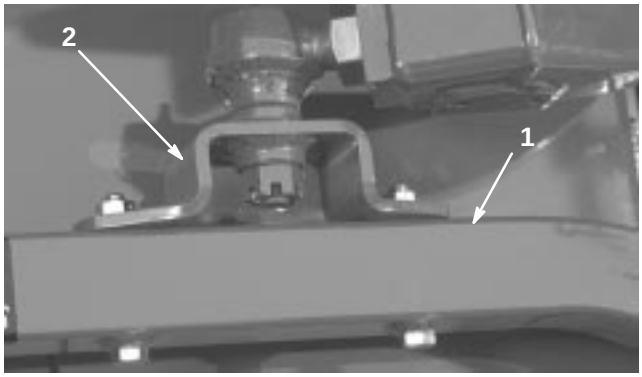

Figure 24

1. Castor arm
2. Ball joint mount

5. Roll the cutting unit away from the traction unit, separating the male and female sections of the PTO shaft (Fig. 25).

Danger

If the engine is started and the PTO shaft is allowed to rotate, serious injury could result.

Do not start the engine and engage the PTO lever when the PTO shaft is not connected to the gear box on the cutting unit.

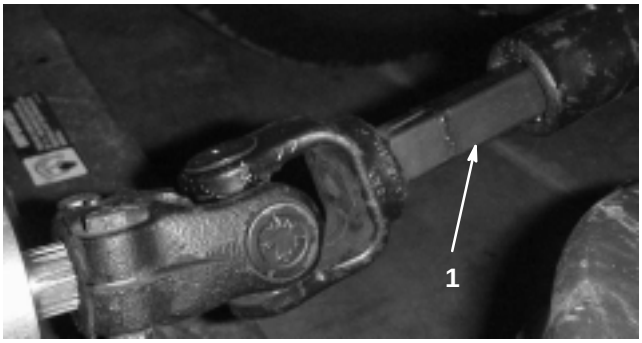

Figure 25

1. PTO shaft

Mounting the Cutting Unit to the Traction Unit

1. Position the machine on a level surface and shut the engine off.
2. Move the cutting unit into position in front of the traction unit.
3. Slide the male PTO shaft into the female PTO shaft. (Fig. 25)
4. Move the lift lever to the Float position. Push the lift arms down until the holes in the ball joint mounts line up with the holes in the castor arms (Fig. 24).
5. Secure the ball joint mounts to the castor arms with the capscrews and flange nuts.
6. Raise the cutting unit and place blocks under it to prevent it from falling during assembly.
7. Connect the counterbalance to the traction unit brackets with lock pins (Fig. 23).
8. Remove the blocks from under the cutting unit. Make the final counterbalance adjustments under actual cutting conditions; refer to Adjusting the Tension Spring, page 16.

Servicing the Castor Arm Bushings

1. Raise the cutting unit so that the wheels are off of the floor and block it so that it cannot accidentally fall.
2. Remove the tensioning cap, spacer(s), and thrust washer from the top of the castor spindle.
3. Pull the castor spindle out of the mounting tube. Allow the thrust washer and spacer(s) to remain on the bottom of the spindle.
4. Insert a pin punch into the top or bottom of the mounting tube and drive the bushing out of the tube. Also drive the other bushing out of the tube (Fig. 26). Clean the inside of the tubes to remove dirt.

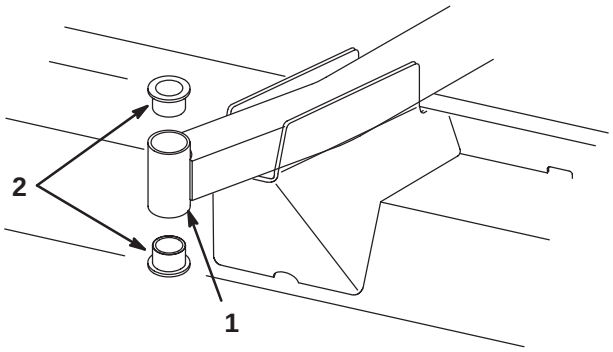

Figure 26

1. Front castor arm tube
2. Bushings

5. Apply grease to the inside and outside of the new bushings. Using a hammer and flat plate, drive the bushings into the mounting tube.
6. Inspect the castor spindle for wear and replace it if it is damaged.
7. Push the castor spindle through the bushings and mounting tube. Slide the thrust washer and spacer(s) onto the spindle. Install the tensioning cap on the castor spindle to retain all of the parts in place.

Servicing the Castor Wheels and Bearings

The castor wheel rotates on a high-quality roller bearing and is supported by a spanner bushing. Even after many hours of use, provided that the bearing was kept well lubricated, bearing wear will be minimal. However, failure to keep the bearing lubricated will cause rapid wear. A wobbly castor wheel usually indicates a worn bearing.

1. Remove the locknut from the capscrew holding the castor wheel assembly between the castor fork (Fig. 27). Grasp the castor wheel and slide the capscrew out of the fork.
2. Pull the spanner bushing out of the wheel hub (Fig. 27).
3. Remove the bushing from the wheel hub and allow the bearing to fall out. Remove the bushing from the opposite side of the wheel hub.
4. Check the bearing, spanner, and inside of the wheel hub for wear. Replace damaged parts.
5. To assemble the castor wheel, push the bushing into the wheel hub. Slide the bearing into the wheel hub. Push the other bushing into the open end of the wheel hub to captivate the bearing inside the wheel hub (Fig. 27).

6. Carefully slide the spanner through the bushings and the wheel hub.

7. Install the castor wheel assembly between the castor fork and secure it in place with the capscrew, washers, and locknut.

8. Lubricate the castor wheel bearing through the grease fitting, using No. 2 general purpose lithium base grease.

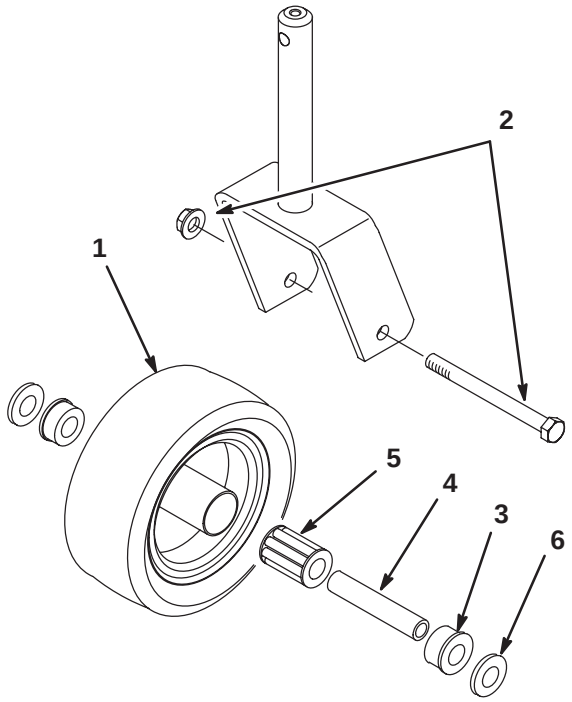

Figure 27

1. Castor wheel
2. Capscrew and locknut
3. Bushing (2)
4. Spanner bushing
5. Roller bearing
6. Washer (2)

Checking for a Bent Blade

1. Position the machine on a level surface, raise the cutting unit, engage the parking brake, put the traction pedal in neutral, the PTO lever in the Off position, shut the engine Off, remove the ignition key, and disconnect the wires from the spark plugs. Block the cutting unit to prevent it from accidentally falling.

2. Rotate the blade until the ends face forward and backward. Measure from the inside of the cutting unit to the cutting edge at the front of the blade (Fig. 28), and remember this dimension.



Figure 28

3. Rotate the opposite end of the blade forward. Measure between the cutting unit and cutting edge of the blade at the same position as in step 2. The difference between the dimensions obtained in steps 2 and 3 must not exceed 1/8 in. (3 mm). If the dimension exceeds 1/8 in. (3 mm), replace the blade because it is bent; refer to Removing the Cutting Blade, page 19.

Removing the Cutting Blade

The blade must be replaced if a solid object is hit, or the blade is out-of-balance, worn, or bent. Always use genuine Toro replacement blades to ensure safety and optimum performance. Never use blades made by other manufacturers because they could be dangerous.

Danger

A worn or damaged blade can break, and a piece of the blade could be thrown into the operator's or bystander's area, resulting in serious personal injury or death.

- **Inspect the blade periodically for wear or damage.**
- **Do not try to straighten a blade that is bent.**
- **Never weld a broken or cracked blade.**
- **Replace a worn or damaged blade with a new Toro blade to ensure continued safety certification of the product.**

1. Position the machine on a level surface, raise the cutting unit, engage the parking brake, put the traction pedal in neutral, the PTO lever in the Off position, shut the engine off, remove the ignition key, and disconnect the wires from the spark plugs. Block the cutting unit to prevent it from accidentally falling.

2. Grasp the end of the blade using a rag or thickly padded glove. Remove the blade bolt, anti-scalp cup, and blade from the spindle shaft (Fig. 29).

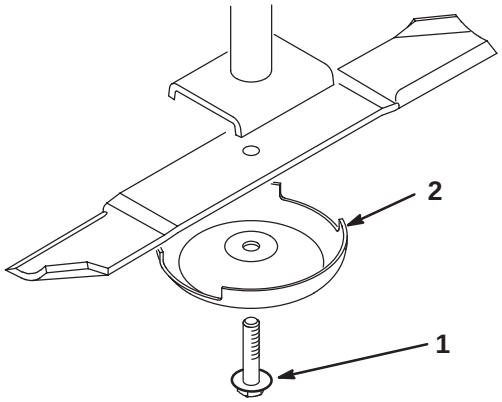

Figure 29

1. Blade bolt
2. Anti-scalp cup

3. Install the blade—sail facing toward the cutting unit—with the anti-scalp cup, and blade bolt. Tighten the blade bolt to 85–110 ft.-lb. (115–149 N·m).

Inspecting and Sharpening the Blade

Two areas must be considered when checking and servicing the cutting blade: the sail and the cutting edge. Both cutting edges and the sail, which is the turned up portion opposite the cutting edge, contribute to a good quality-of-cut. The sail is important because it pulls grass up straight, thereby producing an even cut. However, the sail will gradually wear down during operation, and this condition is normal. As the sail wears down, the quality-of-cut will degrade somewhat, although the cutting edges are sharp. The cutting edge of the blade must be sharp so that the grass is cut rather than torn. A dull cutting edge is evident when the tips of the grass appear brown and shredded. Sharpen the cutting edges to correct this condition.

1. Position the machine on a level surface, raise the cutting unit, engage the parking brake, put the traction pedal in neutral, the PTO lever in the Off position, shut the engine off, remove the ignition key, and disconnect the wires from the spark plugs. Block the cutting unit to prevent it from accidentally falling.

2. Examine the cutting ends of the blade carefully, especially where the flat and curved parts of the blade meet (Fig. 30-A). Since sand and abrasive material can wear away the metal that connects the flat and curved parts of the blade, check the blade before using the machine. If wear is noticed (Fig. 30-B), replace the blade; refer to Removing the Cutting Blade, page 19.

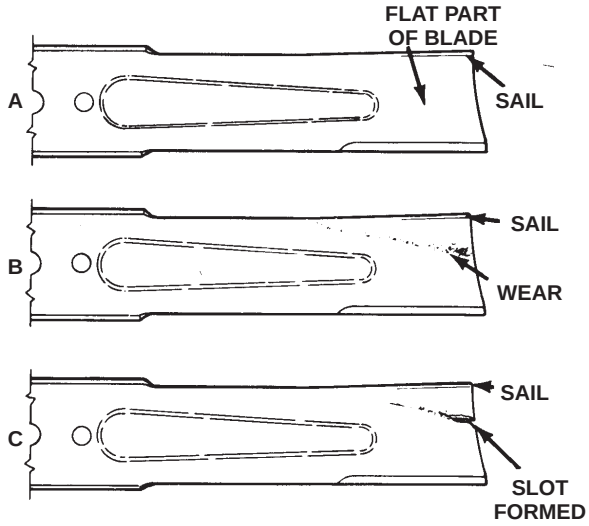

Figure 30

3. Examine the cutting edges of all blades. Sharpen the cutting edges if they are dull or nicked. Sharpen only the top side of the cutting edge and maintain the original cutting angle to ensure sharpness (Fig. 31). The blade will remain balanced if the same amount of metal is removed from both cutting edges.

Warning

If the blade is allowed to wear, a slot will form between the sail and flat part of the blade (Fig. 30-C). Eventually, a piece of the blade may break off and be thrown from under the housing, possibly resulting in serious injury to yourself or bystanders.

- **Inspect the blade periodically for wear or damage.**
- **Replace a worn or damaged blade with a new Toro blade to ensure continued safety certification of the product.**

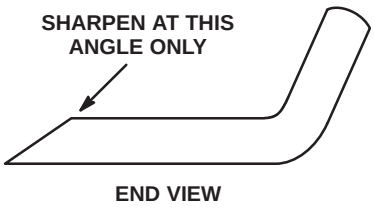

Figure 31

Note: Remove the blades and sharpen them on a grinder; refer to Removing the Cutting Blades, page 19, steps 1 and 2. After sharpening the cutting edges, install the blade

with the anti-scalp cup and blade bolt. The blade sails must be on top of the blade. Tighten the blade bolt to 85–110 ft.-lb. (115–149 N·m).

Checking and Correcting Mismatch of Blades

If one cutting blade cuts lower than the others, correct them as follows:

1. Lower the cutting unit onto a level surface, engage the parking brake, put the traction pedal in neutral, the PTO lever in the Off position, shut the engine off, remove the ignition key, and disconnect the wires from the spark plugs. Make sure that the tire pressure is equal on all tires.
2. Raise the height-of-cut to the 4 in. (102 mm) position; refer to Adjusting the Height-of-Cut, page 13.
3. Rotate the blades so that the tips line up with one another. The tips of the adjacent blades must be within 1/8 in. (3 mm) of each other. If the tips are not within 1/8 in. (3 mm) of each other, proceed to step 9 and add shims between the spindle housing and bottom of the cutting unit.
4. Check to make sure that the front height-of-cut pins are resting properly on the frame cushions. If the pins are not resting properly, place a shim or shims under the cushion to raise it for proper alignment.
5. Position all 3 blades in the “A” position (Fig. 32) and measure from the level surface to the bottom of the tip end of each blade (Fig. 33).

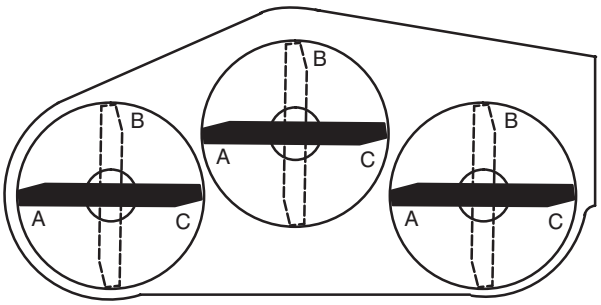

Figure 32

6. Note the measurement attained at “A”, rotate the blades to the “B” position (Fig. 32), measure the distance of all of the blades to the level surface, and note the dimensions (Fig. 33).

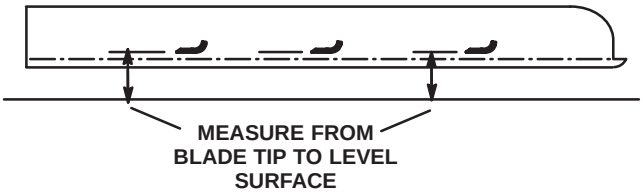

Figure 33

7. Rotate the blades to the “C” position, measure, and note the distance measured (Fig. 32 and 33).
8. Compare the measurements at various positions. All dimensions must be equal within 1/4 in. (6 mm) from any 2 adjacent blades. The difference between the dimensions of all 3 blades must not exceed 3/8 in. (10 mm). If the difference exceeds specifications, proceed to step 9.
9. Remove the capscrews, flat washers, and locknuts from the outer spindle in the area where the shims must be added. To raise or lower the blade, add a shim, Part No. 3256-24, between the spindle housing and bottom of the cutting unit. Continue checking the alignment of the blades and adding shims until the tips of the blades are within the required dimension.

Replacing the Grass Deflector

1. Position the machine on a level surface, raise the cutting unit, engage the parking brake, put the traction pedal in neutral, the PTO lever in the Off position, shut the engine off, and remove the ignition key. Block the cutting unit to prevent it from accidentally falling.
2. Remove the 2 capscrews, locknuts, and springs securing the deflector mounts to the pivot brackets (Fig. 34).

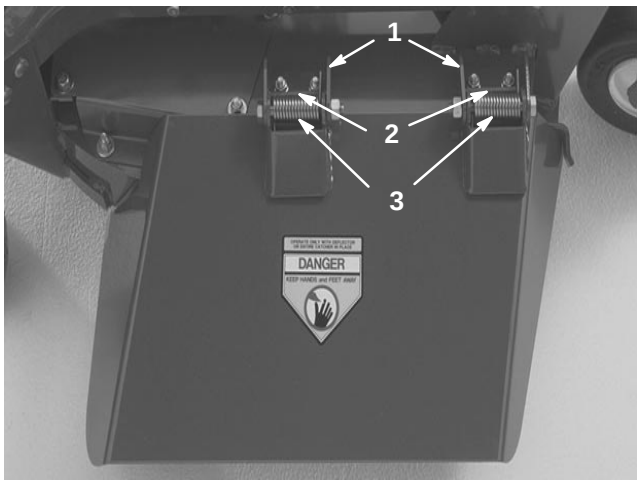

Figure 34

1. Deflector mounts
2. Pivot brackets
3. Pivot springs

3. To remove the pivot brackets, remove the carriage bolts and nuts (Fig. 34).

4. Install the pivot brackets on top of the discharge opening with the carriage bolts and nuts. The head of the carriage bolts must be on the inside of the cutting unit.

5. Position the deflector mounts on the pivot brackets and secure the parts together with the capscrews, locknuts, and springs. Both locknuts must face each other. Tighten the locknuts until they are flush against the deflector pivots.

6. Lift the deflector and allow it to drop to check the spring tension. The deflector must be held firmly in the full downward position by the spring tension. Correct it if necessary.

Adjusting the Idler Pulley

The idler pulley applies force against the belt so that power can be transmitted to the blade pulleys. If the idler is not tensioned against the belt with sufficient force, maximum power will not be transmitted to the pulleys. Tension on the belt requires 35 to 40 ft.-lb. (47 to 54 N·m) of torque on the large nut, which applies force against the belt. If the idler is not adjusted to these specifications, an adjustment is necessary.

1. Position the machine on a level surface, lower the cutting unit, engage the parking brake, put the traction pedal in neutral, the PTO lever in the Off position, shut the engine off, and remove the ignition key.

2. Release and unhook the latches securing the center cover to the top of the cutting unit. Remove the cover from the cutting unit.

3. Loosen the 2 nuts securing the idler plate in place. Using a socket and torque wrench, tighten the idler adjusting nut to 35–40 ft.-lb. (47 to 54 N·m) (Fig. 35).

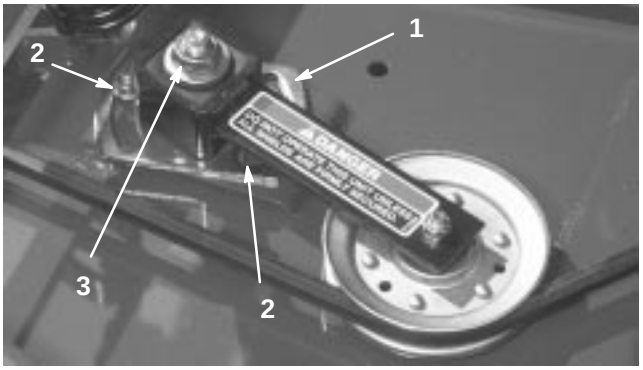

Figure 35

1. Idler plate
2. Nuts (2)
3. Idler adjusting nut

4. Hold the torque against the belt and tighten the 2 nuts so that the idler plate is held securely in place. Release the idler adjusting nut. Install the cover and secure the latches.

Adjusting the Cover Latches

If the cutting unit covers fit loose, the latch tension may be adjusted by loosening the latch mounting screws and sliding the latches (slotted mounting holes in the cutting unit) to the proper position.

Replacing the Drive Belt

The blade drive belt, tensioned by the adjustable idler, is very durable. However, after many hours of use, the belt will show signs of wear. Signs of a worn belt are: squealing when the belt is rotating, blades slipping when cutting grass, frayed edges, burn marks, and cracks. Replace the belt if any of these conditions are evident.

1. Position the machine on a level surface, lower the cutting unit, engage the parking brake, put the traction pedal in neutral, the PTO lever in the Off position, shut the engine off, and remove the ignition key.

2. Release and unhook the latches securing the covers to the top of the cutting unit. Remove the covers.

3. Loosen the 2 nuts securing the idler plate in place and remove the old belt from the pulleys.

4. To install a new belt, the gear box base must be removed. To do this, remove the 4 carriage bolts and locknuts holding the gear box base.

5. Install the new belt around the gear box pulley, spindle pulleys, stationary idler pulley, and adjustable idler pulley (Fig. 36).

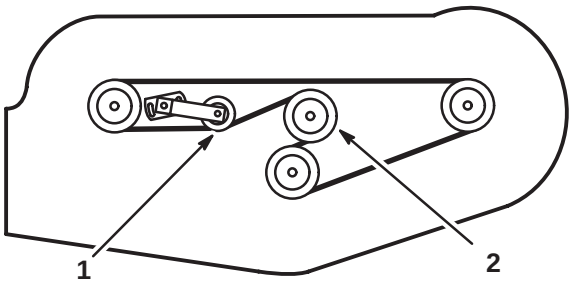

Figure 36

1. Adjustable idler pulley
2. Gear box pulley

6. Install the gear box base with the carriage bolts and locknuts.

7. Using a torque wrench, adjust the tension of the idler pulley against the belt; refer to Adjusting the Idler Pulley, page 22.

8. Install the covers and secure the latches.

UNIT WILL NOT CUT OR CUTS POORLY

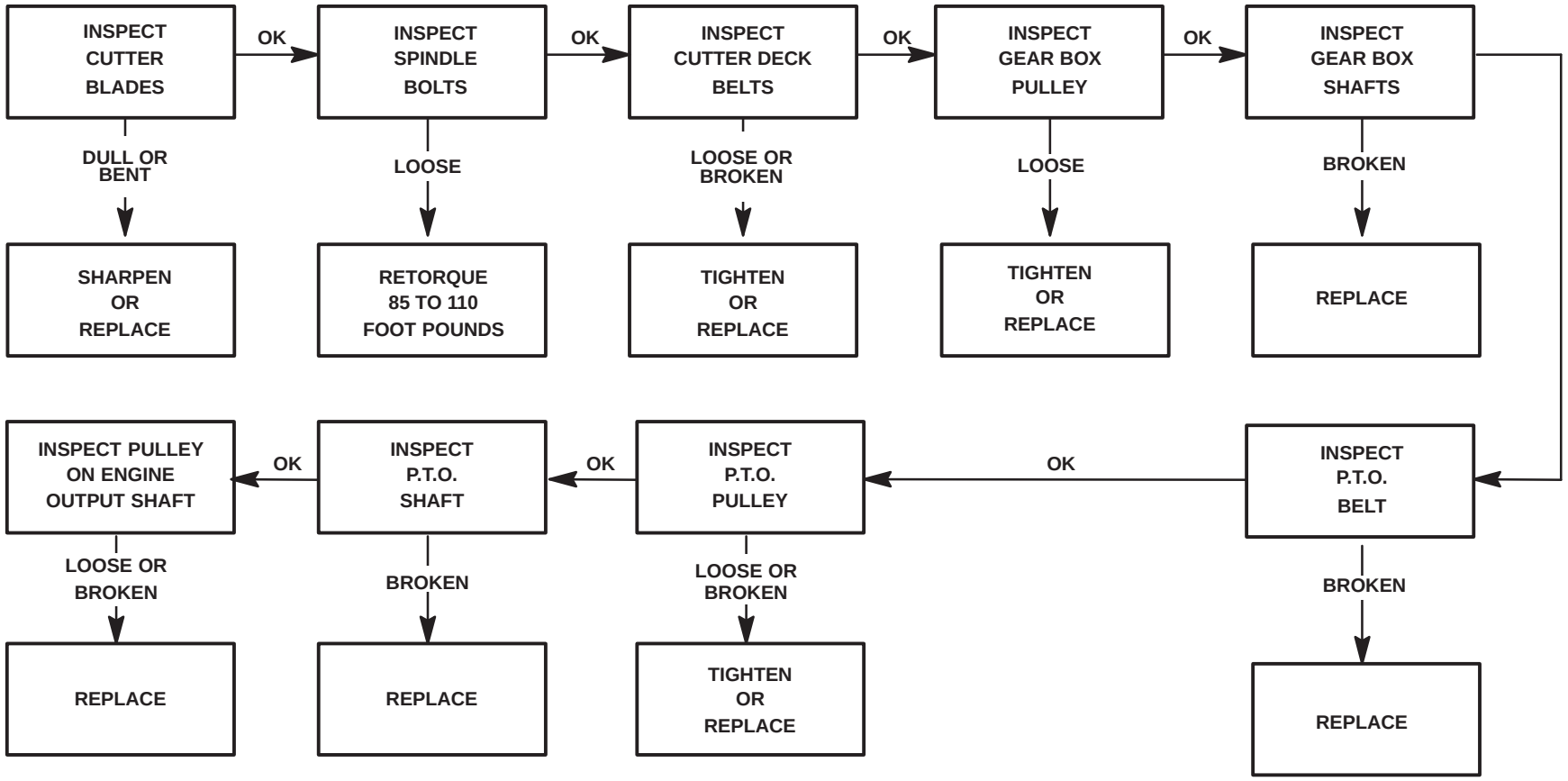

The Toro General Commercial Products Warranty

A Two-Year Limited Warranty

Conditions and Products Covered

The Toro Company and its affiliate, Toro Warranty Company, pursuant to an agreement between them, jointly warrant your 1996 or newer Toro Commercial Product ("Product") purchased after January 1, 1997, to be free from defects in materials or workmanship for two years or 1500 operational hours*, whichever occurs first. Where a warrantable condition exists, we will repair the Product at no cost to you including diagnosis, labor, parts, and transportation. This warranty begins on the date the Product is delivered to the original retail purchaser.

* Product equipped with hour meter

Instructions for Obtaining Warranty Service

You are responsible for notifying the Commercial Products Distributor or Authorized Commercial Products Dealer from whom you purchased the Product as soon as you believe a warrantable condition exists.

If you need help locating a Commercial Products Distributor or Authorized Dealer, or if you have questions regarding your warranty rights or responsibilities, you may contact us at:

Toro Commercial Products Service Department
Toro Warranty Company
8111 Lyndale Avenue South
Bloomington, MN 55420-1196
952-888-8801 or 800-982-2740
E-mail: commercial.service@toro.com

Owner Responsibilities

As the Product owner, you are responsible for required maintenance and adjustments stated in your operator's manual. Failure to perform required maintenance and adjustments can be grounds for disallowing a warranty claim.

Items and Conditions Not Covered

Not all product failures or malfunctions that occur during the warranty period are defects in materials or workmanship. This express warranty does not cover the following:

- Product failures which result from the use of non-Toro replacement parts, or from installation and use of add-on, modified, or unapproved accessories
- Product failures which result from failure to perform required maintenance and/or adjustments
- Product failures which result from operating the Product in an abusive, negligent or reckless manner
- Parts subject to consumption through use unless found to be defective. Examples of parts which are consumed, or used up, during normal Product operation include, but are not limited to, blades, reels, bedknives, tines, spark plugs, castor wheels, tires, filters, belts, etc.
- Failures caused by outside influence. Items considered to be outside influence include, but are not limited to, weather, storage practices, contamination, use of unapproved coolants, lubricants, additives, or chemicals, etc.
- Normal "wear and tear" items. Normal "wear and tear" includes, but is not limited to, damage to seats due to wear or abrasion, worn painted surfaces, scratched decals or windows, etc.

Parts

Parts scheduled for replacement as required maintenance are warranted for the period of time up to the scheduled replacement time for that part.

Parts replaced under this warranty become the property of Toro. Toro will make the final decision whether to repair any existing part or assembly or replace it. Toro may use factory remanufactured parts rather than new parts for some warranty repairs.

General Conditions

Repair by an Authorized Toro Distributor or Dealer is your sole remedy under this warranty.

Neither The Toro Company nor Toro Warranty Company is liable for indirect, incidental or consequential damages in connection with the use of the Toro Products covered by this warranty, including any cost or expense of providing substitute equipment or service during reasonable periods of malfunction or non-use pending completion of repairs under this warranty. Except for the Emissions warranty referenced below, if applicable, there is no other express warranty. All implied warranties of merchantability and fitness for use are limited to the duration of this express warranty.

Some states do not allow exclusions of incidental or consequential damages, or limitations on how long an implied warranty lasts, so the above exclusions and limitations may not apply to you.

This warranty gives you specific legal rights, and you may also have other rights which vary from state to state.

Note regarding engine warranty: The Emissions Control System on your Product may be covered by a separate warranty meeting requirements established by the U.S. Environmental Protection Agency (EPA) and/or the California Air Resources Board (CARB). The hour limitations set forth above do not apply to the Emissions Control System Warranty. Refer to the Engine Emission Control Warranty Statement printed in your operator's manual or contained in the engine manufacturer's documentation for details.

Countries Other than the United States or Canada

Customers who have purchased Toro products exported from the United States or Canada should contact their Toro Distributor (Dealer) to obtain guarantee policies for your country, province, or state. If for any reason you are dissatisfied with your Distributor's service or have difficulty obtaining guarantee information, contact the Toro importer. If all other remedies fail, you may contact us at Toro Warranty Company.

Part No. 374-0031 Rev. –