Form No. 3326–911

62in Guardian® Recycler® Mower

Groundsmaster® 200 Series

Model No. 30569—210000001 and Up

Parts Catalog

Ordering Replacement Parts

To order replacement parts, please supply: the part number, the quantity, and the description of each part desired.

Understanding Reference Numbers

Each identified part in an illustration has a reference number. The reference number for a part also appears in the parts list, along with other information about the part.

This catalog uses two special reference number formats, one to indicate parts in a service assembly and another to indicate the quantity of a given part in an illustration.

Service Assembly Reference Numbers

Parts in service assemblies have reference numbers in the form **a:b.** The **a** represents the reference number of the entire service assembly and the **b** represents a sequential number unique to each part within the service assembly.

For example, a wheel assembly might be identified by reference number **6**, the tire by **6:1**, the valve by **6:2**, and the wheel by **6:3**. When you order the assembly identified by reference number 6, you receive all parts identified by reference numbers 6:1, 6:2, and 6:3. However, you may also order any part individually.

Reference numbers of this type appear in illustrations and in part lists.

Reference Numbers Indicating Quantity

In an illustration, if a reference number indicates more than one part, the reference number has the form **nX y.** The **n** represents the quantity of the part, the **X** is the multiplication symbol, and the **y** represents the reference number.

For example, in an illustration, the reference number **2X 37** means that two of the parts identified by reference number 37 are indicated.

© The TORO Company — 2002
All Rights Reserved

Contents

Description	Page
Housing and Idler Assembly	3
Carrier Frame Assembly	4
Cutting Chamber Assembly	6
Spindle and Blade Assembly	7
Gearbox Installation Assembly	8
Gear Box Assembly No. 104–3441	9
Cover Assembly	10
Counterbalance Manifold Installation Assembly	11
Counterbalance Manifold ASM No. 92–5638	12
Hydraulic Schematic	13

Accessories

Description	Model / Part No.
Kit–Spindle	95–3081
Kit–Blade and Belt	95–3073

Part Description Abbreviations

Part descriptions in this catalog may include the following abbreviations.

Abbreviation	Meaning
AR	as required
ASM	assembly
CARR	carriage
DEG	degrees
FH	flat head
GA	gauge
HF	hex flange
HH	hex head
HHF	hex head flange
HLH	hex lag head
HJ	hex jam
HOC	height-of-cut
HS	hex socket
HSBH	hex socket button head
HSFH	hex socket flat head
HSH	hex socket head
HWH	hex washer head
HWHTF	hex washer head thread forming
HYD	hydraulic
INC	incorporated
LH	left hand
NI	nylon insert
PPH	Phillips pan head
PTH	Phillips truss head
PTO	power take off
RH	right hand
SFH	slotted fillister head
SHH	slotted hex head
SQH	square head
SHWH	slotted hex washer head
SPH	slotted pan head
SRH	slotted round head
STD	standard
TAP	self tapping
TTH	Torx truss head
WH	wing head

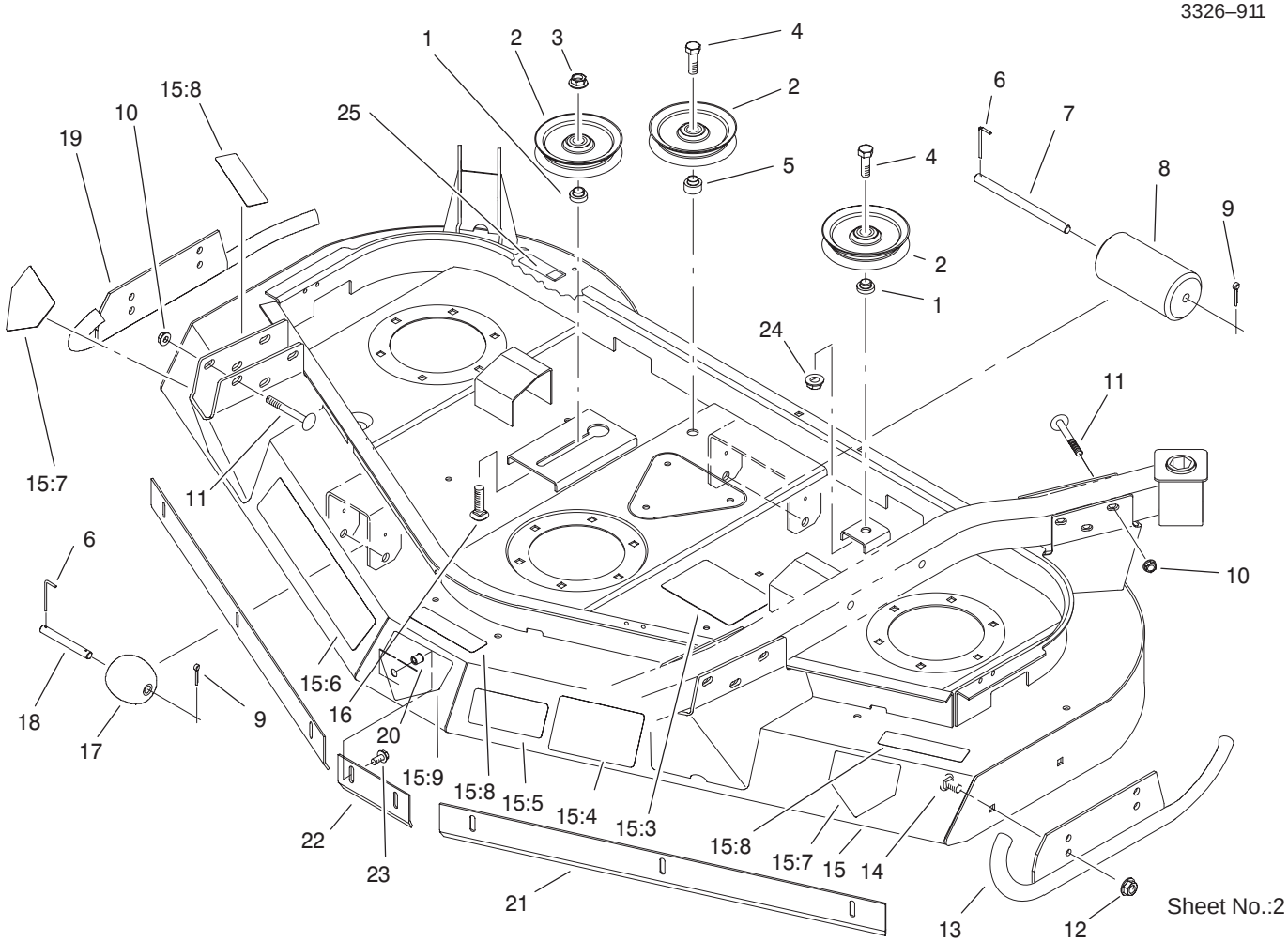

Housing and Idler Assembly

Ref. No.	Part No.	Qty.	Description
1	69–6960	2	Spacer–Idler
2	63–1540–03	3	Pulley–Idler
3	3296–25	1	Nut–Lock NI
4	325–6	2	Screw–HH
5	69–6970	1	Spacer–Idler, Flat
6	57–0690	3	Pin–Special
7	40–6400	1	Shaft–Roller
8	36–1740	1	Roller–Deck
9	3272–11	3	Pin–Cotter
10	32128–19	12	Nut–HF
11	3231–10	12	Screw–CARR
12	32128–21	4	Nut–HF
13	92–5589–01	1	Skid–LH
14	3231–1	4	Screw–CARR
15	92–5571	1	Deck ASM
15:3	92–4092	1	Decal–Routing, Belt
15:4	105–9552	1	Decal–Warning
15:5	93–7818	1	Decal–Torque, Blade Bolt
15:6	92–4088	1	Decal–Guardian
15:7	100–6582	2	Decal–Danger, Int'l
15:8	100–6578	3	Decal–Danger
15:9	100–6583	1	Decal–Danger
16	3233–30	1	Screw–CARR
17	29–4820	2	Roller
18	57–0680	2	Shaft–Roller

Ref. No.	Part No.	Qty.	Description
19	92–5592–01	1	Skid–RH
20	32148–7	8	Nut–Insert
21	93–4388–01	2	Baffle–Side
22	93–4389–01	1	Baffle–Center
23	3234–5	8	Screw
24	32128–23	1	Nut–HF
25	104–0131	1	Decal–Ansi

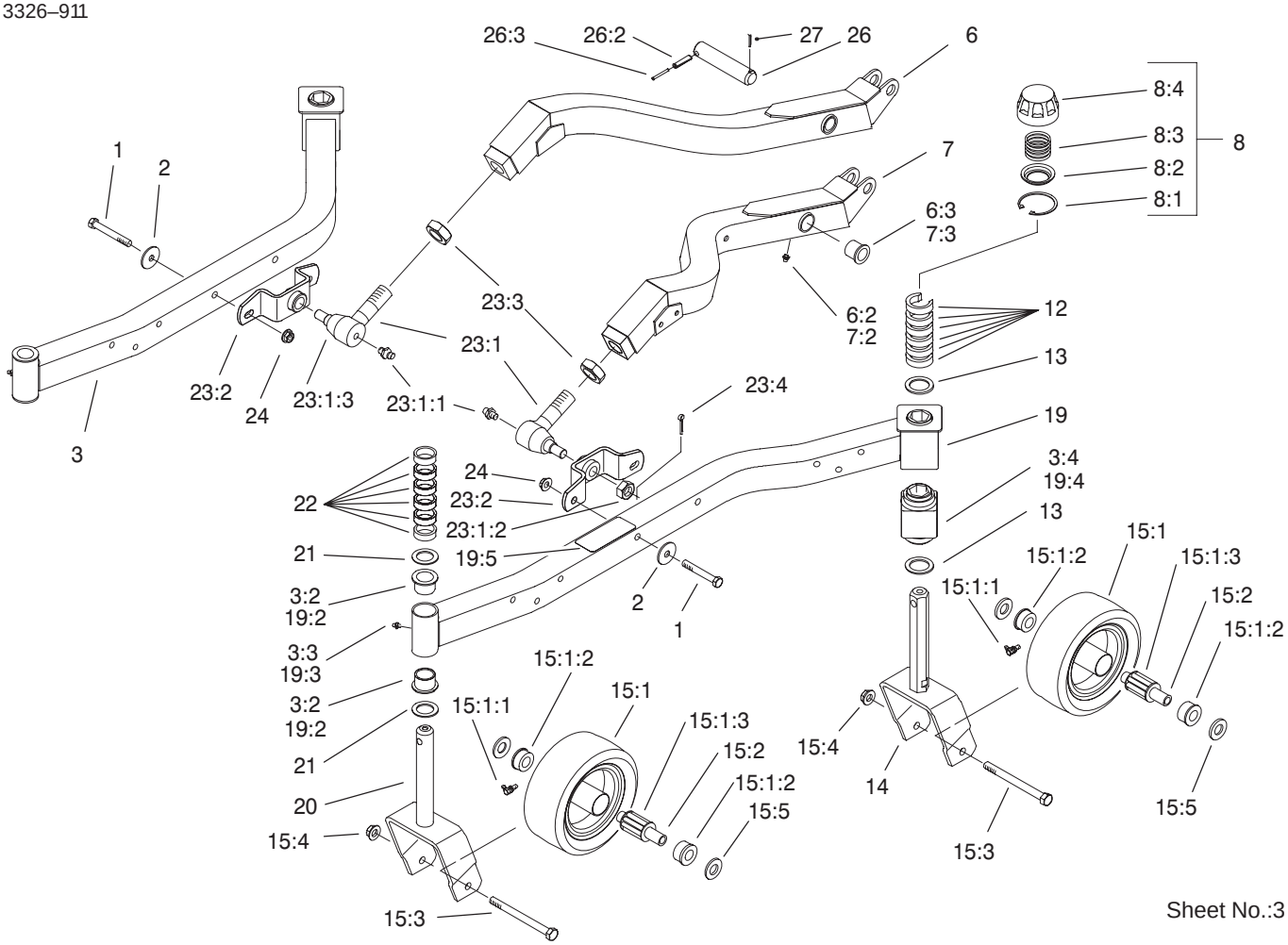

Sheet No.:3

Carrier Frame Assembly

Ref. No.	Part No.	Qty.	Description
1	324–12	4	Screw–HH
2	66–6480	4	Washer
3	92–5623	1	RH Castor Arm ASM
3:2	94–1291	2	Bushing–Special
3:3	302–5	1	Fitting–Grease
3:4	93–8471	1	Bushing–Rubber, Square
6	99–1254	1	RH Lift Arm ASM
6:2	302–5	1	Fitting–Grease
6:3	256–268	2	Bushing
7	99–1257	1	LH Lift Arm ASM
7:2	302–5	1	Fitting–Grease
7:3	256–268	2	Bushing
8	92–8862	4	HOC Cap ASM
8:1	92–5581	1	Ring–Retaining
8:2	92–5583	1	Washer–Cap
8:3	92–5584	1	Spring–Compression
8:4	92–8861	1	Cap–HOC
12	92–8866	12	Spacer
13	92–1765	4	Washer–Thrust
14	92–5578–01	2	Fork–Castor, Rear
*15	95–3076	1	Wheel Kit–Castor
15:1	85–5760	4	Wheel
15:1:1	302–40	1	Fitting–Grease
15:1:2	62–5580	2	Bearing–Outside
15:1:3	83–4740	1	Bearing

Ref. No.	Part No.	Qty.	Description
15:2	62–4340	4	Spanner
15:3	325–22	4	Screw–HH
15:4	32128–23	4	Nut–HF
15:5	3256–6	8	Washer–Flat
19	92–5573	1	Castor Arm ASM–LH
19:2	94–1291	2	Bushing–Special
19:3	302–5	1	Fitting–Grease
19:4	93–8471	1	Bushing–Rubber, Square
19:5	93–7826	1	Decal–HOC
20	98–7068–01	2	Fork–Castor
21	3–6781	4	Washer–Thrust
22	63–0070	12	Spacer
☆23		2	Balljoint ASM
23:1	86–8100	1	Joint–Ball
23:1:1	302–5	1	Fitting–Grease
23:1:2	32136–2	1	Nut–SHH
23:1:3	105–7835	1	Seal
23:2	98–7944–01	1	Mount–Balljoint
23:3	21–3000	1	Nut–HJ, Push Arm
23:4	3272–12	1	Pin–Cotter
24	32128–42	4	Nut–HF
26	98–2330	2	Pivot Pin ASM
26:2	32121–67	1	Pin–Roll
26:3	32121–61	1	Pin–Roll
27	3272–19	2	Pin–Cotter

* Not illustrated
☆ Not serviced separately

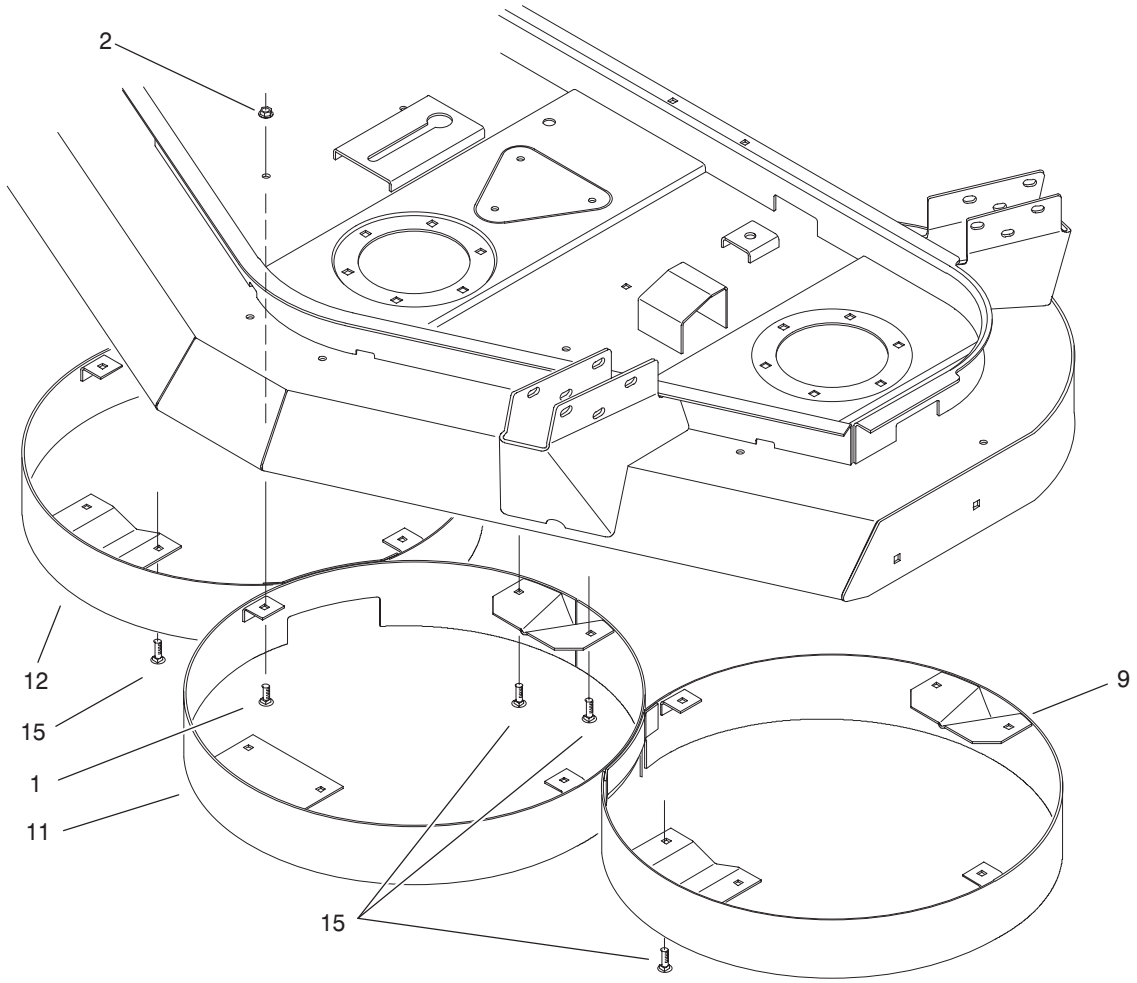

Sheet No.:4

Cutting Chamber Assembly

Ref. No.	Part No.	Qty.	Description
1	3230–18	14	Screw–CARR
2	32128–13	18	Nut–HF
9	92–5594–01	1	LH Chamber ASM
11	92–5600–01	1	Center Chamber ASM
12	92–5602–01	1	RH Chamber ASM
15	3230–23	4	Screw–CARR

Ref. No.	Part No.	Qty.	Description

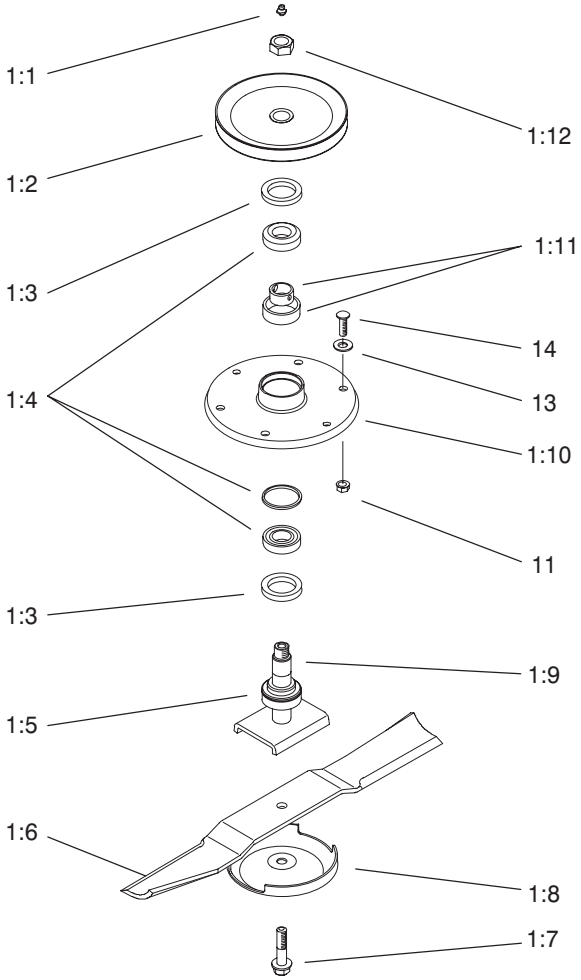

Sheet No.:5

Spindle and Blade Assembly

Ref. No.	Part No.	Qty.	Description
☆1		3	Spindle ASM
1:1	302–2	1	Fitting–Grease
1:2	92–5607–03	1	Pulley
1:3	253–139	2	Seal–Oil
1:4	27–0960	1	Bearing ASM
1:5	92–5606	1	Spacer–Spindle
1:6	92–5608	1	Blade
1:7	92–5816	1	Bolt–Blade
1:8	72–9361	1	Cup–Scalp, Anti
1:9	92–5604	1	Shaft–Spindle
1:10	61–4160	1	Housing–Spindle
1:11	27–5970	1	Spacer–Set, Matched
1:12	32146–20	1	Nut–Jam
11	32128–21	18	Nut–HF
13	3256–24	2	Washer–Flat
14	3231–27	18	Screw–CARR

Ref. No.	Part No.	Qty.	Description

☆ Not serviced separately

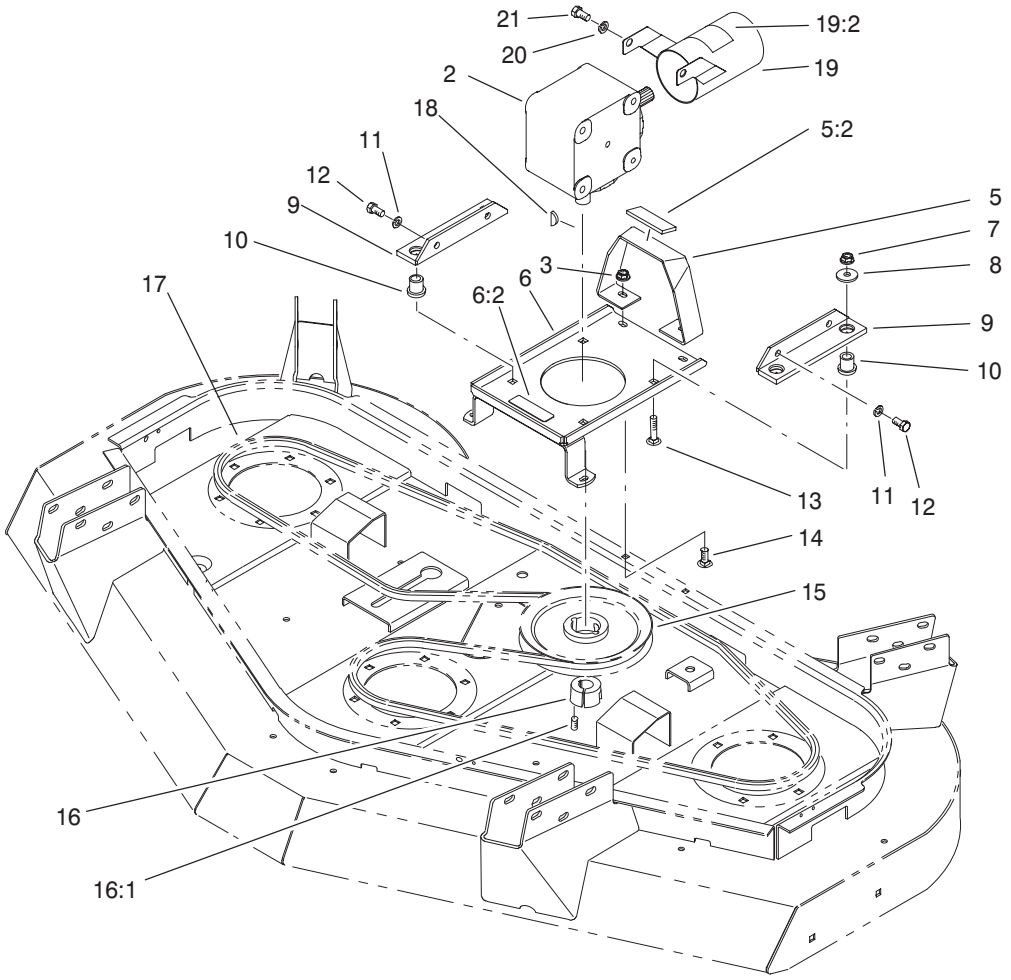

Sheet No.:6

Gearbox Installation Assembly

Ref. No.	Part No.	Qty.	Description
2	104–3441	1	Gearbox
3	32128–13	4	Nut–HF
5	92–5644	1	Gearbox Stand ASM
5:2	74–0342	1	Cushion–Rubber
6	92–5609	1	Gearbox Plate ASM
6:2	93–6697	1	Decal–Lube
7	32128–21	4	Nut–HF
8	63–8410	4	Washer
9	68–8560–03	2	Bracket–Gearbox
10	63–9750	4	Mount
11	3253–21	4	Washer–Lock
12	323–4	4	Screw–HH
13	3231–26	4	Screw–CARR
14	3230–22	4	Screw–CARR
15	85–5860–03	1	Pulley–Gearbox
16	23–1640	1	Bushing–Taperlock
16:1	3247–4	2	Screw–Set
17	92–5588	1	V–Belt
18	3257–5	1	Key–Woodruff
19	99–8408	1	PTO Guard ASM
19:2	93–7283	1	Decal–Danger
20	3253–21	2	Washer–Lock
21	323–2	2	Screw–HH

Ref. No.	Part No.	Qty.	Description

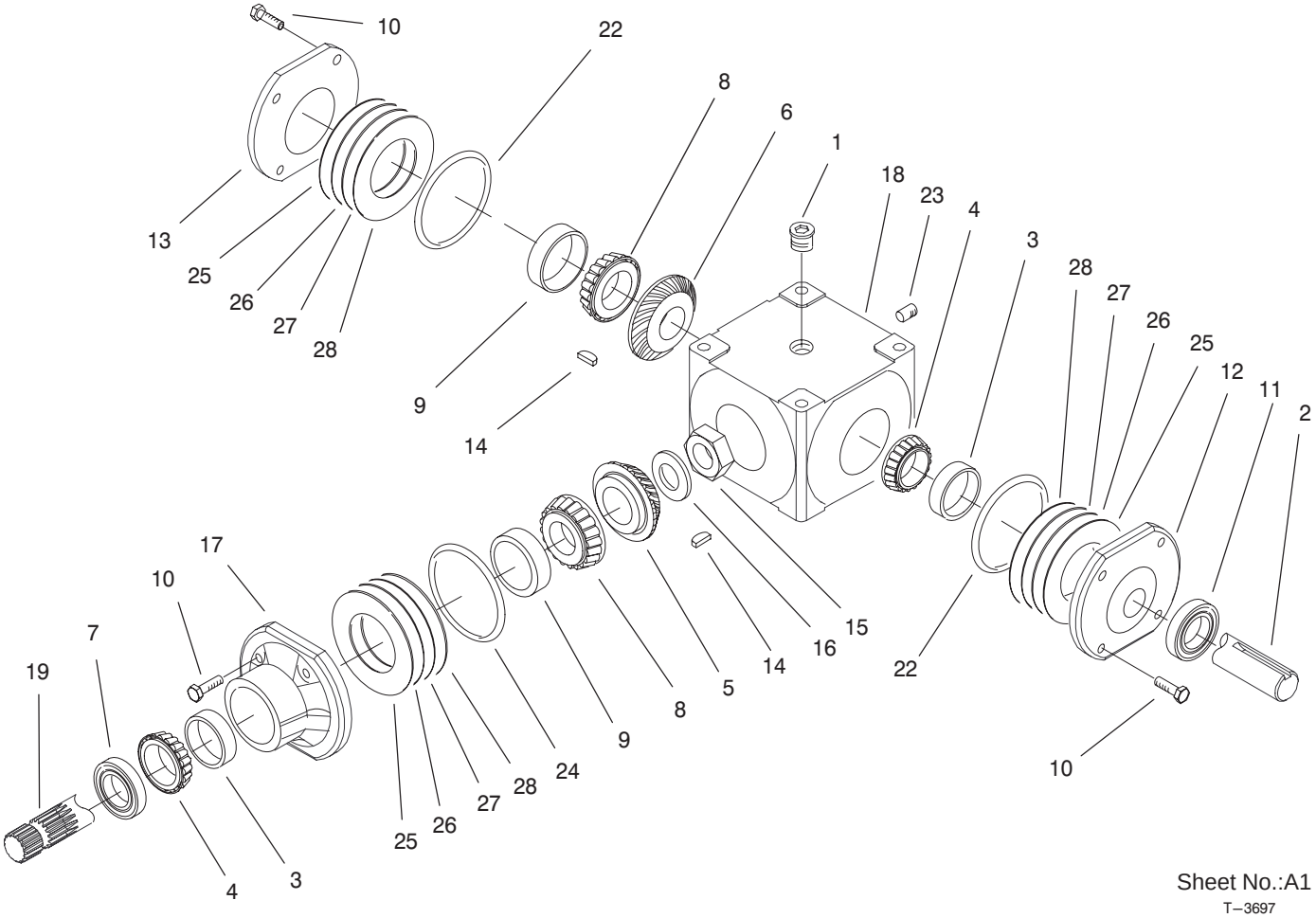

Sheet No.:A1

T–3697

Gear Box Assembly No. 104–3441

Ref. No.	Part No.	Qty.	Description
1	100–5812	3	Plug
2	100–9980	1	Shaft–Cross
3	100–4571	2	Bearing–Cup
4	100–4572	2	Bearing–Cone
5	100–9981	1	Gear–Spiral, RH
6	100–9982	1	Gear–Spiral, LH
7	100–4575	1	Seal
8	100–5816	2	Bearing–Cone
9	100–5817	2	Bearing–Cup
10	100–5818	12	Screw–HH
11	100–4576	1	Seal
12	100–5820	1	Cap–End
13	100–9984	1	Cap–End, Closed
14	100–5822	2	Key
15	100–5823	1	Nut–Lock
16	100–5824	1	Washer
17	100–5825	1	Housing–Pinion
18	100–9985	1	Case
19	104–0118	1	Shaft–Pinion
22	100–1372	2	O–Ring
23	100–4579	1	Plug
24	100–1393	1	O–Ring
25	100–1394	1	Shim–Green (.003)
26	100–1395	1	Shim–Blue (.005)
27	100–1396	1	Shim–Brown (.010)
28	100–1397	1	Shim–Yellow (.020)

Ref. No.	Part No.	Qty.	Description

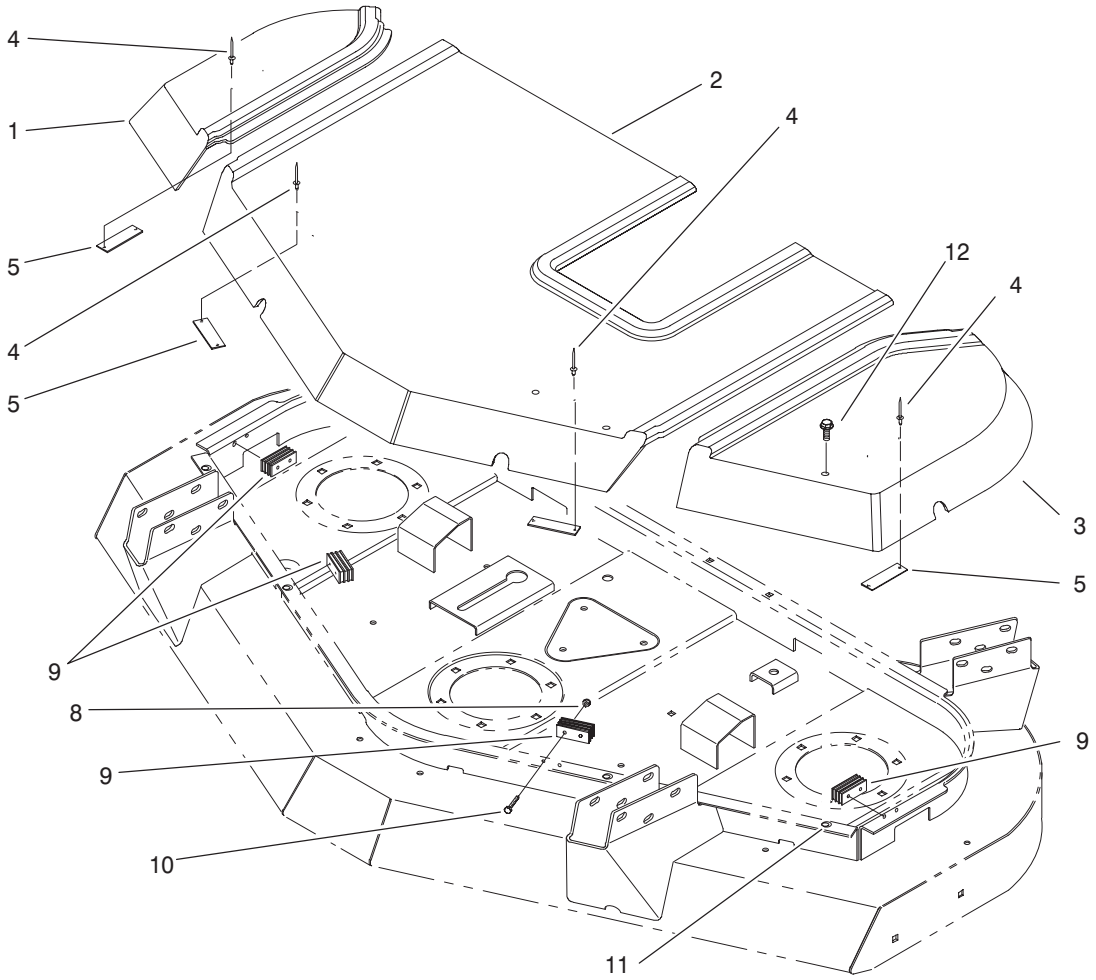

Sheet No.:7

Cover Assembly

Ref. No.	Part No.	Qty.	Description
1	92–5619	1	Cover–RH
2	92–5620	1	Cover–Center
3	92–5618	1	Cover–LH
4	3269–25	8	Rivet–Pop
5	69–6870	4	Plate–Magnet
8	3296–2	8	Nut–Lock
9	69–6260	4	Magnet
10	32105–1	8	Screw–SHH
11	32148–7	4	Nut–Insert
12	3234–5	4	Screw

Ref. No.	Part No.	Qty.	Description

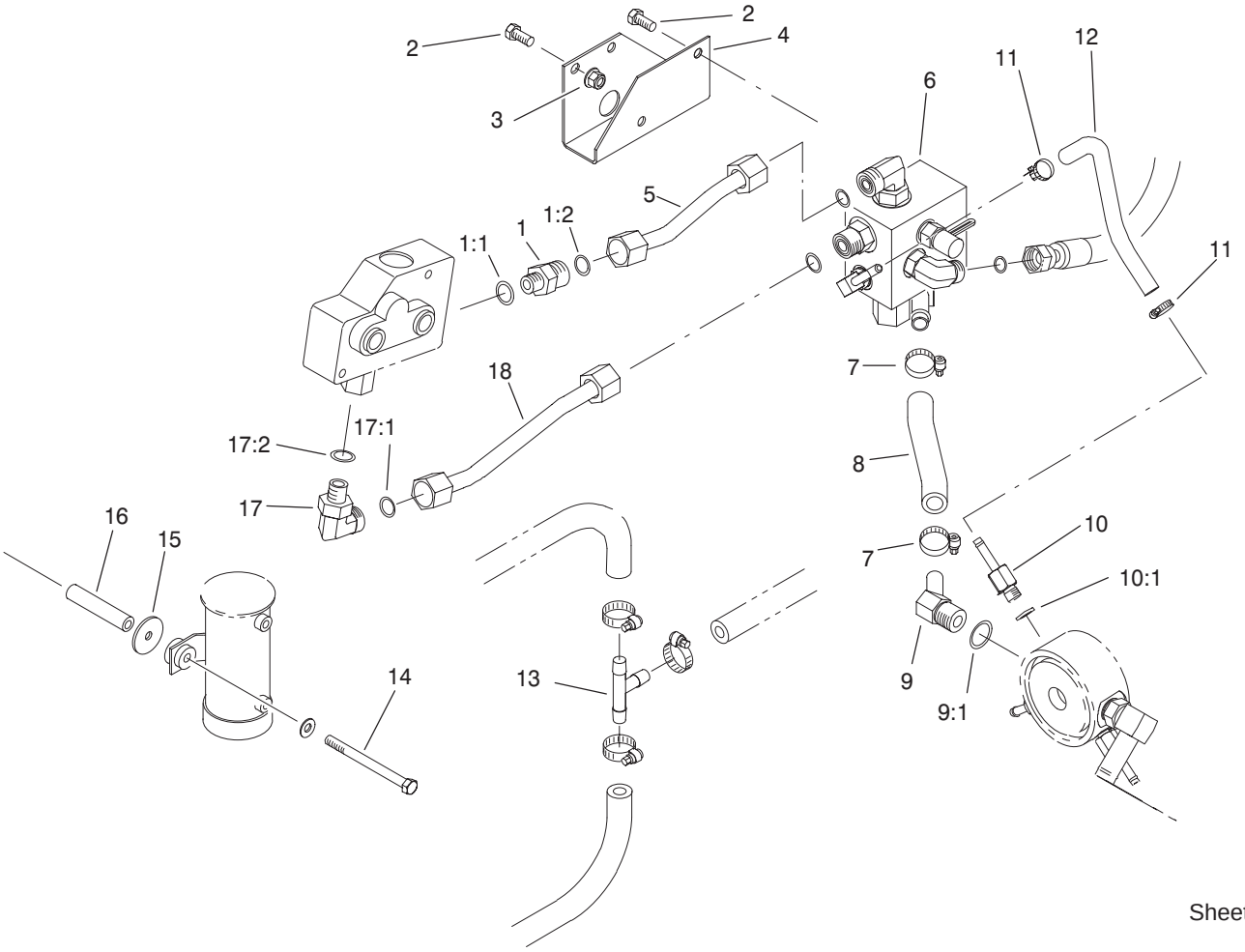

Sheet No.:8

Counterbalance Manifold Installation Assembly

Ref. No.	Part No.	Qty.	Description
1	340–5	1	Fitting–Straight
1:1	237–42	1	O–Ring
1:2	237–30	1	O–Ring
2	3234–14	4	Screw–HHF
3	32128–13	2	Nut–HF
4	92–5635–01	1	Bracket–Manifold
5	92–5636	1	Tube ASM
6	92–5638	1	Manifold ASM
7	2412–36	2	Clamp–Hose
8	92–5639	1	Hose–Hydrualic
9	354–126	1	Fitting–HYD, 45°
9:1	237–79	1	O–Ring
10	92–5512	1	Fitting–Hose, Barbed
10:1	237–78	1	O–Ring
11	2412–108	2	Clamp–Worm
12	65–2970	1	Hose–Hydraulic
13	354–107	1	Fitting–HYD, Tee
14	321–24	2	Screw–HH
15	3256–55	2	Washer–Flat
16	92–5634	2	Tube
17	340–99	1	Fitting–HYD, 90°
17:1	237–30	1	O–Ring
17:2	237–42	1	O–Ring
18	92–5637	1	Tube ASM
*99	92–5640	1	Fitting–HYD, Cross

Ref. No.	Part No.	Qty.	Description

* Not illustrated

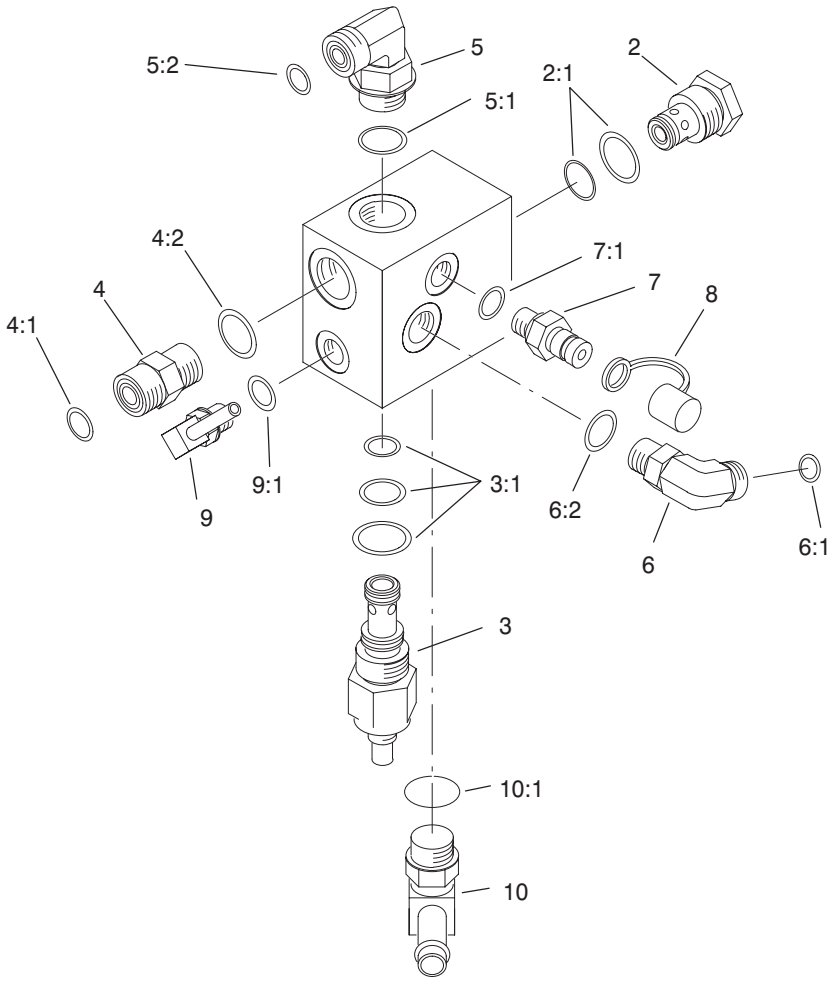

Sheet No.:A2

T–3460

Counterbalance Manifold Assembly No. 92–5638

Ref. No.	Part No.	Qty.	Description
☆1		1	Manifold Block
2	92–5645	1	Cartridge–Relief
2:1	75–2080	1	Seal Kit
☆2:1:1		1	O–Ring
☆2:1:2		1	O–Ring
☆2:1:3		1	Ring–Backup
3	92–5646	1	Cartridge–Logic
3:1	69–4240	1	Seal Kit
☆3:1:1		1	O–Ring
☆3:1:2		1	O–Ring
☆3:1:3		1	O–Ring
4	340–4	1	Adapter
4:1	237–30	1	O–Ring
4:2	237–79	1	O–Ring
5	340–98	1	Fitting–HYD, 90°
5:1	237–79	1	O–Ring
5:2	237–30	1	O–Ring
6	340–77	1	Fitting–HYD, 90°
6:1	237–22	1	O–Ring
6:2	237–42	1	O–Ring
7	354–77	1	Fitting–Quick
7:1	237–78	1	O–Ring
8	353–947	1	Cap–Dust, Rubber
9	304–99	1	Stem–Hose
9:1	237–78	1	O–Ring

Ref. No.	Part No.	Qty.	Description
10	354–120	1	Fitting–HYD, 90°
10:1	237–79	1	O–Ring

☆ Not serviced separately

Hydraulic Schematic

T–1723

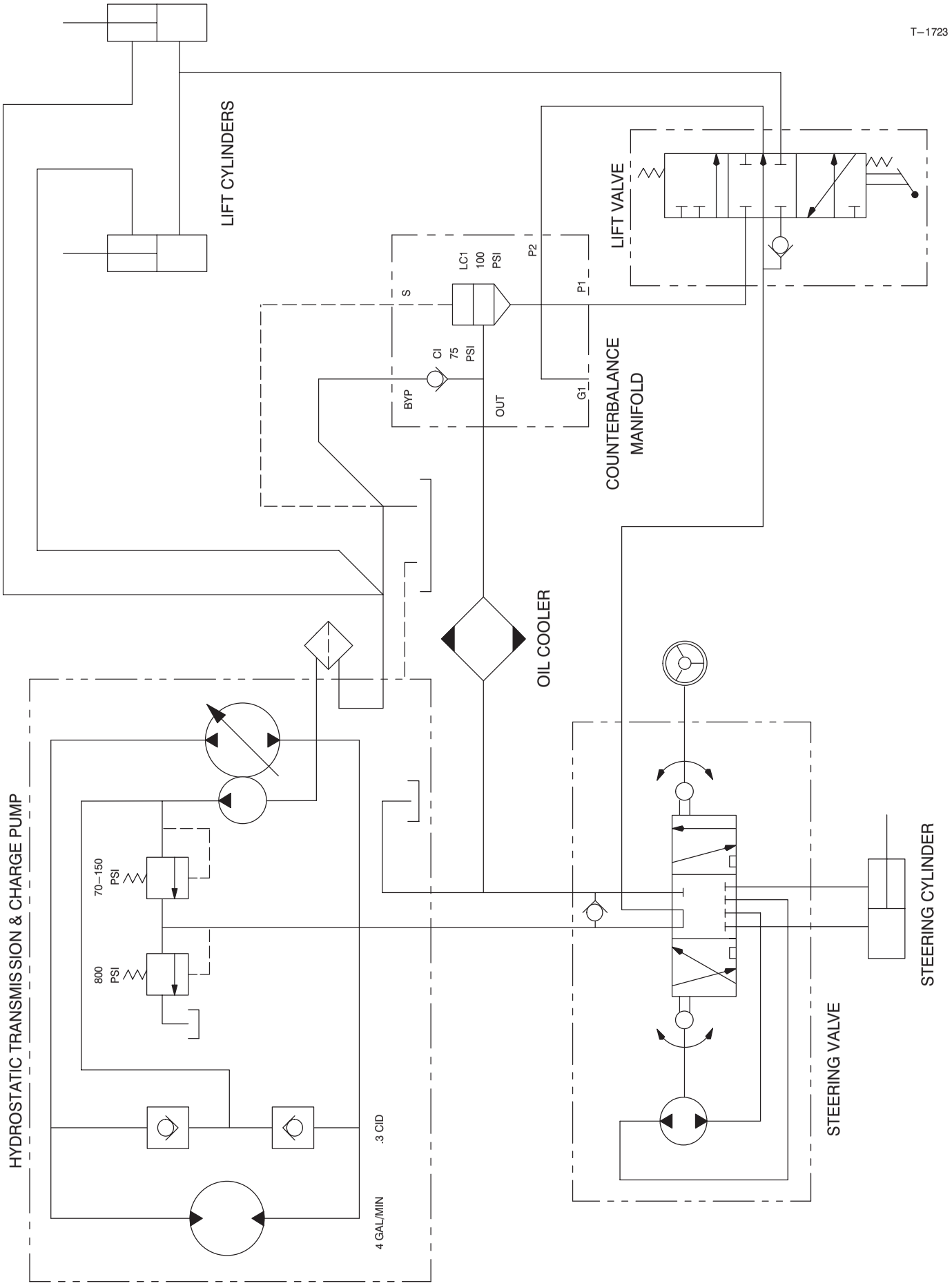

Maintenance Record

Date								

Maintenance Record

Date								

Maintenance Record

Date								


TORO®