Form No. 3453-534 Rev A

TORO®

Count on it.

Parts Catalog

MB TX 2500S

Tracked Mud Buggy

Model No. 68141—Serial No. 411796997 and Up

Register at www.Toro.com.
Original Instructions (EN)

3453-534 A

Ordering Replacement Parts

To order replacement parts, please supply the part number, the quantity, and the description of each part desired.

Understanding Reference Numbers

Each identified part in an illustration has a reference number. The reference number for a part also appears in the parts list, along with other information about the part.

This catalog uses two special reference number formats, one to indicate parts in a service assembly and another to indicate the quantity of a given part in an illustration.

Service Assembly Reference Numbers

Parts in service assemblies have reference numbers in the form a:b. The a represents the reference number of the entire service assembly and the b represents a sequential number unique to each part within the service assembly.

For example, a wheel assembly might be identified by reference number 6, the tire by 6:1, the valve by 6:2, and the wheel by 6:3. When you order the assembly identified by reference number 6, you receive all parts identified by reference numbers 6:1,6:2, and 6:3. However, you may also order any part individually. Reference numbers of this type appear in illustration and in parts lists.

Reference Numbers Indicating Quantity

In an illustration, if a reference number indicates more than one part, the reference number has the form nX y. The n represents the quantity of the part, the X is the multiplication symbol, and the y represents the reference number.

For example, in an illustration, the reference number 2X 37 means that two of the parts identified by reference number 37 are indicated.

Contents

Frame Assembly 4
Hydraulic Pump Assembly 6
LH Hydro Transaxle Assembly No. 132-8802 8
RH Hydro Transaxle Assembly No. 132-8803 10
Hydraulic Cylinder Assembly No. 140-3558 12
Hydraulic Manifold Assembly 14
Manifold Assembly No 140-3572 16
Engine Assembly 18
Hydraulic Gear Pump Assembly No. 139-7183 20
Fuel Tank and Tower Assembly 22
Track Assembly 24
Hopper Assembly 26
Electrical Harness Assembly 28
Control Assembly 30
Platform Assembly 32
Hood Assembly 34
Attachments and Accessories 36

© 2022—The Toro® Company
8111 Lyndale Avenue South
Bloomington, MN 55420

Contact us at www.Toro.com.
Printed in the USA.
All Rights Reserved

Frame Assembly

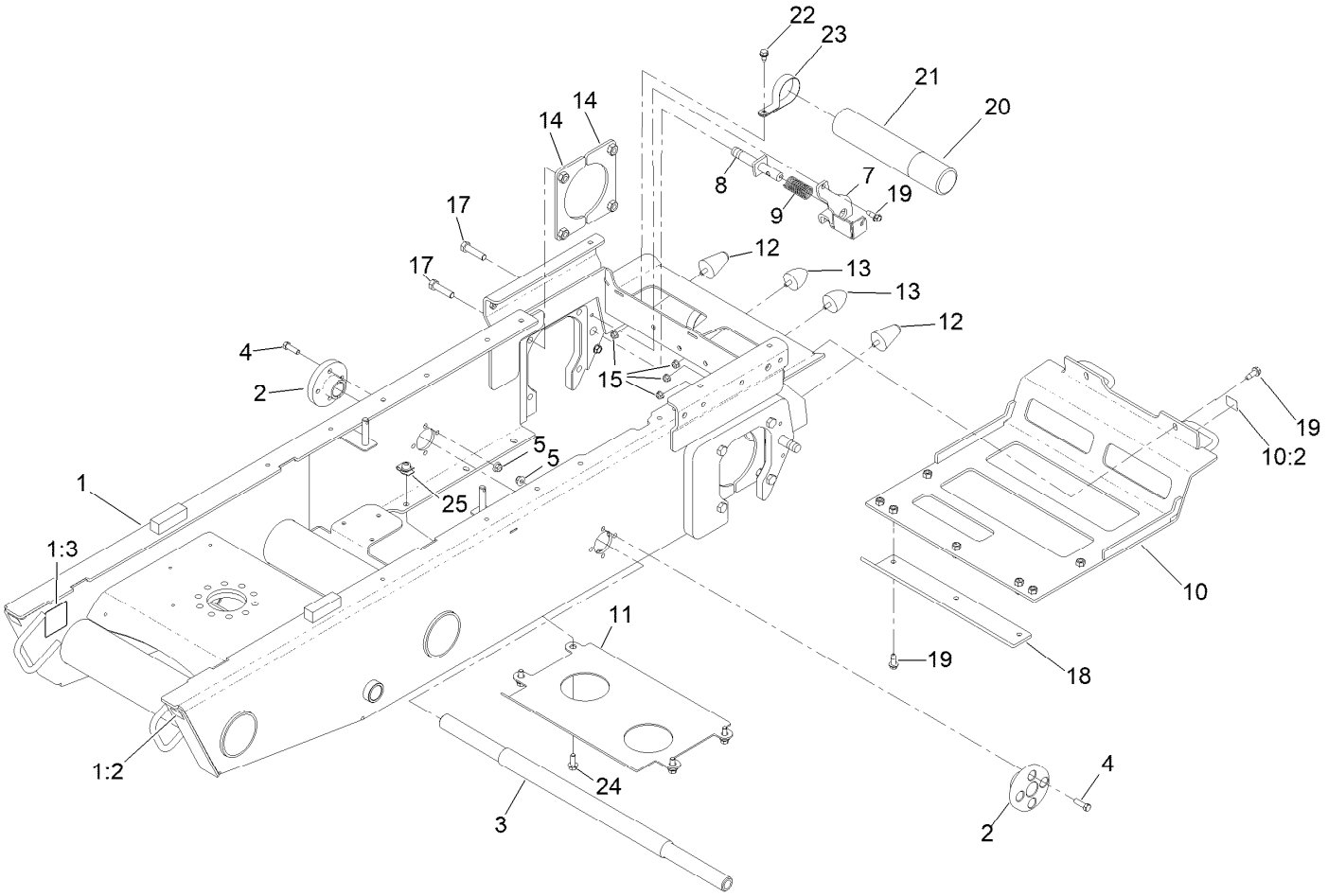

Frame Assembly (continued)

Ref.	Part Number	Qty.	Description
1	139-7197	1	Frame ASM- Swivel
1:2	132-9051	2	Decal-Tiedown
1:3	125-4967	2	Decal-Lift Here
2	132-9075	2	Hub-Mount, Track
3	125-0425	1	Shaft-Track
4	323-7	8	Screw-HH
5	104-8301	8	Nut-HF, NI
7	130-5284-03	2	Bracket-Brake
8	132-8866	2	Shaft-Brake
9	125-0344	2	Spring-Compression
10	136-4651	1	Plate-Side
10:2	132-9051	2	Decal-Tiedown
11	145-1158-03	1	Skid Plate, Hydraulic Tank

Ref.	Part Number	Qty.	Description
12	114-1925	2	Bumper-Rubber
13	114-1926	2	Bumper-Rubber
14	132-8936-0P	4	Hydro Mounting Plate ASM
15	104-8300	4	Nut-HF, NI
17	325-8	8	Screw-HH
18	136-4611-03	1	Plate-Skid
19	105-6245	13	Screw-Tapping
20	104-7048	1	Cap-Housing
21	104-7050	1	Tube-Manual
22	32144-70	2	Screw-HWHTF
23	2412-133	2	Clamp-R
24	3234-11	4	Screw-HHF
25	105-4886	4	Nut-Tinnerman

Hydraulic Pump Assembly

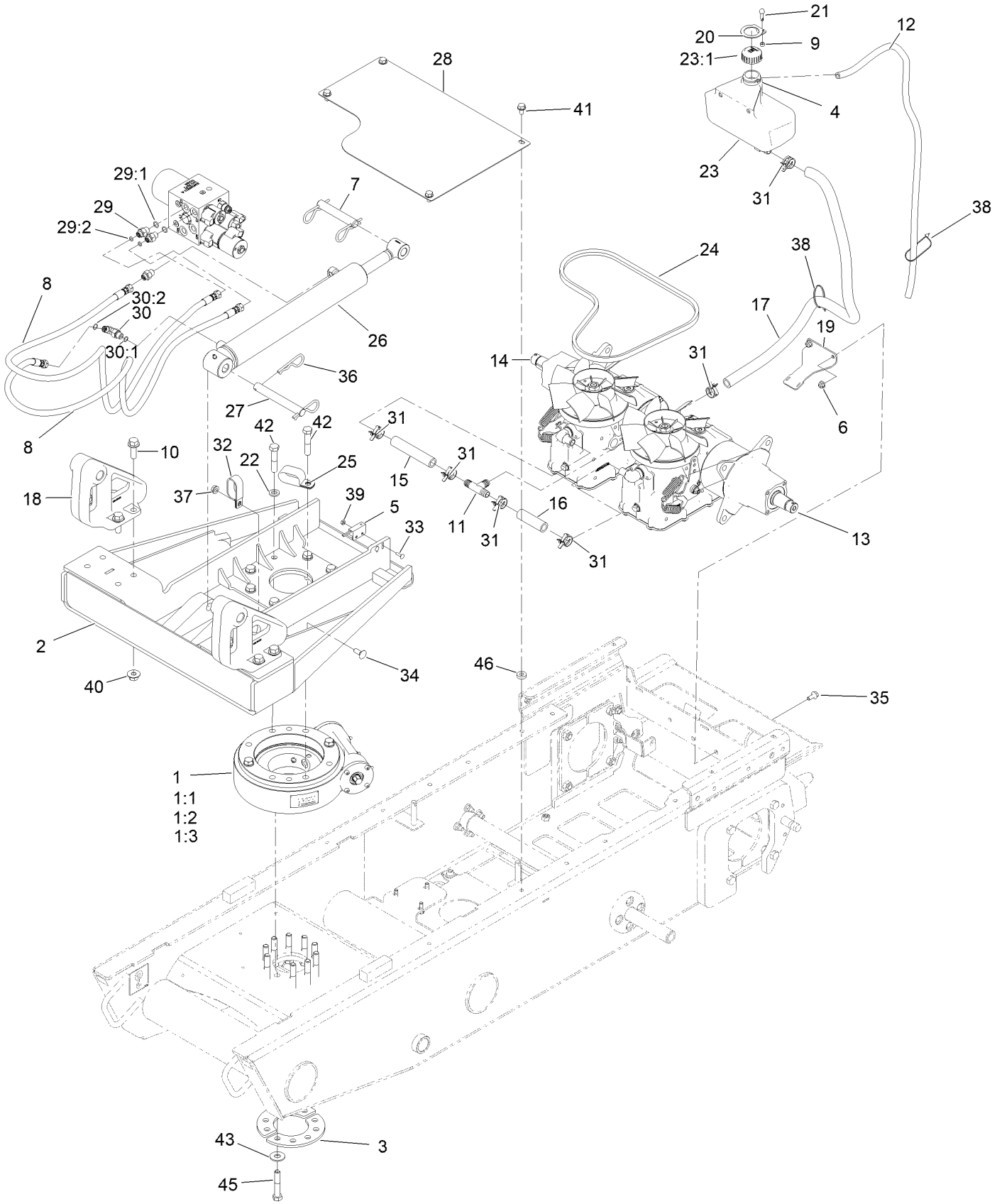

Hydraulic Pump Assembly (continued)

Ref.	Part Number	Qty.	Description
1	139-7184	1	Drive-Slew
1:1	140-3579	1	Motor-HYD, Slew
1:2	139-7235	1	Seal-Lip
1:3	139-7236	1	Seal-Top Plate
2	140-2347-03	1	Top Swivel Plate ASM [black]
3	139-7228-03	2	Spacer-Slew Mount
4	92-2379	1	Clamp-Hose
5	100-1270	1	Switch-Proximity
6	104-8300	2	Nut-HF, NI
7	105-7456	1	Pin-Pivot
8	121-4347	2	Hose-HYD
9	126-0416	1	Spacer
10	130-6482	8	Screw-HHF
11	132-5127	1	Tee
12	132-7563	1	Hose-Breather, Transmission
13	132-8802	1	LH Hydro Transaxle ASM
14	132-8803	1	RH Hydro Transaxle ASM
15	132-8933	1	Hose-HYD, Hydro
16	132-8934	1	Hose-HYD, Hydro
17	132-8935	1	Hose-HYD, Hydro
18	132-9025-03	2	Pivot-Dump
19	132-9032-03	1	Bracket-Hose Retainer
20	136-0549-01	1	Lock-Tank
21	137-3711	1	Screw
22	137-5550	7	Washer-Thrust
23	138-3164	1	Tank-Hydraulic

Ref.	Part Number	Qty.	Description
23:1	133-8677	1	Cap-Vented
24	139-1295	1	Belt-V
25	139-7218	1	Clamp-R, Double
26	140-3558	1	Cylinder, Hydraulic
27	140-3582	1	Pin,Plain
28	140-7204-03	1	Shield_cover
29	340-1	3	Fitting-Straight
29:1	237-21	1	O-Ring
29:2	237-42	1	O-Ring
30	340-82	1	Fitting-Elbow, 90 DEG
30:1	237-42	1	O-Ring
30:2	237-21	1	O-Ring
31	144-2248	6	Clamp-Sc Band
32	2412-137	1	Clamp-R, Double
33	3229-20	2	Screw-CARR
34	3231-2	1	Bolt-CARR
35	3234-47	5	Screw-HHF
36	3290-256	4	Pin-Hair
37	3290-357	1	Nut-HSF
38	3290-378	4	Tie-Cable
39	3296-2	2	Nut-Lock, NI
40	32128-52	8	Nut-Lock, Flange
41	32144-15	4	Screw-HHFTF
42	AU426-840	8	Screw-HH
43	AU495-81163	10	Washer-Flat
45	325-34	10	Screw-HH
46	5-0652	4	Spacer

LH Hydro Transaxle Assembly No. 132-8802

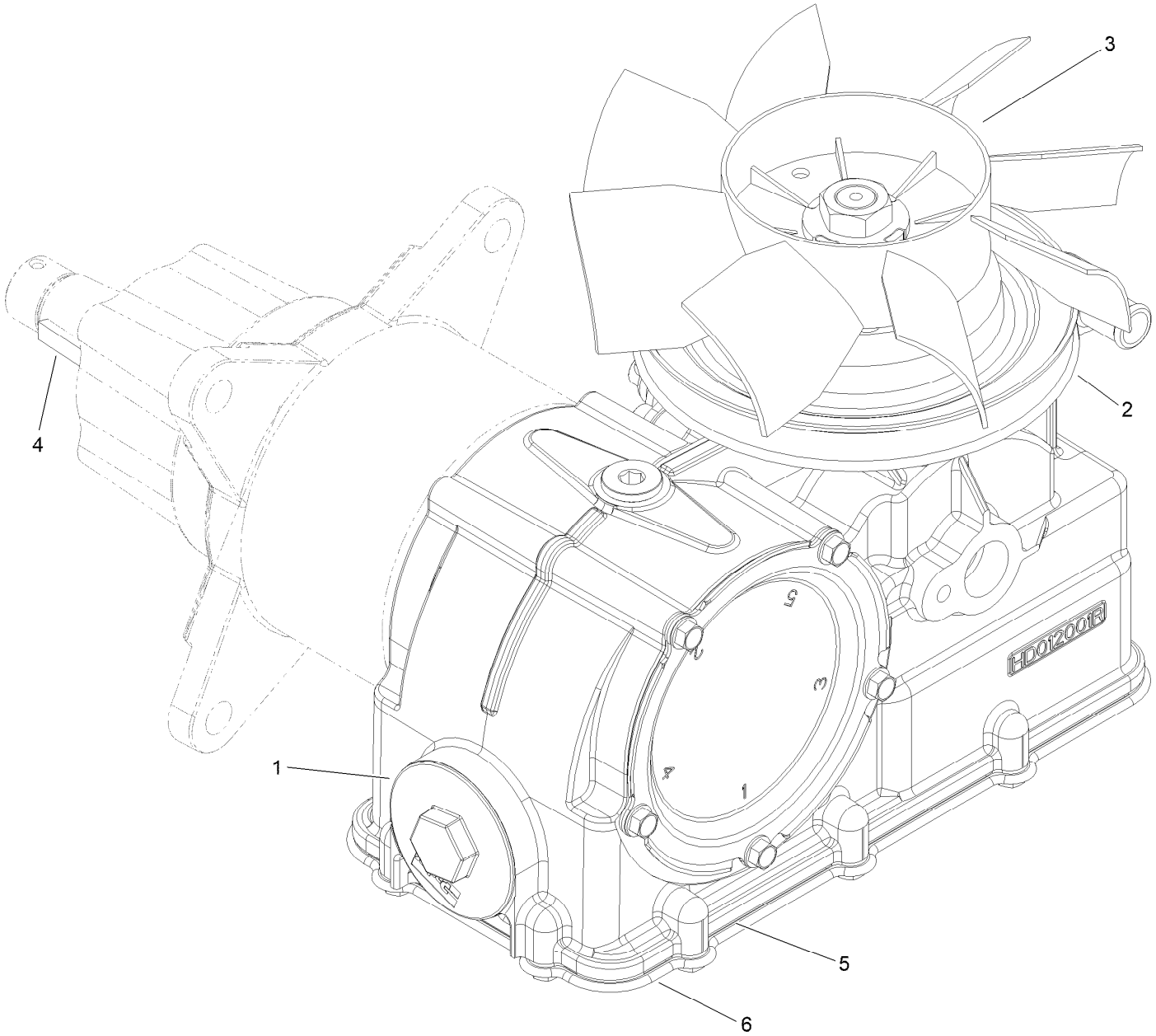

LH Hydro Transaxle Assembly No. 132-8802 (continued)

Ref.	Part Number	Qty.	Description
1	137-3772	1	Filter
2	137-3773	1	Pulley
3	137-3774	1	Fan (8.3 Inch)
4	3257-42	1	Key-Woodruff
5	140-1148	1	Gasket-Cover, Bottom
6	139-7233	1	Cover-Service
7	145-1155	1	Kit-Seal, Motor ●
8	145-1156	1	Seal-Shaft ●
9	145-1166	1	Rtn ASM (LH) ●

● Not illustrated

RH Hydro Transaxle Assembly No. 132-8803

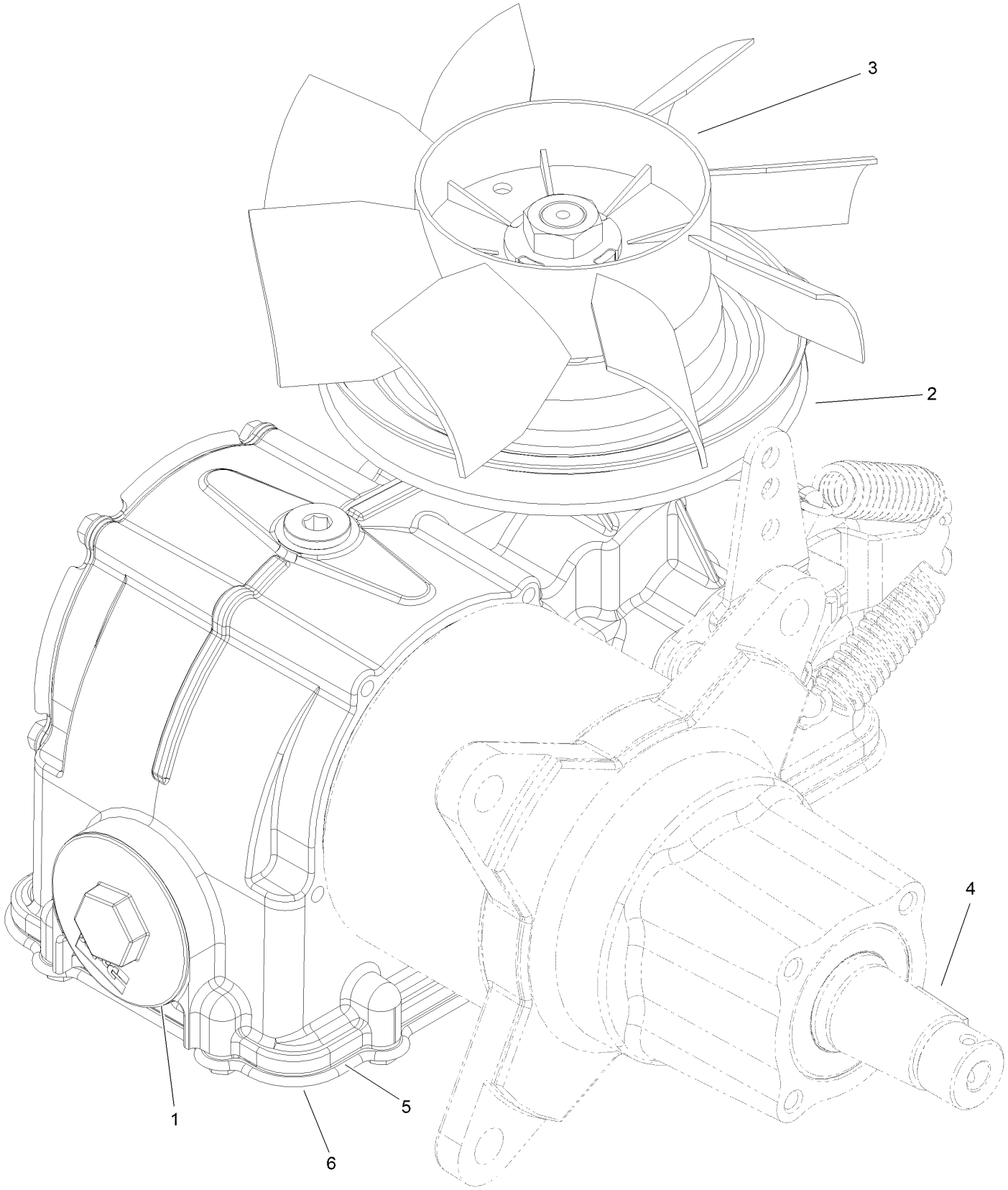

RH Hydro Transaxle Assembly No. 132-8803 (continued)

Ref.	Part Number	Qty.	Description
1	137-3772	1	Filter
2	137-3773	1	Pulley
3	137-3774	1	Fan (8.3 Inch)
4	3257-42	1	Key-Woodruff
5	140-1148	1	Gasket-Cover, Bottom
6	139-7233	1	Cover-Service
7	145-1155	1	Kit-Seal, Motor ●
8	145-1156	1	Seal-Shaft ●
9	145-1167	1	Rtn ASM (RH) ●

● Not illustrated

Hydraulic Cylinder Assembly No. 140-3558

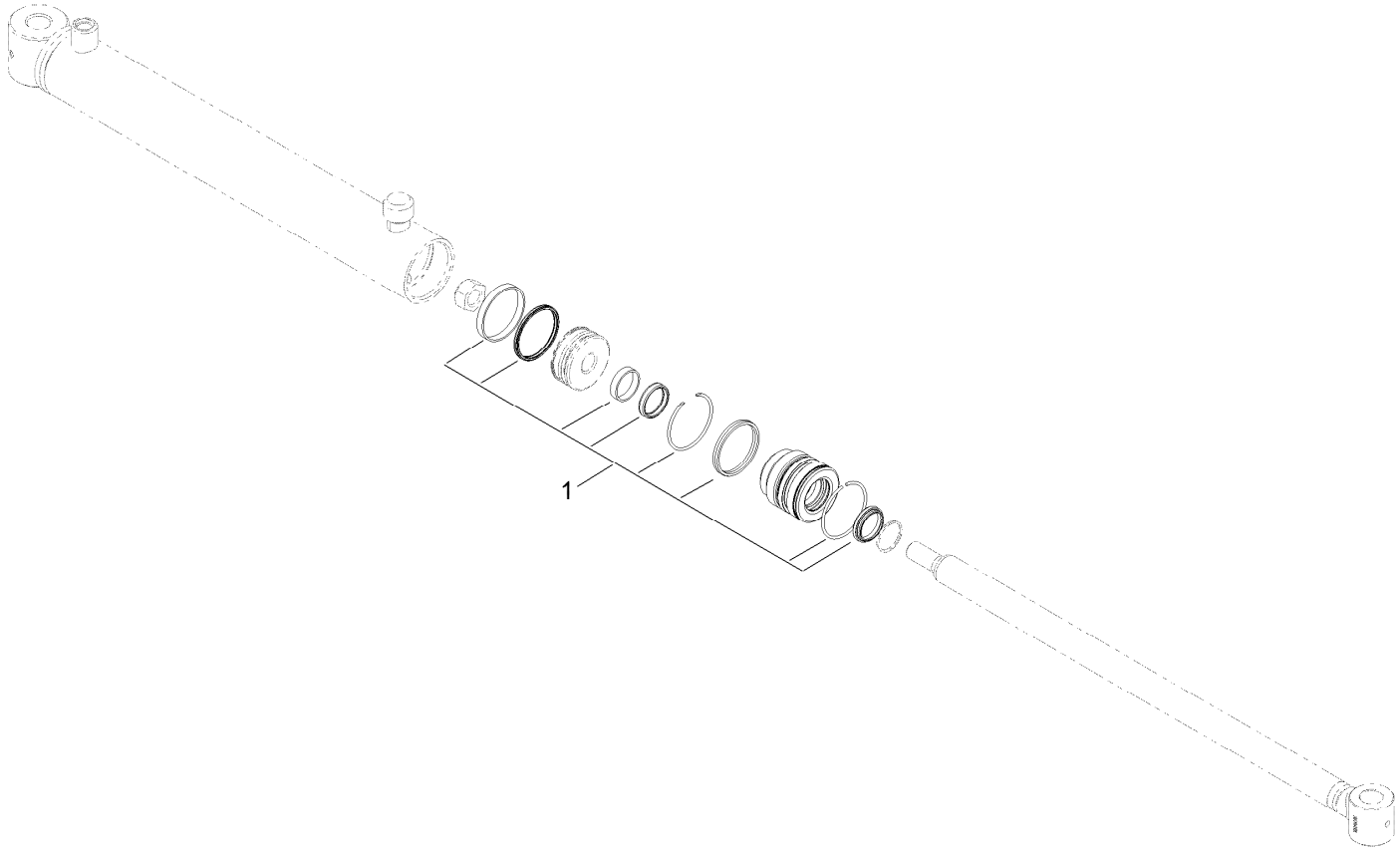

Hydraulic Cylinder Assembly No. 140-3558 (continued)

Ref.	Part Number	Qty.	Description
1	137-1813	1	Seal Repair Kit

Hydraulic Manifold Assembly

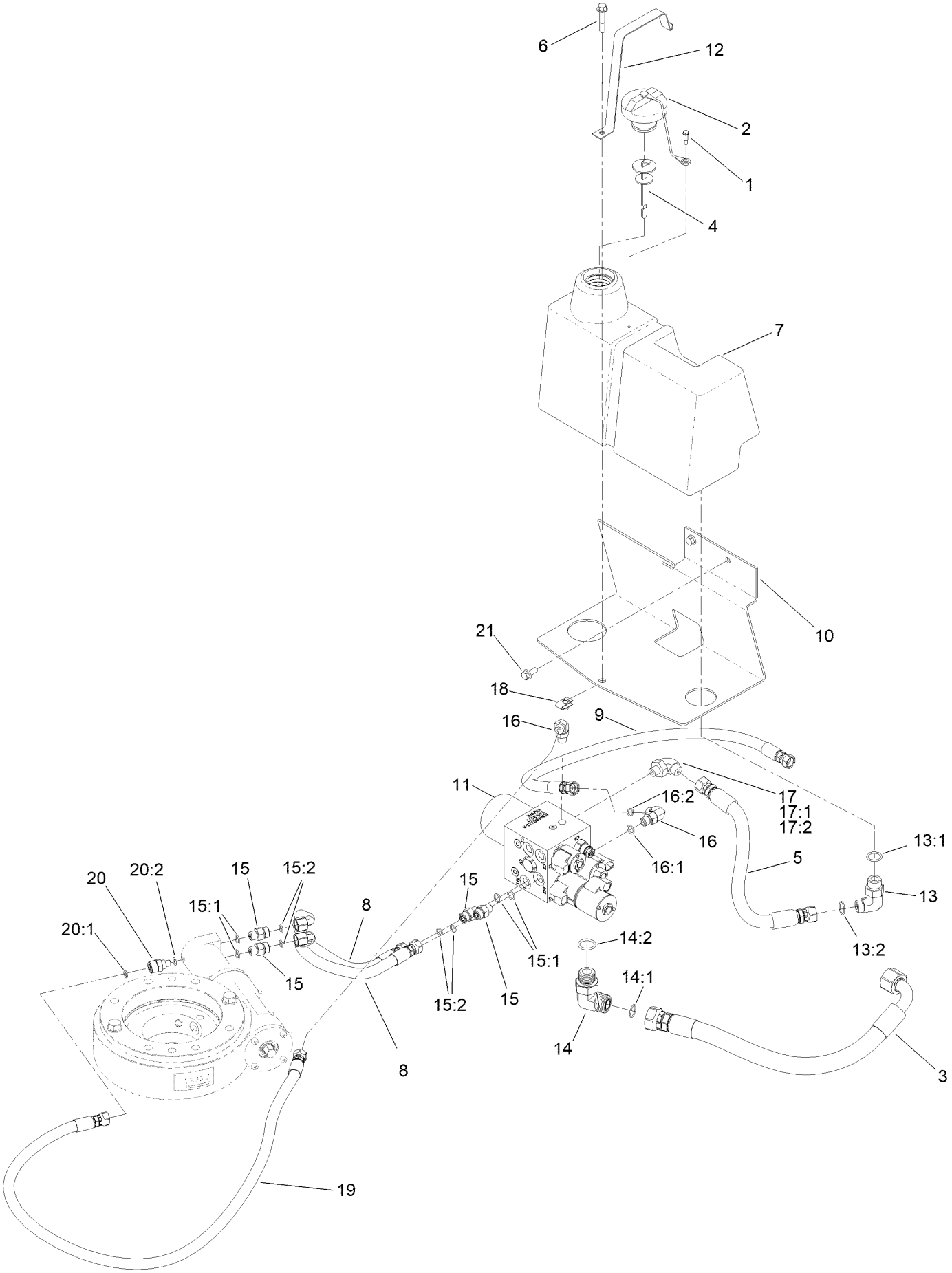

Hydraulic Manifold Assembly (continued)

Ref.	Part Number	Qty.	Description
1	57-5420	1	Screw-Shoulder
2	93-7160	1	Cap-Oil, HYD
3	100-5579	1	Hose ASM
4	106-8811	1	Dipstick ASM
5	117-0729	1	Hose ASM
6	94-5780	1	Screw-HWH
7	127-4162	1	Reservoir-Oil, HYD
8	144-7466	2	Hose ASM-HYD
9	133-2260	1	Hose ASM
10	140-3552-03	1	Support - Tank, HYD
11	140-3572	1	Manifold-Hydraulic ASM
12	140-7639-03	1	Strap-Hydraulic Tank
13	340-105	1	Fitting-Elbow, 90 DEG
13:1	237-80	1	O-Ring
13:2	237-30	1	O-Ring
14	340-142	1	Fitting-Elbow, 90 DEG
14:1	237-58	1	O-Ring
14:2	237-81	1	O-Ring
15	340-2	4	Fitting-Straight
15:1	237-22	1	O-Ring
15:2	237-42	1	O-Ring
16	340-77	2	Fitting-Elbow, 90 DEG
16:1	237-22	1	O-Ring
16:2	237-42	1	O-Ring
17	340-99	1	Fitting-HYD, 90 DEG
17:1	237-30	1	O-Ring
17:2	237-42	1	O-Ring
18	94-2413	1	Nut-U
19	144-7464	1	Hose ASM-HYD
20	98-1282	1	Adapter-HYD, Straight
20:1	237-22	1	O-Ring
20:2	237-118	1	O-Ring
21	3234-47	2	Screw-HHF

Manifold Assembly No 140-3572

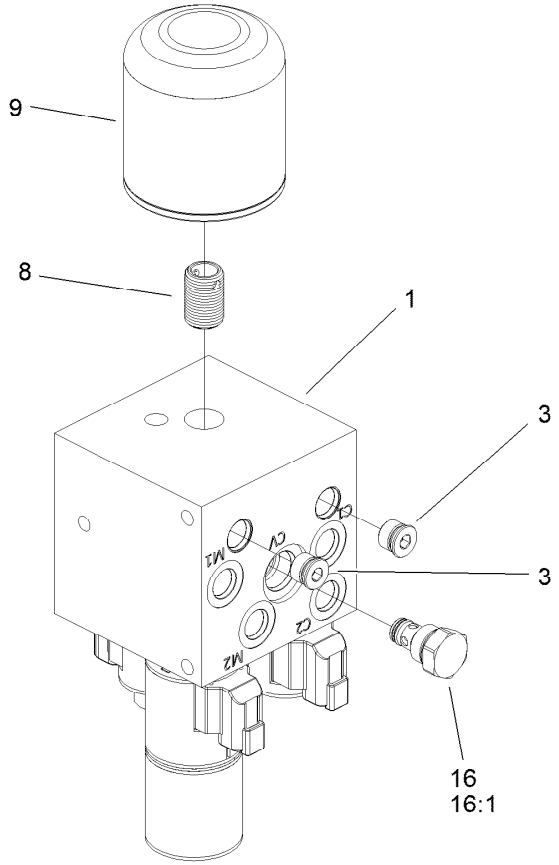

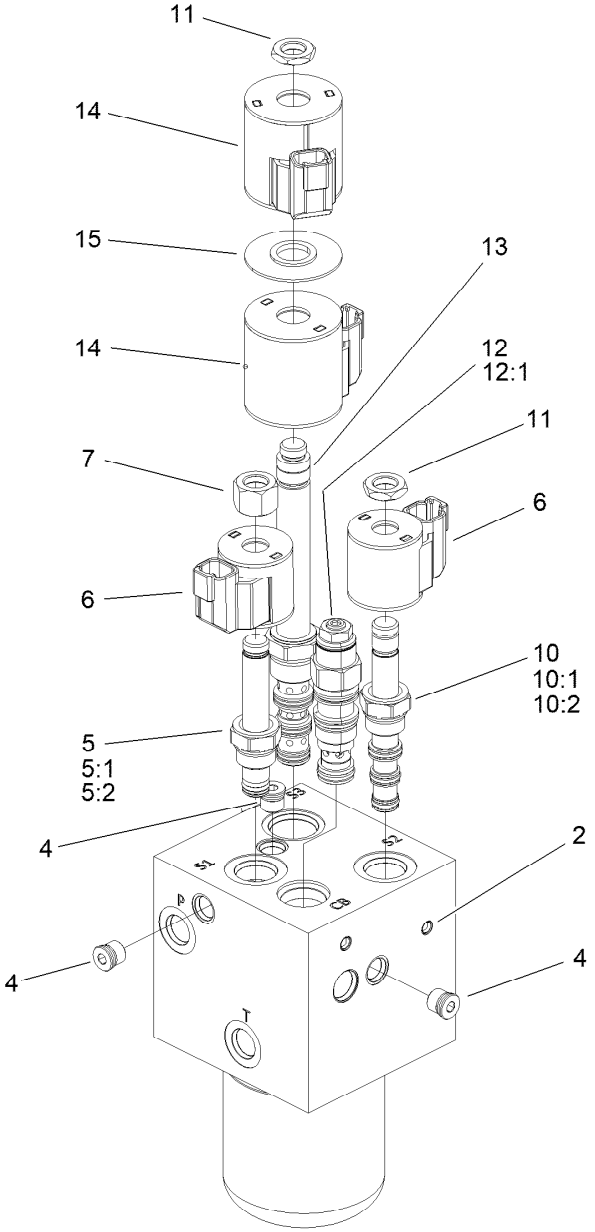

Manifold Assembly No 140-3572 (continued)

Ref.	Part Number	Qty.	Description
1		1	Manifold Block ●
2		1	Expander Plug ●
3	112-9213	2	Plug
4	112-9212	3	Plug
5	107-7517	1	Valve-Solenoid
5:1	105-9156	1	Seal Kit
5:2	107-7812	1	Nut-Solenoid
6	119-8036	2	Coil
7	107-7812	1	Nut-Solenoid
8	127-3885	1	Nipple-Filter
9	1-633750	1	Filter-Oil, HYD
10	120-1665	1	Valve-Solenoid
10:1	112-6520	1	Seal Kit
10:2	110-2634	1	Nut-Coil
11	110-2634	2	Nut-Coil
12	114-5082	1	Valve-Balance, Counter
12:1	114-5083	1	Seal Kit
13	139-7230	1	Valve-Solenoid
14	119-4619	2	Coil-Solenoid
15	117-8316	1	Spacer-E Coil
16	105-9321	1	Check Valve ASM
16:1	105-9156	1	Seal Kit

● Not serviced separately

Engine Assembly

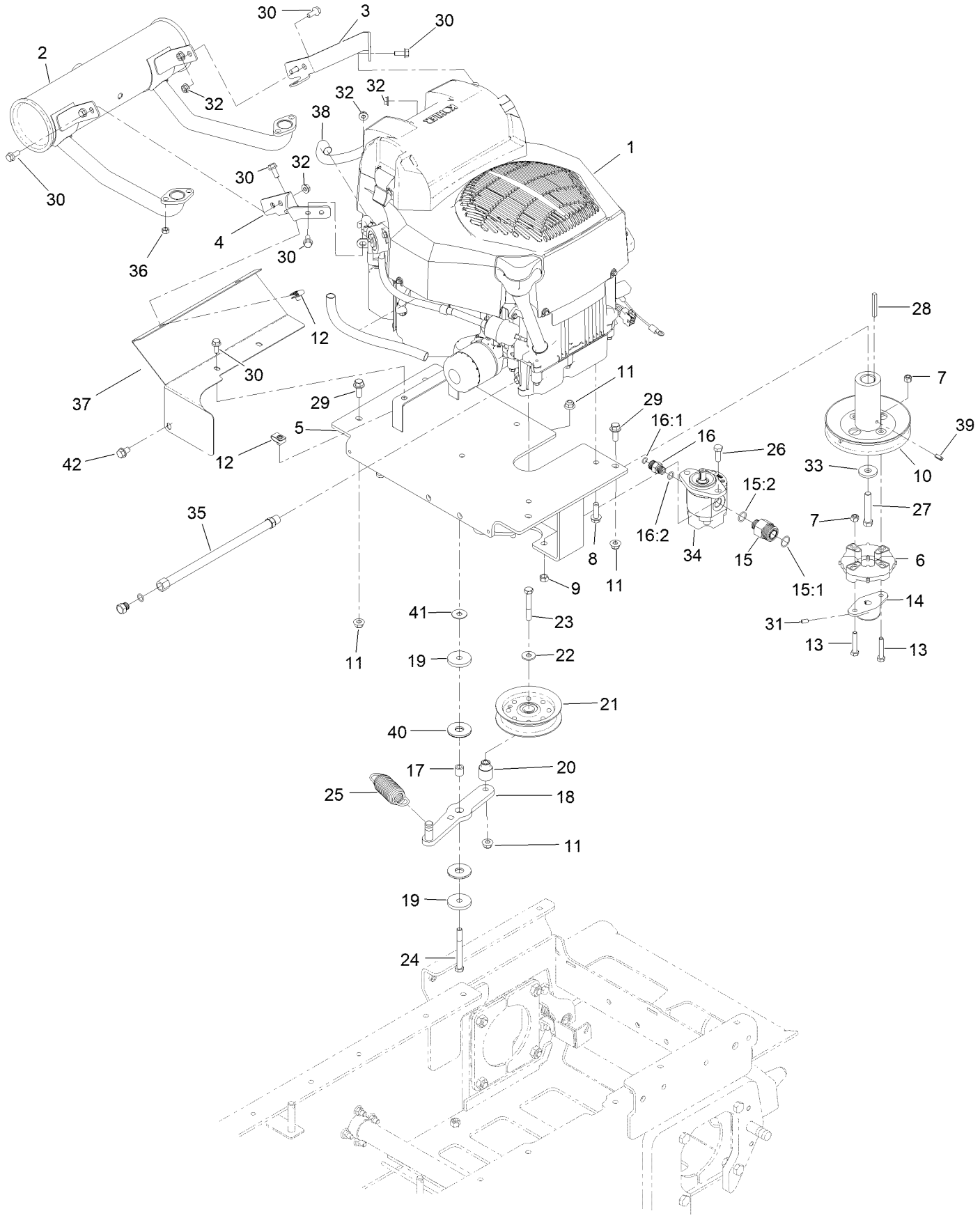

Engine Assembly (continued)

Ref.	Part Number	Qty.	Description
1	139-7245	1	Engine-Kohler, Zt740 [service]
2	132-8995	1	Muffler-Kohler
3	132-8916-03	1	Bracket-Muffler
4	132-8917-03	1	Bracket-Muffler
5	132-8907-03	1	Plate-Engine
6	119-0652	1	Coupler-Rubber
7	3296-29	4	Nut-Lock, NI
8	32144-109	4	Screw-Thd
9	125-5069	2	Nut-Hex
10	132-8938	1	Pulley-Engine
11	104-8301	6	Nut-HF, NI
12	115-7721	4	Nut-Clip, U
13	322-9	4	Screw-HH
14	132-9033	1	Hub-Pump
15	98-9921	1	Fitting-Straight
15:1	237-145	1	O-Ring
15:2	237-79	1	O-Ring
16	340-2	1	Fitting-Straight
16:1	237-22	1	O-Ring
16:2	237-42	1	O-Ring
17	75-5270	1	Spacer-Knob, Seat
18	132-9086-03	1	Arm-Idler
19	110-9981	2	Washer-Plain
20	132-9080	1	Bushing-Idler
21	116-3626	1	Pulley-Idler
22	80-6990	1	Washer-Hardened
23	323-12	1	Screw-HH
24	323-15	1	Screw-HH
25	138-7110	1	Spring-Extension
26	323-6	2	Screw-HH
27	3212-10	1	Screw-HH
28	103-4177	1	Key
29	3234-42	4	Screw-HHF
30	3234-47	12	Screw-HHF
31	3245-9	2	Screw-Set, HSH
32	32128-26	8	Nut-HF
33	110-6147	1	Washer-Flat
34	139-7183	1	Pump-Gear
35	117-1261	1	Hose-Drain, Oil
36	114-3549	4	Nut
37	139-7232-03	1	Shield-Muffler
38	136-4617	2	Sleeve-Thermal
39	32121-134	1	Pin-Roll
40	114-0463	2	Washer-Friction, Composite
41	119-4150	1	Washer-Flat
42	32144-15	2	Screw-HHFTF

Hydraulic Gear Pump Assembly No. 139-7183

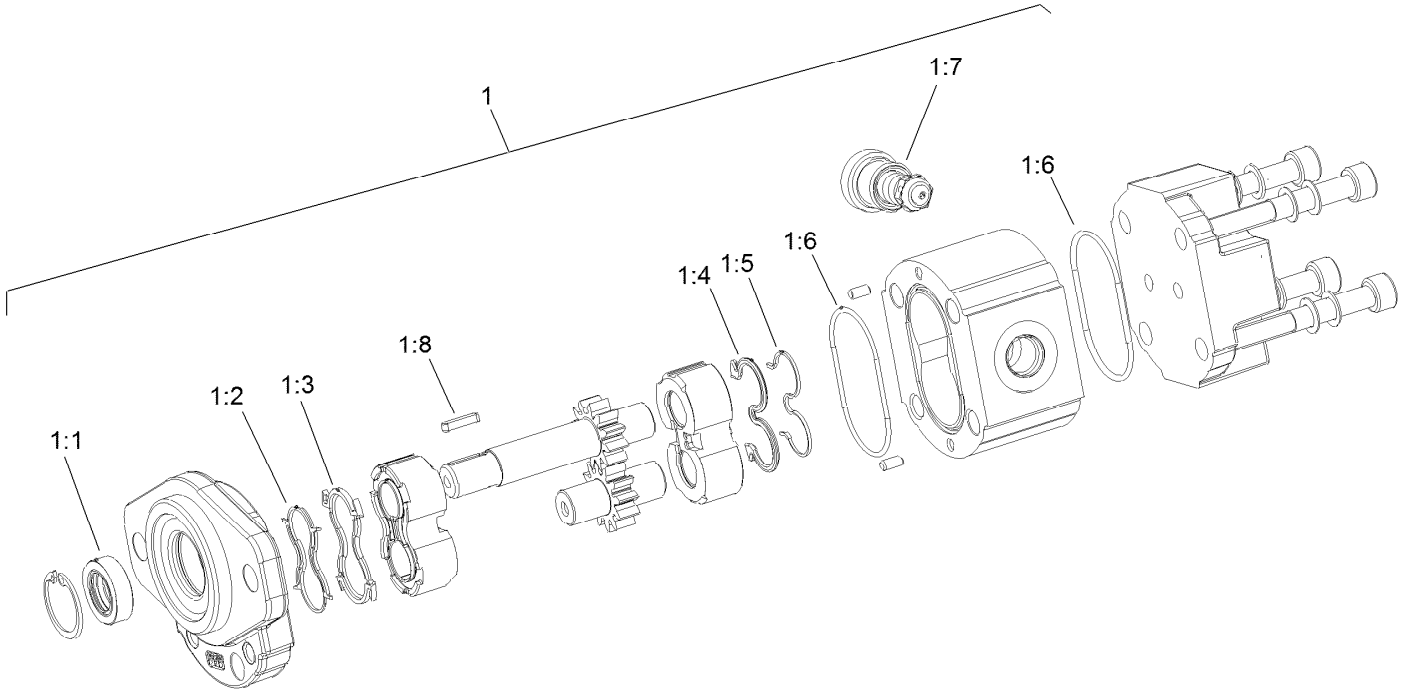

Hydraulic Gear Pump Assembly No. 139-7183 (continued)

Ref.	Part Number	Qty.	Description
1	132-8969	1	Seal-Kit
1:1		1	Shaft Seal ●
1:2		1	Anti Extrusion ●
1:3		1	Upper Seal ●
1:4		1	Seal ●
1:5		1	Anti Extrusion ●
1:6		2	O-Ring Seal ●
1:7		1	O-Ring Seal ●
1:8		1	Key ●

● Not serviced separately

Fuel Tank and Tower Assembly

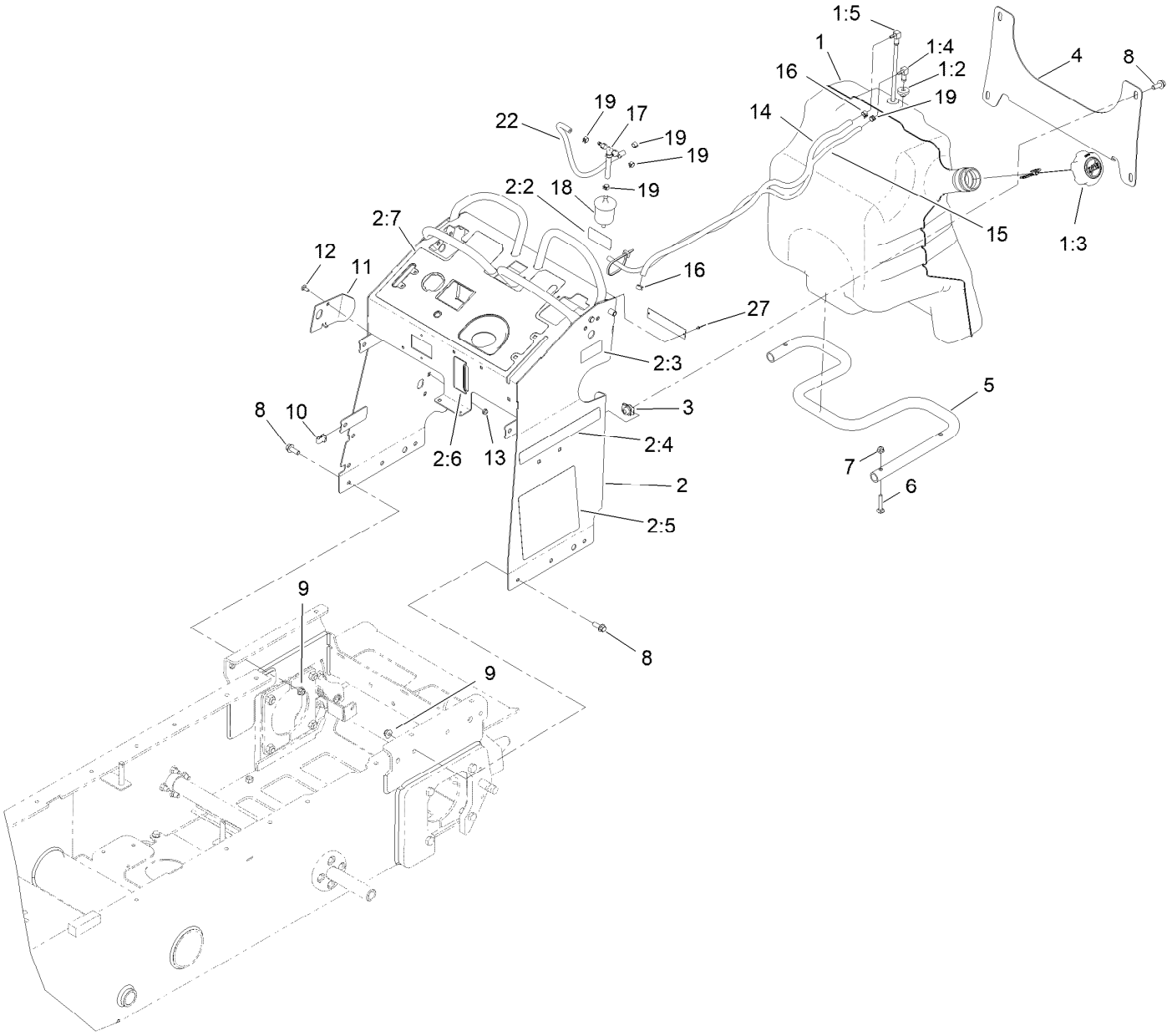

Fuel Tank and Tower Assembly (continued)

Ref.	Part Number	Qty.	Description
1	132-7560	1	Fuel Tank ASM
1:2	46-6560	2	Bushing
1:3	137-4127	1	Cap-Fuel
1:4	104-5228	1	Fitting-Elbow, 90 DEG
1:5	145-6195	1	ASM, Tube-Fuel
2	140-7621	1	Tower ASM- Swivel
2:2	132-9052	1	Decal-Fuse
2:3	116-8775	1	Decal-Fill, Fuel
2:4	139-7210	2	Decal
2:5	139-7223	1	Decal - Service, Mbtx-2500S
2:6	137-0575	1	Decal-Level, Oil
2:7	139-7202	1	Decal-Control Panel
3	105-4886	4	Nut-Tinnerman
4	132-1145-03	1	Bracket-Cross
5	132-5161-01	1	Tube-Mount, Fuel Tank
6	3230-5	3	Bolt-CARR
7	104-8300	3	Nut-HF, NI
8	3234-42	10	Screw-HHF
9	104-8301	6	Nut-HF, NI
10	115-7721	5	Nut-Clip, U
11	131-7455	1	Plate-Striker
12	3229-11	1	Screw-CARR
13	104-7201	1	Nut-HF, NI
14	132-8929	1	Hose-Fuel [32"]
15	110-3958	1	Hose-Fuel
16	2412-98	2	Clamp-Hose
17	116-5464	1	Tee And Check
18	120-2235	1	Filter-Fuel
19	2412-146	5	Clamp-Hose
22	132-9046	1	Hose-Vent
27	3269-29	2	Rivet-Pop

Track Assembly

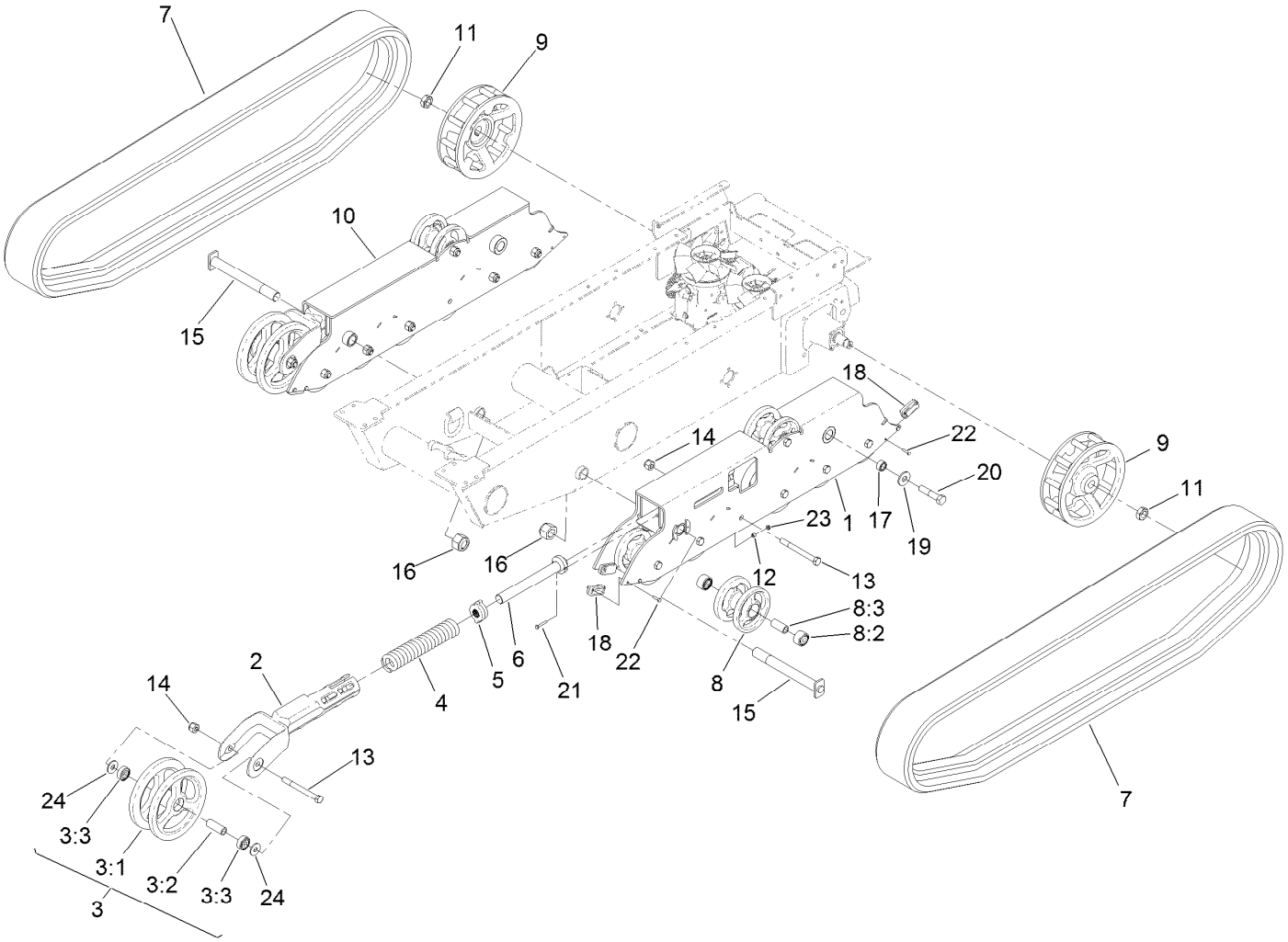

Track Assembly (continued)

Ref.	Part Number	Qty.	Description
1	132-8813-03	1	Mount-Wheel, LH
2	108-4691-03	2	Arm-Tensioner
3	104-5745	2	Tensioner Wheel ASM
3:1	104-5747-03	1	Wheel-Tensioner
3:2	98-9835	1	Spacer-Wheel, Tensioner
3:3	120-5378	2	Bearing-Ball
4	95-3624	2	Spring-Compression
5	108-4664	2	Block-Tensioner
6	127-9563	2	Bolt-Tensioner
7	137-8712	2	Track
8	138-5231	14	Wheel ASM
8:2	138-0547	2	Bearing-Ball
8:3	130-7564	1	Spacer-Wheel
9	132-8893-03	2	Wheel-Drive
10	132-8814-03	1	Mount-Wheel, RH

Ref.	Part Number	Qty.	Description
11	26-3790	2	Nut-Lock
12	98-4799	2	Spacer
13	327-17	16	Screw-HH
14	3296-24	16	Nut-Hex
15	130-1050	2	Pin-Track
16	125-0399	2	Nut-HH
17	132-8944	2	Spacer-Track, Outside Mount
18	132-6053	8	Block-Track
19	99-2659	2	Washer
20	328-5	2	Screw-HH
21	321-37	2	Screw-HH
22	321-6	16	Screw-HH
23	32128-32	2	Nut-HHF
24	3256-7	4	Washer-Flat

Hopper Assembly

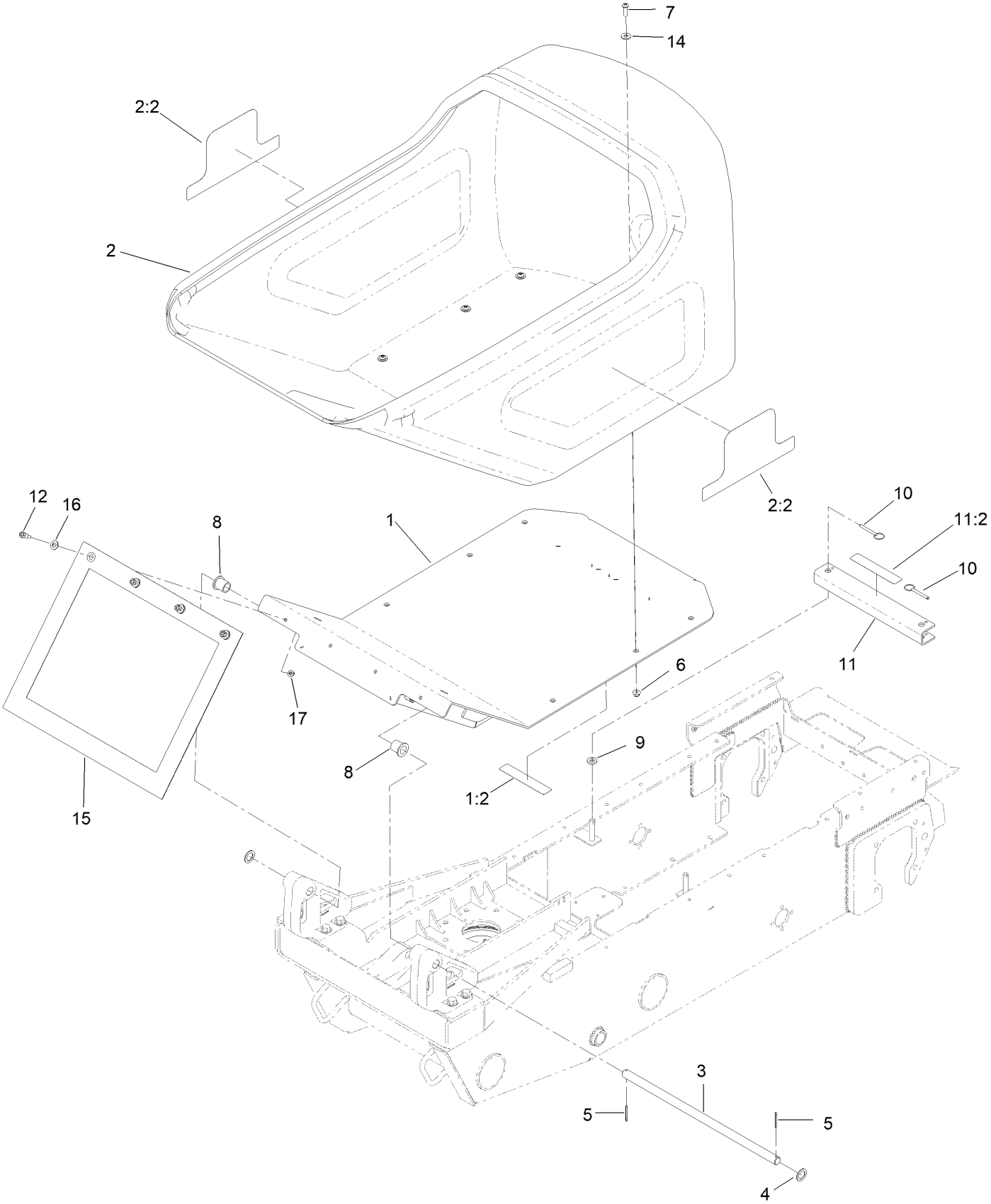

Hopper Assembly (continued)

Ref.	Part Number	Qty.	Description
1	140-3575	1	Hopper Base ASM (Service)
1:2	115-4858	2	Decal-Danger
2	139-7240	1	Hopper-Mortar, ASM
2:2	139-7234	2	Decal-Mud Buggy
3	132-8854	1	Shaft-Pivot,Tub
4	99-4958	2	Spacer
5	3272-13	2	Pin-Cotter
6	104-8301	6	Nut-HF, NI
7	3274-63	6	Screw-HSBH
8	1-303514	2	Bearing-Flanged
9	83-1470	2	Washer-Neoprene
10	108-0094	2	Pin-Cotterless
11	139-7203	1	Arm-Locking
11:2	115-4858	1	Decal-Danger
12	28-0540	4	Bolt-Shoulder
14	3256-4	6	Washer-Flat
15	132-9044	1	Shield-Splatter
16	3256-25	4	Washer-Flat
17	104-8300	4	Nut-HF, NI

Electrical Harness Assembly

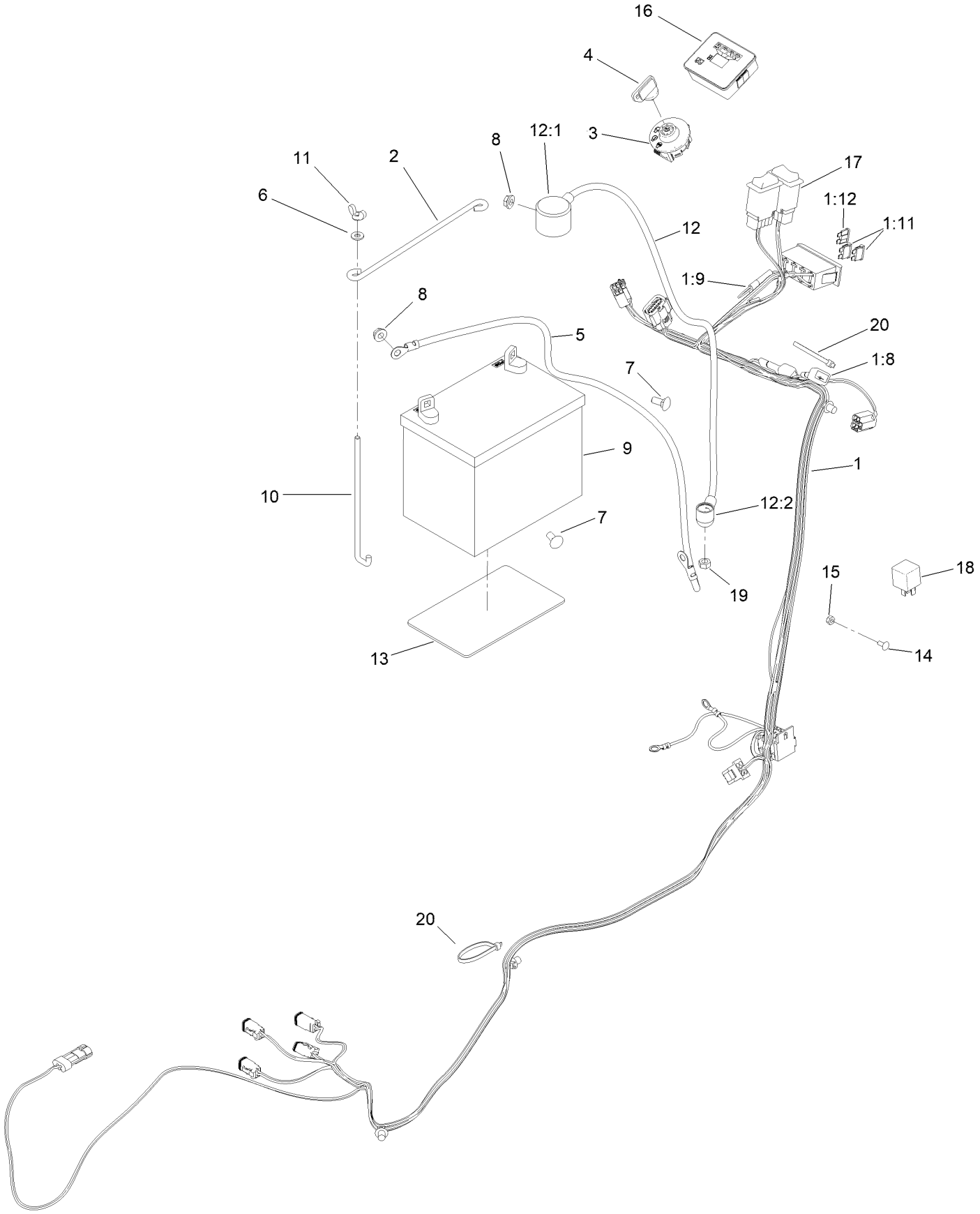

Electrical Harness Assembly (continued)

Ref.	Part Number	Qty.	Description
1	139-6385	1	Harness-Wire, Mud Buggy
1:8	100-4918	2	Diode
1:9	32180-416	1	Cap-Tethered
1:11	109355	2	Fuse-Blade, 15 Amp
1:12	114241	1	Fuse-Blade, 7.5 Amp
2	100-6434	1	Rod-Hold Down, Battery
3	137-4101	1	Switch-Ignition
4	63-8360	1	Key-Ignition
5	117-7240	1	Cable-Battery, Negative
6	3256-22	2	Washer-Flat
7	3230-1	2	Bolt-CARR
8	32128-20	2	Nut-HF
9	104-4657	1	Battery (340 CCA, Wet)

Ref.	Part Number	Qty.	Description
10	100-6435	2	Post-Battery
11	32103-22	2	Nut-Wing
12	109-7630	1	Positive Battery Cable ASM
12:1	109-2407	1	Insulator-Battery
12:2	1-543393	1	Insulator-Solenoid
13	62-4300	1	Pad-Skid, Anti
14	1-807513	1	Bolt-CARR
15	3296-2	1	Nut-Lock, NI
16	132-8959	1	Module, Hour Meter
17	AU113664	2	Switch-Rocker, 2 Pole
18	1-643275	1	Relay
19	33014-00	1	Nut-Hex
20	3290-378	3	Tie-Cable

Control Assembly

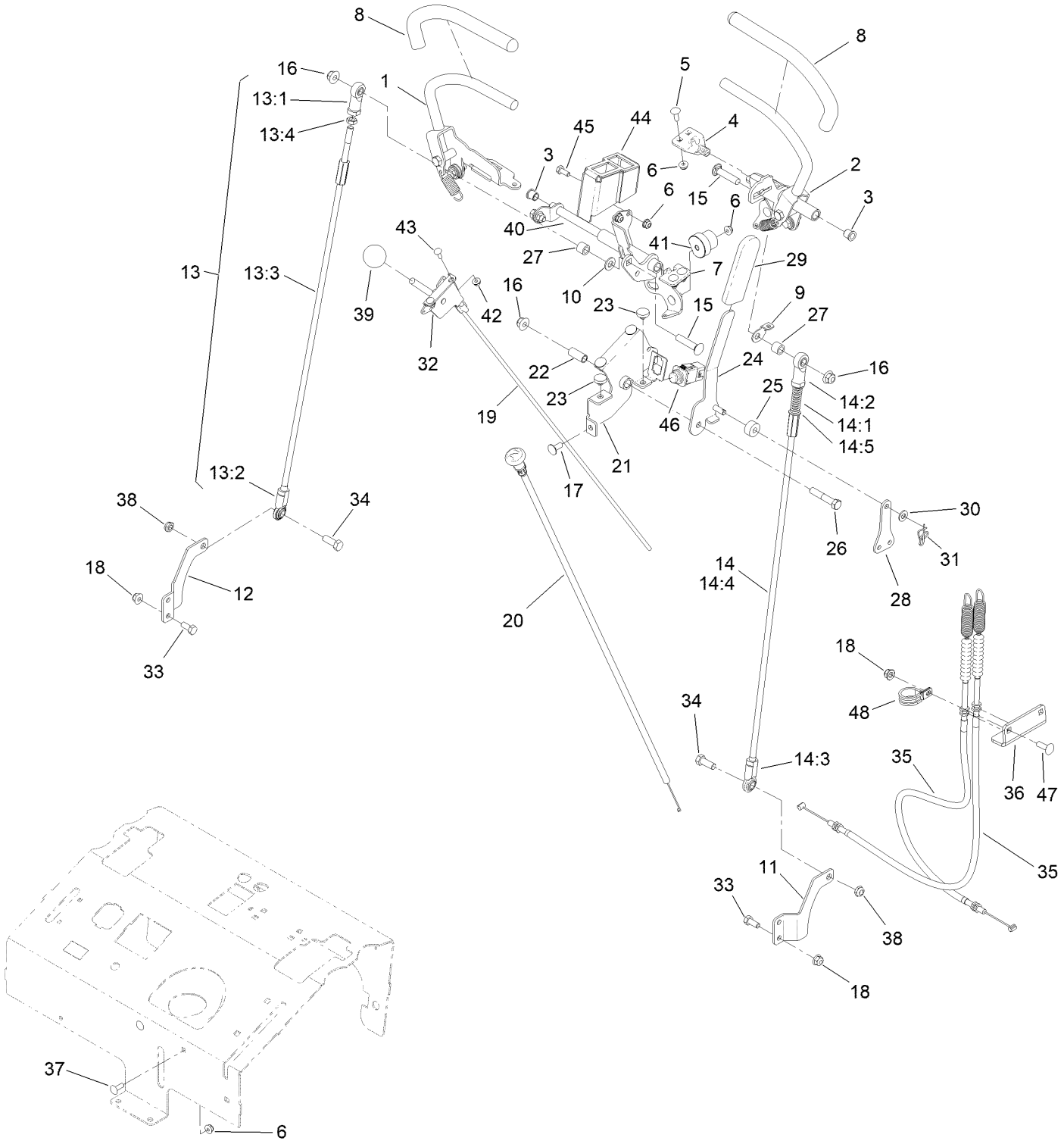

Control Assembly (continued)

Ref.	Part Number	Qty.	Description
1	132-9048	1	RH Control Handle ASM
2	132-9047	1	LH Control Handle ASM
3	103-9928	2	Bearing
4	120-3288	1	Tab-Pivot, LH
5	3229-1	4	Screw-CARR
6	104-7201	10	Nut-HF, NI
7	120-3287	1	Tab-Pivot, RH
8	119-0222	2	Grip
9	132-7538	1	Bracket-Adjustment, Speed
10	3256-24	1	Washer-Flat
11	131-5748-0P	1	Bracket-Hydro, LH (Primer)
12	131-5747-0P	1	Bracket-Hydro, RH (Black)
13	138-8642	1	RH Control Rod ASM
13:1	92-7008	1	End-Rod, Female
13:2	103-1167	1	Joint-Ball End, LH
13:3	138-8641	1	Rod-Control
13:4	3220-3	1	Nut-HJ
14	138-8643	1	LH Control Rod ASM
14:1	1-603807	1	Spring-Return, Neutral
14:2	92-7008	1	End-Rod, Female
14:3	103-1167	1	Joint-Ball End, LH
14:4	138-8641	1	Rod-Control
14:5	3256-45	2	Washer-Flat
15	3231-29	2	Screw-CARR
16	104-8301	3	Nut-HF, NI
17	3230-23	3	Bolt-CARR
18	104-8300	10	Nut-HF, NI
19	115-1211	1	Cable-Control
20	132-9035	1	Cable-Choke
21	132-8919-03	1	Bracket-Brake, Pivot
22	131-3562	1	Bearing-Sleeve
23	1-513658	2	Bumper
24	132-8920-03	1	Handle-Arm, Brake
25	132-9064	1	Bushing-Brake
26	323-10	1	Screw-HH
27	93-9847	2	Spacer
28	132-1188	1	Yoke-Cable
29	1-633268	1	Grip-Lever
30	93-6079	1	Spacer-Nylon
31	112-1491	1	Pin-Cotter
32	110-5547	1	Lever-Control
33	322-3	5	Screw-HH
34	323-6	2	Screw-HH
35	132-8921	2	Cable-Brake
36	132-8923-03	1	Bracket-Cable, Brake
37	3229-25	2	Screw-CARR
38	3296-59	2	Nut-Lock, NI
39	1-603175	1	Knob-Ball
40	132-9029-03	1	Pivot/Plate Switch ASM
41	126-1499	2	Cam
42	32128-17	2	Nut-Lock, Flange
43	1-807533	2	Bolt-CARR
44	145-1157-03	1	Bracket-Switch
45	321-3	2	Screw-HH
46	100-1268	1	Switch-Plunger
47	3230-22	2	Screw-CARR
48	2412-104	1	Clamp-R

Platform Assembly

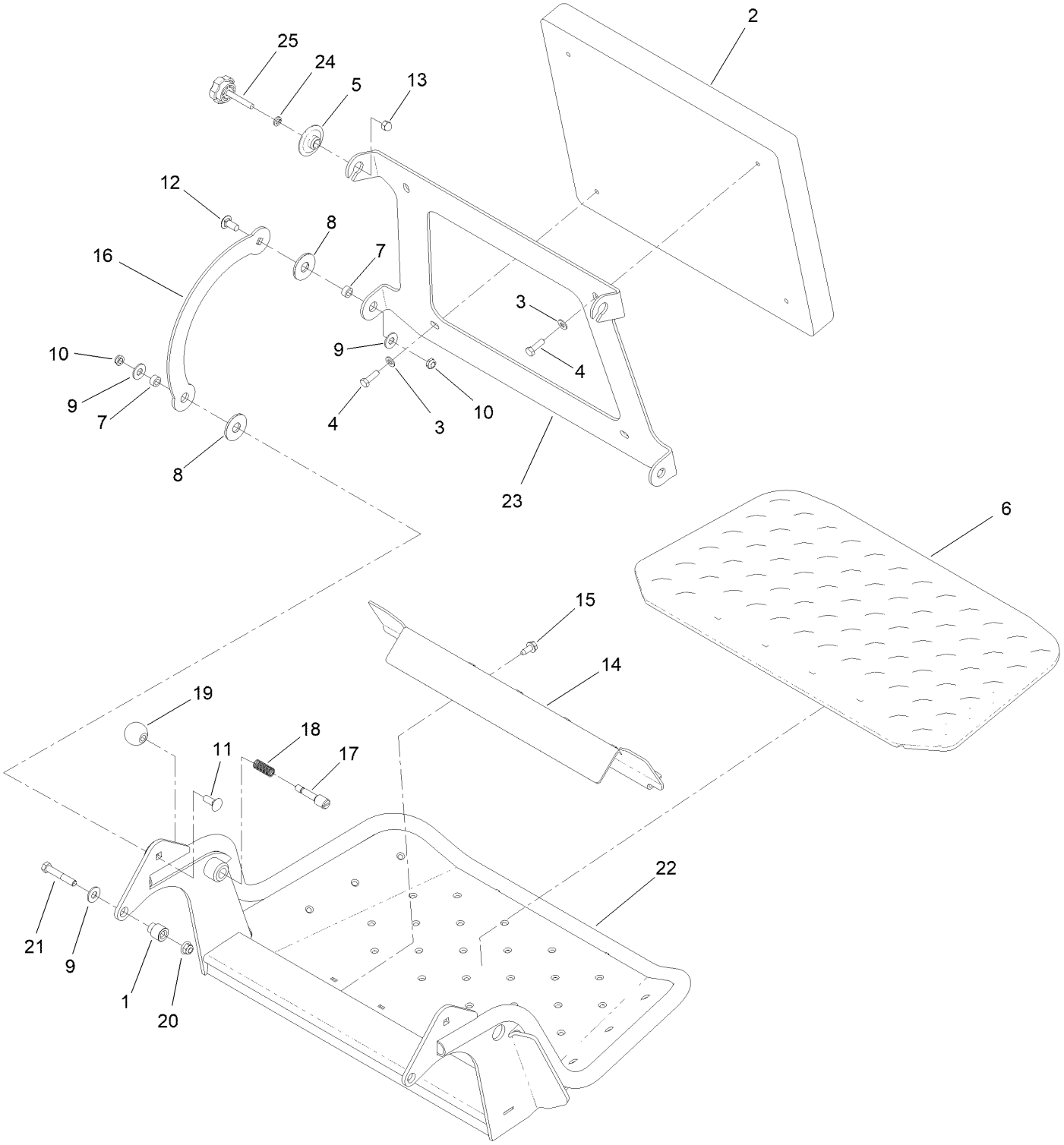

Platform Assembly (continued)

Ref.	Part Number	Qty.	Description
1	132-7583	2	Bushing-Flanged
2	117-9739	1	Pad-Cushion
3	3256-23	4	Washer-Plain
4	121-7999	4	Screw-HH
5	116-2886	2	Slide-Bushing
6	126-7157	1	Mat-Platform
7	111044	4	Spacer
8	114-0463	4	Washer-Friction, Composite
9	3256-4	6	Washer-Flat
10	3296-59	4	Nut-Lock, NI
11	3231-2	2	Bolt-CARR
12	3231-27	2	Screw-CARR
13	137-4808	2	Nut-Acorn
14	136-5669-03	1	Clamp-Shield
15	32144-70	2	Screw-HWHTF
16	114-1915-03	2	Link-Pad
17	119-8650	1	Pin-Latch
18	114-5348	1	Spring
19	1-603175	1	Knob-Ball
20	104-8301	2	Nut-HF, NI
21	323-11	2	Screw-HH
22	120-8475-03	1	Platform
23	120-8499-03	1	Hinge-Pad
24	3253-4	2	Washer-Lock
25	133-1426	2	Knob

Hood Assembly

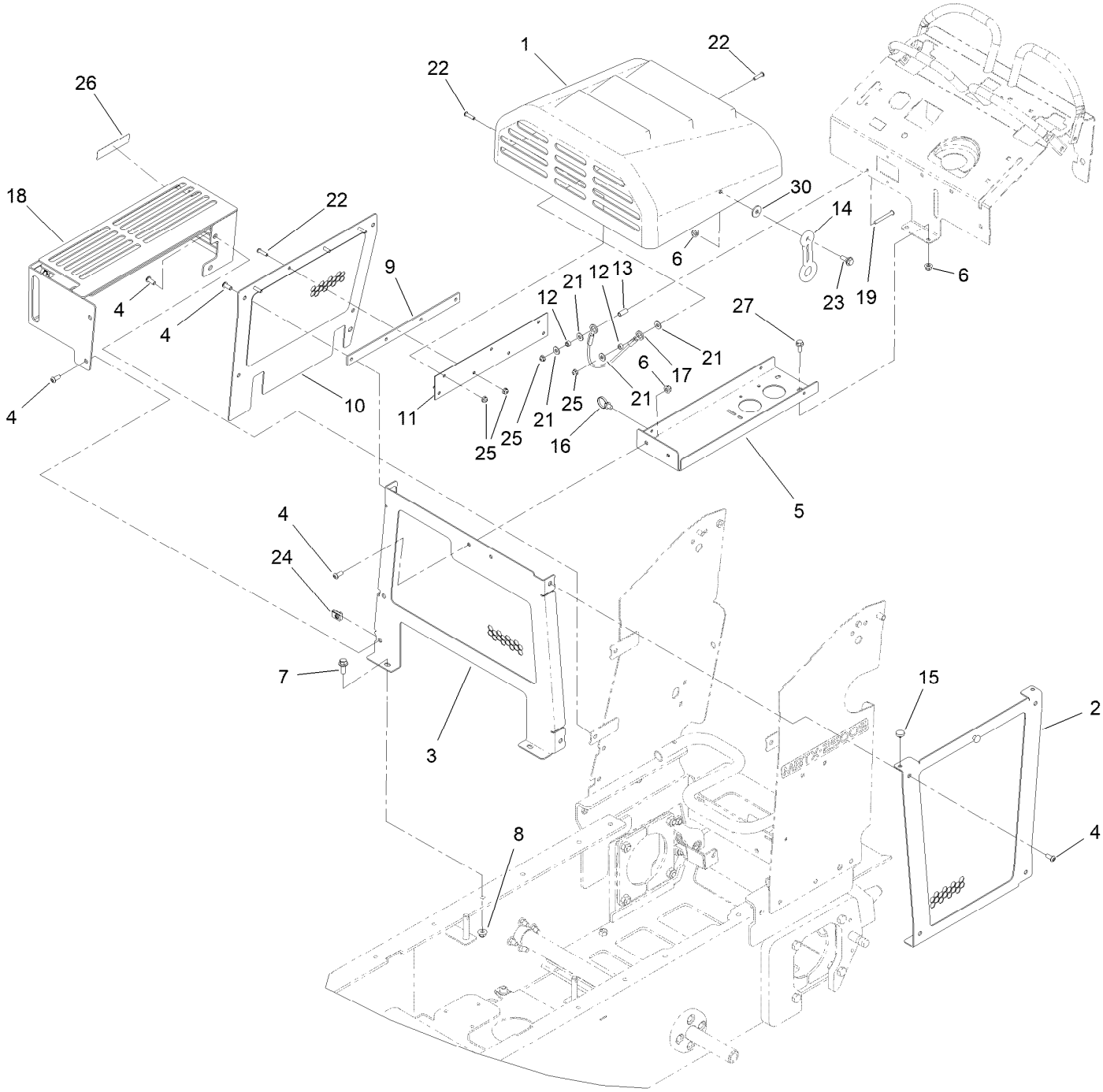

Hood Assembly (continued)

Ref.	Part Number	Qty.	Description
1	132-8990	1	Hood
2	132-8886-01	1	Panel-Side, LH
3	138-8619-01	1	Panel-Front (Welded)
4	3274-55	14	Screw-HSBH
5	132-8876-03	1	Platform-Battery
6	104-8300	5	Nut-HF, NI
7	3234-42	2	Screw-HHF
8	104-8301	2	Nut-HF, NI
9	132-9050-03	1	Plate-Spacer, Hood
10	132-3905-01	1	Panel-Side, Upper
11	132-9021	1	Hinge-Hood
12	55-9370	2	Spacer-Blade, Rotor
13	87-4710	1	Spacer-Brake, Parking
14	ST47182	1	Latch-Rubber
15	1-513658	2	Bumper
16	32180-118	2	Clip-Tie
17	130-5726	1	Lanyard
18	136-4592-01	1	Guard-Muffler
19	120-2011	1	Screw-HSBH
21	3256-2	4	Washer-Flat
22	3274-65	8	Screw-HSBH
23	116-2670	1	Screw-Shoulder
24	115-7721	6	Nut-Clip, U
25	104-7201	9	Nut-HF, NI
26	133-8062	1	Decal-Arrestor, Spark
27	3234-47	2	Screw-HHF
30	115-7109	1	Washer-Flat

Attachments and Accessories

For 68141 MB TX 2500S Tracked Mud Buggy

Product Name	Model/Part
Light Kit	137-0558
Kit-Hopper, Mortar	139-7216
Toro Red 12oz Aerosol Can	361-10
New Red Paint - Gallon	361-11
Semi-Gloss Black Spray Paint	361-9
Spark Arrestor	98-9099

Notes:

Notes:

Notes:

TORO®

Count on it.