Form No. 3453-541 Rev A

TORO®

Count on it.

Parts Catalog

Reelmaster® 5010-H

Traction Unit

Model No. 03674—Serial No. 412200000 and Up

Register at www.Toro.com.
Original Instructions (EN)

CE

3453-541 A

Ordering Replacement Parts

To order replacement parts, please supply the part number, the quantity, and the description of each part desired.

Understanding Reference Numbers

Each identified part in an illustration has a reference number. The reference number for a part also appears in the parts list, along with other information about the part.

This catalog uses two special reference number formats, one to indicate parts in a service assembly and another to indicate the quantity of a given part in an illustration.

Service Assembly Reference Numbers

Parts in service assemblies have reference numbers in the form a:b. The a represents the reference number of the entire service assembly and the b represents a sequential number unique to each part within the service assembly.

For example, a wheel assembly might be identified by reference number 6, the tire by 6:1, the valve by 6:2, and the wheel by 6:3. When you order the assembly identified by reference number 6, you receive all parts identified by reference numbers 6:1,6:2, and 6:3. However, you may also order any part individually. Reference numbers of this type appear in illustration and in parts lists.

Reference Numbers Indicating Quantity

In an illustration, if a reference number indicates more than one part, the reference number has the form nX y. The n represents the quantity of the part, the X is the multiplication symbol, and the y represents the reference number.

For example, in an illustration, the reference number 2X 37 means that two of the parts identified by reference number 37 are indicated.

Contents

Frame Assembly . . . 5
Operator Platform and Front Shroud Assembly . . . 6
Control Pedal Assembly . . . 7
Steering Assembly . . . 9
Steering Tilt Column Assembly No. 106-3622 . . . 10
Steering Valve Assembly No. 106-3621 . . . 11
Control Arm Assembly . . . 12
Joystick Bracket Assembly No. 120-5280 . . . 14
Front Axle Assembly . . . 15
LH Brake Assembly No. 139-5952 . . . 16
RH Brake Assembly No. 139-5951 . . . 17
Rear Axle Assembly . . . 18
Tie Rod Assembly No. 139-6029 . . . 19
Hub and Spindle Assembly No. 117-8961 . . . 20
No. 1, 4 and 5 Lift Arm Assembly . . . 21
No. 2 and 3 Lift Arm Assembly . . . 23
Battery Mounting Assembly . . . 24
Control Console Electrical Assembly . . . 25
Gear Pump Assembly . . . 26
Tandem Gear Pump Assembly No. 125-1530 . . . 27
Seat Base Assembly . . . 28
Hood Assembly . . . 29
Radiator Assembly . . . 30
Fuel System Assembly . . . 32
Hydraulic Tank Assembly . . . 33
Seat Mounting Assembly . . . 34
Seat Assembly No. 139-2700 . . . 35
Mechanical Seat Suspension Assembly No. 110-8851 . . . 36
Traction Pump Mounting Assembly . . . 37
Hydraulic Pump Assembly No. 119-6972 . . . 38
Traction Hydraulic Assembly . . . 40
Hydraulic Motor Assembly No. 133-2935 (CCW) . . . 41
Hydraulic Motor Assembly No. 133-2934 (CW) . . . 42
Front Lift Hydraulic Assembly . . . 43
Hydraulic Cylinder Assembly No. 138-6999 . . . 44
Hydraulic Cylinder Assembly No. 119-6987 . . . 45
Hydraulic Manifold Block Assembly No. 105-7577 . . . 46
Rear Lift Hydraulic Assembly . . . 47
Steering Hydraulic Assembly . . . 48
Hydraulic Cylinder Assembly No. 110-9035 . . . 50
Engine, Air Cleaner and Muffler Assembly . . . 52
Air Cleaner Assembly No. 106-5277 . . . 54
48 Volt Battery Assembly . . . 55
48 Volt Contactor Assembly . . . 56
Reel Motor Plumbing Assembly . . . 57
Wire Harness Assembly . . . 58
Generator Assembly . . . 59
Generator/Controller Assembly No. 127-2655 . . . 60
Generator Assembly No. 127-2653 . . . 61
Drive Shaft Assembly No. 125-1191 . . . 62
Crankcase Assembly . . . 63
Oil Pan and Dipstick Assembly . . . 64
Cylinder Head Assembly . . . 65
Gear Case and Oil Filter Cartridge Assembly . . . 66

© 2022—The Toro® Company

8111 Lyndale Avenue South
Bloomington, MN 55420

Contact us at www.Toro.com.
Printed in the USA.

All Rights Reserved

Contents (continued)

Cylinder Head Cover Assembly 67
Main Bearing Case Assembly 68
Camshaft and Idle Gear Shaft Assembly 69
Piston and Crankshaft Assembly 70
Fuel Camshaft and Governor Shaft Assembly 71
Idle Apparatus Assembly 72
Injection Pump Assembly 73
Governor Assembly 74
Speed Control Plate Assembly 75
Nozzle Holder and Glow Plug Assembly 76
Nozzle Holder Assembly 77
Cover Assembly 78
Alternator, Pulley and Fan Assembly 79
Alternator Assembly No. 131-6557 80
Starter and Flywheel Assembly 81
Starter Assembly No. 131-6561 82
Water Flange and Thermostat Assembly 83
Water Pump Assembly 84
Valve and Rocker Arm Assembly 85
Inlet and Exhaust Manifold Assembly 86
Miscellaneous Engine Parts 87
Attachments and Accessories 88

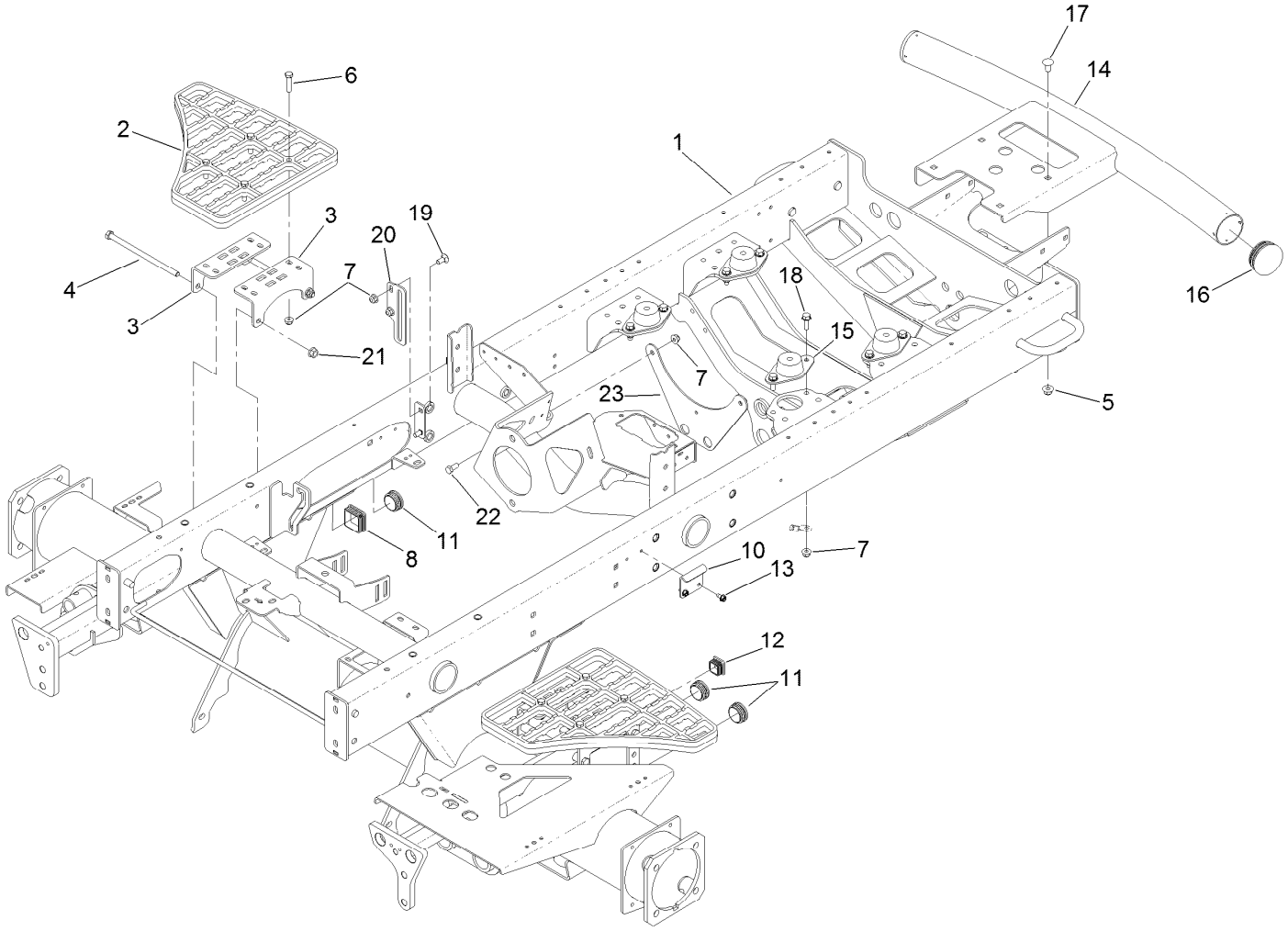

Frame Assembly

Ref.	Part Number	Qty.	Description
1	125-1531	1	Frame ASM
2	110-9041	2	Step-Aluminum
3	127-2697-01	4	Bracket-Step
4	323-36	4	Screw-HH
5	104-8301	4	Nut-HF, NI
6	322-17	8	Screw-HH
7	104-8300	20	Nut-HF, NI
8	95-9495	1	Cap
10	110-8972	1	Hook-Latch
11	110-9012	3	Caplug
12	110-9013	1	Caplug

Ref.	Part Number	Qty.	Description
13	32104-17	2	Screw-HWH
14	110-8951-03	1	Bumper
15	120-6274	4	Mount-Engine
16	2410-42	2	Cap-End
17	3231-21	4	Screw-CARR
18	3234-29	8	Screw-HHF
19	3230-1	2	Bolt-CARR
20	108-7584-01	1	Plate-Guide, Rod
21	32128-21	4	Nut-HF Lock
22	322-3	2	Screw-HH
23	127-2455-01	1	Bracket-Bulkhead

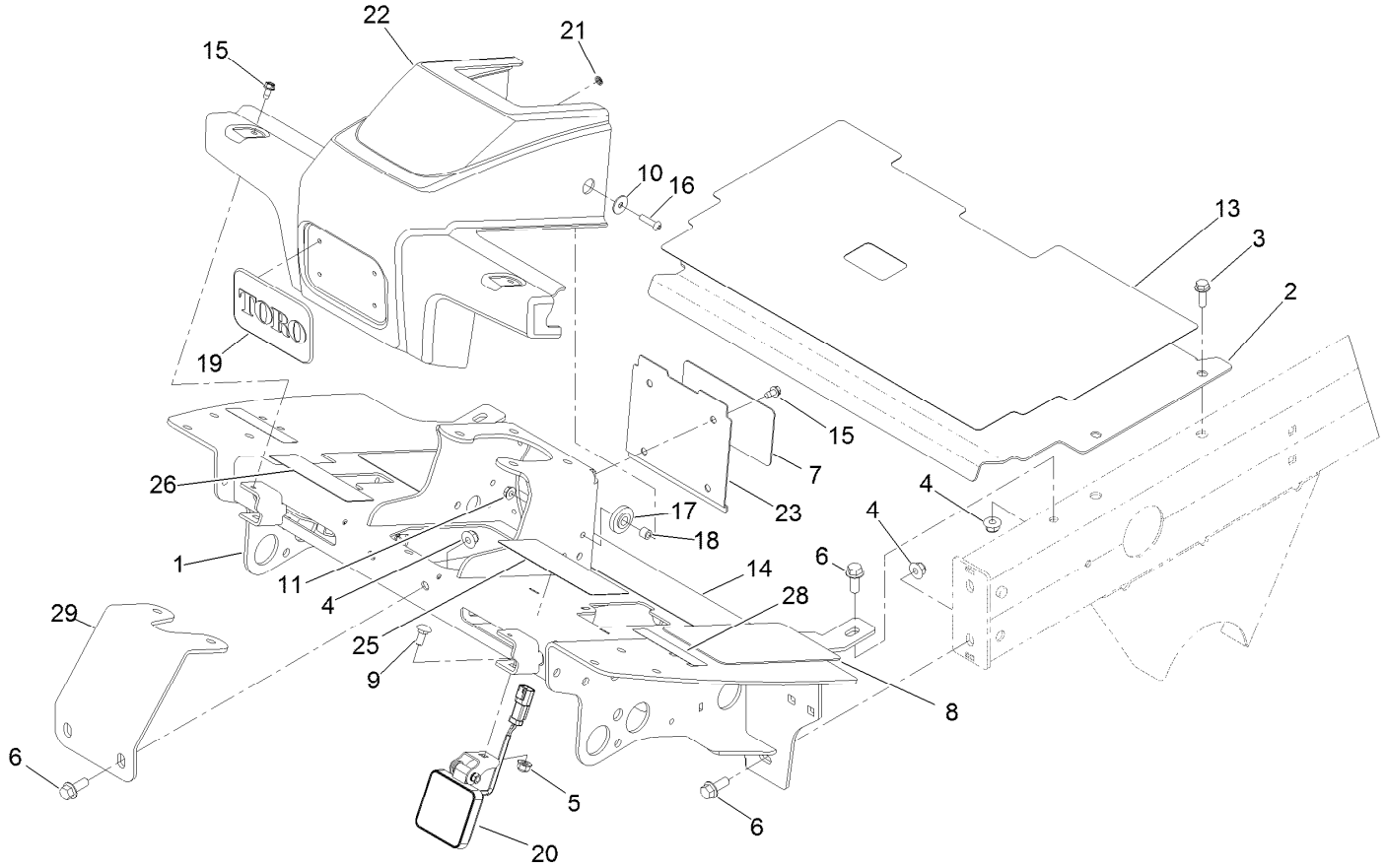

Operator Platform and Front Shroud Assembly

Ref.	Part Number	Qty.	Description
1	127-2310-01	1	Platform ASM
2	115-8064-01	1	Plate-Floor
3	3234-17	4	Screw-HHF
4	104-8301	6	Nut-HF, NI
5	104-8300	2	Nut-HF, NI
6	3234-11	6	Screw-HHF
7	110-0986	1	Decal-Plate, Cover
8	125-2910	2	Tread-Floor, Side
9	3230-1	2	Bolt-CARR
10	87-6630	2	Washer-Plain
11	32128-33	2	Nut-HF
13	125-2911	1	Tread-Panel, Service
14	125-2909	1	Tread-Floorboard
15	32104-17	6	Screw-HWH

Ref.	Part Number	Qty.	Description
16	106-9518	2	Screw-PRH
17	240-11	2	Bushing-Flange
18	66-8010	2	Spacer
19	93-6028	1	Plate-Logo
20	140-6990	2	Light-Work, LED
21	138-6996	4	Nut-Push
22	110-0944	1	Shroud-Platform
23	110-0947-03	1	Plate-Cover
25	133-2930	1	Decal-Danger
25	133-2931	1	Decal-Danger (CE)
26	110-8921	1	Decal-Speed, Mow
28	133-8062	1	Decal-Arrestor, Spark
29	110-8876-0P	1	Brace-Column

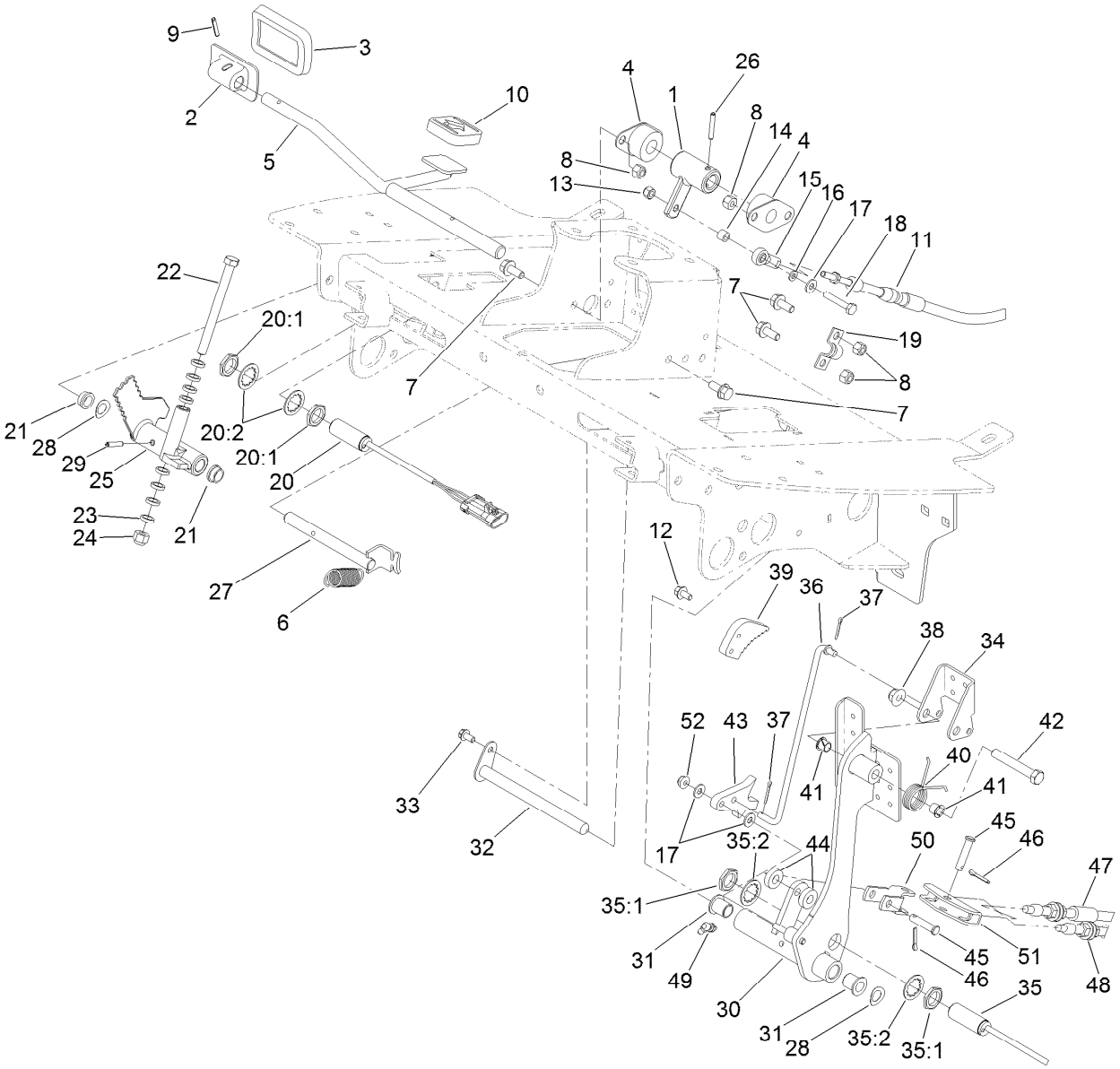

Control Pedal Assembly

Ref.	Part Number	Qty.	Description
1	117-5199	1	Hub-Pedal, Traction
2	117-9507	1	Pedal-Accelerator
3	74-9100	1	Pad-Pedal, Forward
4	256-236	2	Bearing-Mount, Flange
5	106-3840	1	Pedal-Traction
6	92-7305	1	Spring-Extension
7	3234-5	6	Screw-HHF
8	3296-29	6	Nut-Lock, NI
9	32121-45	1	Pin-Spring
10	74-9110	1	Pad-Pedal, Reverse
11	125-1466	1	Traction Cable ASM
12	3234-13	2	Screw-HHF
13	3296-42	1	Nut-Lock, NI
14	66-8010	1	Spacer
15	2411-41	1	Rod End-Ball Joint
16	33093-00	1	Washer-Flat
17	3256-22	3	Washer-Flat
18	321-9	1	Screw-HH
19	93-2092	1	Clamp-Cable
20	115-0282	1	Proximity Sensor ASM
20:1	117-3207	2	Nut-Hex

Ref.	Part Number	Qty.	Description
20:2	117-3208	2	Washer-Lock, Internal Tooth
21	256-156	2	Bushing-Flange
22	323-17	1	Screw-HH
23	62-4420	8	Washer
24	3296-39	1	Nut-Lock, NI
25	117-8066	1	Mow-Stop
26	32121-6	1	Pin-Roll, Slotted
27	106-3731	1	Rod-Pivot
28	110-8982	2	Washer-Spring
29	32121-16	1	Pin-Spring
30	115-0120-03	1	Pedal-Brake
31	125-8775	2	Bushing-Flange
32	104-7179	1	Pivot-Pedal
33	32144-4	1	Screw-HWH
34	99-7963-03	1	Pedal-Park
35	115-5300	1	Proximity Switch ASM
35:1	117-3207	2	Nut-Hex
35:2	117-3208	2	Washer-Lock, Internal Tooth
36	115-0129	1	Rod-Pawl, Brake
37	3272-6	2	Pin-Cotter
38	104-8301	1	Nut-HF, NI

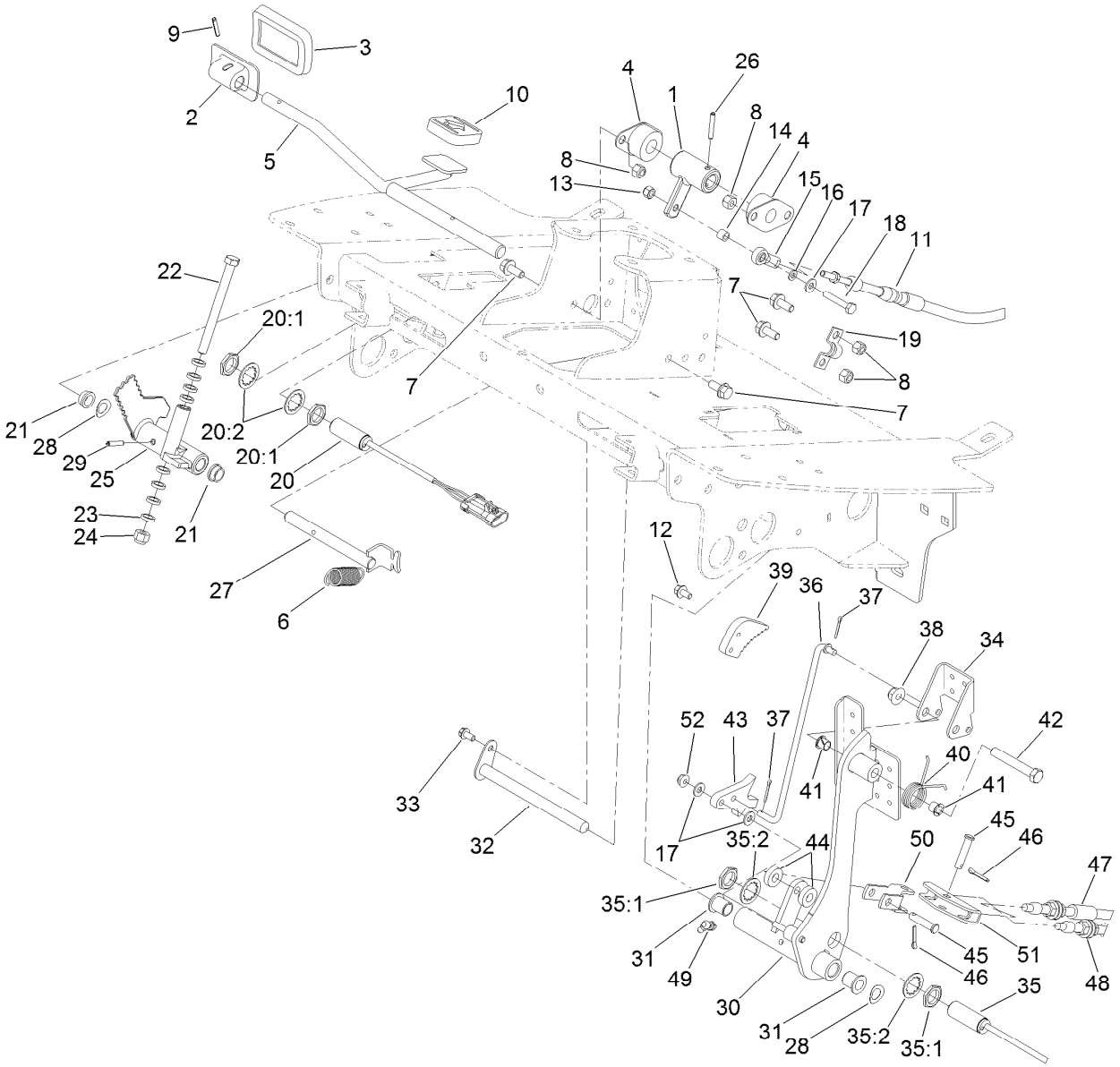

Control Pedal Assembly (continued)

Ref.	Part Number	Qty.	Description
39	99-7214	1	Pawl-Brake
40	99-7140	1	Spring-Torsion
41	52-2891	2	Bushing-Flanged, Nylon
42	323-12	1	Screw-HH
43	117-0238	1	Detent
44	5-0652	2	Spacer
45	283-14	2	Pin-Clevis

Ref.	Part Number	Qty.	Description
46	3272-10	2	Pin-Cotter
47	117-0106	1	Cable-Brake, RH
48	117-0107	1	Cable-Brake, LH
49	302-60	1	Fitting-Grease
50	115-8060	1	Clevis-Double
51	115-8059	1	Yoke-Cable
52	104-7201	1	Nut-HF, NI

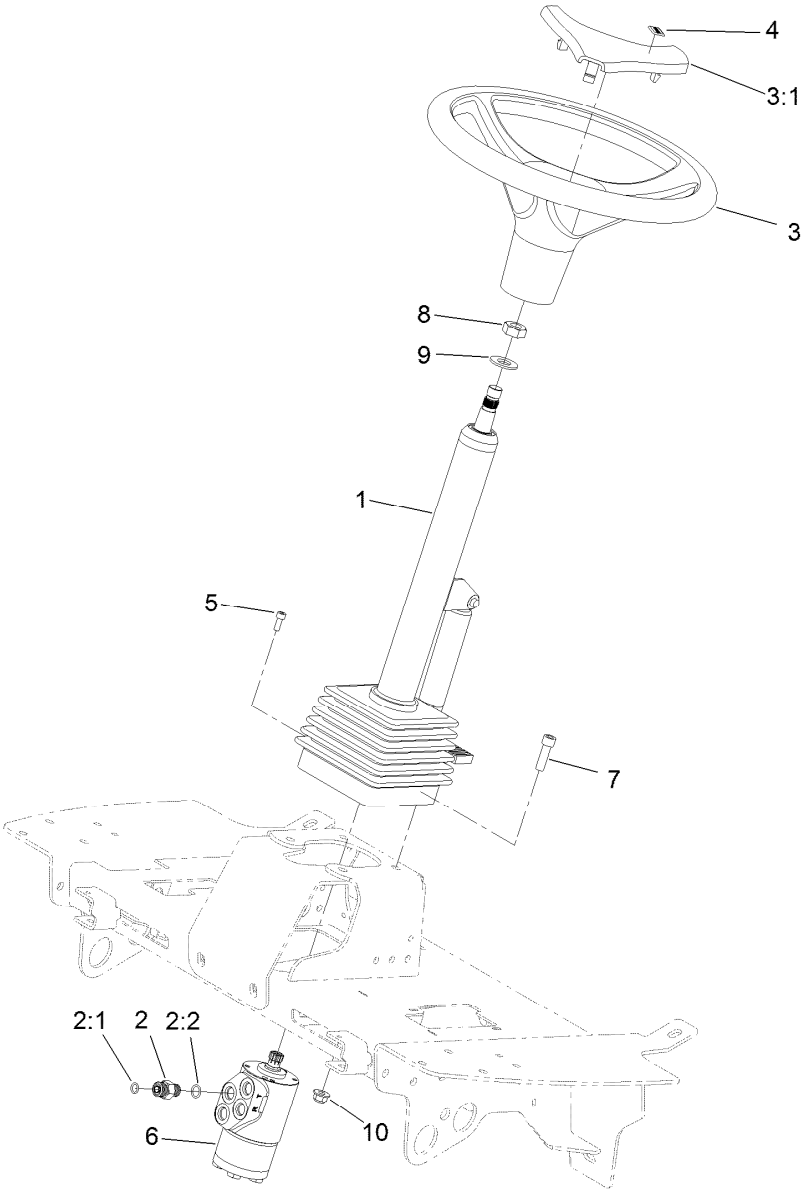

Steering Assembly

Ref.	*Part Number*	*Qty.*	*Description*
1	106-3622	1	Steering Tilt Column ASM
2	340-2	4	Fitting-Straight
2:1	237-22	1	O-Ring
2:2	237-42	1	O-Ring
3	98-1471	1	Wheel-Steering
3:1	98-1468	1	Cover-Wheel, Steering
4	98-1459	1	Decal
5	105-2409	4	Screw-HSH
6	106-3621	1	Steering Valve ASM
7	3274-1	4	Screw-HSH
8	3296-33	1	Nut-Lock, NI
9	3256-27	1	Washer-Flat
10	104-8301	4	Nut-HF, NI

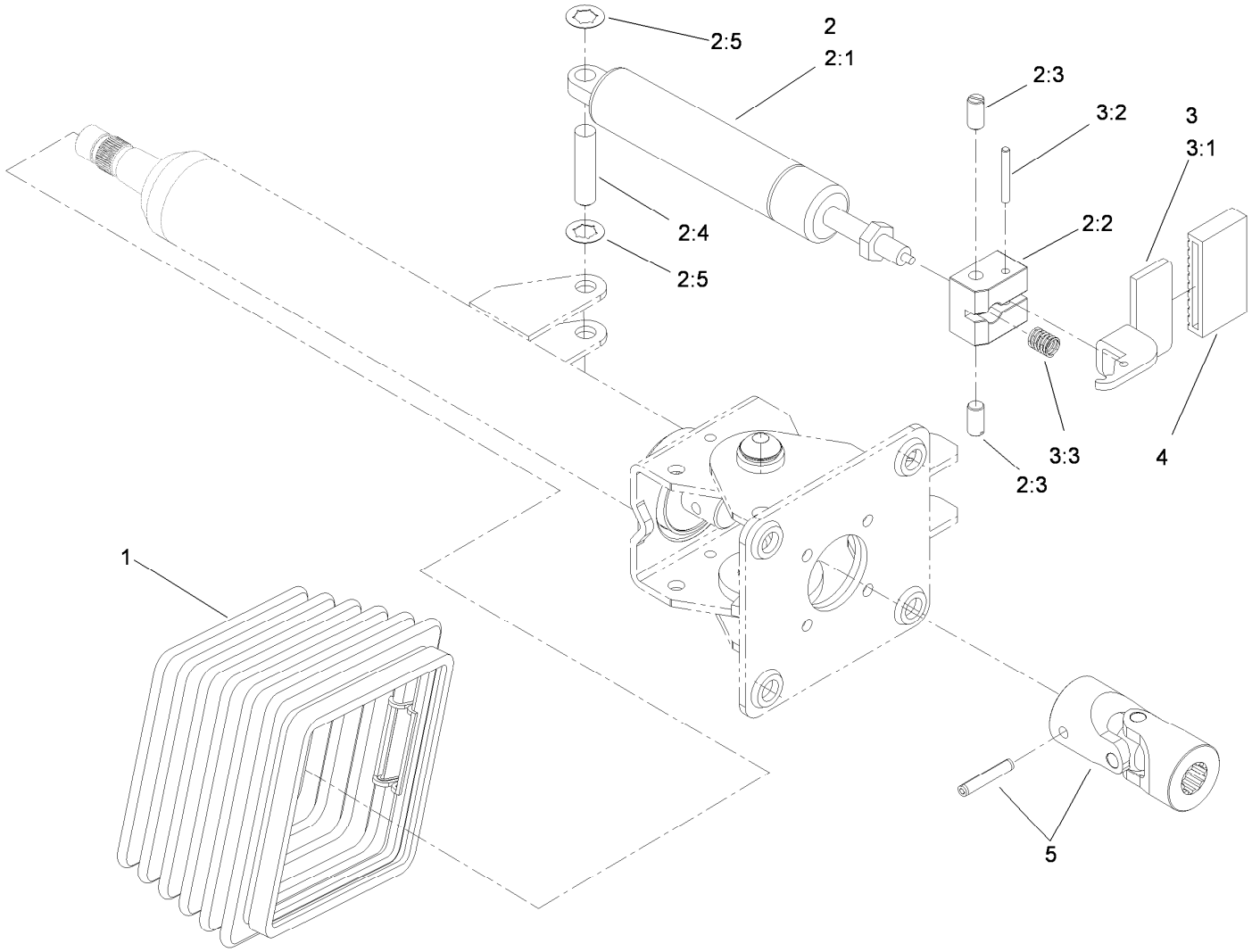

Steering Tilt Column Assembly No. 106-3622

Ref.	*Part Number*	*Qty.*	*Description*
1	110-6462	1	Bellows-Rubber
2	110-6463	1	Cylinder Service Kit
2:1		1	Cylinder-Gas ●
2:2		1	Block-Pedal ●
2:3		2	Bolt ●
2:4		1	Pin ●
2:5		2	Washer-Lock ●
3	110-6464	1	Pedal Service Kit
3:1		1	Pedal ●
3:2		1	Pin ●
3:3		1	Spring ●
4	110-6465	1	Cover-Pedal
5	120-6256	1	Universal Joint Kit

● Not serviced separately

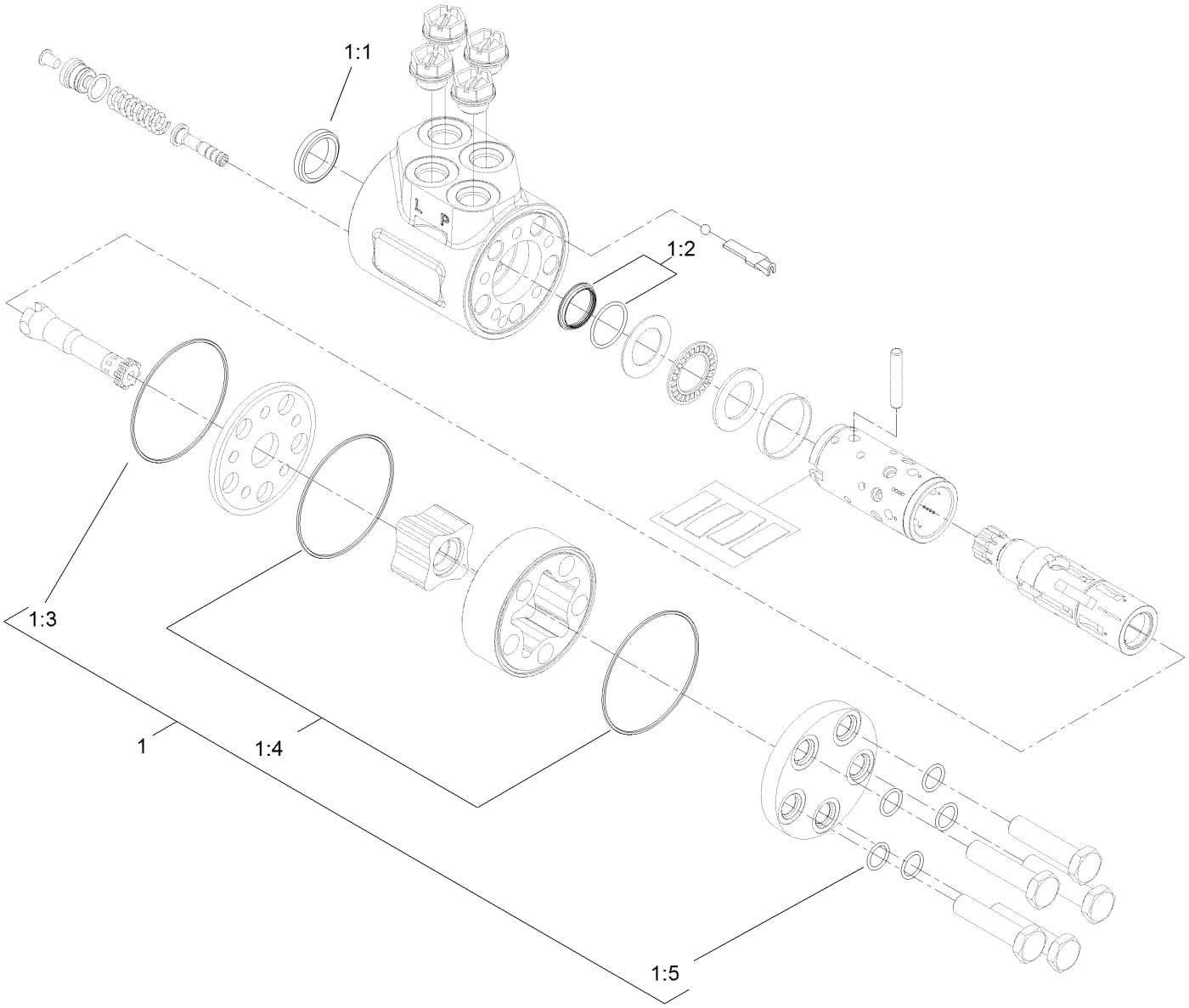

Steering Valve Assembly No. 106-3621

Ref.	*Part Number*	*Qty.*	*Description*
1	106-6716	1	Seal Kit
1:1		1	Ring-Seal, Dust ●
1:2		1	Seal-Shaft ●
1:3		1	O-Ring ●
1:4		2	O-Ring ●
1:5		5	O-Ring ●

● Not serviced separately

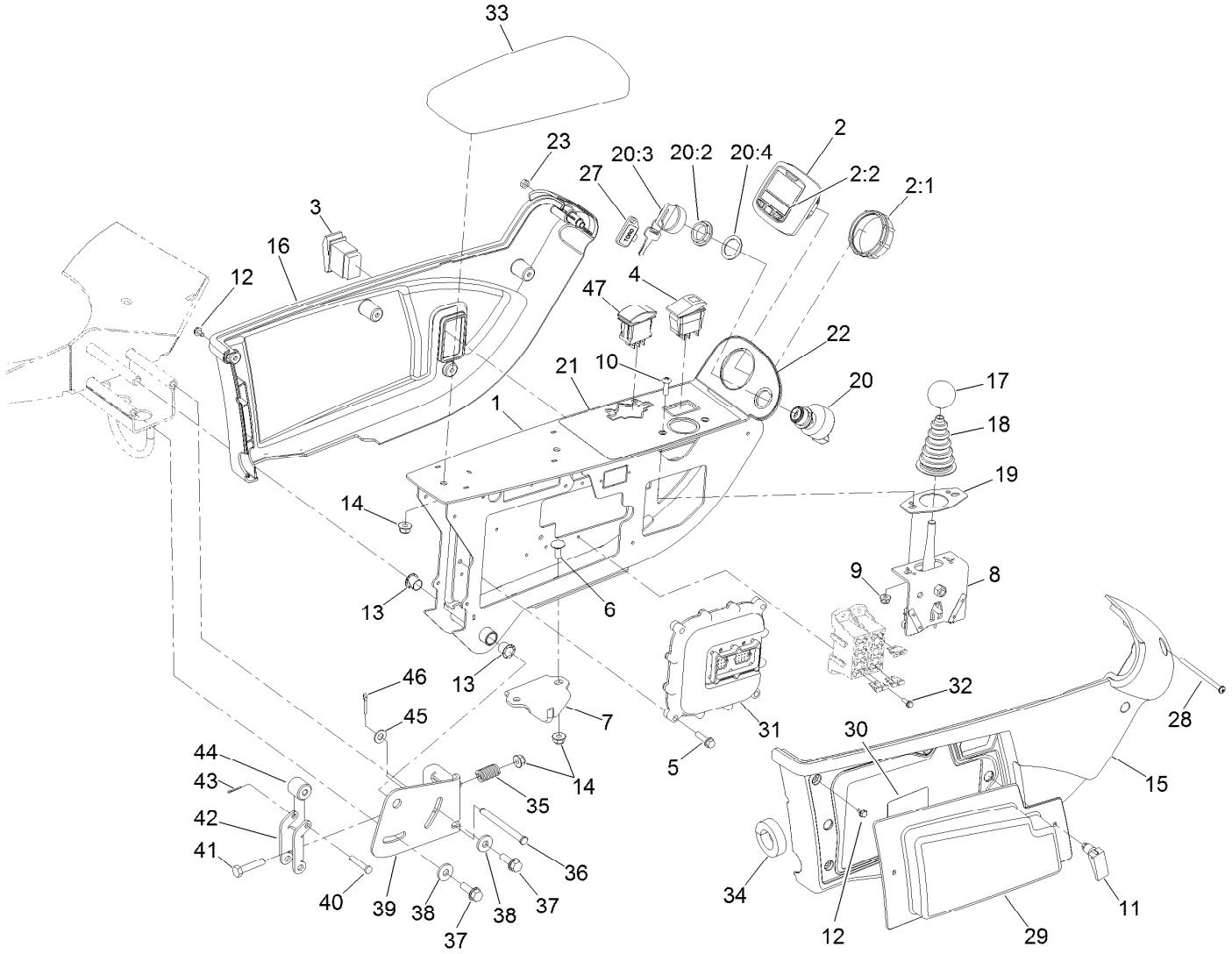

Control Arm Assembly

Ref.	Part Number	Qty.	Description
1	120-3801-03	1	Frame-Arm, Control
2	120-6310	1	LCD Display ASM
2:1	120-4630	1	Nut-Display
2:2	120-6311	1	Decal-Display
3	95-8999	1	Switch
4	105-4232	1	Switch
5	32144-86	4	Screw-HWHTF
6	3230-23	2	Bolt-CARR
7	125-1938	1	Latch
8	120-5280	1	Bracket-Joystick
9	104-7201	2	Nut-HF, NI
10	3258-166	2	Screw-PRH
11	74-5950	2	Latch-Swell
12	104-2065	10	Screw-HWH
13	256-257	2	Bushing-Nyliner
14	104-8300	5	Nut-HF, NI
15	108-7605	1	Cover-RH
16	108-7604	1	Cover-LH
17	233-42	1	Knob
18	93-5961	1	Boot-Lever
19	112-9181	1	Plate-Boot

Ref.	Part Number	Qty.	Description
20	106-5269	1	Ignition Switch ASM
20:2	108-8660	1	Nut-Mounting
20:3	106-5270	1	Ignition Key Set
20:4	108-8659	1	Washer-Backup
21	125-8754	1	Decal-Panel, Control
22	120-4158	1	Decal-Console, Upper
23	3296-2	1	Nut-Lock, NI
27	99-8970	1	Key-Latch, Hood
28	3250-22	1	Screw-PPH
29	114-0446	1	Panel-Access
30	145-5261	1	Decal-Fuse
31	114-3321	1	Controller-Tec
32	32144-87	4	Screw-HWHTF
33	108-7602	1	Rest-Arm
34	110-8912	1	Seal-Foam
35	110-5331	1	Spring-Compression
36	283-88	1	Pin-Clevis
37	32144-41	2	Screw-Taptite
38	4-2390	2	Washer-Flat
39	110-5313-03	1	Bracket-Retainer
40	283-73	1	Pin-Clevis

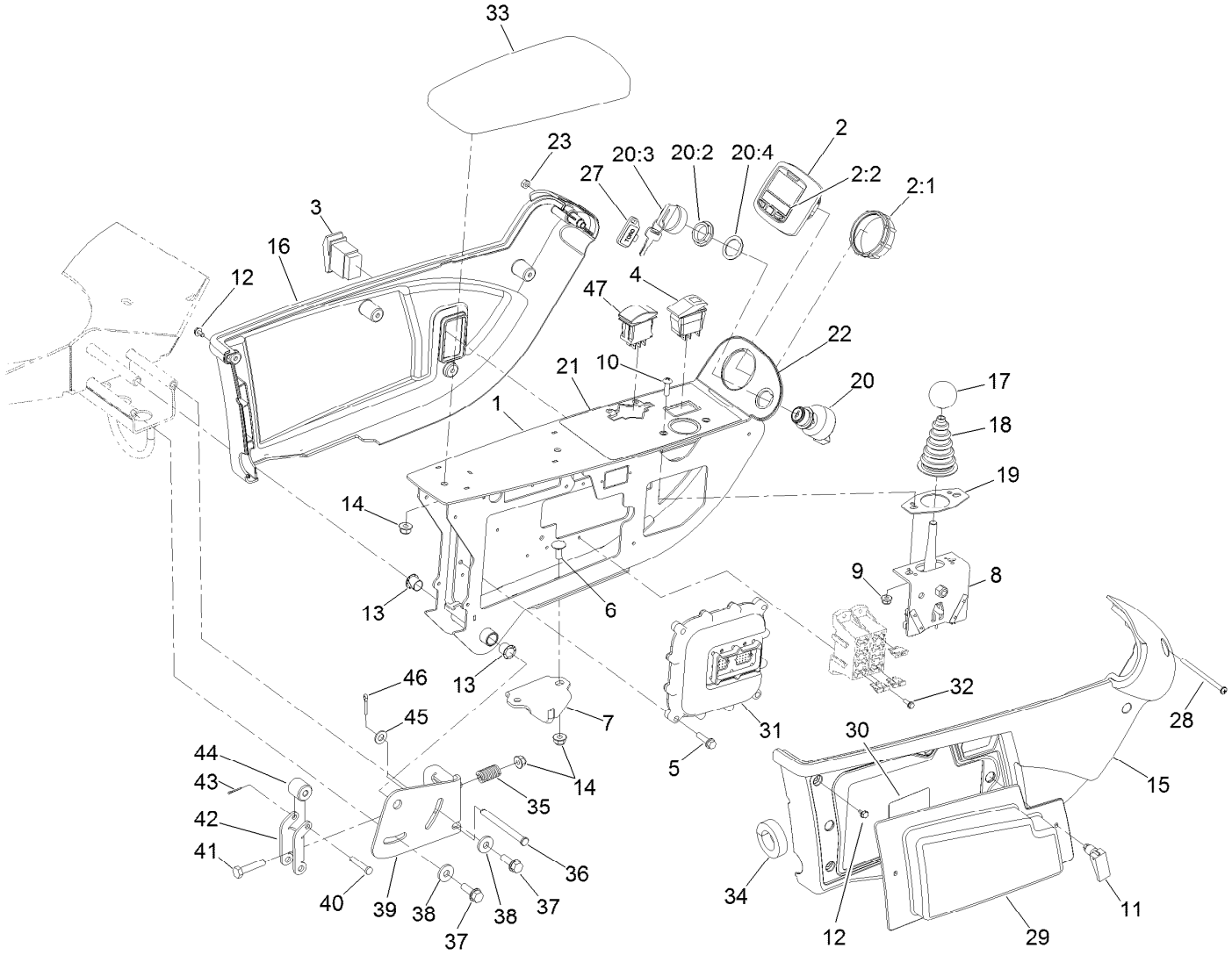

Control Arm Assembly (continued)

Ref.	Part Number	Qty.	Description
41	322-7	1	Screw-HH
42	110-5314	1	Latch
43	3272-1	1	Pin-Cotter
44	110-8856	1	Spacer

Ref.	Part Number	Qty.	Description
45	3256-23	1	Washer-Plain
46	3272-11	1	Pin-Cotter
47	100-1535	1	Switch-Rocker, (On)-Off-(On)

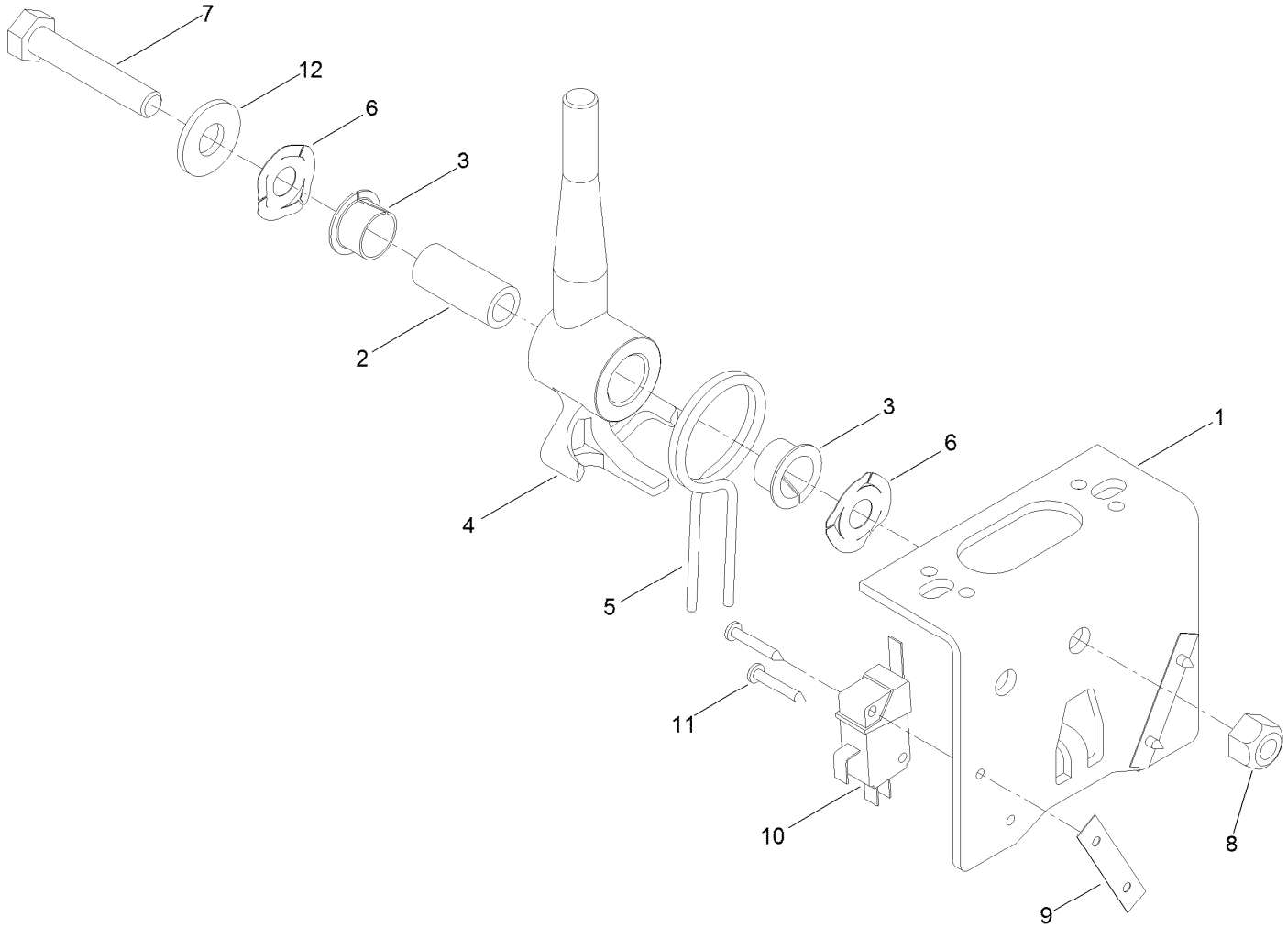

Joystick Bracket Assembly No. 120-5280

Ref.	*Part Number*	*Qty.*	*Description*
1	115-5357-03	1	Bracket-Joystick
2	106-4192	1	Spacer
3	93-5547	2	Bushing-Nylon
4	119-3540	1	Hub-Pivot, Joystick
5	105-8289	1	Spring-Torsion
6	106-4193	2	Washer-Finger, Spring
7	322-9	1	Screw-HH
8	3296-29	1	Nut-Lock, NI
9	3290-354	2	Nut-Speed
10	108-6496	2	Switch (W/Boot)
11	95-3003	4	Screw-PPHTF
12	3256-3	1	Washer-Flat

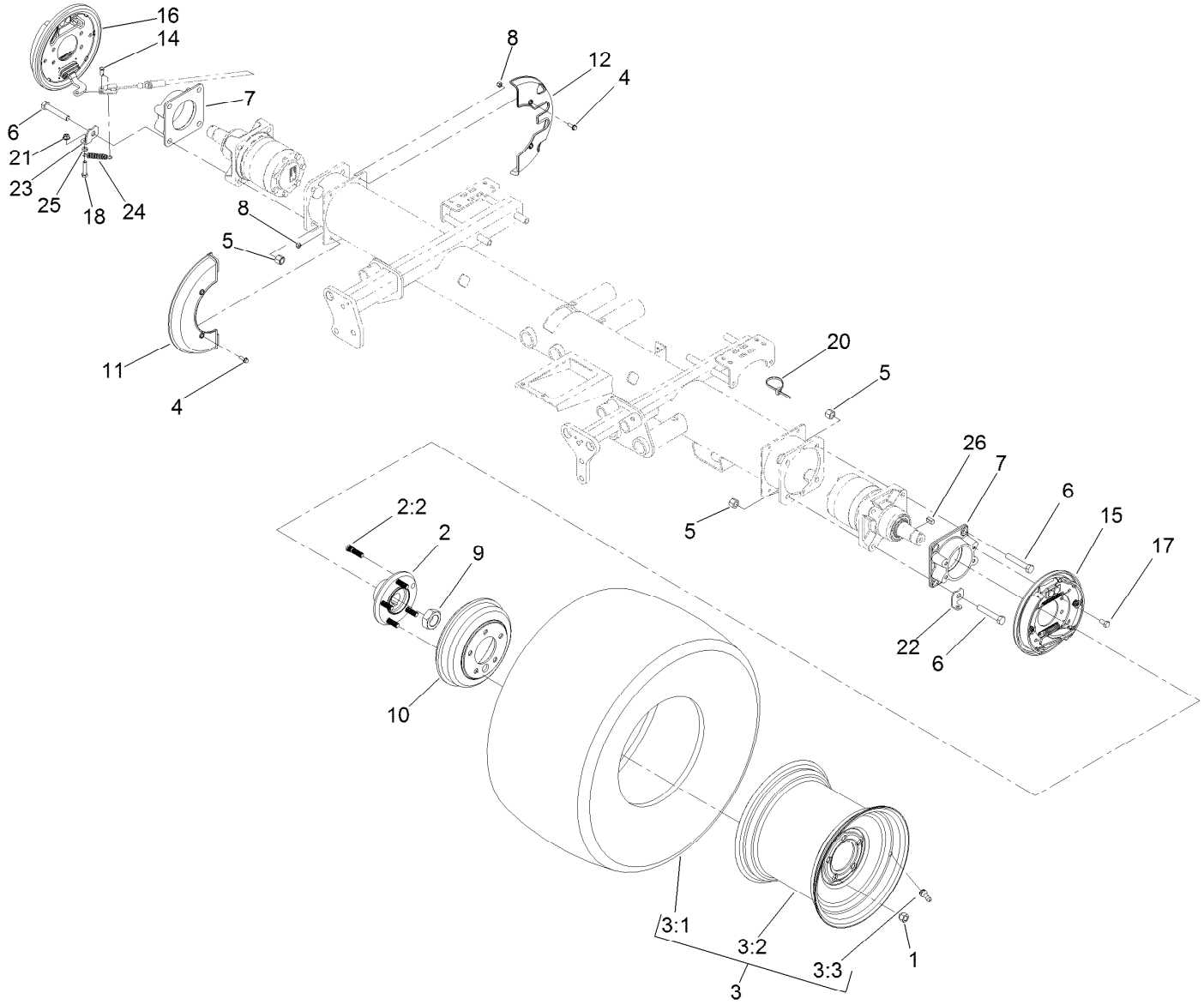

Front Axle Assembly

Ref.	Part Number	Qty.	Description
1	242-50	10	Nut-Lug
2	121-5631	2	Hub ASM
2:2	114-3918	5	Stud-Wheel
3	139-6005	2	Tire ASM
3:1	133-2724	1	Tire
3:2	139-6006	1	Wheel
3:3	232-27	1	Stem-Valve
4	115-5103	8	Screw-HHF
5	3296-23	8	Nut-Lock, NI
6	325-12	8	Screw-HH
7	120-6253-03	2	Adapter-Brake
8	3296-42	8	Nut-Lock, NI
9	117-3290	2	Nut-Hex
10	114-8864	2	Drum-Brake

Ref.	Part Number	Qty.	Description
11	127-2741	2	Shield-Wheel, Front
12	127-2742	2	Shield-Wheel, Rear
14	283-62	2	Pin-Clevis
15	139-5952	1	LH Brake ASM
16	139-5951	1	RH Brake ASM
17	323-4	8	Screw-HH
18	322-7	2	Screw-HH
20	3290-378	2	Tie-Cable
21	104-8300	2	Nut-HF, NI
22	120-6267	1	Clip-Spring, LH
23	120-6266	1	Clip-Spring, RH
24	87-4020	2	Spring-Extension
25	3218-2	2	Nut-Hex Jam
26	117-5198	2	Key-Square

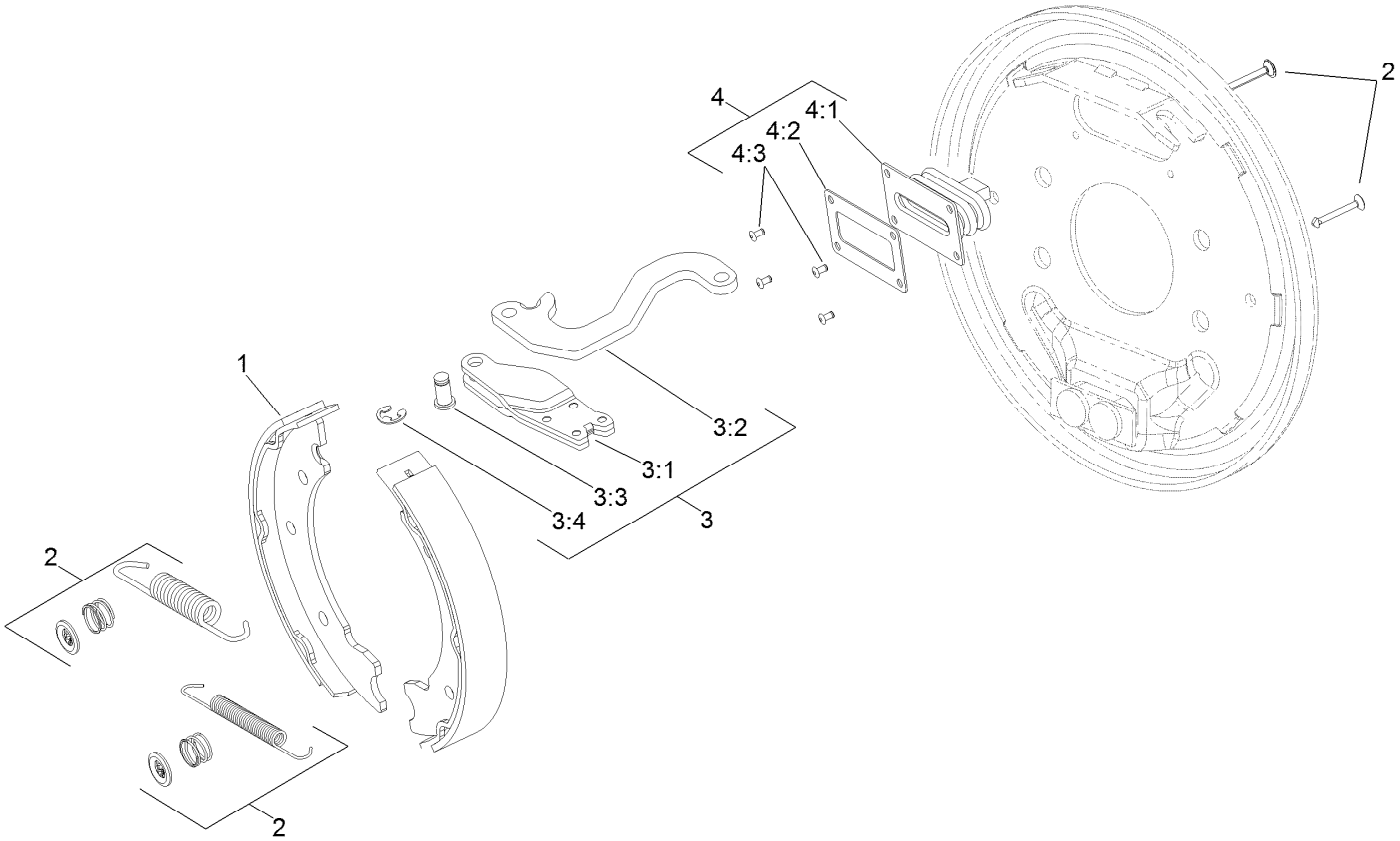

LH Brake Assembly No. 139-5952

Ref.	*Part Number*	*Qty.*	*Description*
1	139-5950	1	Brake Shoe Kit
2	108-6983	1	Brake Hardware Kit
3	110-8910	1	LH Actuator Kit
3:1		1	Housing ●
3:2		1	Lever-LH ●
3:3		1	Pin-Pivot ●
3:4		1	E-Ring ●
4	110-8885	1	Dust Boot Kit
4:1		1	Boot ●
4:2		1	Plate-Back Up ●
4:3		2	Rivet ●

● Not serviced separately

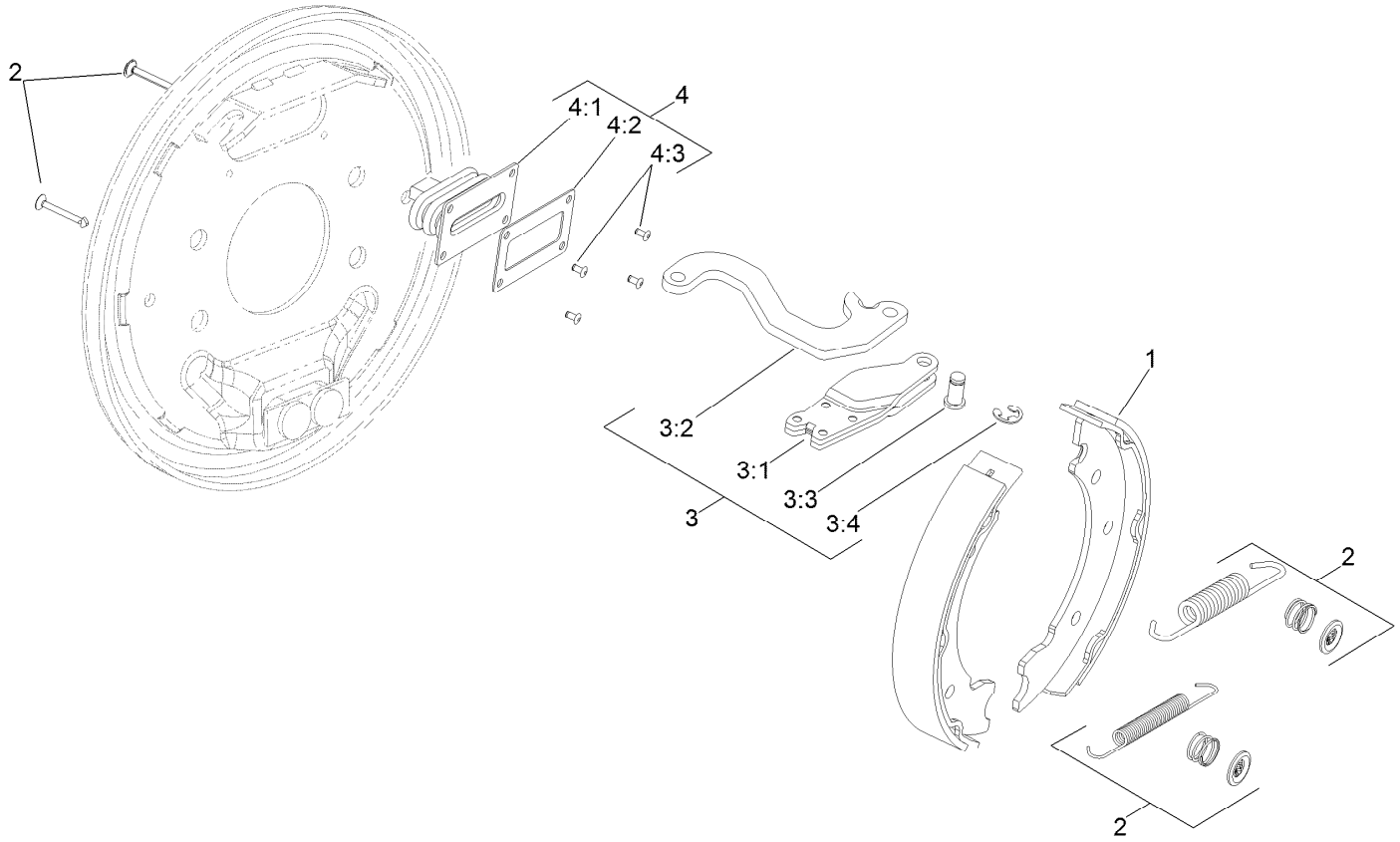

RH Brake Assembly No. 139-5951

Ref.	*Part Number*	*Qty.*	*Description*
1	139-5950	1	Brake Shoe Kit
2	108-6983	1	Brake Hardware Kit
3	110-8884	1	RH Actuator Kit
3:1		1	Housing ●
3:2		1	Lever-RH ●
3:3		1	Pin-Pivot ●
3:4		1	E-Ring ●
4	110-8885	1	Dust Boot Kit
4:1		1	Boot ●
4:2		1	Plate-Back Up ●
4:3		2	Rivet ●

● Not serviced separately

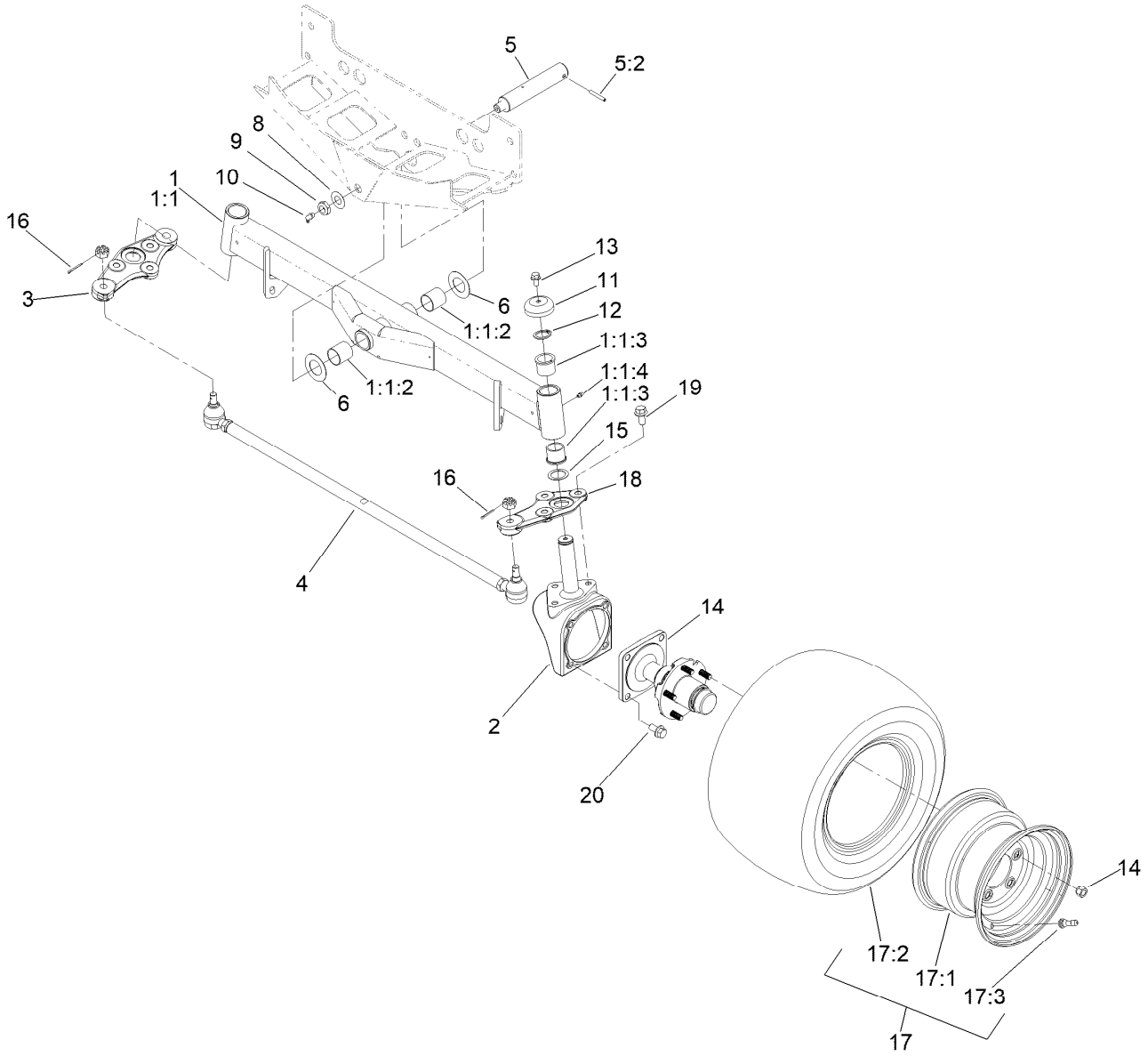

Rear Axle Assembly

Ref.	Part Number	Qty.	Description
1	107-4546-03	1	Axle ASM
1:1		1	Axle ●
1:1:2	99-6964	2	Bushing-Axle
1:1:3	104-0015	4	Bushing-Flange
1:1:4	302-5	2	Fitting-Grease
2	107-4517-03	2	Housing-Motor
3	140-3142	1	Link-Drag, RH
4	139-6029	1	Tie Rod ASM
5	140-6101	1	Pin ASM-Axle Pivot
5:2	32121-32	1	Pin-Roll
6	99-8432	2	Washer-Thrust
8	71-4540	1	Washer-Thrust
9	3296-15	1	Nut-Lock, NI
10	302-33	1	Fitting-Grease

Ref.	Part Number	Qty.	Description
11	69-8890	2	Cap-Spindle
12	32151-77	2	Ring-Retaining, External
13	3234-1	2	Screw-HHF
14	117-8961	2	Hub And Spindle ASM
15	76-2980	2	Washer-Thrust
16	3272-12	2	Pin-Cotter
17	117-0281	2	Rim And Tire ASM
17:1	117-0280	1	Rim
17:2	117-5125	1	Tire
17:3	232-27	1	Stem-Valve
18	140-3144	1	Link-Drag, LH
19	3234-38	6	Screw-HHF
20	3234-6	8	Screw-HHF

● Not serviced separately

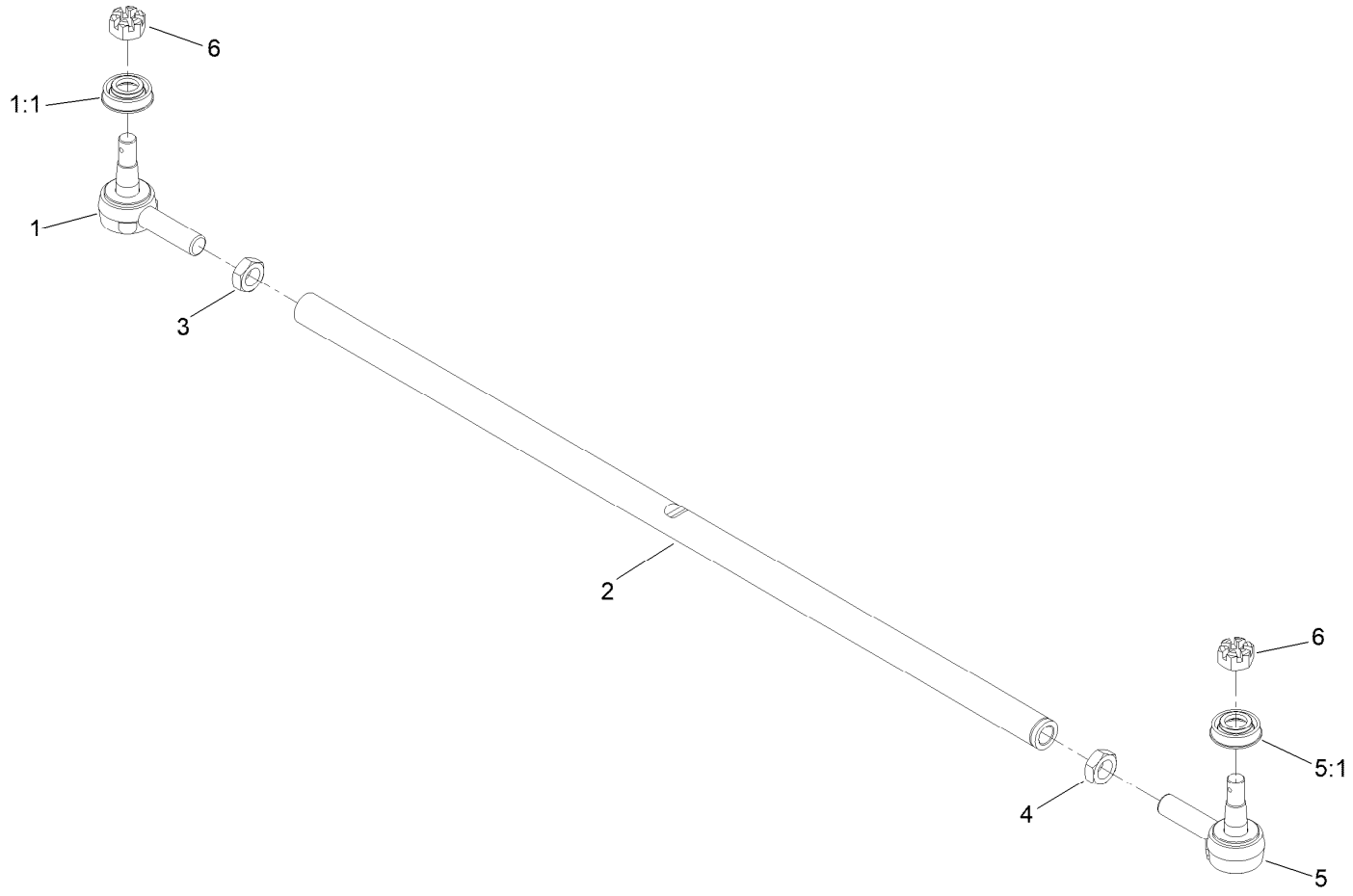

Tie Rod Assembly No. 139-6029

Ref.	*Part Number*	*Qty.*	*Description*
1	144-3901	1	Tie Rod End
1:1	144-3903	1	Seal
2	139-6030	1	Rod-Tie
3	84-5300	1	Nut-Jam
4	110-5337	1	Nut-Jam
5	144-3902	1	Tie Rod End
5:1	144-3903	1	Seal
6	140-6135	2	Nut-Hex, Slotted

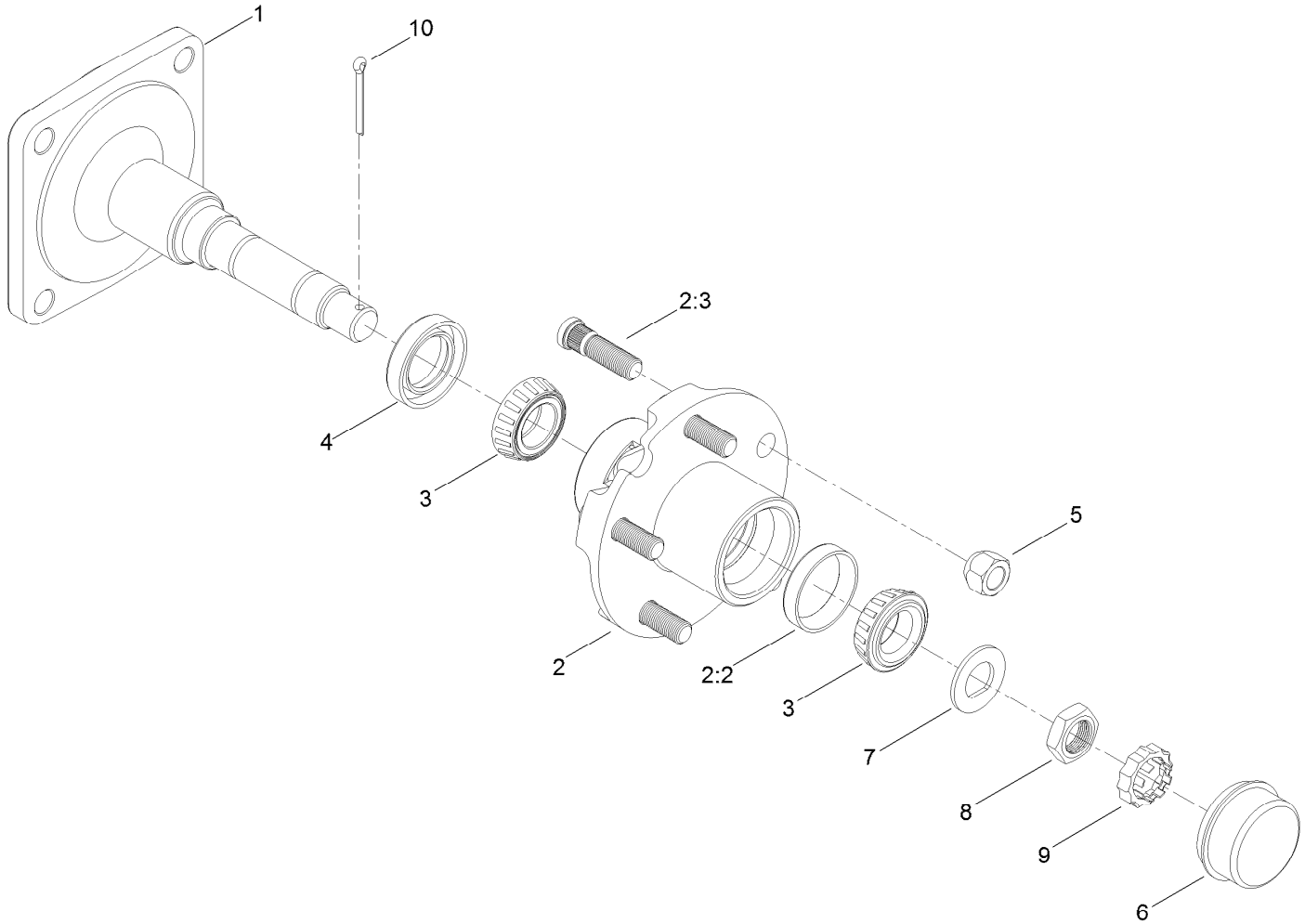

Hub and Spindle Assembly No. 117-8961

Ref.	*Part Number*	*Qty.*	*Description*
1	117-8958	1	Spindle
2	117-8963	1	Hub ASM
2:2	254-72	2	Bearing-Cup, Tapered
2:3	114-3918	5	Stud-Wheel
3	254-94	2	Bearing-Cone, Tapered
4	112-1690	1	Seal-Oil
5	242-50	5	Nut-Lug
6	241-119	1	Cap-Dust
7	117-8259	1	Washer-Spindle
8	117-8260	1	Nut
9	93-0307	1	Nut-Lock, Retainer
10	3272-18	1	Pin-Cotter

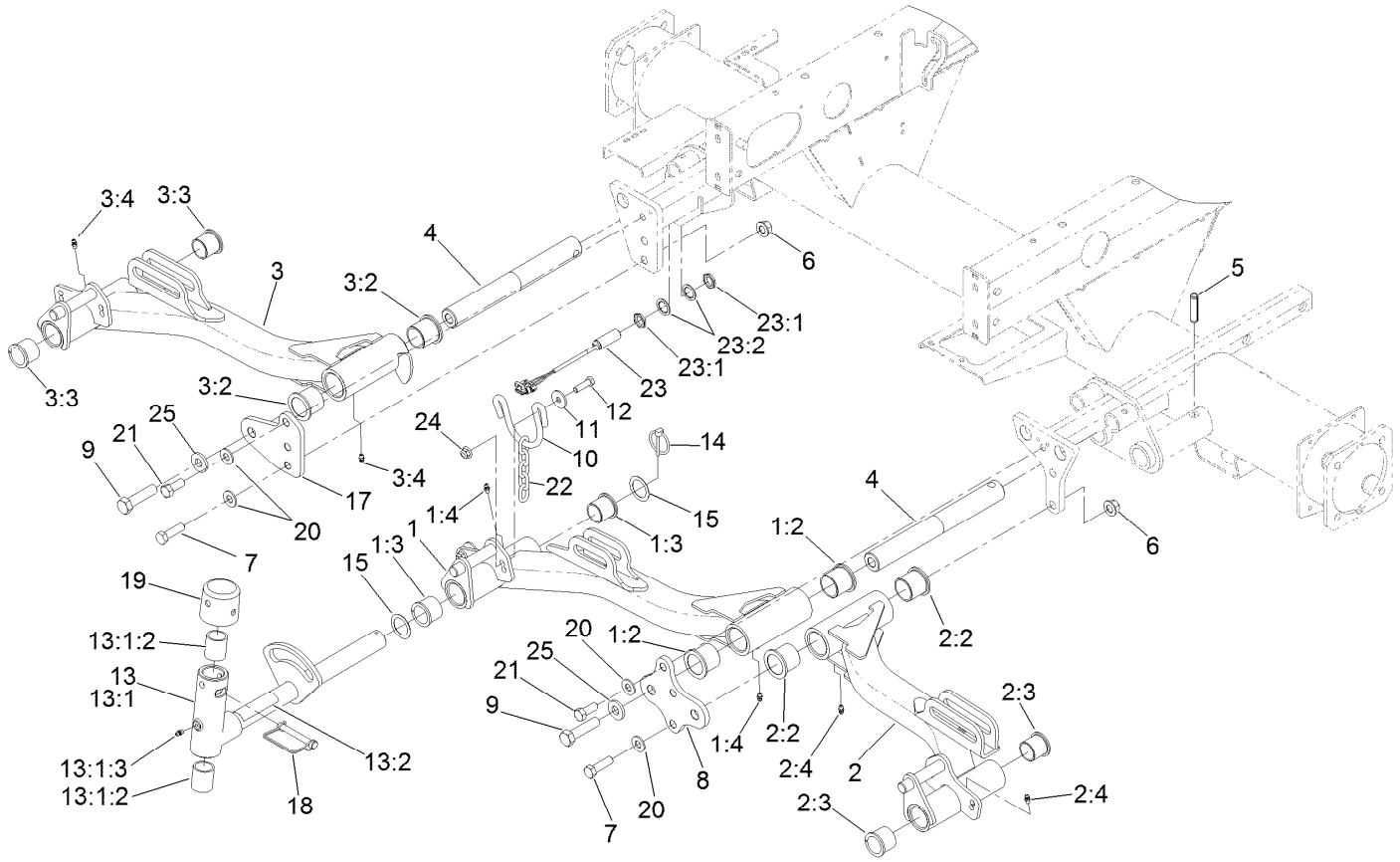

No. 1, 4 and 5 Lift Arm Assembly

Ref.	Part Number	Qty.	Description
1	133-2911	1	Lift Arm ASM #1
1:2	69-6470	2	Bushing-Caster
1:3	104-0015	2	Bushing-Flange
1:4	302-5	2	Fitting-Grease
2	133-2914	1	Lift Arm ASM #4
2:2	69-6470	2	Bushing-Caster
2:3	104-0015	2	Bushing-Flange
2:4	302-5	2	Fitting-Grease
3	133-2915	1	Lift Arm ASM #5
3:2	69-6470	2	Bushing-Caster
3:3	104-0015	2	Bushing-Flange
3:4	302-5	2	Fitting-Grease
4	117-0208	3	Shaft-Pivot, Liftarm
5	32121-122	3	Pin-Roll
6	99-5107	4	Nut-Lock
7	325-7	4	Screw-HH
8	117-5154-01	1	Plate-Bridge 1 And 4
9	327-7	3	Screw-HH

Ref.	Part Number	Qty.	Description
10	110-0922	3	Hoop-Chain
11	63-8410	6	Washer
12	323-7	6	Screw-HH
13	138-1248	3	Pivot Yoke ASM
13:1		1	Yoke-Pivot ●
13:1:2	121-3187	2	Bushing
13:1:3	302-5	1	Fitting-Grease
13:2	110-9642	1	Decal-Warning
14	92-1298	3	Pin-Lynch
15	76-2980	6	Washer-Thrust
17	117-5153-01	1	Plate-Bridge 5
18	107-7400	3	Pin-Lynch
19	107-4027	3	Cap
20	87-7270	6	Washer-Thrust
21	325-5	2	Screw-HH
22	84-2451	3	Chain-Straight, 5 Link
23	115-5300	1	Proximity Switch ASM
23:1	117-3207	2	Nut-Hex

● Not serviced separately

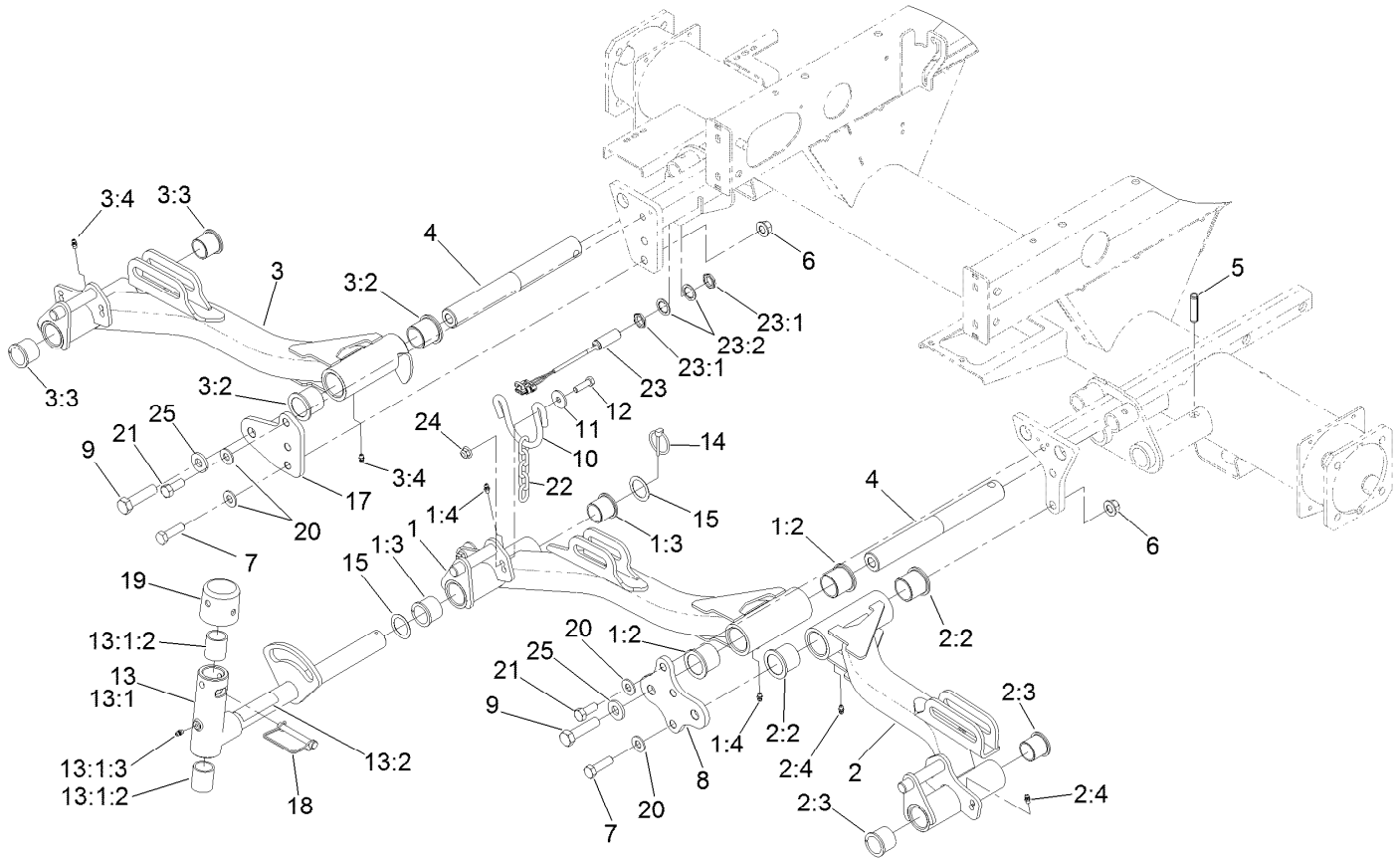

No. 1, 4 and 5 Lift Arm Assembly (continued)

Ref.	Part Number	Qty.	Description
23:2	117-3208	2	Washer-Lock, Internal Tooth

Ref.	Part Number	Qty.	Description
24	104-8301	6	Nut-HF, NI
25	99-7667	3	Washer-Flat

● Not serviced separately

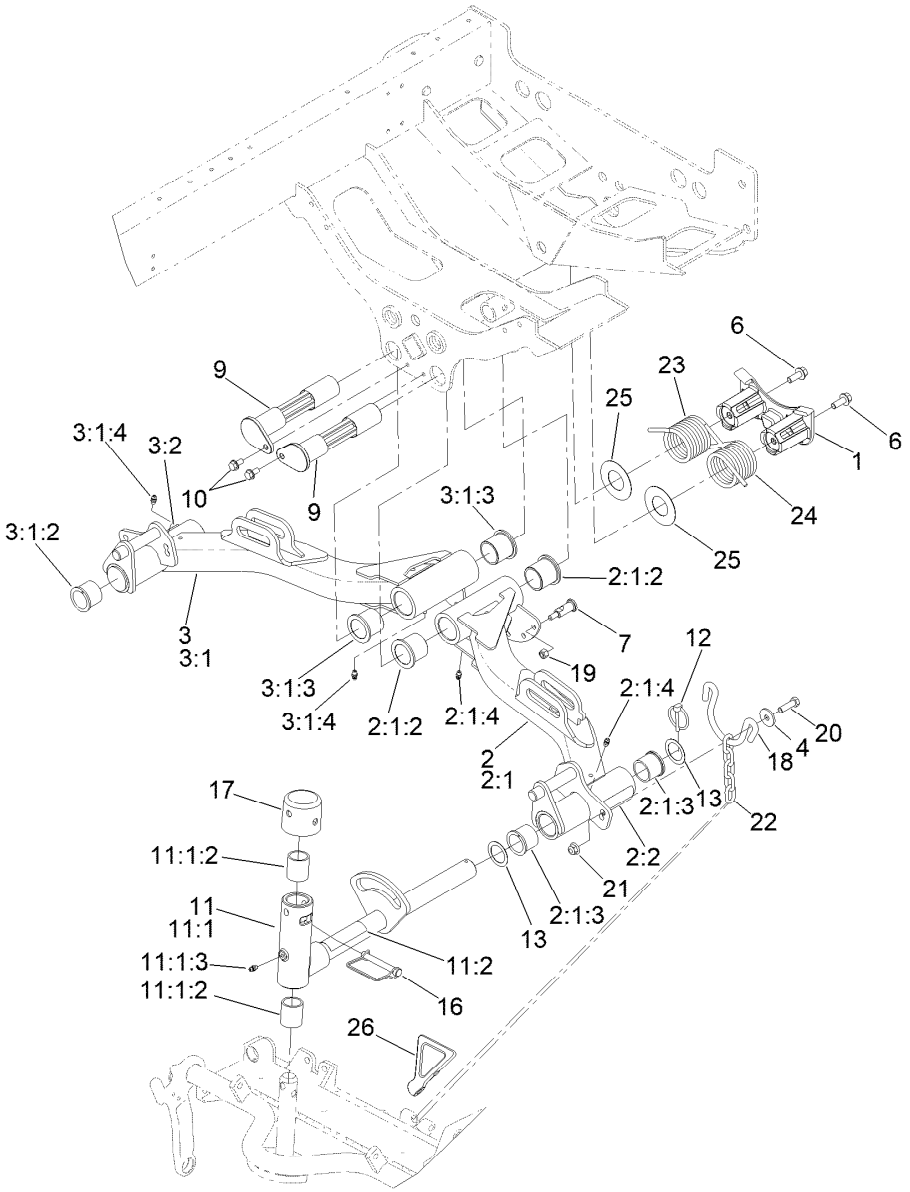

No. 2 and 3 Lift Arm Assembly

Ref.	Part Number	Qty.	Description
1	125-2018	1	Housing
2	136-8002	1	Lift Arm #2
2:1		1	Lift Arm ASM #2 ●
2:1:2	69-6470	2	Bushing-Caster
2:1:3	104-0015	2	Bushing-Flange
2:1:4	302-5	2	Fitting-Grease
2:2	93-6696	1	Decal-Warning
3	136-8003	1	Lift Arm #3
3:1		1	Lift Arm ASM #3 ●
3:1:2	69-6470	2	Bushing-Caster
3:1:3	104-0015	2	Bushing-Flange
3:1:4	302-5	2	Fitting-Grease
3:2	93-6696	1	Decal-Warning
4	63-8410	4	Washer
6	3234-11	2	Screw-HHF
7	120-6283	6	Stud-Shouldered
9	125-2037	2	Shaft
10	32144-14	2	Screw-HWHTF

Ref.	Part Number	Qty.	Description
11	138-1248	2	Pivot Yoke ASM
11:1		1	Yoke-Pivot ●
11:1:2	121-3187	2	Bushing
11:1:3	302-5	1	Fitting-Grease
11:2	110-9642	1	Decal-Warning
12	92-1298	2	Pin-Lynch
13	76-2980	4	Washer-Thrust
16	107-7400	2	Pin-Lynch
17	107-4027	2	Cap
18	110-0922	2	Hoop-Chain
19	3296-29	6	Nut-Lock, NI
20	323-7	4	Screw-HH
21	104-8301	4	Nut-HF, NI
22	84-2451	2	Chain-Straight, 5 Link
23	99-5608-03	1	Spring-Torsion, RH
24	99-5609-03	1	Spring-Torsion, LH
25	110-5345	2	Washer
26	119-8010-03	1	Kickstand

● Not serviced separately

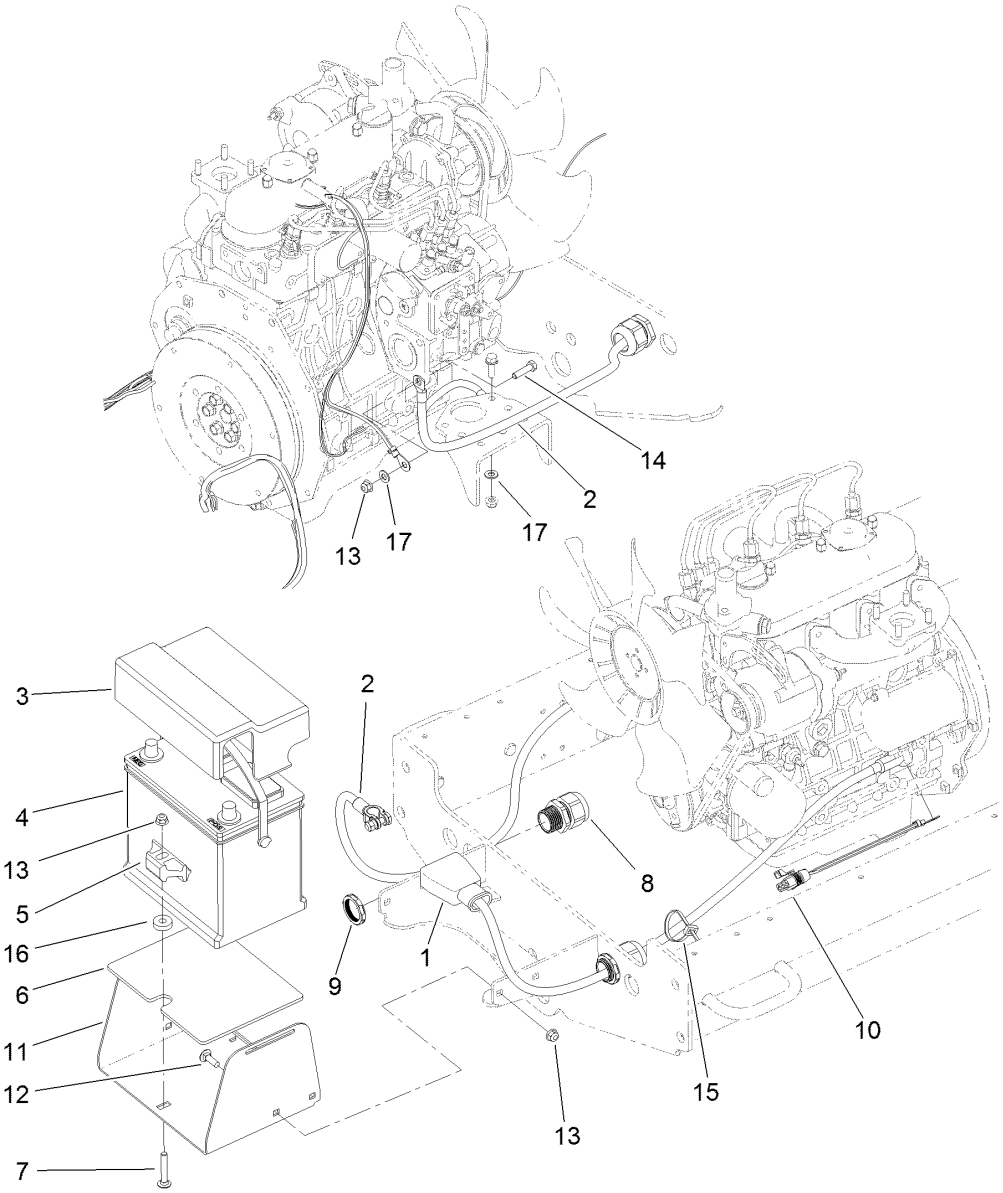

Battery Mounting Assembly

Ref.	Part Number	Qty.	Description
1	120-6398	1	Cable-Battery, Positive
2	120-6399	1	Cable-Battery, Negative
3	121-5615	1	Cover-Battery
4	104-9979	1	Battery
5	138-6335	1	Retainer-Battery
6	127-2781	1	Mat-Battery
7	3230-6	1	Bolt-CARR
8	121-8854	2	Grip-Cord
9	121-8855	2	Locknut-Grip, Cord

Ref.	Part Number	Qty.	Description
10	99-3441	1	Harness-Wire, Fusible Link
11	125-1583-03	1	Tray-Battery
12	3230-2	4	Bolt-CARR
13	104-8300	6	Nut-HF, NI
14	322-6	1	Screw-HH
15	3290-378	5	Tie-Cable
16	62-6660	1	Spacer
17	120-9683	2	Washer-Plain

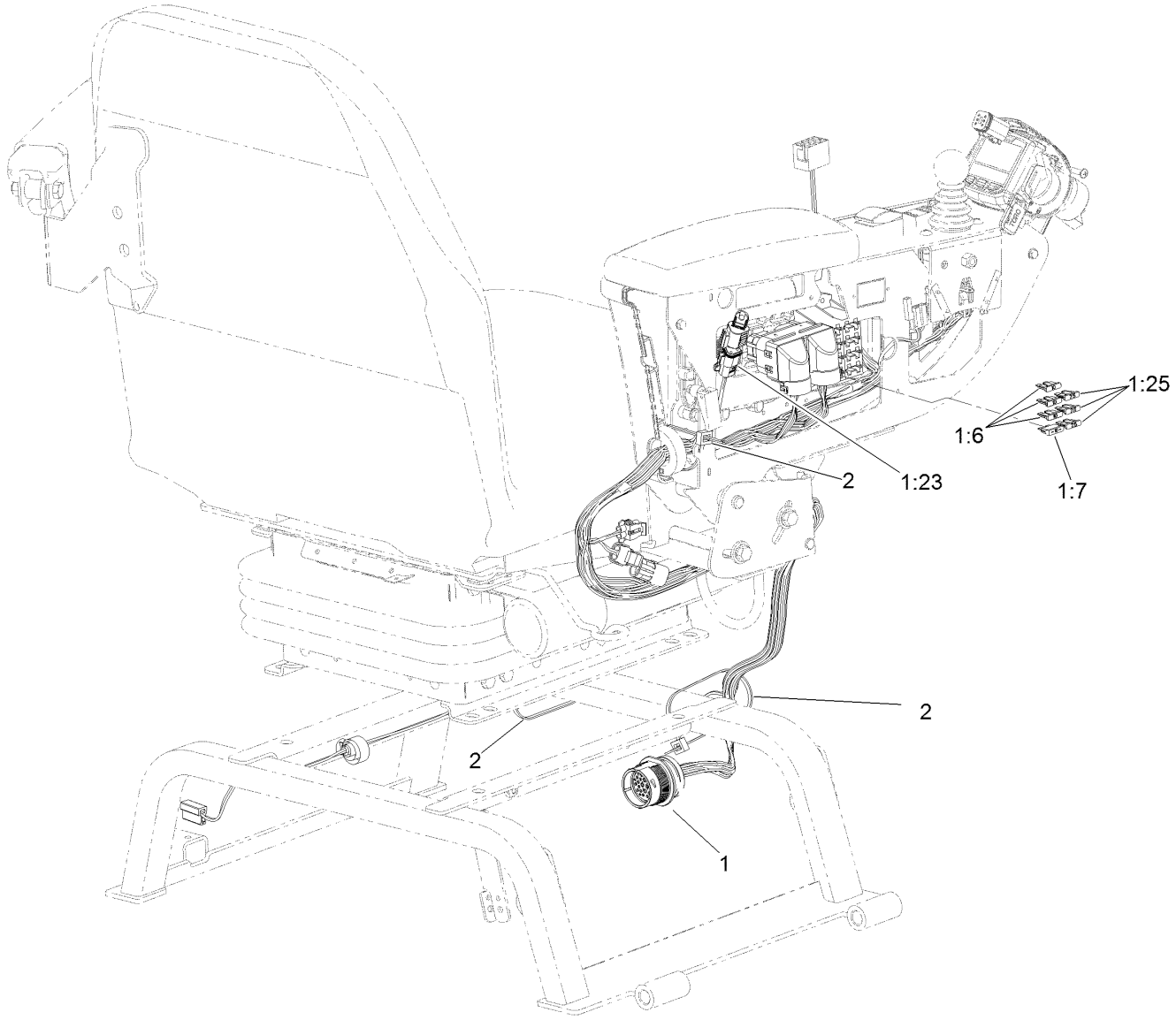

Control Console Electrical Assembly

Ref.	*Part Number*	*Qty.*	*Description*
1	121-6598	1	Harness-Wire, Seat
1:6	218-578	3	Fuse-Blade, 10 Amp
1:7	109355	1	Fuse-Blade, 15 Amp
1:23	32180-043	1	Resistor-120 Ohm
1:25	114241	3	Fuse-Blade, 7.5 Amp
2	3290-378	3	Tie-Cable

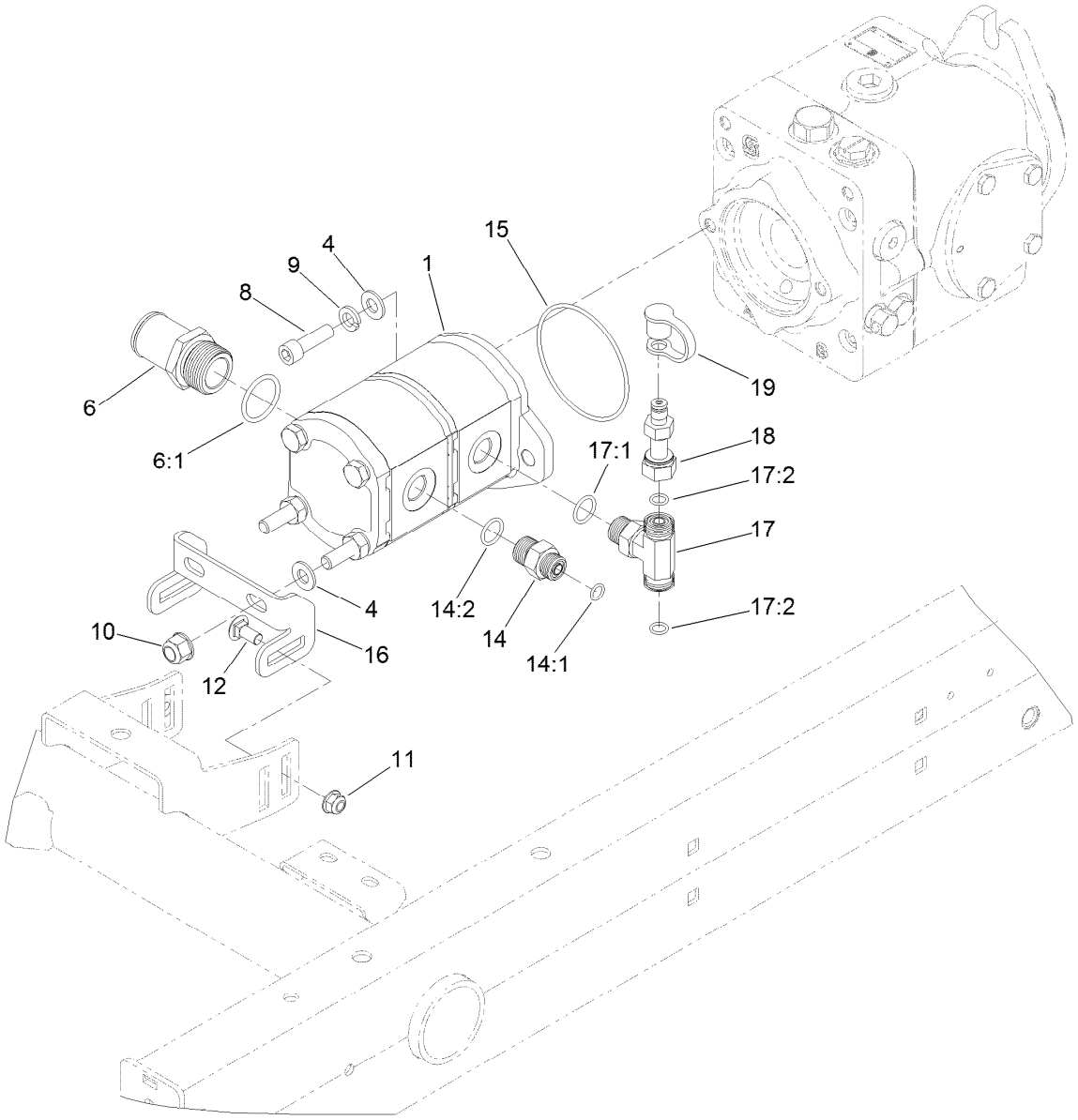

Gear Pump Assembly

Ref.	Part Number	Qty.	Description
1	125-1530	1	Tandem Gear Pump ASM
4	3256-24	4	Washer-Flat
6	125-1528	1	Fitting-STR
6:1	237-146	1	O-Ring
8	3274-1	2	Screw-HSH
9	3253-5	2	Washer-Lock
10	103-9511	2	Nut-Lock, NI
11	104-8300	2	Nut-HF, NI
12	3230-1	2	Bolt-CARR
14	340-3	1	Fitting-Straight

Ref.	Part Number	Qty.	Description
14:1	237-22	1	O-Ring
14:2	237-79	1	O-Ring
15	237-161	1	O-Ring
16	108-1801-0P	1	Bracket - Pump Support
17	92-4799	1	Fitting-Tee, HYD
17:1	237-79	1	O-Ring
17:2	237-22	2	O-Ring
18	86-5480	1	Nipple-Test
19	354-79	1	Cap-Dust

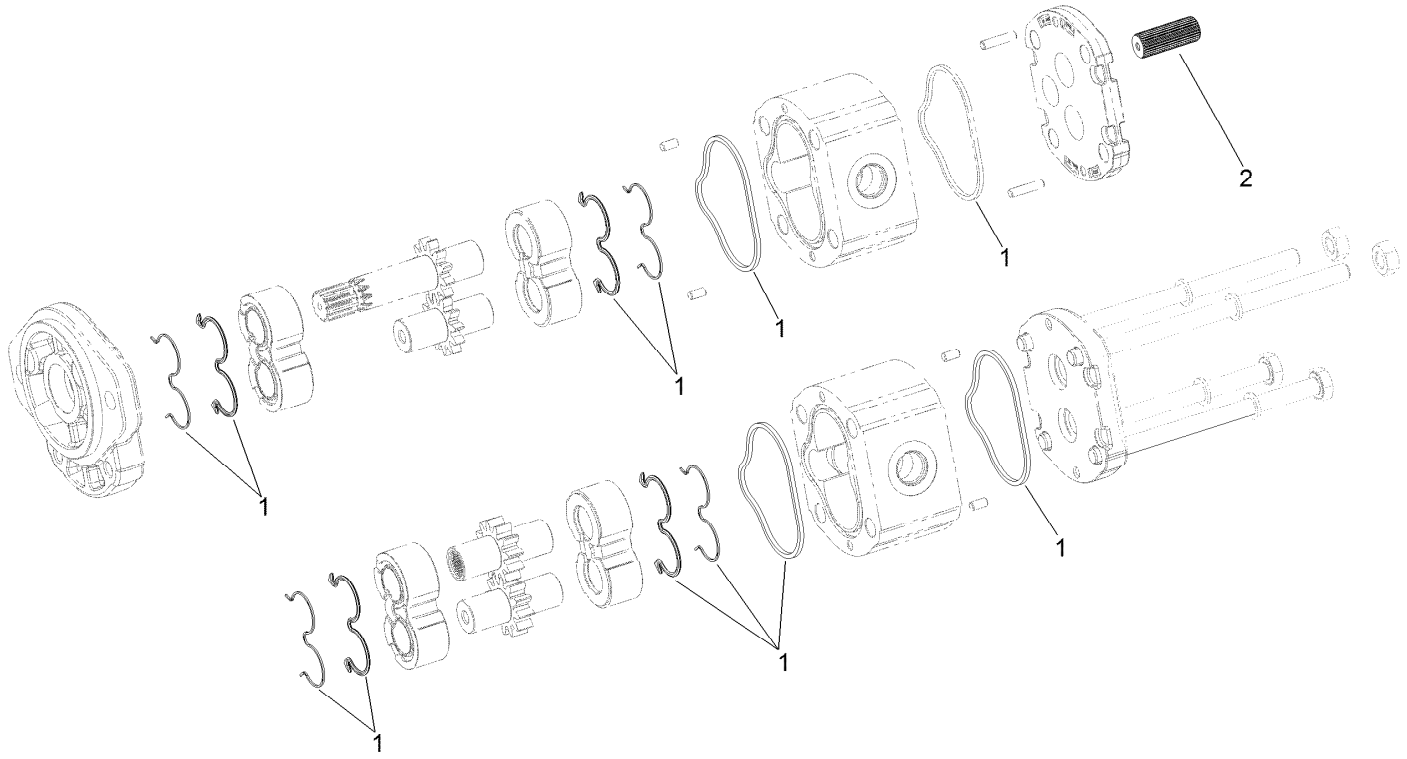

Tandem Gear Pump Assembly No. 125-1530

Ref.	*Part Number*	*Qty.*	*Description*
1	120-5155	1	Seal Kit
2	120-6284	1	Hub-Connecting

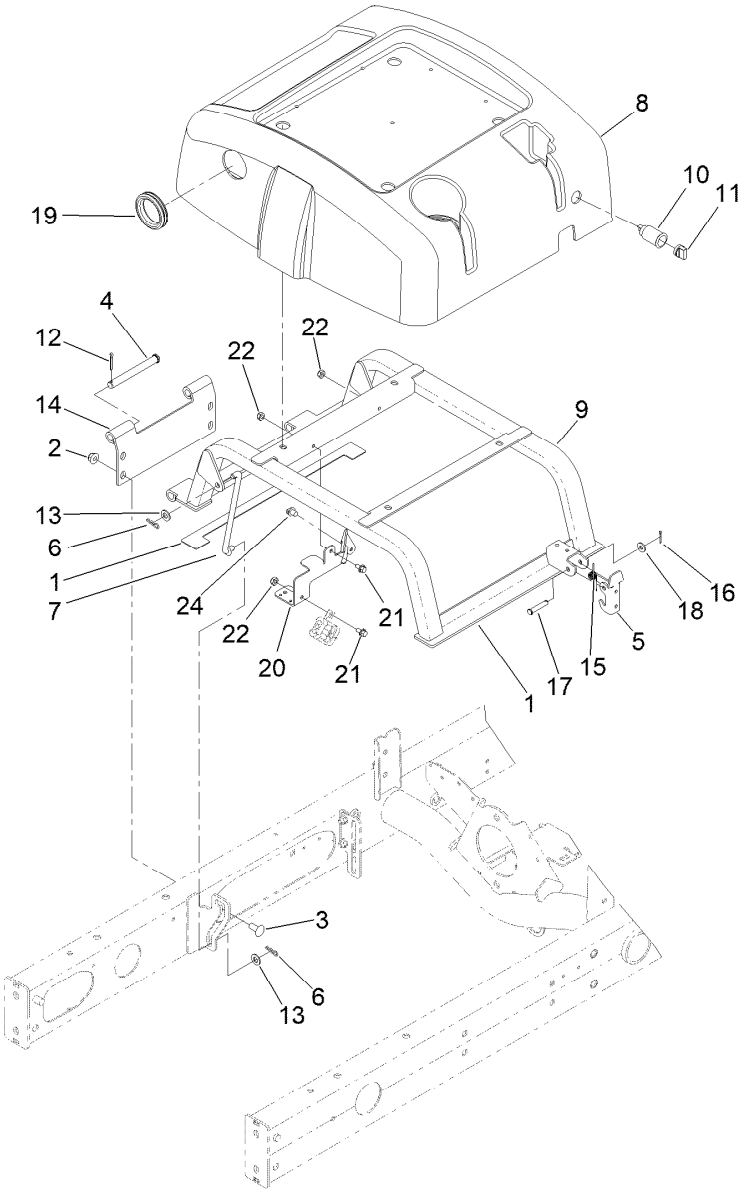

Seat Base Assembly

Ref.	Part Number	Qty.	Description
1	110-5255	2	Bumper-Base, Seat
2	104-8301	4	Nut-HF, NI
3	3231-27	4	Screw-CARR
4	283-83	2	Pin-Clevis
5	110-8971	1	Latch
6	3290-307	4	Pin-Cotter
7	98-0917	2	Rod-Prop
8	108-1757	1	Cover-Seatbase
9	125-2122-03	1	Seat Base ASM
10	99-7411	1	Point-Power
11	99-7416	1	Cap
12	3272-11	2	Pin-Cotter

Ref.	Part Number	Qty.	Description
13	3256-24	4	Washer-Flat
14	125-2121-03	1	Hinge-Seatbase
15	104-4821	1	Spring-Torsion
16	3272-6	1	Pin-Cotter
17	94-3829	1	Pin-Clevis
18	3256-2	1	Washer-Flat
19	240-12	1	Grommet-Rubber
20	127-2377-0P	1	Brkt-Harness
21	3234-13	2	Screw-HHF
22	3296-16	2	Nut-Lock, NI
24	32180-030	1	Clip-Tie

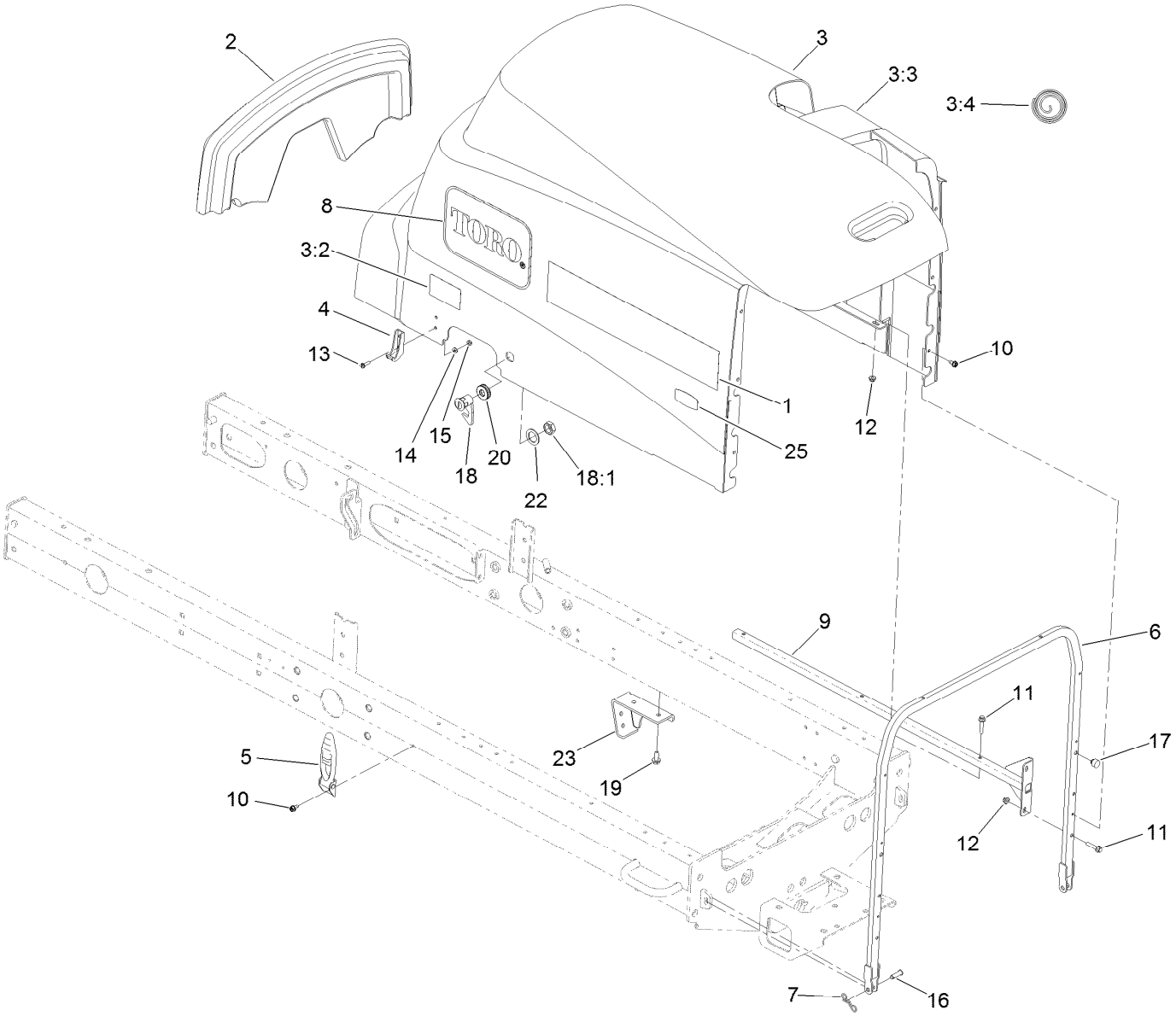

Hood Assembly

Ref.	Part Number	Qty.	Description
1	127-2304	2	Decal
2	108-7587	1	Saddle-Hood
3	110-8994	1	Hood ASM
3:2	106-6754	1	Decal-Danger
3:3	110-5252	1	Foam-Sealed
3:4	110-9002	1	Foil Tape Kit
4	103-2897	2	Latch-Catch
5	103-2898	2	Latch-Rubber
6	125-8819-03	1	Tube-Frame, Hood
7	105-7512	2	Pin-Tie, Bow
8	66-6140	2	Decal
9	108-1790-03	2	Tube
10	32104-17	8	Screw-HWH
11	3234-21	10	Screw-HHF

Ref.	Part Number	Qty.	Description
12	104-7201	10	Nut-HF, NI
13	32105-13	4	Screw-HWH
14	3256-14	4	Washer-Flat
15	3296-12	4	Nut-Lock, NI
16	283-61	2	Pin-Yoke
17	107-8042	2	Bumper-Rubber
18	98-5398	1	Latch
18:1	3218-20	1	Nut-Jam
19	32104-32	4	Screw-HWH
20	104-1453	1	Grommet
22	99-4958	1	Spacer
23	110-0979-03	2	Bracket-Deflector
25	119-7580	2	Decal-Smart, Energy

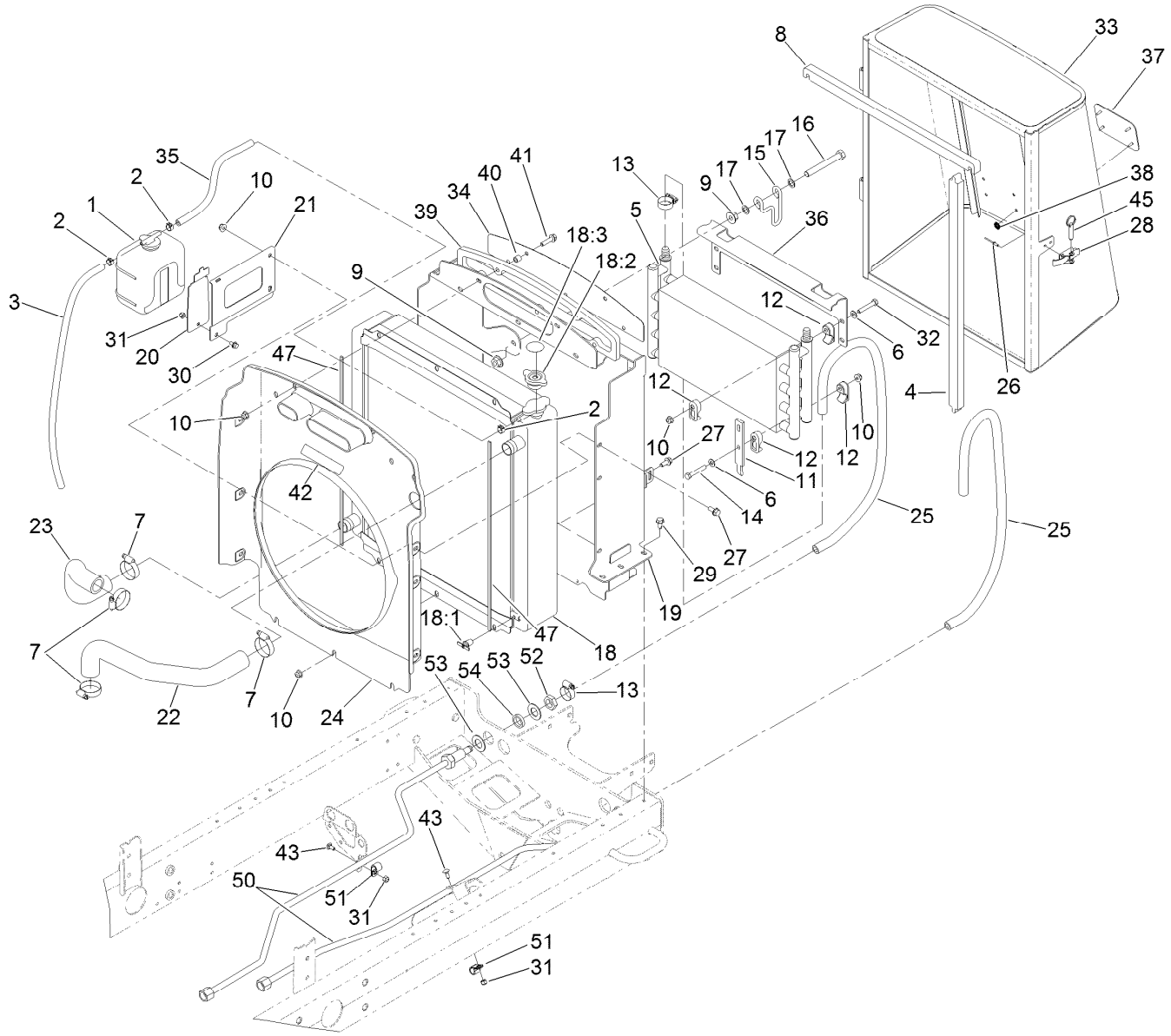

Radiator Assembly

Ref.	Part Number	Qty.	Description
1	108-0638	1	Bottle-Overflow
2	92-2379	3	Clamp-Hose
3	110-3257	1	Hose-Fuel
4	110-0967	2	Seal-Foam
5	127-2480	1	Cooler-Oil
6	3256-23	8	Washer-Plain
7	2412-34	4	Clamp-Hose
8	110-0968	2	Seal-Foam
9	32128-49	4	Nut-HHF
10	104-8300	22	Nut-HF, NI
11	104-5460-03	2	Plate-Mount, Oil Cooler
12	105-3943	16	Clamp-Cooler, Oil
13	2412-119	4	Clamp-Hose, Worm Drive
14	322-10	4	Screw-HH
15	104-5429	2	Clamp-Form, Wire
16	325-17	2	Screw-HH
17	41-8440	4	Washer
18	119-6956	1	Radiator ASM
18:1	304-46	1	Draincock
18:2	93-5957	1	Cap-Radiator
18:3	106-6755	1	Decal-Cap, Radiator

Ref.	Part Number	Qty.	Description
19	127-2665-03	1	Frame-Support, Radiator
20	108-1665-0P	1	Bracket - Reservior
21	108-1666-0P	1	Bracket - Reservoir
22	108-1696	1	Hose-Formed
23	108-1697	1	Hose-Formed
24	127-2474	1	Shroud-Fan
25	127-2346	2	Hose
26	3269-15	2	Rivet-Pop
27	3234-5	9	Screw-HHF
28	115-1554	1	Latch-Draw
29	32104-32	6	Screw-HWH
30	3234-13	1	Screw-HHF
31	3296-42	3	Nut-Lock, NI
32	322-21	4	Screw-HH
33	110-0952-03	1	Screen ASM
34	108-1843-0P	1	Screen - Air Intake
35	110-4104	1	Hose-Fuel
36	107-2043-03	1	Bracket-Oil Cooler, Top
37	93-6028	1	Plate-Logo
38	138-6996	4	Nut-Push
39	110-5324	1	Seal-Foam

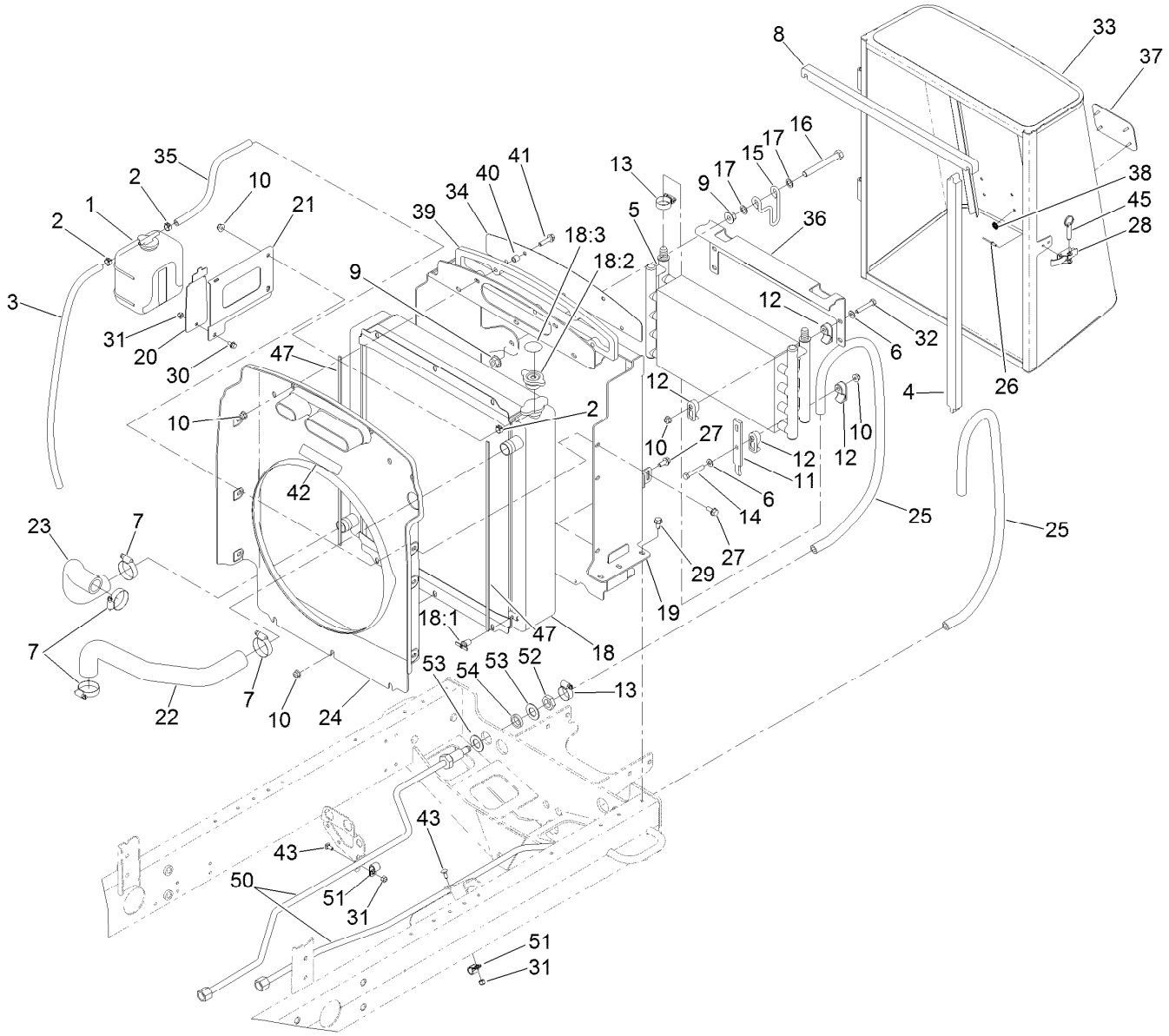

Radiator Assembly (continued)

Ref.	Part Number	Qty.	Description
40	1-603903	5	Spacer
41	3234-36	5	Screw-HHF
42	93-7272	1	Decal-Warning
43	3229-11	2	Screw-CARR
45	115-1556	1	Pin-Ball, Detent
47	110-0971	2	Seal-Foam

Ref.	Part Number	Qty.	Description
50	127-2475	2	Tube ASM
51	2412-73	2	Clamp-R
52	340-127	2	Nut-Bulkhead
53	69-8930	4	Washer
54	127-2344	2	Spacer

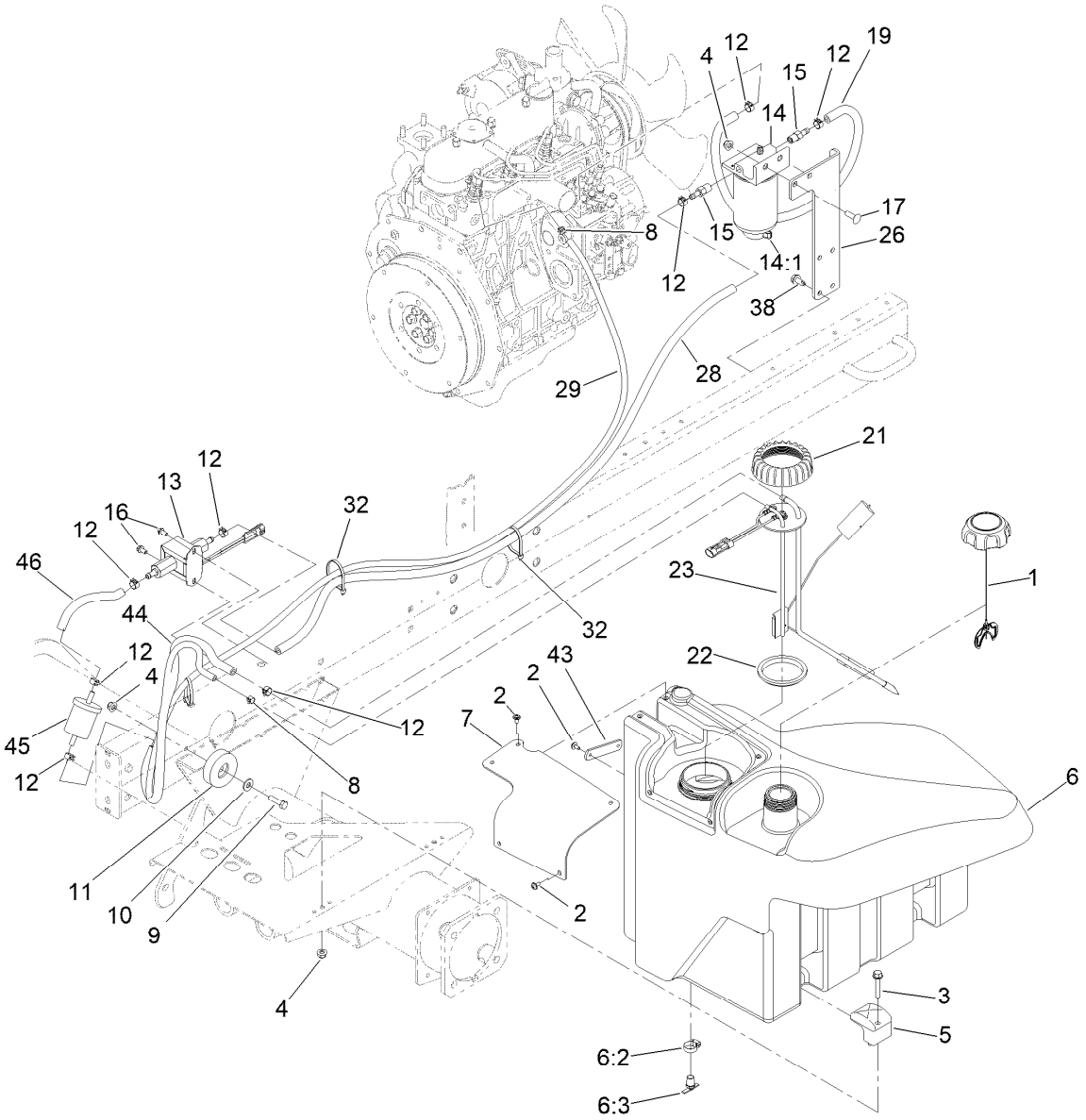

Fuel System Assembly

Ref.	Part Number	Qty.	Description
1	117-5894	1	Fuel Cap ASM
2	109-2661	7	Screw-PPH
3	94-5780	2	Screw-HWH
4	104-8300	5	Nut-HF, NI
5	107-4543	2	Clamp
6	125-2907	1	Fuel Tank ASM
6:2	2412-36	1	Clamp-Hose
6:3	304-46	1	Draincock
7	125-2903	1	Cover-Pump/Sender
8	2412-80	2	Clamp-Hose
9	322-6	1	Screw-HH
10	3256-3	1	Washer-Flat
11	108-1605	1	Bumper-Recess
12	92-2379	8	Clamp-Hose
13	145-3160	1	Pump-Fuel, Electric
14	110-9044	1	Separator-Filter
14:1	110-9049	1	Filter-Spin On, Fuel/Water

Ref.	Part Number	Qty.	Description
15	353-783	2	Fitting-STR
16	32144-4	2	Screw-HWH
17	3230-22	2	Screw-CARR
19	109-0309	1	Hose-Fuel
21	115-2162	1	Cap-Pump, Fuel
22	115-2163	1	Gasket-Pump, Fuel
23	121-5642	1	Sender-Fuel
26	110-8968-0P	1	Mount-Water Separator
28	110-3259	1	Hose-Fuel
29	125-8808	1	Hose-Fuel
32	3290-378	3	Tie-Cable
38	32104-32	4	Screw-HWH
43	125-2945	1	Strap-Cable
44	110-3257	1	Hose-Fuel
45	98-7612	1	Filter-Fuel
46	112-2386	1	Hose-Fuel

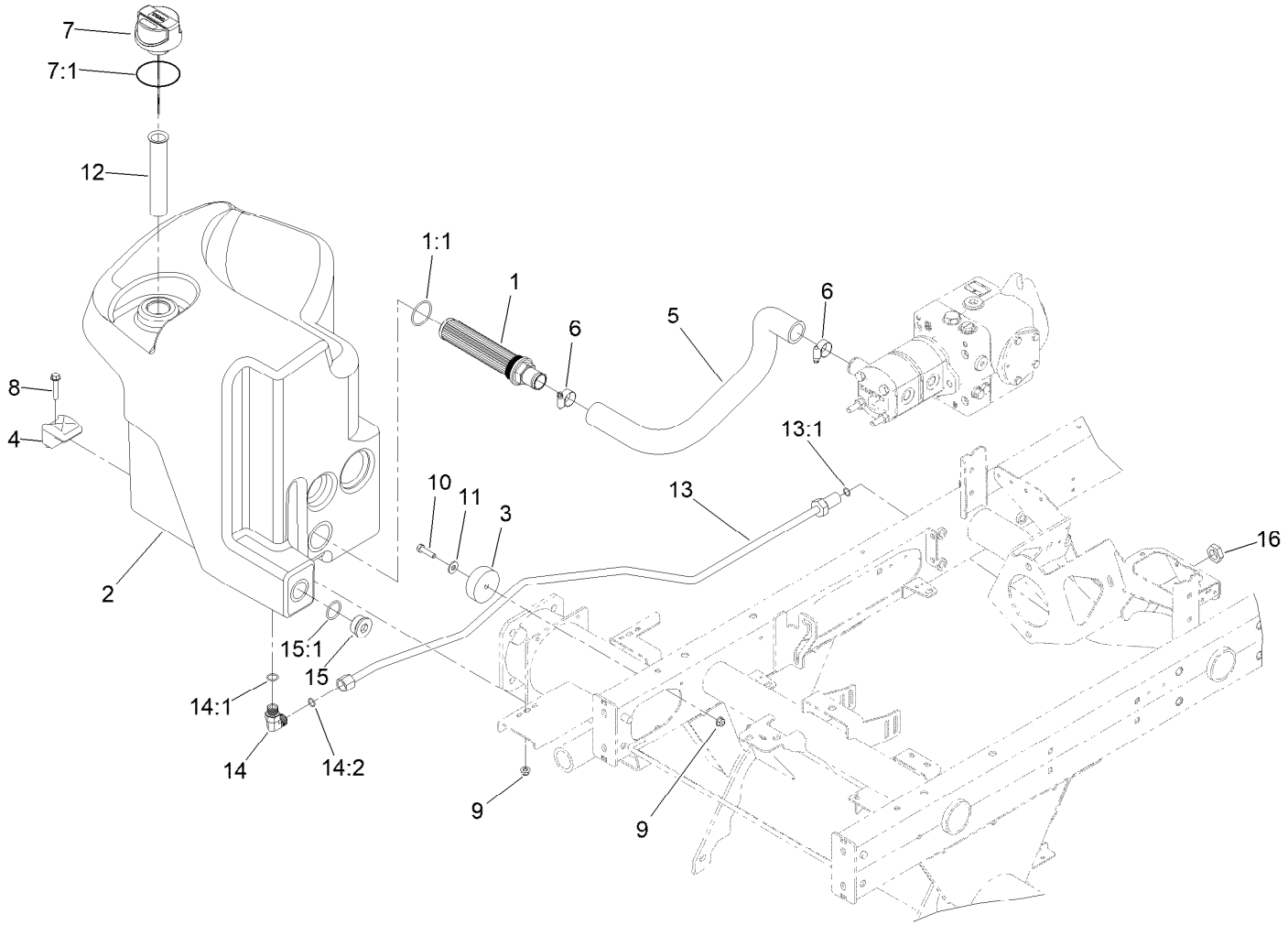

Hydraulic Tank Assembly

Ref.	Part Number	Qty.	Description
1	105-0131	1	Strainer-Tank, Oil
1:1	340-136	1	O-Ring
2	121-5587	1	Tank-Hydraulic
3	108-1605	1	Bumper-Recess
4	107-4543	2	Clamp
5	125-1527	1	Hose-Suction
6	2412-3	2	Clamp-Hose
7	117-0193	1	Cap-Hydraulic, Vented Breather
7:1	237-101	1	O-Ring
8	94-5780	2	Screw-HWH
9	104-8300	3	Nut-HF, NI

Ref.	Part Number	Qty.	Description
10	322-6	1	Screw-HH
11	3256-3	1	Washer-Flat
12	61-2790	1	Filter-Screen
13	127-2476	1	Tube-ASM.
13:1	237-30	1	O-Ring
14	340-98	1	Fitting-Elbow, 90 DEG
14:1	237-79	1	O-Ring
14:2	237-30	1	O-Ring
15	105-3921	1	Fitting-Plug
15:1	237-146	1	O-Ring
16	340-127	1	Nut-Bulkhead

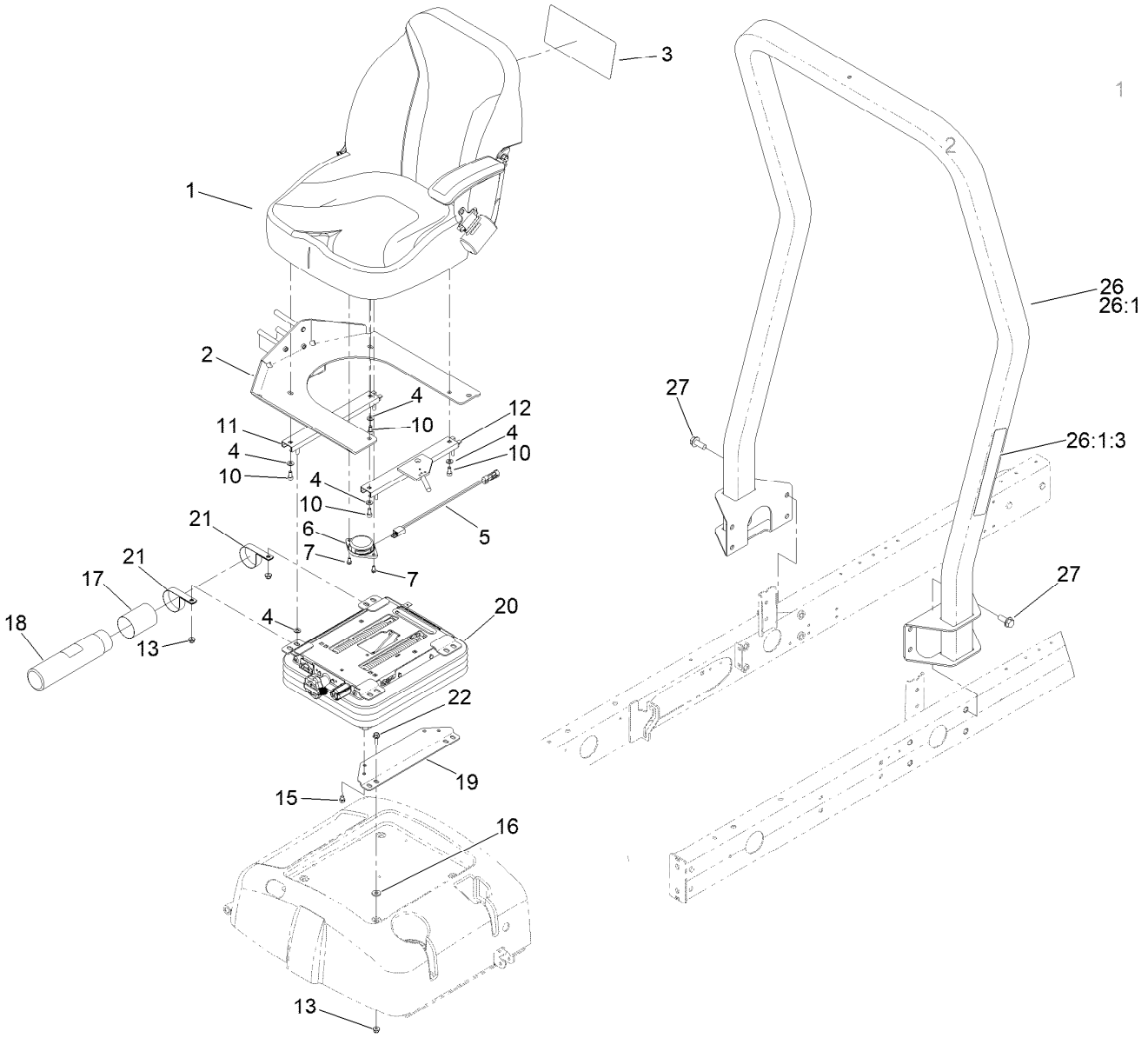

Seat Mounting Assembly

Ref.	Part Number	Qty.	Description
1	139-2700	1	Seat ASM
2	138-6985-03	1	Mount-Seat
3	136-3721	1	Decal-Service
4	3256-23	8	Washer-Plain
5	108-8657	1	Harness-Wire, Seat
6	136-9002	4	Spacer-Mounting
7	130-7100	1	Trim-Seatbase
10	3290-511	4	Screw-HSBH
11	92-8990	1	Adjuster-Seat, Non-Locking
12	92-8991	1	Adjuster (W/Latch)
13	104-8300	8	Nut-HF, NI
15	48-7680	4	Screw-HH

Ref.	Part Number	Qty.	Description
16	71-9310	4	Spacer
17	104-7048	1	Cap-Housing
18	104-7050	1	Tube-Manual
19	108-6590-0P	2	Bracket-Seat, Lower
20	110-8851	1	Mechanical Suspension ASM
21	2412-133	2	Clamp-R
22	3234-17	4	Screw-HHF
26	136-7954	1	ROPS ASM
26:1		1	ROPS ASM ●
26:1:3	136-3702	1	Decal-Safety, ROPS
27	3234-38	8	Screw-HHF

● Not serviced separately

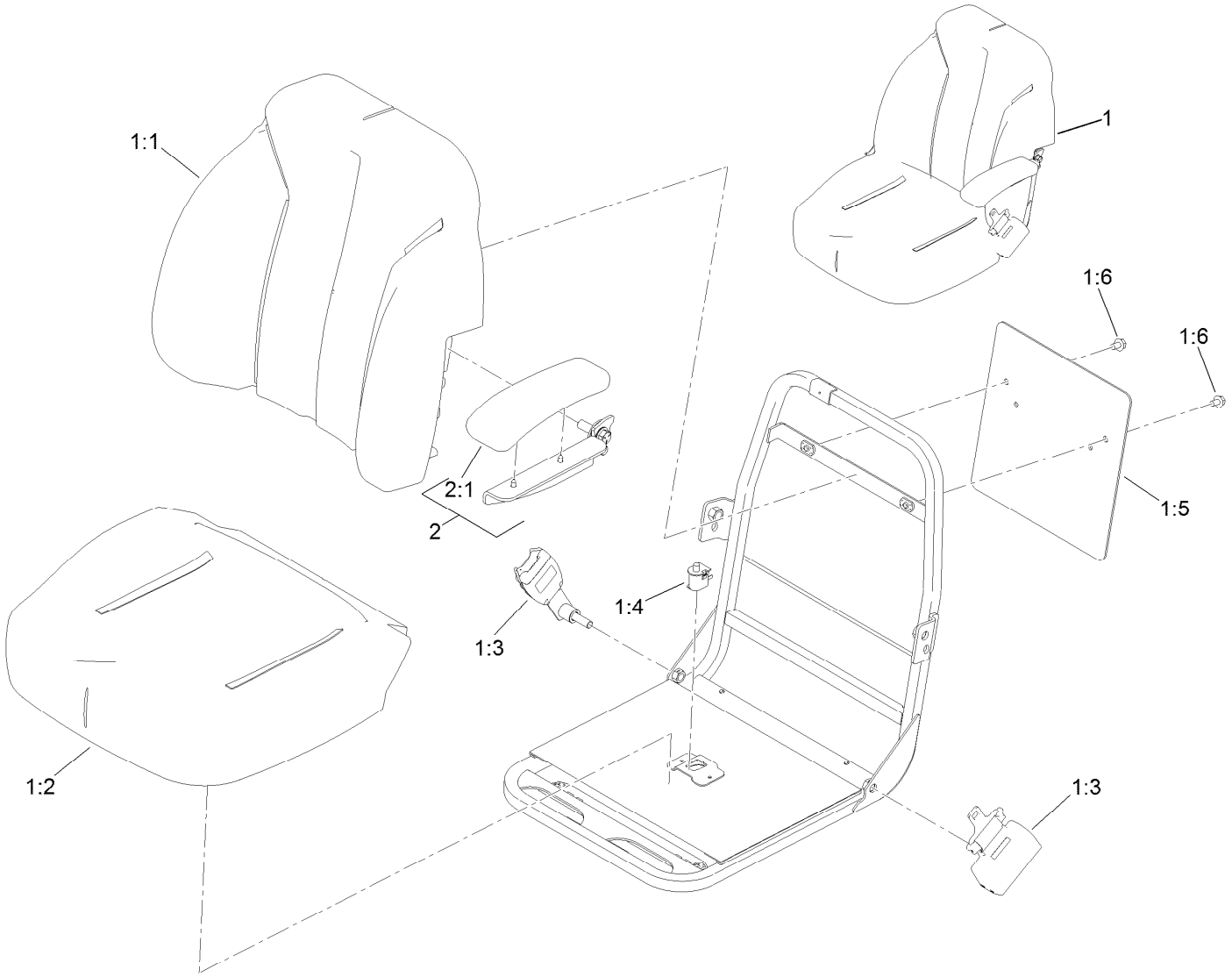

Seat Assembly No. 139-2700

Ref.	*Part Number*	*Qty.*	*Description*
1	139-2680	1	Seat ASM
1:1	145-0083	1	Cover-Seat, Back
1:2	145-0084	1	Cover-Seat, Bottom
1:3	139-2707	1	Seat Belt Kit
1:4	82-2190	1	Switch-Bail
1:5	139-2701	1	Plate-Decal
1:6	3234-30	2	Screw-HHF
2	121-3660	1	LH Arm Rest Kit
2:1	110-4163	1	Cushion-Rest, Arm

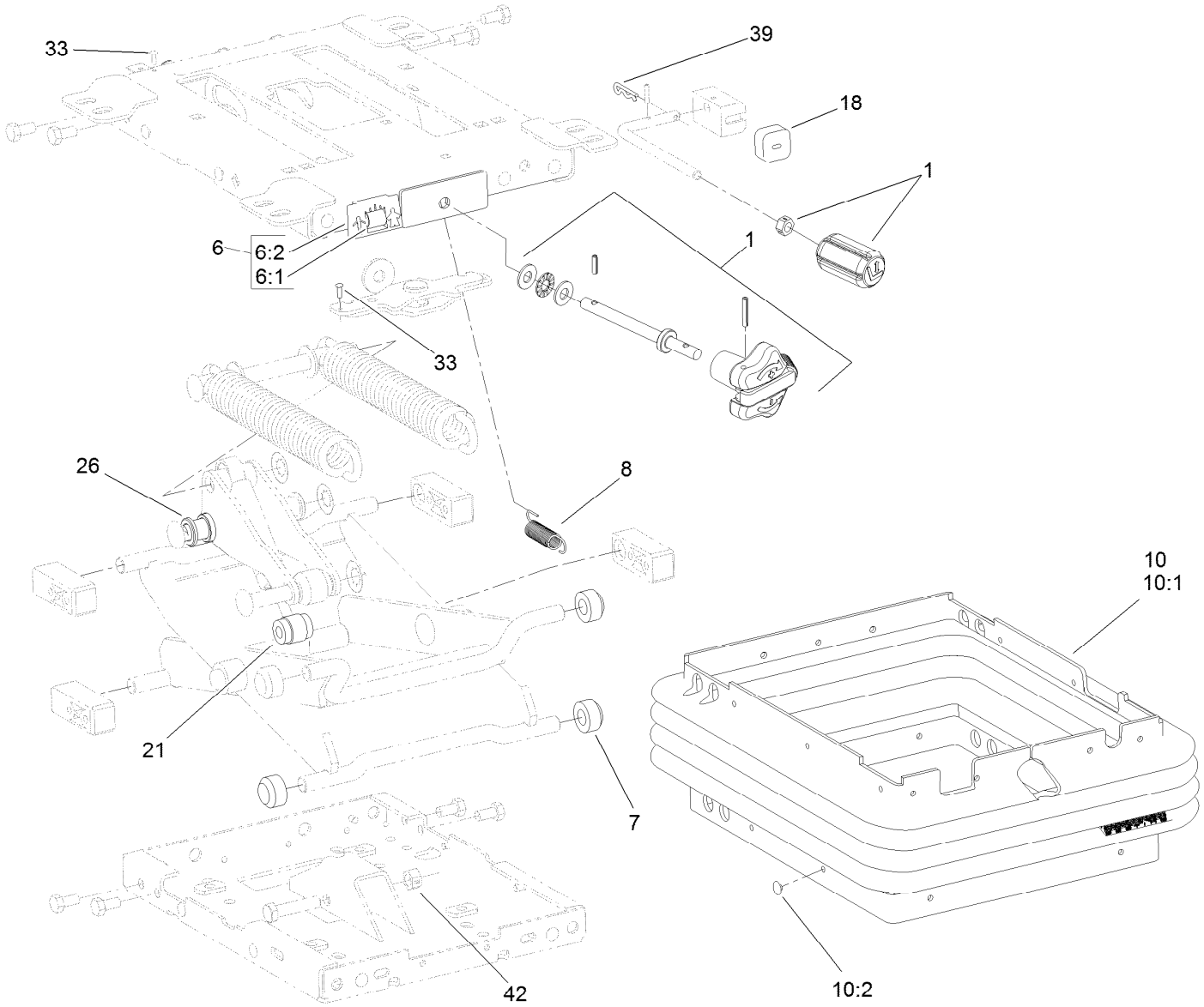

Mechanical Seat Suspension Assembly No. 110-8851

Ref.	*Part Number*	*Qty.*	*Description*
1	119-8040	1	Knobs Service Kit
6	108-4584	1	Weight Indicator Service Kit
6:1		1	Tape-Weight Adjust ●
6:2		1	Guide-Weight Adjust ●
7	108-9632	4	Roller
8	108-9633	1	Spring-Extension
10	112-0164	1	Boot Kit
10:1		1	Boot-Suspension ●
10:2	108-9641	21	Clip-Plug
18	108-9634	1	Bumper
21	108-9614	1	Damper
26	108-9622	2	Tube
33	3290-54	2	Rivet-Blind
39	3272-9	1	Pin-Cotter
42	32152-2	1	Nut-Lock, Cone

● Not serviced separately

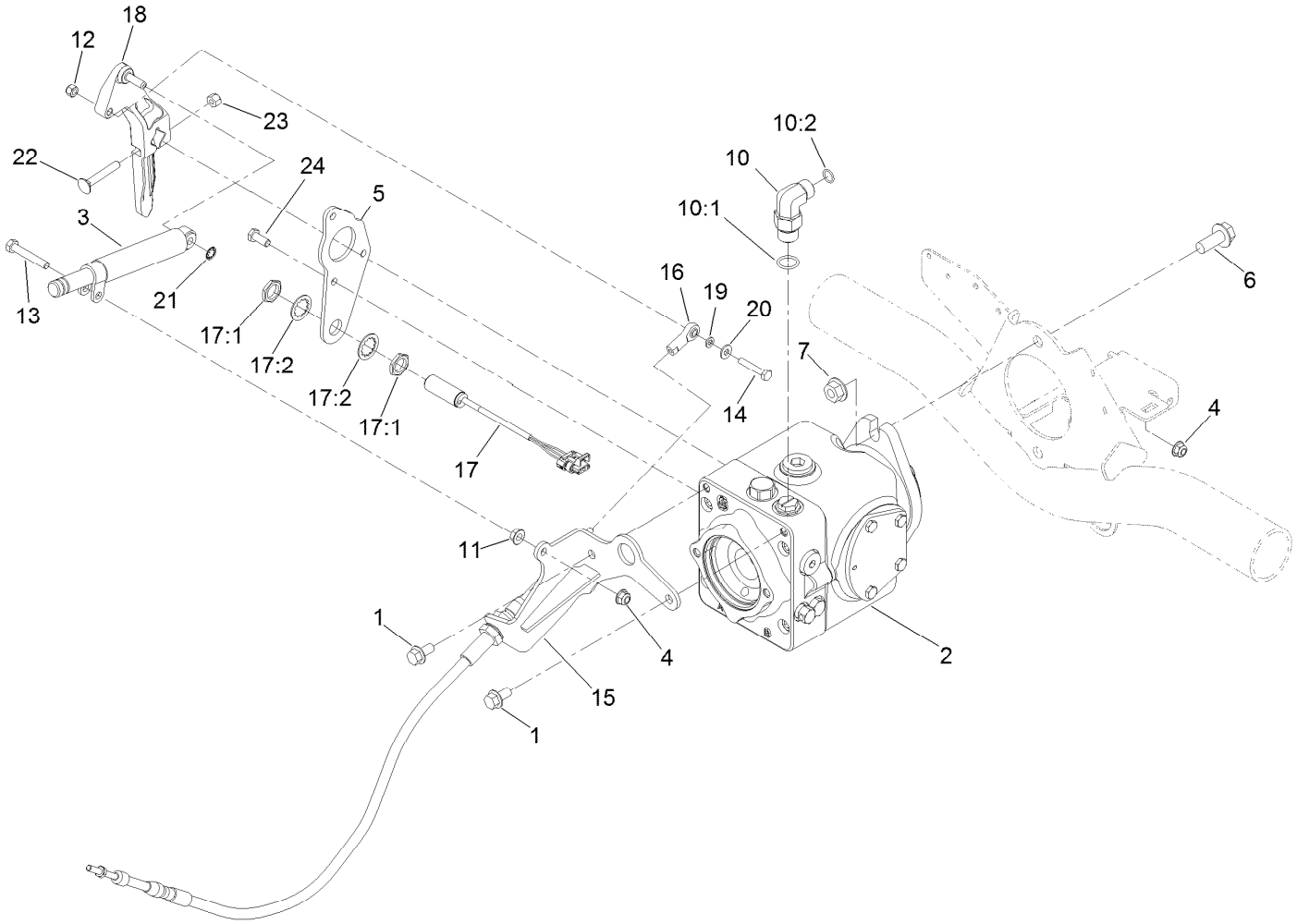

Traction Pump Mounting Assembly

Ref.	Part Number	Qty.	Description
1	3234-1	2	Screw-HHF
2	119-6972	1	Variable Hydraulic Pump ASM
3	140-6248	1	Damper
4	104-8300	1	Nut-HF, NI
5	125-8822-0P	1	Plate-Pump
6	3234-38	2	Screw-HHF
7	32128-49	2	Nut-HHF
10	340-105	1	Fitting-Elbow, 90 DEG
10:1	237-80	1	O-Ring
10:2	237-30	1	O-Ring
11	32128-20	1	Nut-HF
12	3296-42	1	Nut-Lock, NI
13	322-10	1	Screw-HH

Ref.	Part Number	Qty.	Description
14	321-9	1	Screw-HH
15	127-2356-0P	1	Brkt-Cable [primed]
16	2411-41	1	Rod End-Ball Joint
17	115-5300	1	Proximity Switch ASM
17:1	117-3207	2	Nut-Hex
17:2	117-3208	2	Washer-Lock, Internal Tooth
18	117-0265	1	Lever-Pump
19	33093-00	1	Washer-Flat
20	3256-22	1	Washer-Flat
21	32151-72	1	Ring-Retaining
22	3230-6	1	Bolt-CARR
23	3296-29	1	Nut-Lock, NI
24	33114-020	3	Screw-HH

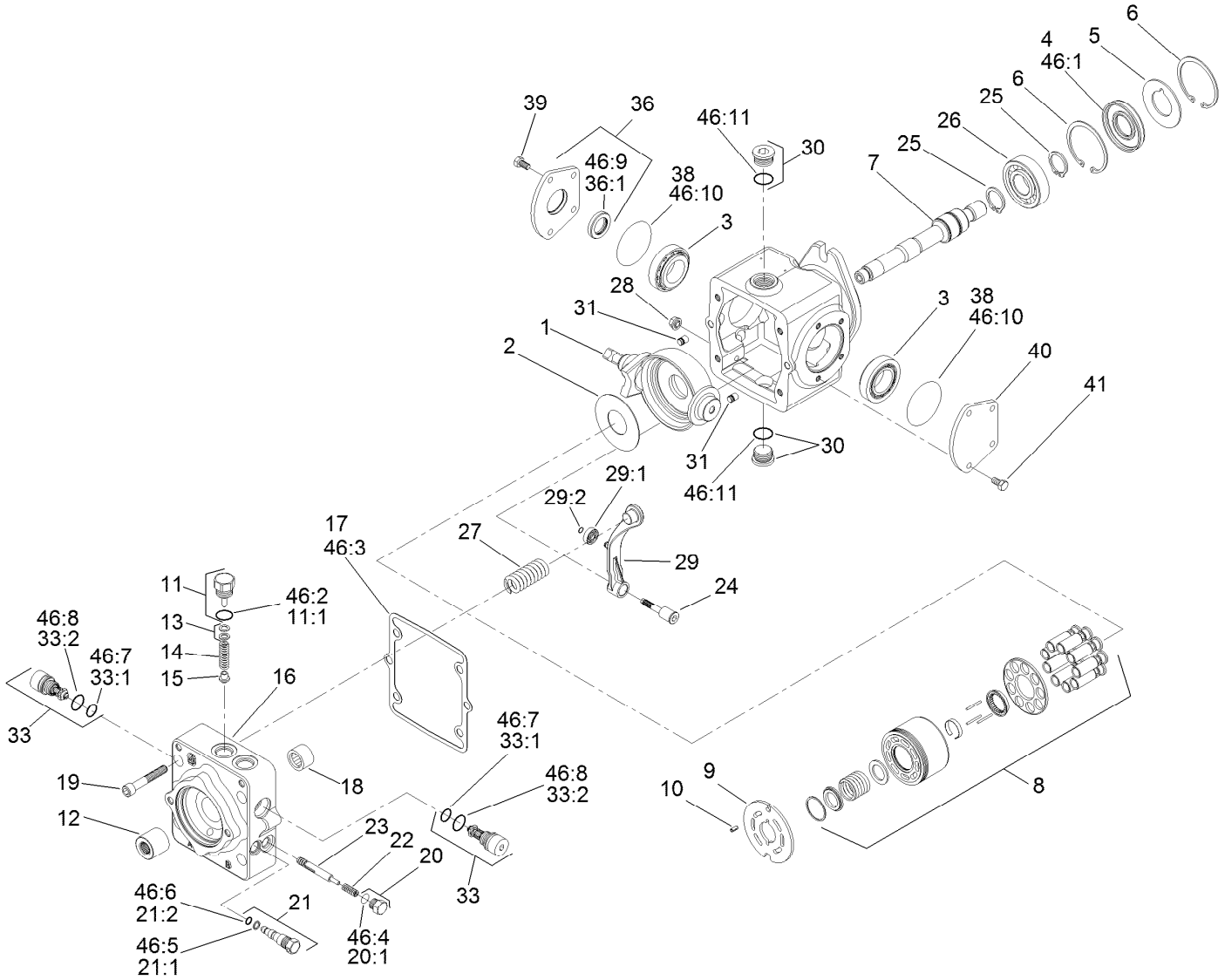

Hydraulic Pump Assembly No. 119-6972

Ref.	Part Number	Qty.	Description
1	115-8092	1	Swashplate
2	75-0400	1	Plate-Thrust
3	110-6483	2	Bearing Kit
4	110-6471	1	Seal-Lip
5	95-4400	1	Washer-Backup
6	69-3200	2	Ring-Retaining
7	110-6484	1	Shaft-Auxiliary
8	110-6472	1	Cylinder Block Kit ASM
9	110-6473	1	Plate-Valve (Clockwise)
10	110-6485	1	Pin-Slotted
11	110-6486	1	Plug-Relief, Charge
11:1	28-3570	1	O-Ring
12	110-6480	1	Coupling
13	92-1353	1	Shim Kit
14	110-6474	1	Spring
15	110-6475	1	Poppet
16	115-8087	1	Cap-End
17	110-6476	1	Gasket-Cap, End

Ref.	Part Number	Qty.	Description
18	75-0500	1	Bearing-Needle
19	110-6489	4	Screw
20	94-9415	2	Plug ASM
20:1		1	O-Ring ■
21	107-4364	1	Bypass Valve ASM
21:1	25-2630	1	Ring-Back Up
21:2	110-6498	1	O-Ring
22	110-6491	2	Spring
23	110-6492	1	Spool-Loop, Flush
24	110-6493	1	Pivot-Return, Neutral
25	69-3170	2	Ring-Retaining
26	75-0460	1	Bearing-Ball
27	115-8085	1	Spring-Neutral Return
28	110-6496	1	Nut-Seal
29	110-6497	1	Neutral Return Arm ASM
29:1	110-6494	1	Bearing-Cam
29:2	110-3056	1	Ring-Retaining
30	69-3130	2	Plug

● Not illustrated

■ Not serviced separately

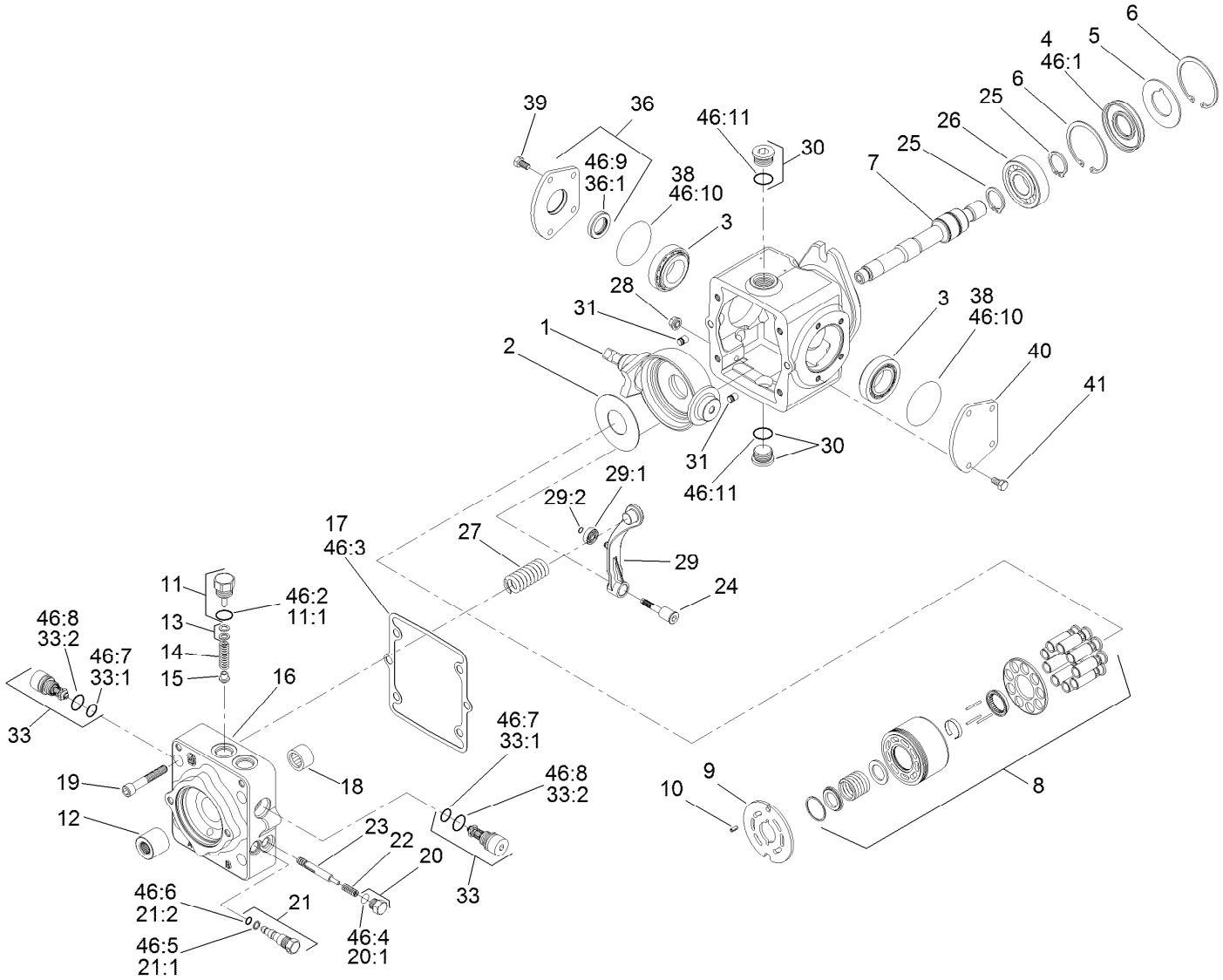

Hydraulic Pump Assembly No. 119-6972 (continued)

Ref.	Part Number	Qty.	Description
31	112-0158	2	Pin
33	110-6477	2	Valve-Relief
33:1	75-0240	1	O-Ring ●
33:2	84-0560	1	O-Ring ●
36	110-6499	1	Trunnion Cover ASM
36:1	110-6478	1	Seal-Lip
38	84-0430	2	O-Ring
39	112-0150	4	Screw
40	84-0440	1	Cover-Trunnion
41	112-0151	4	Screw
46	110-6481	1	Seal Kit ●

Ref.	Part Number	Qty.	Description
46:1	110-6471	1	Seal-Lip
46:2	28-3570	1	O-Ring
46:3	110-6476	1	Gasket-Cap, End
46:4	131-8631	2	O-Ring
46:5	25-2630	1	Ring-Back Up
46:6	110-6498	1	O-Ring
46:7	75-0240	2	O-Ring
46:8	84-0560	2	O-Ring
46:9	110-6478	1	Seal-Lip
46:10	84-0430	2	O-Ring
46:11	131-8614	2	O-Ring

● Not illustrated

■ Not serviced separately

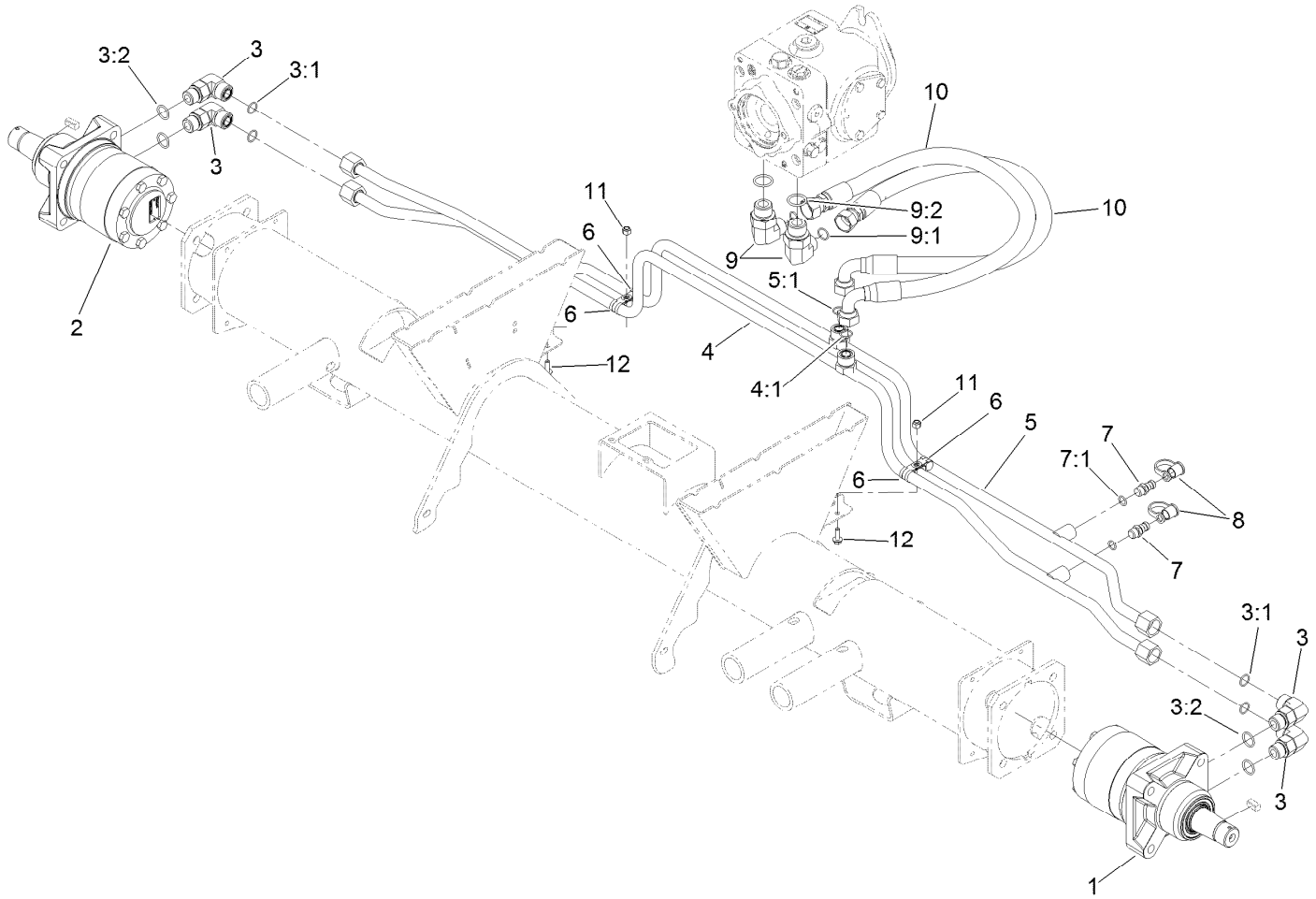

Traction Hydraulic Assembly

Ref.	Part Number	Qty.	Description
1	133-2935	1	Hydraulic Motor ASM
2	133-2934	1	Hydraulic Motor ASM
3	340-17	4	Fitting-Elbow, 90 DEG
3:1	237-65	1	O-Ring
3:2	237-80	1	O-Ring
4	125-1493	1	Tube ASM
4:1	237-65	1	O-Ring
5	125-1494	1	Tube ASM
5:1	237-65	1	O-Ring
6	2412-134	4	Clamp-R

Ref.	Part Number	Qty.	Description
7	59-7410	2	Fitting-Diagnostic
7:1	237-42	1	O-Ring
8	354-79	2	Cap-Dust
9	340-139	2	Fitting-Elbow 90
9:1	237-81	1	O-Ring
9:2	237-65	1	O-Ring
10	127-2300	2	Hose ASM
11	3296-42	2	Nut-Lock, NI
12	3234-4	2	Screw-HHF

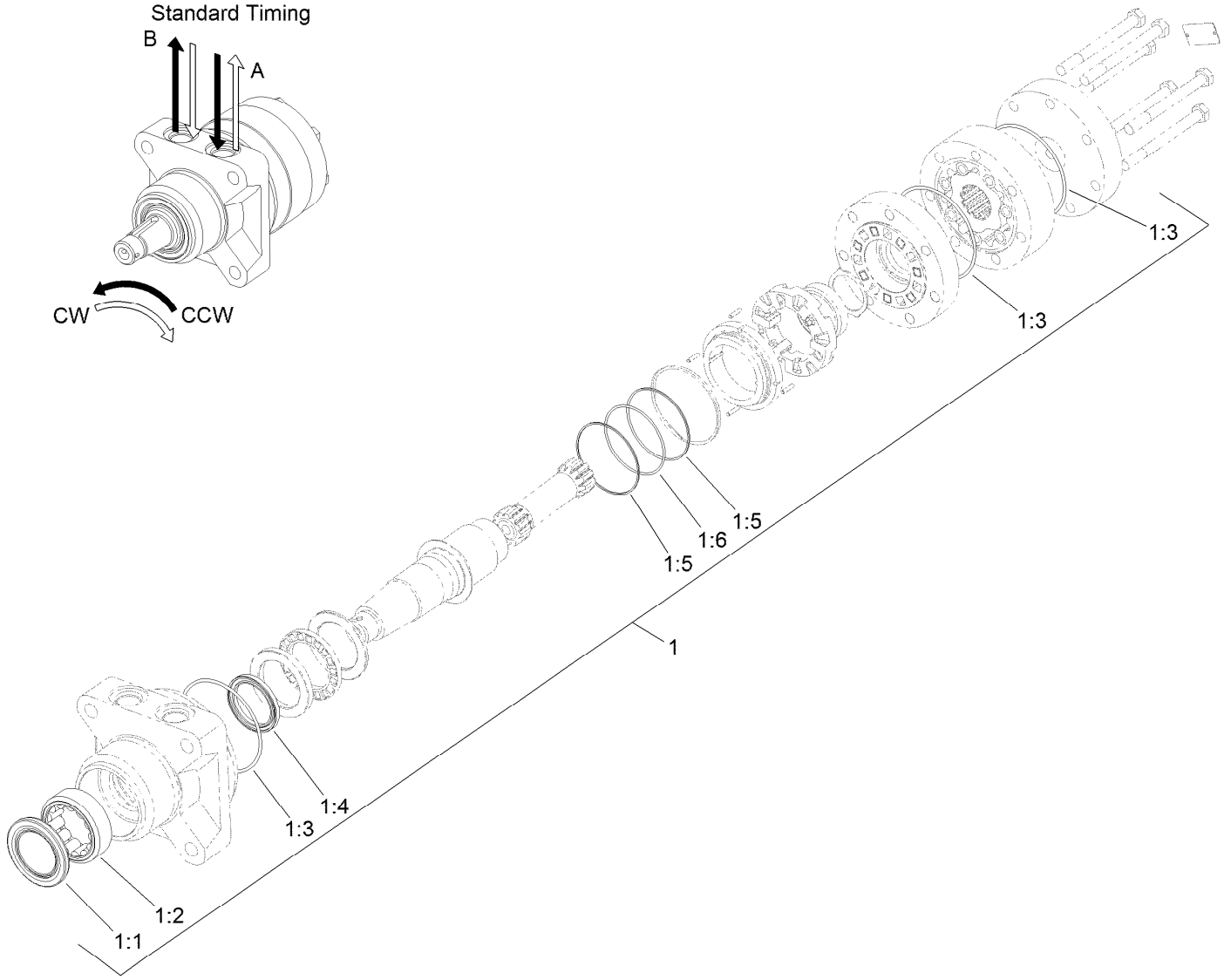

Hydraulic Motor Assembly No. 133-2935 (CCW)

Ref.	*Part Number*	*Qty.*	*Description*
1	120-6268	1	Seal Kit
1:1		1	Seal-Grease ●
1:2		1	Shell-Bearing ●
1:3		3	O-Ring ●
1:4		1	Seal-Shaft ●
1:5		2	Ring-Back Up ●
1:6		1	O-Ring ●

● Not serviced separately

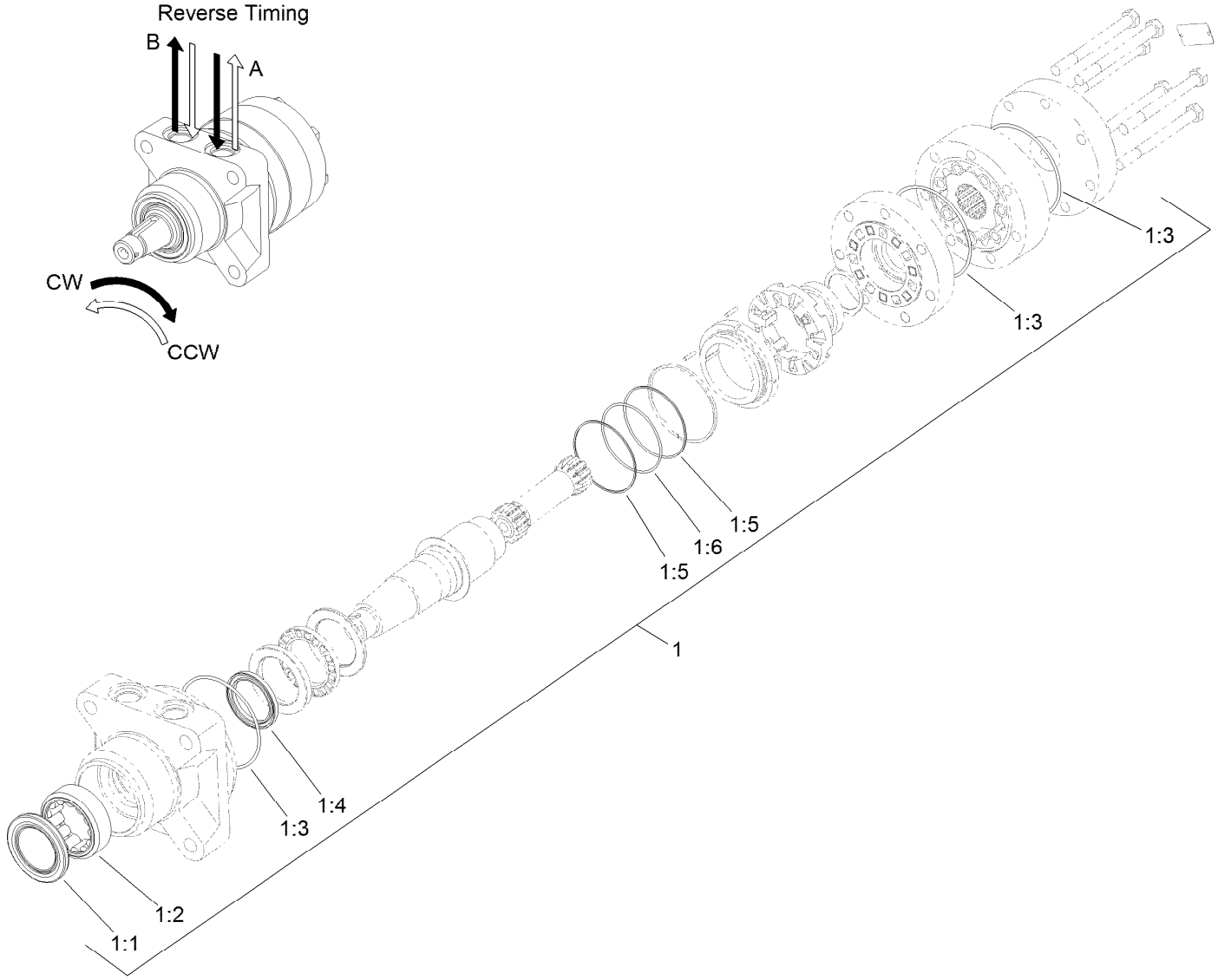

Hydraulic Motor Assembly No. 133-2934 (CW)

Ref.	*Part Number*	*Qty.*	*Description*
1	120-6268	1	Seal Kit
1:1		1	Seal-Grease ●
1:2		1	Shell-Bearing ●
1:3		3	O-Ring ●
1:4		1	Seal-Shaft ●
1:5		2	Ring-Back Up ●
1:6		1	O-Ring ●

● Not serviced separately

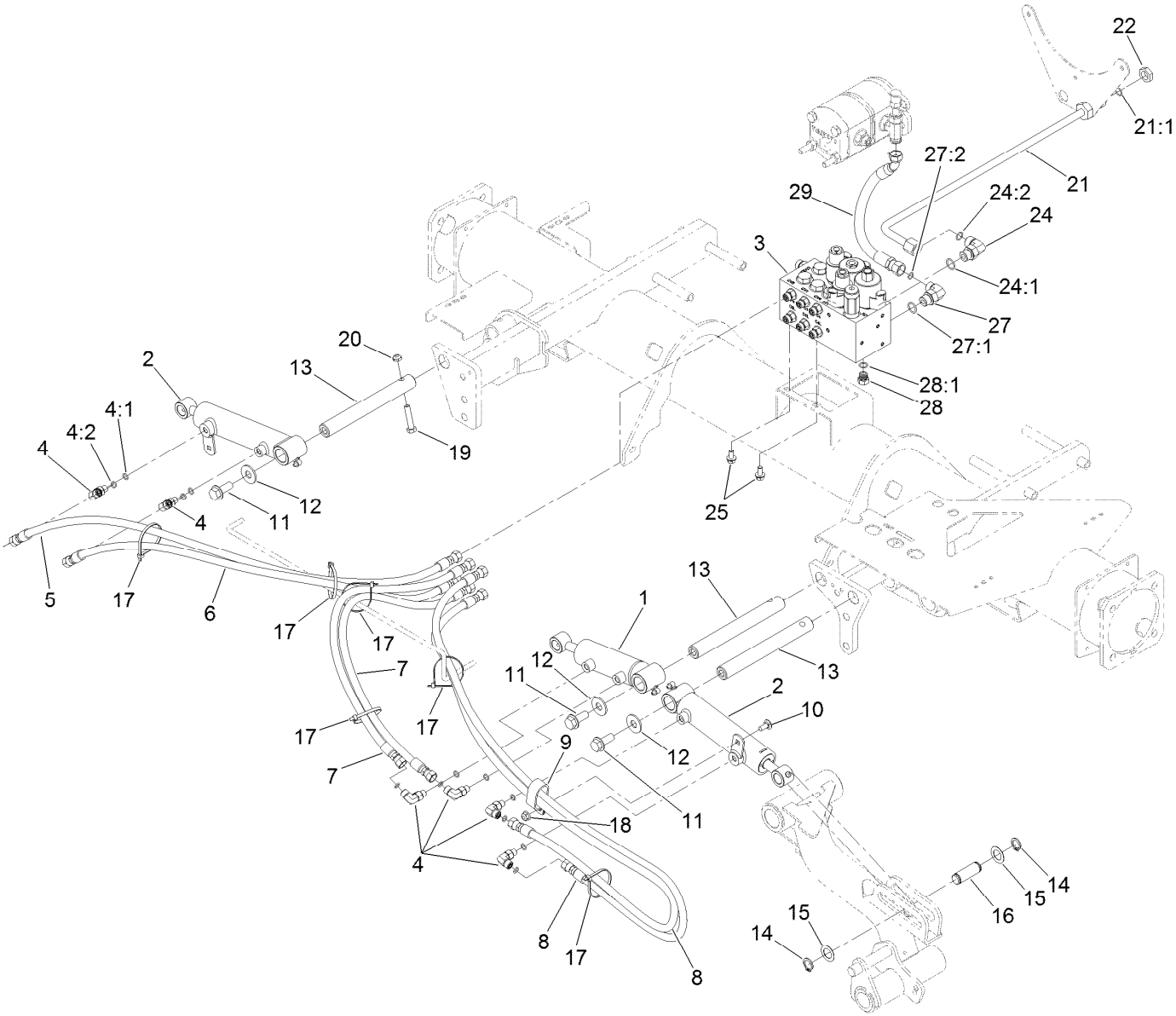

Front Lift Hydraulic Assembly

Ref.	Part Number	Qty.	Description
1	138-6999	1	HYD Cylinder ASM
2	119-6987	2	HYD Cylinder ASM
3	105-7577	1	HYD Lift Block Manifold ASM
4	340-132	6	Fitting-Elbow, 90 DEG
4:1	237-78	1	O-Ring
4:2	237-21	1	O-Ring
5	127-2498	1	Hose ASM
6	127-2499	1	Hose ASM
7	127-2497	2	Hose ASM
8	127-2496	2	Hose ASM
9	2412-137	1	Clamp-R, Double
10	3230-23	1	Bolt-CARR
11	3234-38	3	Screw-HHF
12	3256-6	3	Washer-Flat
13	117-0148	3	Pin-Cylinder
14	32120-93	6	Ring-Retaining
15	3-6498	6	Washer-Thrust

Ref.	Part Number	Qty.	Description
16	104-0046	3	Pin-Slide, Cylinder
17	3290-379	6	Tie-Cable
18	104-8300	1	Nut-HF, NI
19	323-9	3	Screw-HH
20	3296-59	3	Nut-Lock, NI
21	127-2477	1	Tube ASM
21:1	237-30	1	O-Ring
22	340-127	1	Nut-Bulkhead
24	340-98	1	Fitting-Elbow, 90 DEG
24:1	237-79	1	O-Ring
24:2	237-30	1	O-Ring
25	3234-14	2	Screw-HHF
27	340-18	1	Fitting-HYD, 90 DEG
27:1	237-79	1	O-Ring
27:2	237-22	1	O-Ring
28	353-508	1	Plug-HH
28:1	237-42	1	O-Ring
29	127-2535	1	Hose-ASM

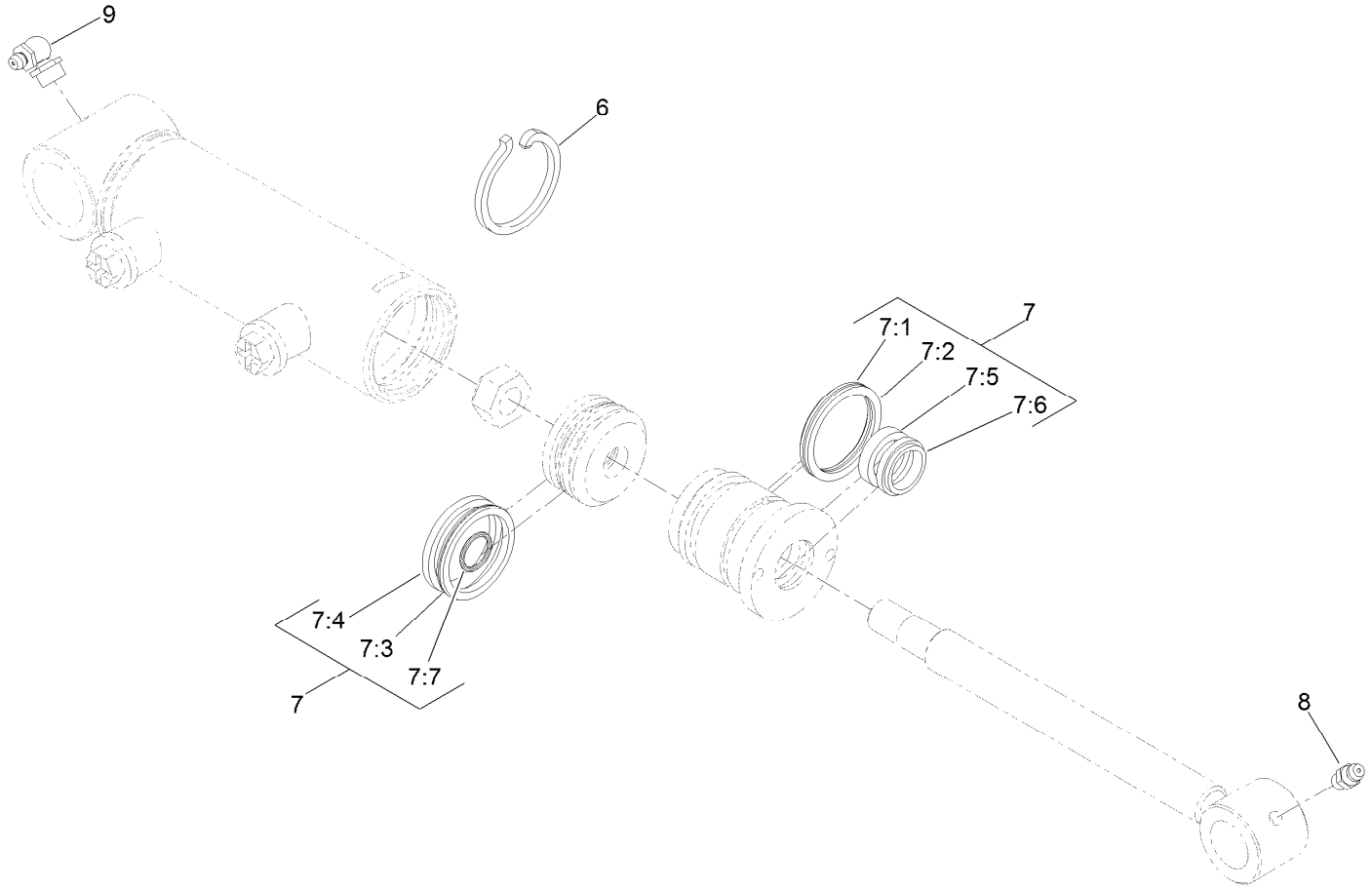

Hydraulic Cylinder Assembly No. 138-6999

Ref.	*Part Number*	*Qty.*	*Description*
6	84-1680	1	Ring-Retaining
7	133-2900	1	Seal Kit
7:1		1	O-Ring ●
7:2		1	Backup ●
7:3		1	Bp Seal ●
7:4		1	Wear Ring-Ht ●
7:5		1	Bt Seal ●
7:6		1	Dust Seal-Dt ●
7:7		1	O-Ring ●
8	302-5	1	Fitting-Grease
9	302-33	1	Fitting-Grease

● Not serviced separately

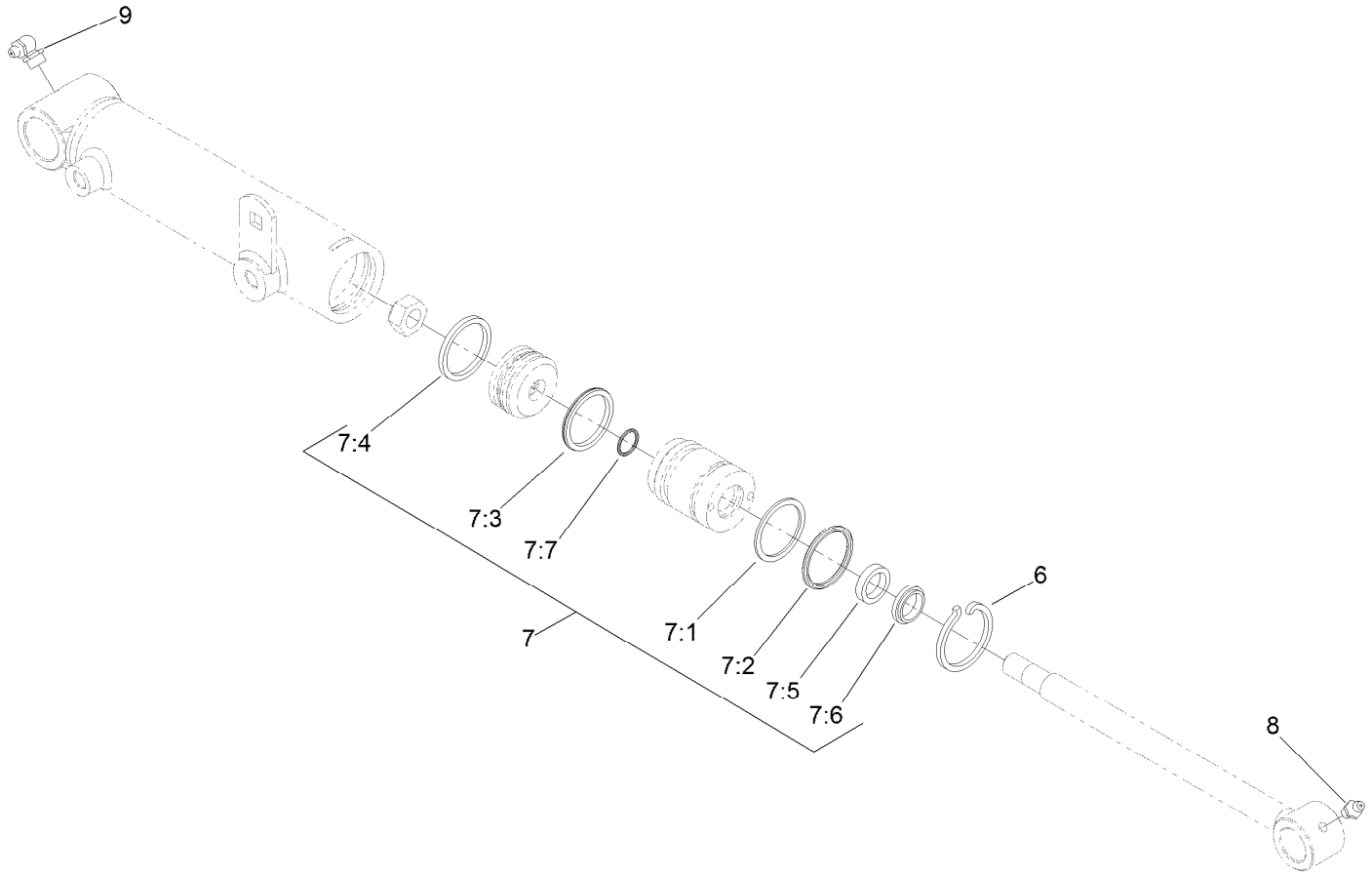

Hydraulic Cylinder Assembly No. 119-6987

Ref.	Part Number	Qty.	Description
6	84-1680	1	Ring-Retaining
7	133-2900	1	Seal Kit
7:1		1	O-Ring ●
7:2		1	Backup ●
7:3		1	Bp Seal ●
7:4		1	Wear Ring-Ht ●
7:5		1	Bt Seal ●
7:6		1	Dust Seal-Dt ●
7:7		1	O-Ring ●
8	302-5	1	Fitting-Grease
9	302-60	1	Fitting-Grease

● Not serviced separately

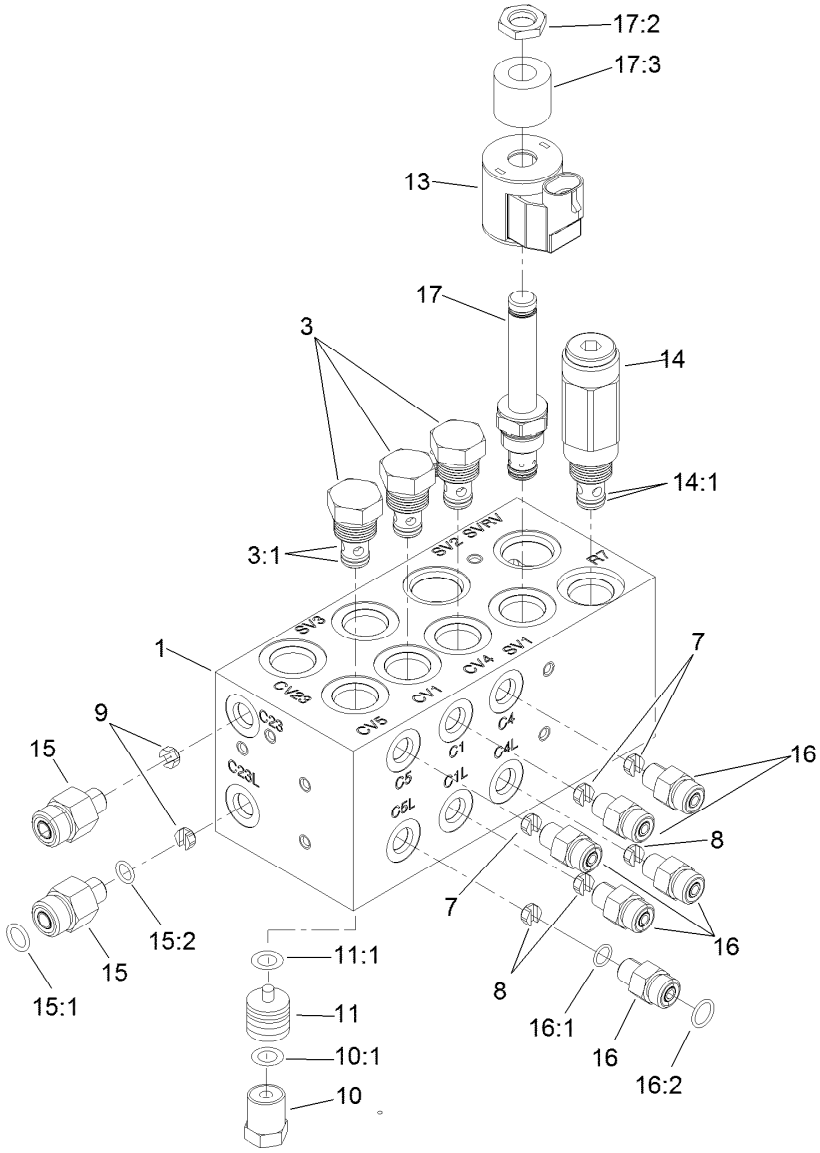

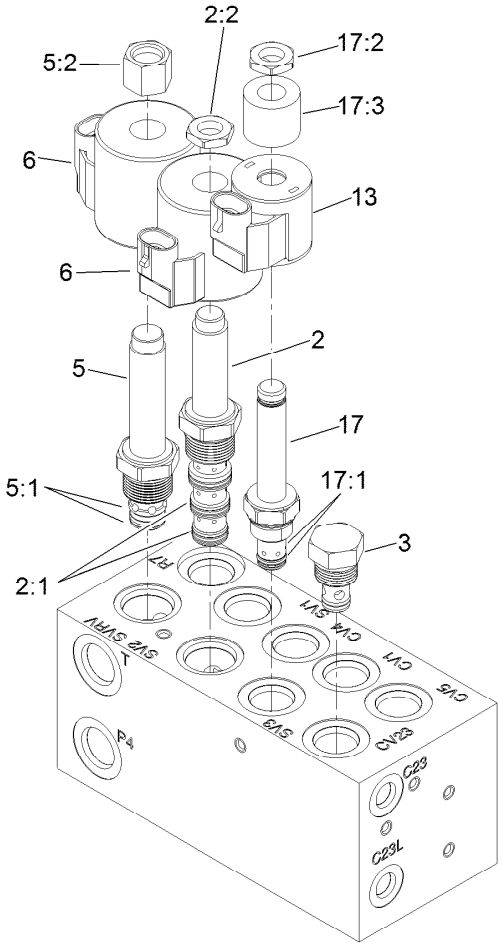

Hydraulic Manifold Block Assembly No. 105-7577

Ref.	Part Number	Qty.	Description
1		1	Block-Manifold ■
2	110-8906	1	Valve-Solenoid
2:1	110-8908	1	Spool Valve Seal Kit
2:2	110-2634	1	Nut-Coil
3	110-9006	4	Valve-Check
3:1	105-9156	1	Seal Kit
5	110-8905	1	Valve-Relief, Solenoid
5:1	110-6316	1	Seal Kit
5:2	130-8180	1	Nut-Coil (9/16-24 Unef-2B)
6	110-6344	2	Coil-12V, DC
7	110-8904	3	Orifice-Control, Flow (0.028)
7	125-8849	3	Orifice-Flow Control ●
8	110-8903	3	Orifice-Control, Flow (0.055)
9	110-8902	2	Orifice-Control, Flow (0.046)
10	354-70	4	Plug-Hex, Hollow
10:1	237-80	1	O-Ring

Ref.	Part Number	Qty.	Description
11	110-8901	4	Piston-Pilot
11:1	110-8900	1	O-Ring
13	110-0497	2	Coil-Solenoid
14	110-8899	1	Valve-Relief
14:1	105-9156	1	Seal Kit
15	340-88	2	Fitting-Straight
15:1	237-22	1	O-Ring
15:2	237-78	1	O-Ring
16	340-92	6	Fitting-Straight
16:1	237-78	1	O-Ring
16:2	237-21	1	O-Ring
17	110-8898	2	Valve-Solenoid
17:1	107-7527	1	Seal Kit
17:2	110-2634	1	Nut-Coil
17:3	110-8909	1	Spacer-Coil

● Optional Equipment

■ Not serviced separately

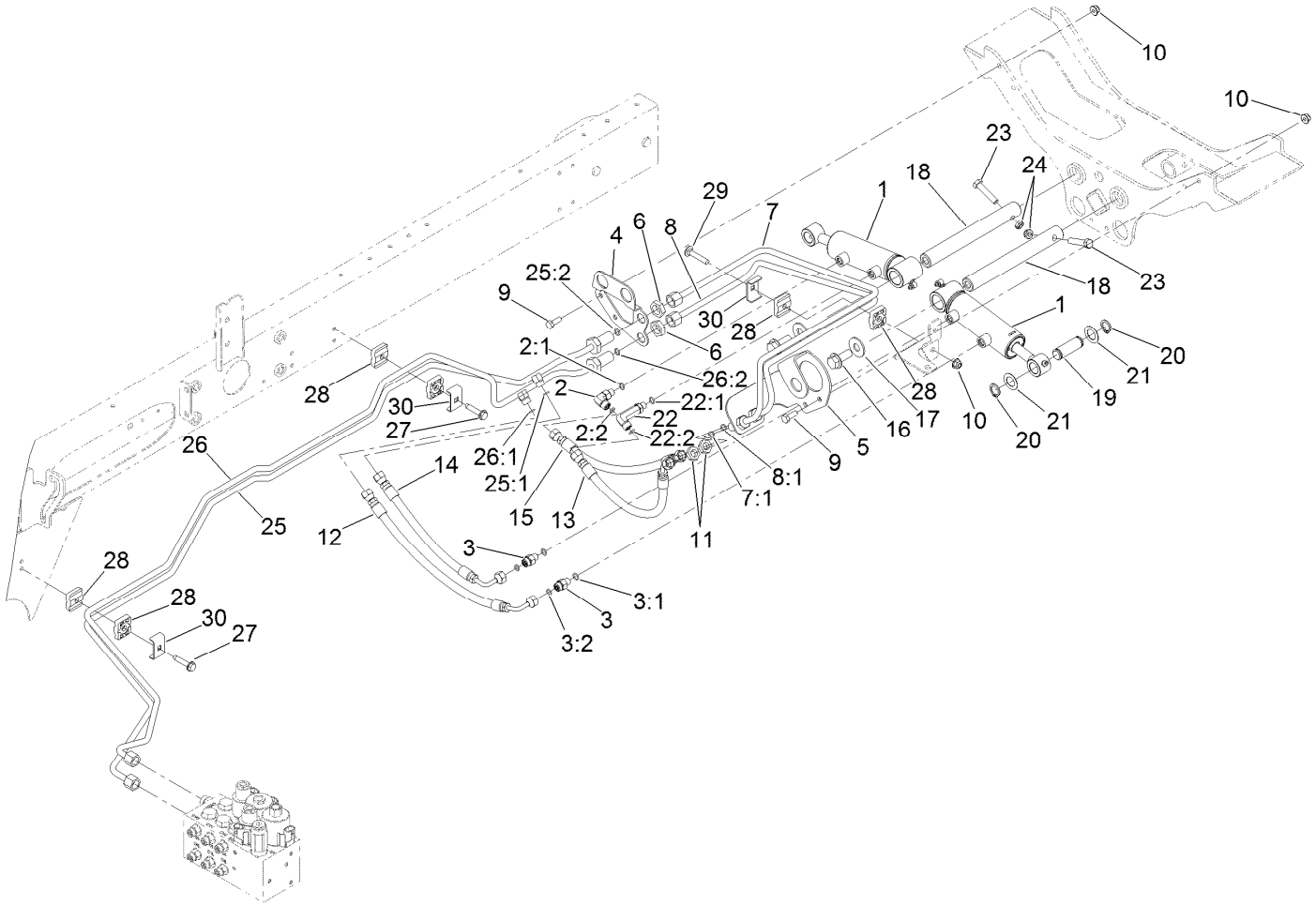

Rear Lift Hydraulic Assembly

Ref.	Part Number	Qty.	Description
1	138-6999	2	HYD Cylinder ASM
2	340-132	1	Fitting-Elbow, 90 DEG
2:1	237-78	1	O-Ring
2:2	237-21	1	O-Ring
3	340-92	2	Fitting-Straight
3:1	237-78	1	O-Ring
3:2	237-21	1	O-Ring
4	127-2568-0P	1	Bracket-Bulkhead, RH
5	127-2567-0P	1	Bracket-Bulkhead, LH
6	340-70	2	Nut-Lock
7	133-2987	1	Tube-ASM
7:1	237-21	1	O-Ring
8	133-2986	1	Tube-ASM
8:1	237-21	1	O-Ring
9	322-4	4	Screw-HH
10	104-8300	5	Nut-HF, NI
11	340-78	2	Nut-Lock
12	110-0930	1	Hose-HYD
13	110-8966	1	Hose-HYD
14	110-0929	1	Hose-HYD
15	110-0931	1	Hose-HYD

Ref.	Part Number	Qty.	Description
16	3234-38	2	Screw-HHF
17	3256-6	2	Washer-Flat
18	117-0148	2	Pin-Cylinder
19	104-0046	2	Pin-Slide, Cylinder
20	32120-93	4	Ring-Retaining
21	3-6498	4	Washer-Thrust
22	100-7695	1	Fitting-Elbow 90
22:1	237-78	1	O-Ring
22:2	237-21	1	O-Ring
23	323-9	2	Screw-HH
24	3296-59	2	Nut-Lock, NI
25	125-1489	1	Tube ASM
25:1	237-21	1	O-Ring
25:2	237-22	1	O-Ring
26	125-1488	1	Tube ASM
26:1	237-21	1	O-Ring
26:2	237-22	1	O-Ring
27	32144-57	2	Screw
28	56-7973	6	Clamp-Tube
29	3230-5	1	Bolt-CARR
30	119-1418	4	Plate-Clamp, Short

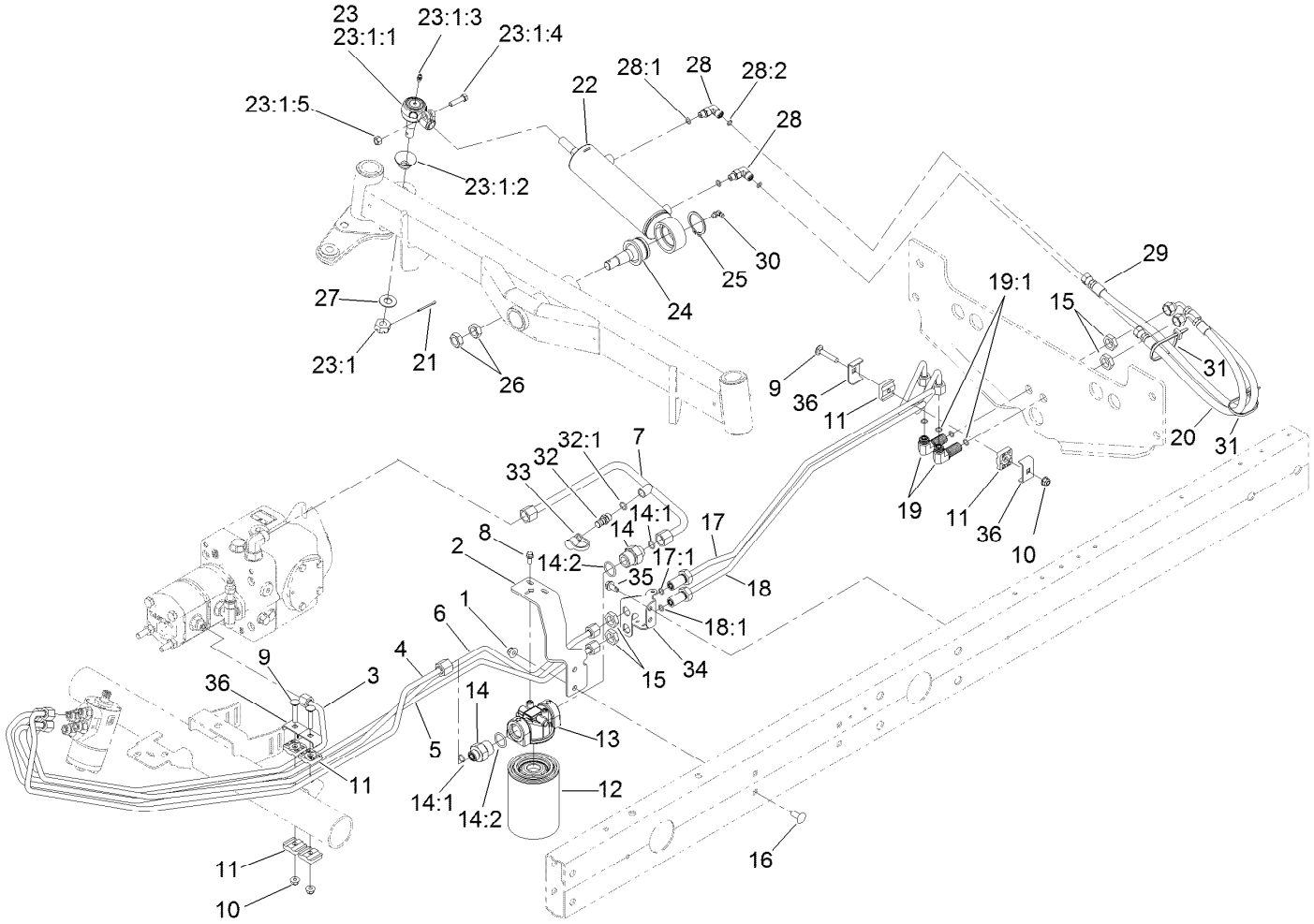

Steering Hydraulic Assembly

Ref.	Part Number	Qty.	Description
1	104-8301	2	Nut-HF, NI
2	110-0906-0P	1	Support - Filter, Oil
3	127-2500	1	Tube-Assembly
4	108-1711	1	Tube-HYD
5	127-2335	1	Tube ASM
6	127-2336	1	Tube ASM
7	125-1437	1	Tube ASM
8	3234-33	2	Screw-HHF
9	3230-5	3	Bolt-CARR
10	104-8300	3	Nut-HF, NI
11	56-7973	6	Clamp-Tube
12	86-3010	1	Filter-Oil
13	117-5820	1	Head-Filter
14	100-4240	2	Fitting-STR
14:1	237-30	1	O-Ring
14:2	237-81	1	O-Ring
15	340-70	4	Nut-Lock
16	3231-27	2	Screw-CARR

Ref.	Part Number	Qty.	Description
17	136-3729	1	Hydraulic Tube ASM
17:1	237-22	1	O-Ring
18	127-2338	1	Tube ASM
18:1	237-22	1	O-Ring
19	340-154	2	Union-Bulkhead
19:1	237-22	2	O-Ring
20	110-0928	1	Hose-HYD
21	3272-12	1	Pin-Cotter
22	110-9035	1	HYD Cylinder ASM
23	106-6895-03	1	Ball Joint ASM
23:1		1	Joint-Ball ●
23:1:1	32136-13	1	Nut-SHH
23:1:2	106-6896	1	Seal
23:1:3	302-5	1	Fitting-Grease
23:1:4	3210-7	1	Screw-HH
23:1:5	32152-5	1	Nut-Hex
24	106-6774	1	Joint-Ball
25	32151-104	1	Ring-Retaining, External

● Not serviced separately

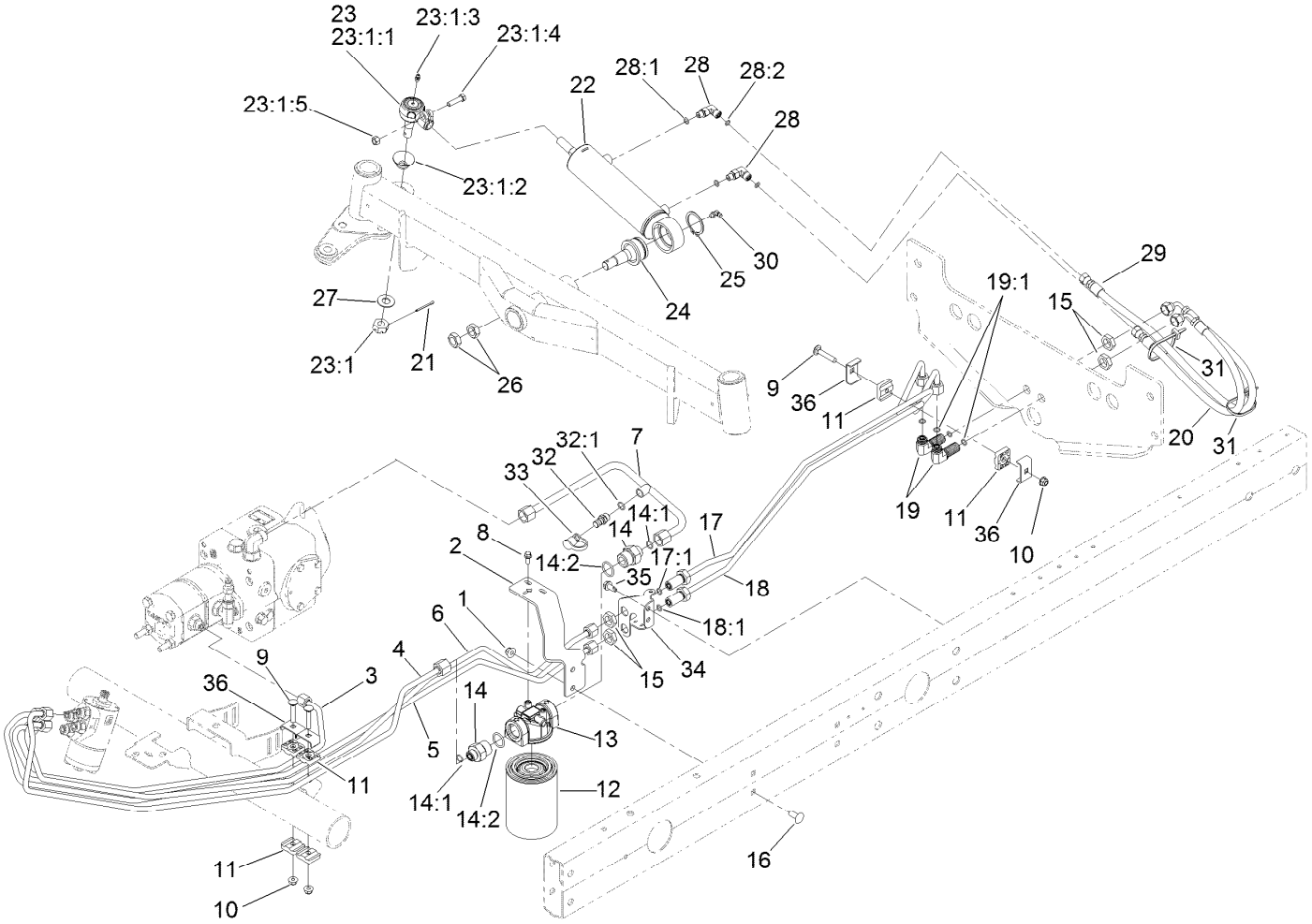

Steering Hydraulic Assembly (continued)

Ref.	Part Number	Qty.	Description
26	3220-6	2	Nut-Jam
27	69-8980	1	Washer
28	340-132	2	Fitting-Elbow, 90 DEG
28:1	237-78	1	O-Ring
28:2	237-21	1	O-Ring
29	110-0973	1	Hose-HYD
30	302-40	1	Fitting-Grease, 90 DEG

Ref.	Part Number	Qty.	Description
31	3290-378	2	Tie-Cable
32	59-7410	1	Fitting-Diagnostic
32:1	237-42	1	O-Ring
33	354-79	1	Cap-Dust
34	127-2341-0P	1	Brkt-Bulkhead, Steer
35	32104-32	2	Screw-HWH
36	119-1418	4	Plate-Clamp, Short

● Not serviced separately

Hydraulic Cylinder Assembly No. 110-9035

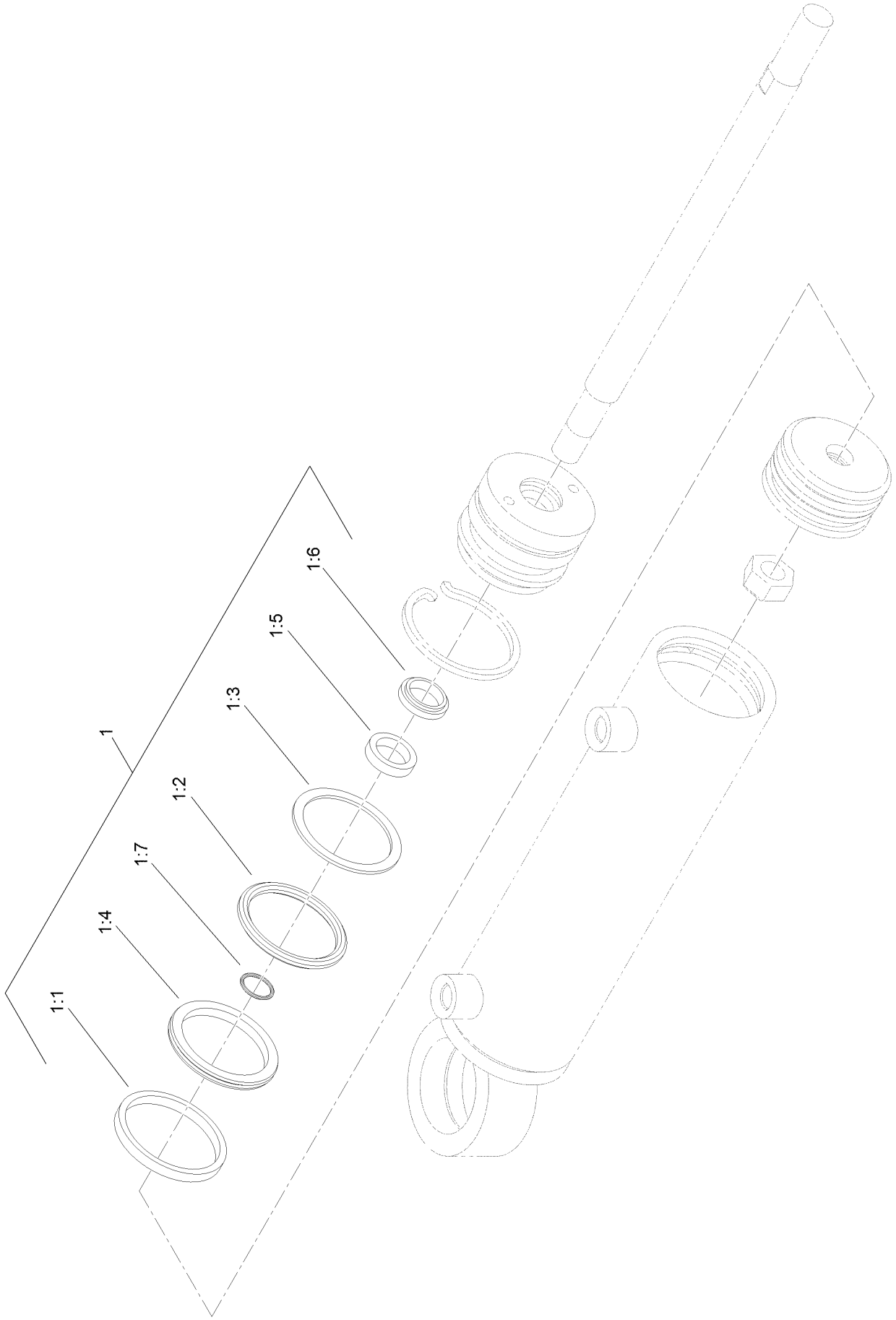

Hydraulic Cylinder Assembly No. 110-9035 (continued)

Ref.	Part Number	Qty.	Description
1	114-8875	1	Seal Kit
1:1		1	O-Ring ●
1:2		1	Backup ●
1:3		1	Bp Seal ●
1:4		1	Wear Ring ●
1:5		1	Bt Seal ●
1:6		1	Dust Seal ●
1:7		1	O-Ring ●

● Not serviced separately

Engine, Air Cleaner and Muffler Assembly

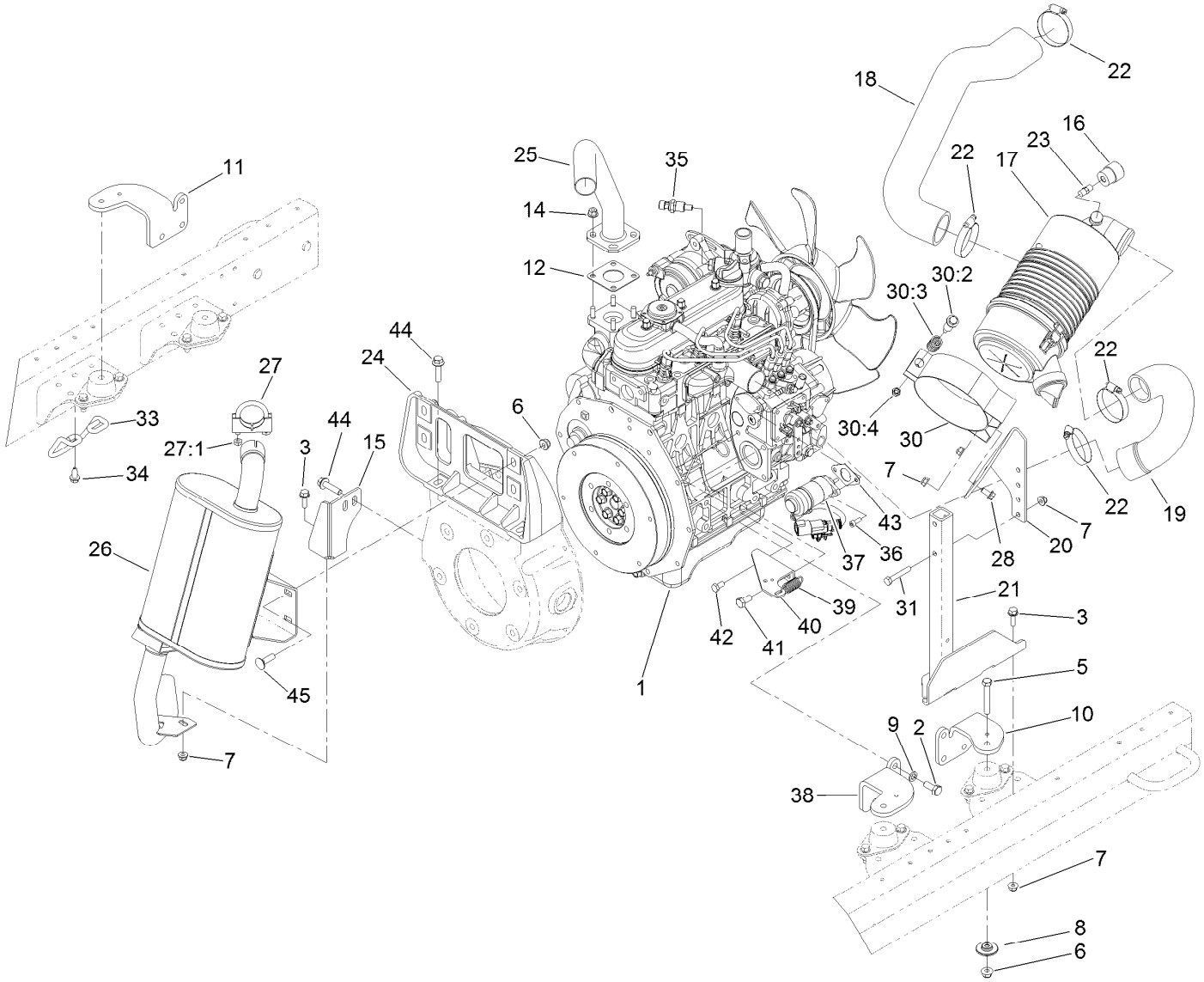

Engine, Air Cleaner and Muffler Assembly (continued)

Ref.	Part Number	Qty.	Description
1	138-6909	1	Engine-Kubota, D1105
2	43-0090	12	Screw-HH
3	3234-29	4	Screw-HHF
5	323-14	4	Screw-HH
6	104-8301	8	Nut-HF, NI
7	104-8300	8	Nut-HF, NI
8	138-6462	4	Support-Isolator
9	48-9590	12	Washer-Lock
10	115-8066-0P	2	Mount-Engine
11	115-8063-0P	1	Mount-Engine RH
12	99-8343	1	Gasket-Muffler
14	104-2612	4	Nut-HF
15	127-2428-0P	1	Tab-Tailpipe
16	93-9164	1	Indicator-Mini
17	106-5277	1	Air Cleaner ASM
18	127-2696	1	Hose-Formed
19	117-5164	1	Hose-Formed
20	127-2695-0P	1	Bracket-Air Cleaner
21	121-5610-0P	1	Stand W.A. Air Cleaner (Welded)
22	2412-130	4	Clamp-Hose
23	94-1416	1	Adapter-Indicator
24	127-2550	1	Bracket-Muffler
25	127-2698	1	Header-Exhaust
26	127-2503	1	Muffler-Exhaust
27	2112-9	1	Clamp
27:1	32128-20	2	Nut-HF
28	3234-14	2	Screw-HHF
30	100-4825	1	Band-Mounting, Air Cleaner
30:2	94-3653	1	Bolt
30:3	94-3654	1	Spring
30:4	33024-00	1	Nut-Lock, NI
31	322-10	2	Screw-HH
33	127-2612	1	Guard-Pipe, Tail
34	32104-32	2	Screw-HWH
35	119-4478	1	Sender-Temperature
36	105-2409	2	Screw-HSH
37	125-1562	1	Actuator-Fuel
38	115-8068-0P	1	Mount-Engine, LH
39	107-1045	1	Spring-Extension
40	125-1472-0P	1	Bracket-Spring, Throttle
41	63-7790	1	Screw-Cap
42	33114-016	1	Screw-HH
43	127-2507	1	Gasket-Actuator, Fuel
44	114-4681	6	Screw-HHF
45	3231-25	4	Bolt-CARR

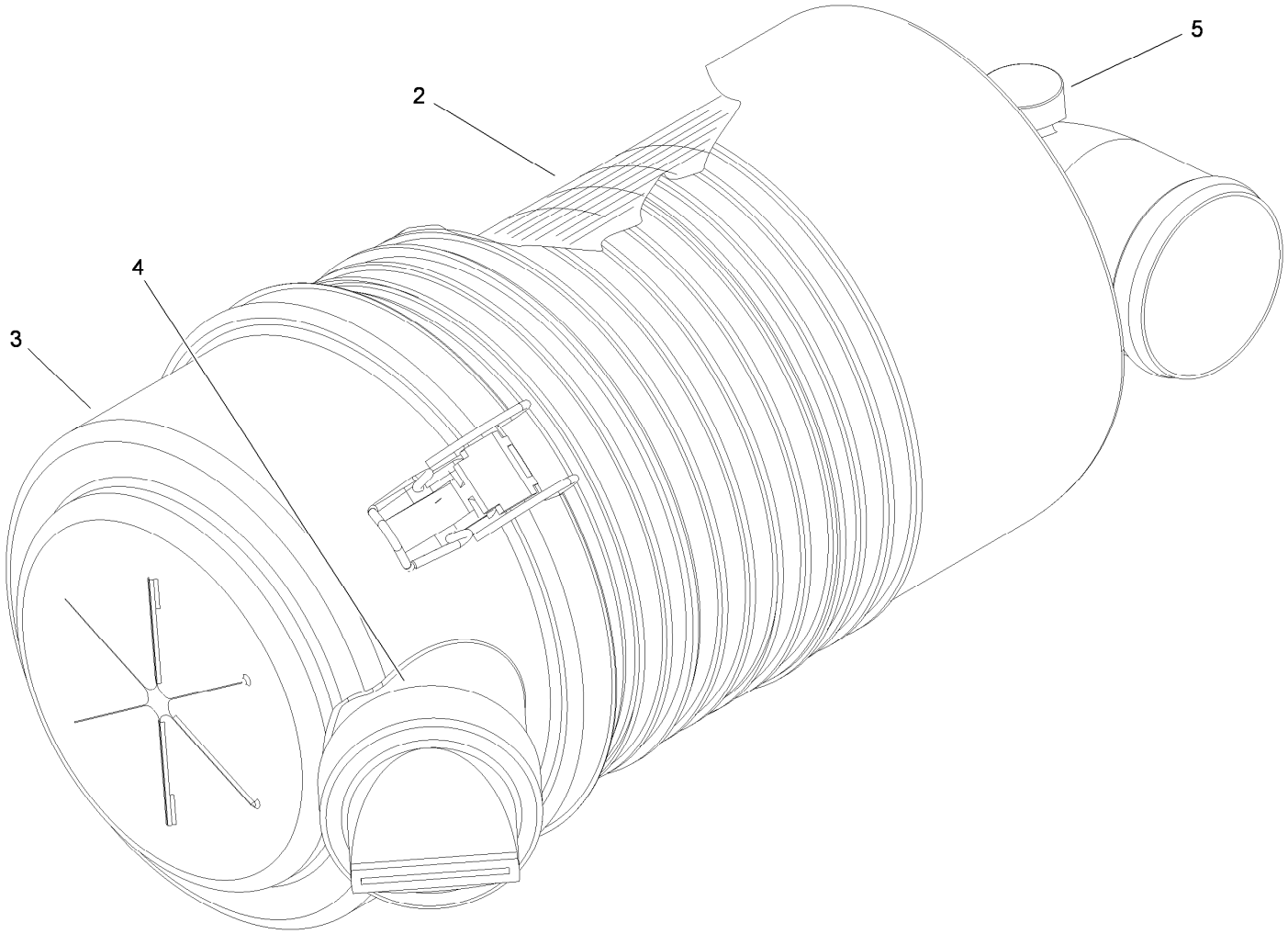

Air Cleaner Assembly No. 106-5277

Ref.	*Part Number*	*Qty.*	*Description*
2	108-3810	1	Filter-Air
3	98-9771	1	Cover ASM
4	87-9400	1	Valve-Vacuator
5	285-17	1	Plug-Pipe

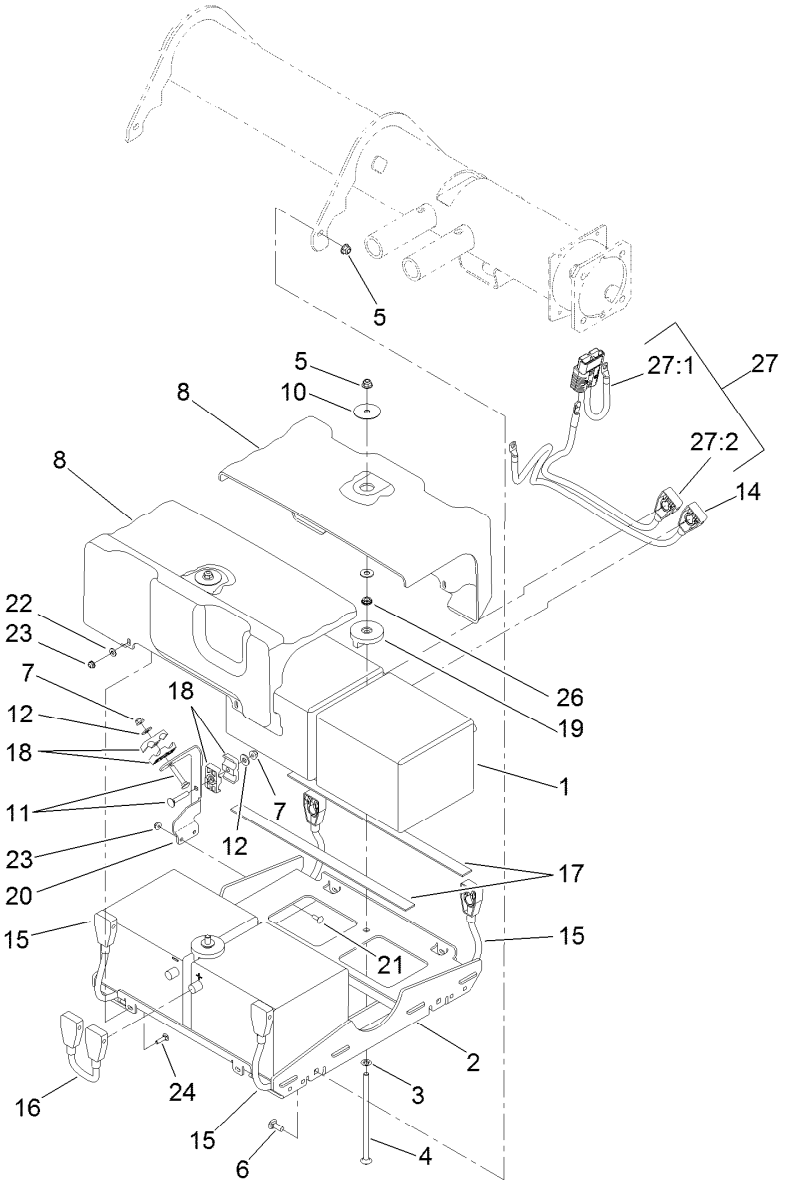

48 Volt Battery Assembly

Ref.	Part Number	Qty.	Description
1	136-3726	4	Battery-12V Agm 35-650
2	136-3708-01	1	Tray ASM [red]
3	107-3154	2	Nut-Push
4	120-4743	2	Screw-CARR
5	104-8301	6	Nut-HF, NI
6	3231-2	4	Bolt-CARR
7	104-8300	2	Nut-HF, NI
8	136-3709	2	Cover-Battery
10	120-2229	2	Washer
11	3230-5	2	Bolt-CARR
12	3256-3	2	Washer-Flat
14	122-0268	1	Negative Battery Cable ASM
15	122-0133	2	Positive Battery Cable ASM

Ref.	Part Number	Qty.	Description
16	122-0134	1	Jumper-Cable-Battery (Positive)
17	127-2306	4	Strip-Foam
18	56-7971	4	Clamp-Tube
19	127-2393	2	Hold Down-Battery
20	127-2517-01	1	Bracket-Cable
21	3229-1	2	Screw-CARR
22	3256-78	4	Washer-Flat
23	104-7201	6	Nut-HF, NI
24	3229-2	4	Screw-CARR
26	3217-7	2	Nut-Hex
27	122-0449	1	Cable-Battery
27:1	122-0267	1	Positive Battery Cable ASM
27:2	122-0319	1	Positive Battery Cable ASM

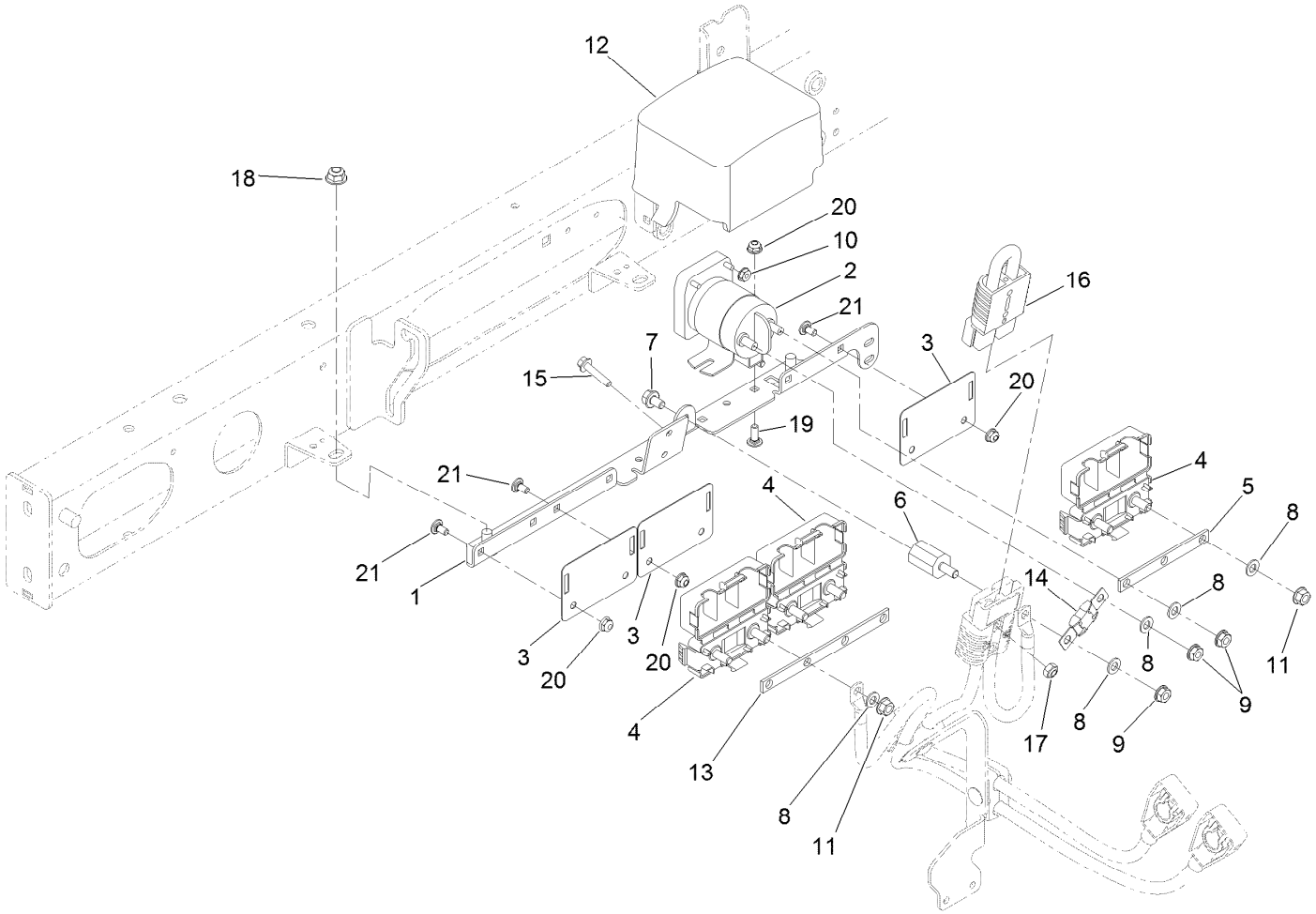

48 Volt Contactor Assembly

Ref.	Part Number	Qty.	Description
1	127-2643	1	Bracket
2	104-7136	1	Contactor-Trombetta
3	127-2325	3	Bracket-Fuse
4	114-3318	3	Holder-Fuse, Mega
5	127-2319	1	Strap-Jumper
6	107-0286	1	Isolator
7	100-1719	1	Screw-Flange
8	107-0394	9	Washer-Flat
9	107-0380	3	Nut-HHF
10	32149-8	2	Nut-Keps
11	127-2371	6	Nut-HF

Ref.	Part Number	Qty.	Description
12	127-2327	1	Cover-Electrical
13	127-2372	1	Strap-Jumper
14	127-2305	1	Fuse-250 Amp
15	127-8639	2	Screw-HHF
16	122-0136	1	Cable-Battery, Positive Jumper ASM
17	3296-16	2	Nut-Lock, NI
18	104-8301	2	Nut-HF, NI
19	1-807512	2	Bolt-CARR
20	104-7201	8	Nut-HF, NI
21	3229-10	6	Screw-CARR

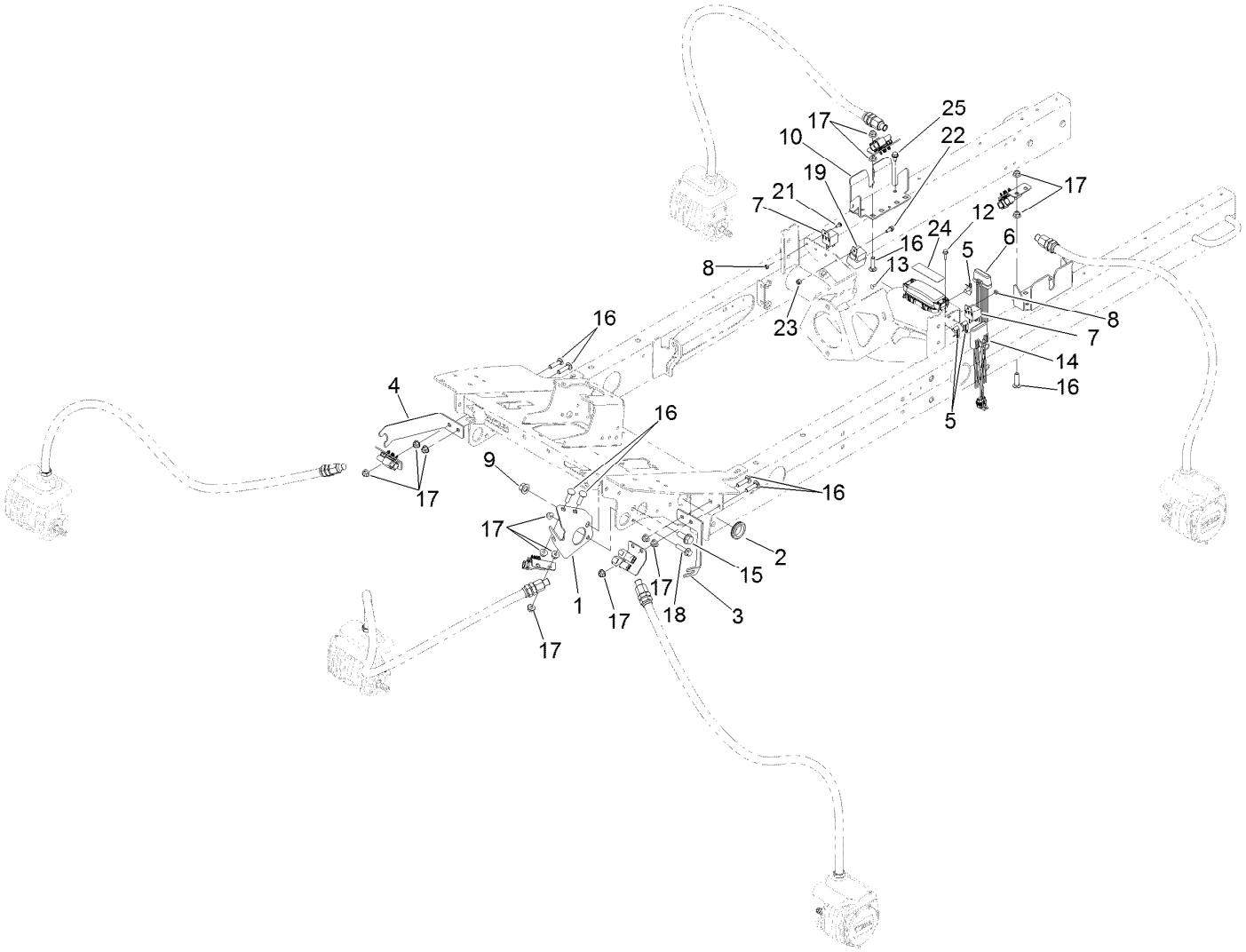

Reel Motor Plumbing Assembly

Ref.	Part Number	Qty.	Description
1	125-1460-01	1	Bracket-Bulkhead, Center
2	240-3	2	Grommet-Rubber
3	127-2314-01	1	Bracket-Bulkhead
4	127-2317-01	1	Bracket-Bulkhead
5	32180-011	3	Clip-Connector
6	112-9630	1	Module-Reel, I.D.
7	99-7435	3	Relay
8	3296-2	3	Nut-Lock, NI
9	99-5107	1	Nut-Lock
10	125-1458-03	2	Bracket-Bulkhead, Rear
12	33103-020	2	Screw-HHF
13	104-1450	1	Bolt-CARR

Ref.	Part Number	Qty.	Description
14	119-4330	1	Isolated Can Module ASM
15	3234-38	1	Screw-HHF
16	127-2351	10	Screw-CARR
17	104-8301	16	Nut-HF, NI
18	114-4681	1	Screw-HHF
19	99-7430	1	Relay-Mini
21	3290-321	2	Screw-HWH
22	3234-33	1	Screw-HHF
23	3296-42	1	Nut-Lock, NI
24	127-2470	1	Decal-Fuses, Cu
25	32104-32	4	Screw-HWH

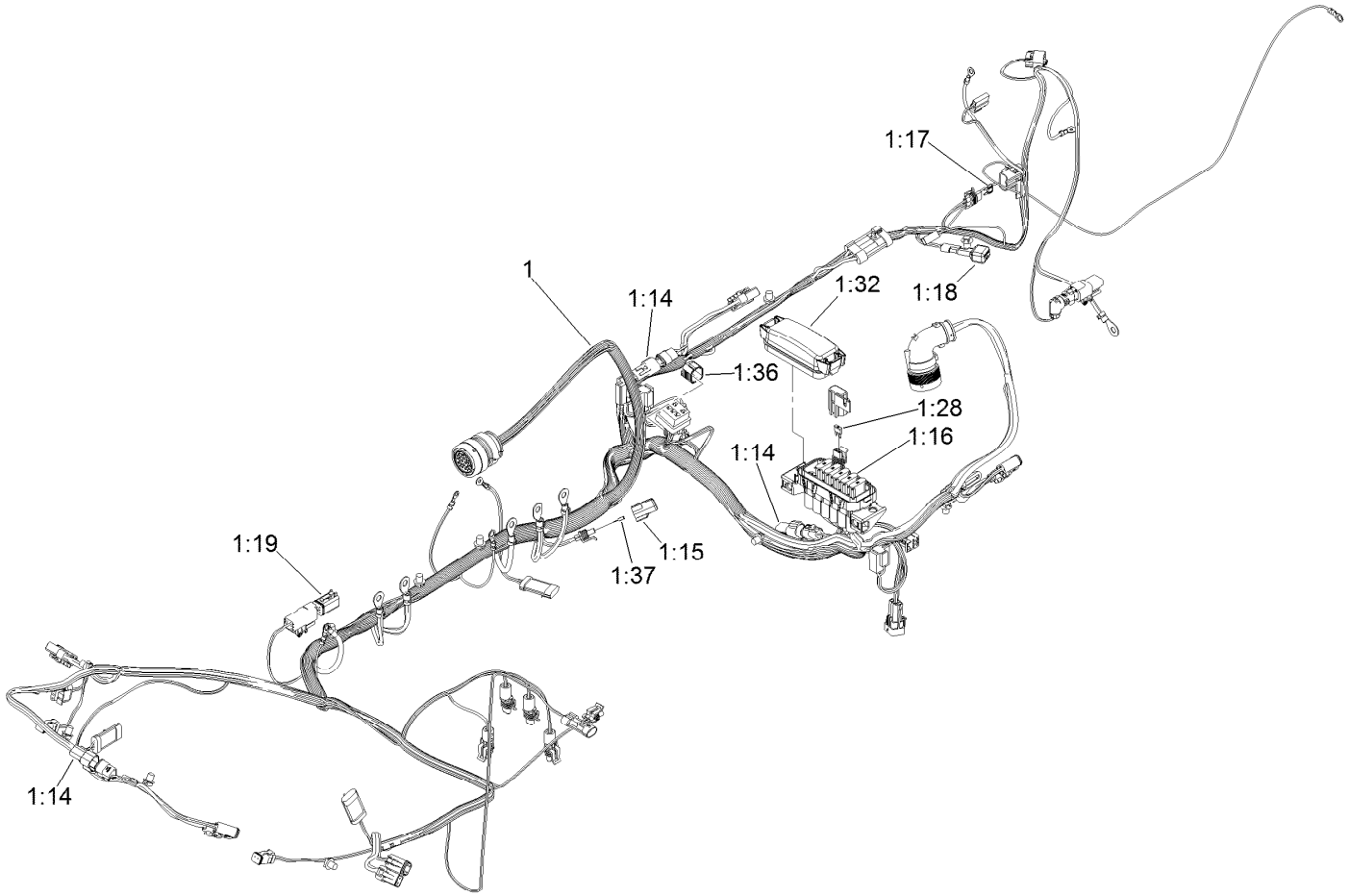

Wire Harness Assembly

Ref.	*Part Number*	*Qty.*	*Description*
1	122-1728	1	Harness-Wire, Rm5010-H Main
1:14	32180-043	3	Resistor-120 Ohm
1:15	32180-101	3	Cover-Fuse, Single
1:16	122-0255	5	Fuse-Maxi, 35 Amp-58V
1:17	121-8861	1	Fuse-Mini Blade, 2 Amp
1:18	100-4918	1	Diode
1:19	119-7781	1	Diode-Sealed
1:28	122-0409	1	Fuse-Mini Blade, 10 Amp
1:32	32180-146	1	Cover-Fuse
1:36	32180-156	1	Cap-Plug, 6 Way
1:37	121-8866	1	Fuse-Mini Blade, 10 Amp

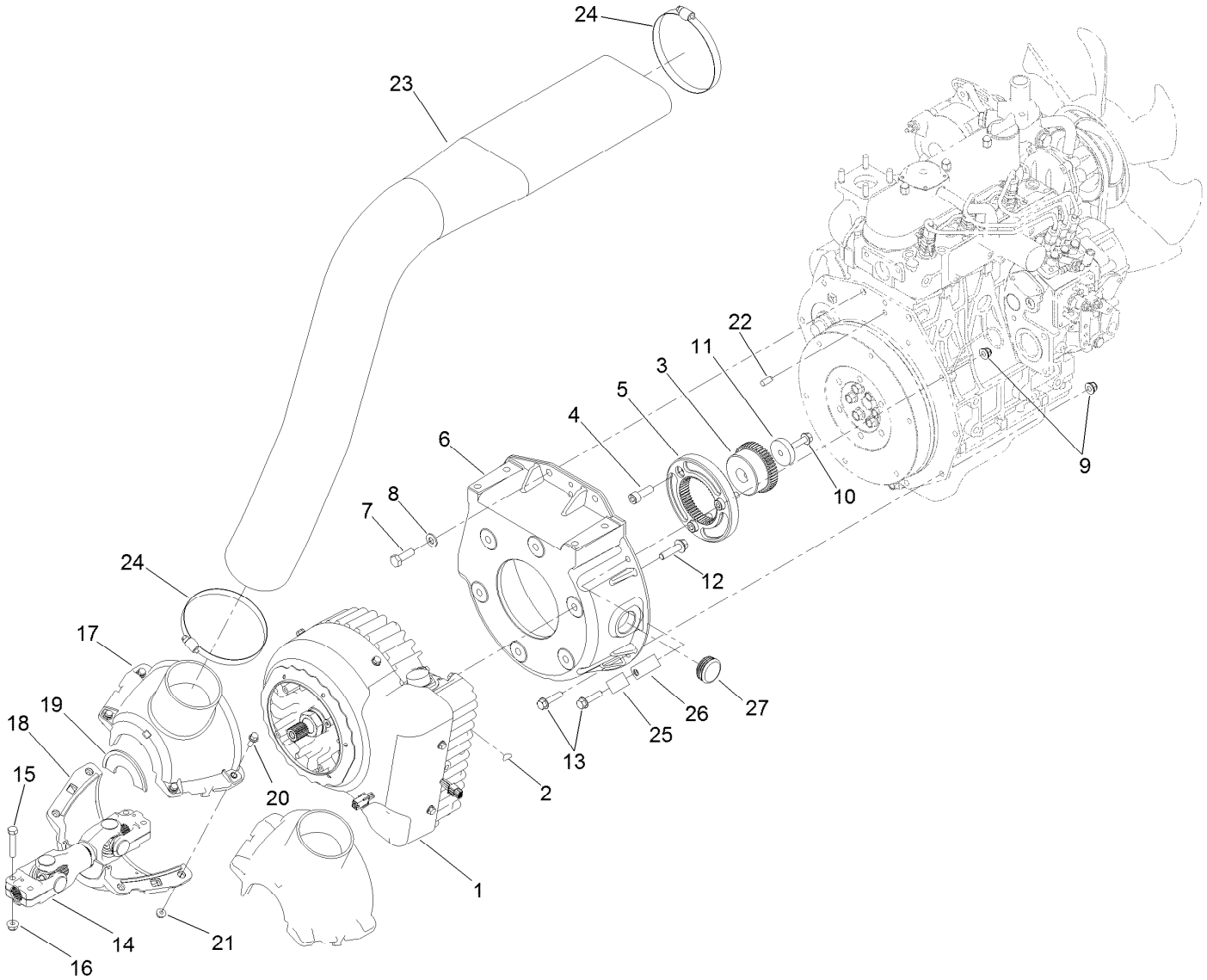

Generator Assembly

Ref.	Part Number	Qty.	Description
1	127-2655	1	Generator/Controller ASM
2	127-2318	1	Key-Woodruff
3	127-2635	1	Hub-Coupler
4	108-1420	3	Screw-HSH
5	125-1179	1	Flange-Coupler
6	127-2380	1	Bellhousing
7	95-8812	2	Screw-HH
8	3256-80	2	Washer-Plain
9	104-3082	2	Nut-Lock, HHF
10	AU100874	1	Screw-HHF
11	127-2374	1	Collar
12	114-4681	6	Screw-HHF
13	33104-035	7	Screw-HHF
14	125-1191	1	Driveshaft ASM

Ref.	Part Number	Qty.	Description
15	322-9	4	Screw-HH
16	104-8300	4	Nut-HF, NI
17	127-2465	1	Shroud ASM
18	127-2442	1	Shroud-Intake, Bottom
19	127-2434	2	Seal-Brush
20	120-9678	4	Screw-HHF
21	104-7201	4	Nut-HF, NI
22	87-1910	2	Pin-Dowel
23	127-2472	1	Hose-Formed
24	2412-46	2	Clamp
25	2412-39	1	Clamp-R
26	2412-41	1	Clamp-R
27	110-9012	1	Caplug

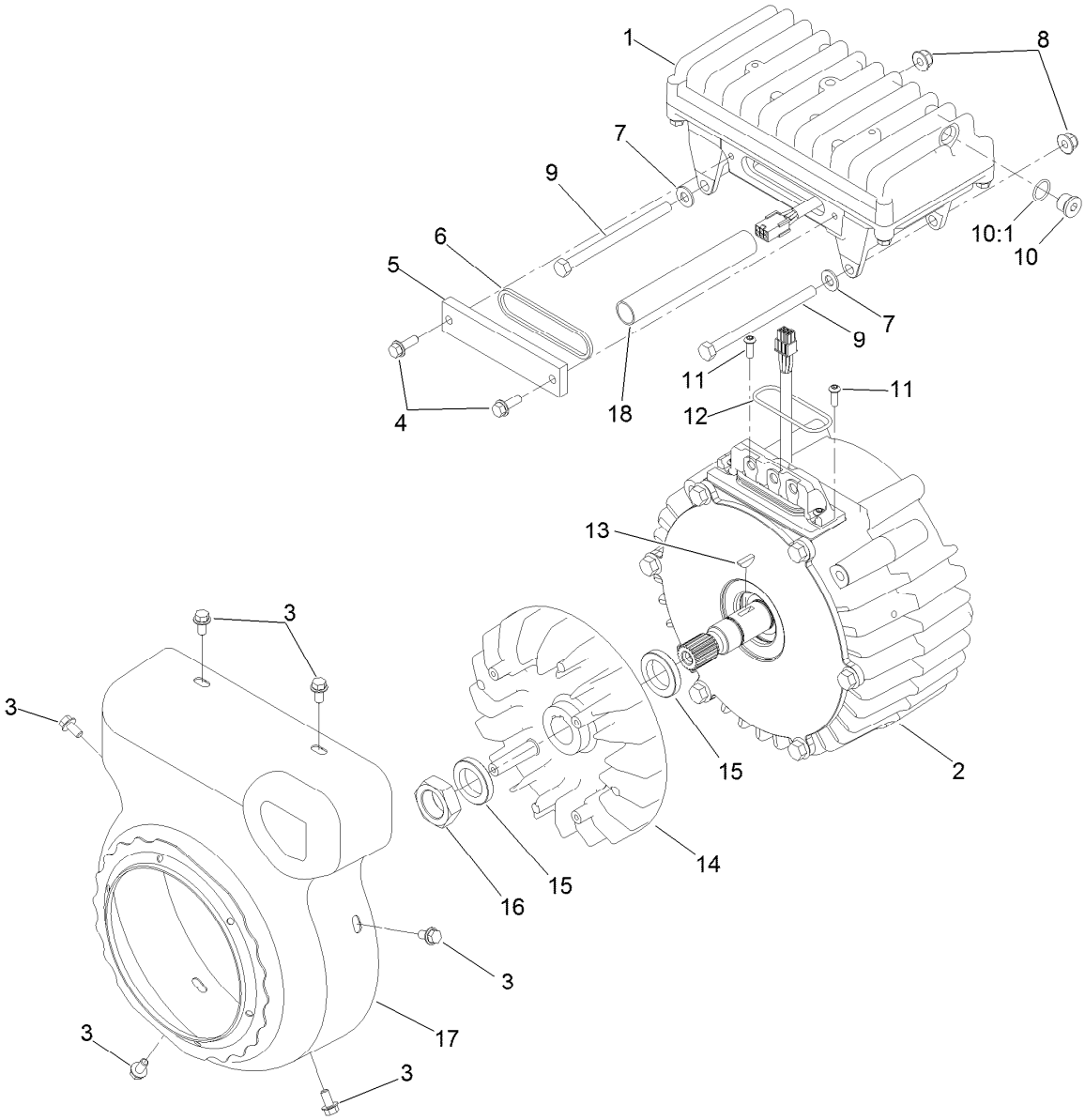

Generator/Controller Assembly No. 127-2655

Ref.	Part Number	Qty.	Description
1	117-8181	1	Controller ASM
2	127-2653	1	Generator Service ASM
3	119-1065	6	Screw-HWH
4	119-1138	2	Screw-HHF
5	120-4511	1	Cover-Access
6	120-4513	1	Gasket-Cover, Access
7	3256-23	2	Washer-Plain
8	104-8300	2	Nut-HF, NI
9	322-38	2	Screw-HH
10	353-989	1	Plug-Hex, Hollow

Ref.	Part Number	Qty.	Description
10:1	237-42	1	O-Ring
11	119-7568	2	Screw-HSBH
12	117-8176	1	O-Ring
13	127-2318	1	Key-Woodruff
14	125-1188	1	Fan-Generator
15	125-1185	2	Spacer
16	125-1187	1	Nut
17	127-2444	1	Cover-Generator
18	127-2747	1	Sleeve-Harness, Expandable

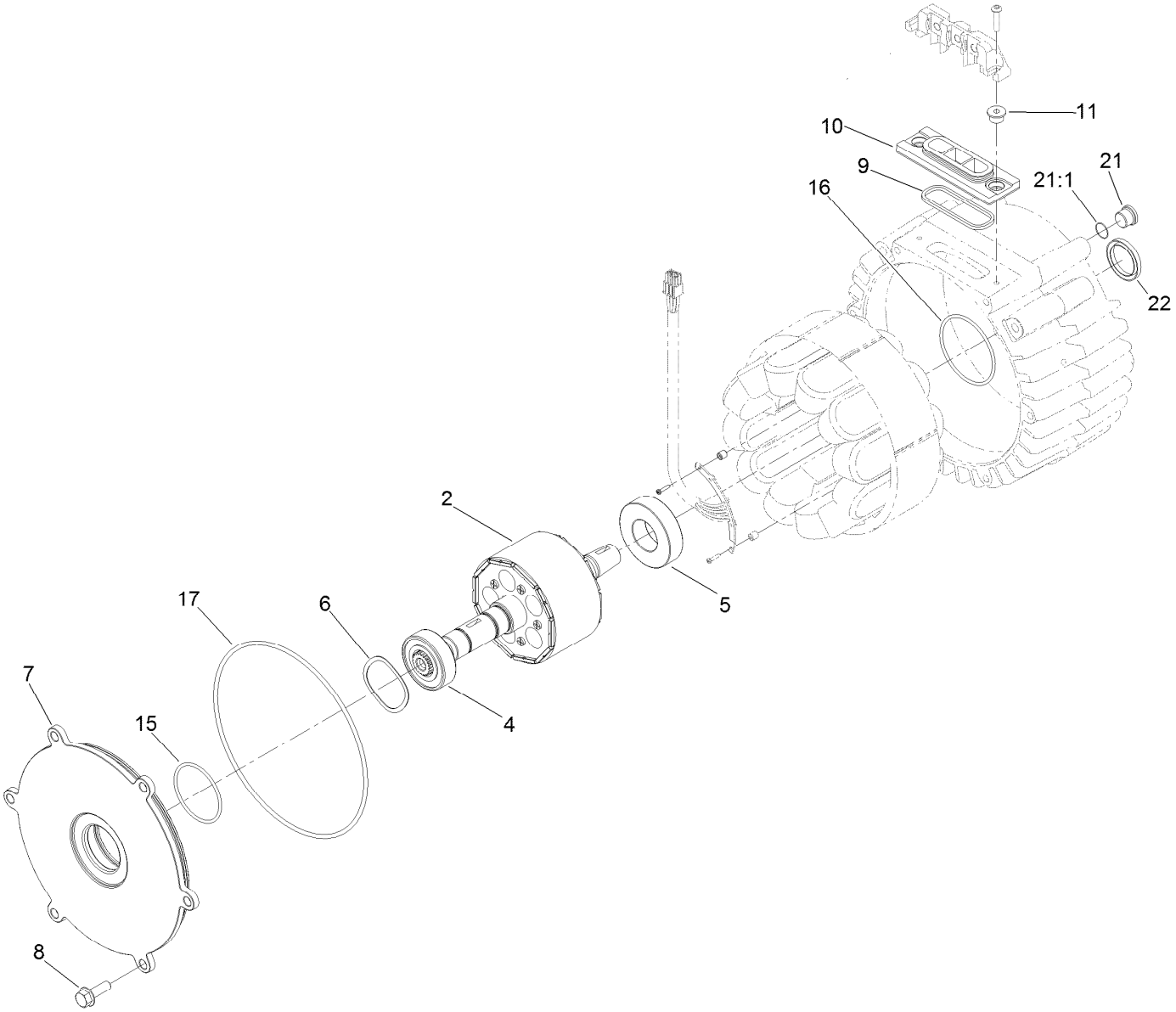

Generator Assembly No. 127-2653

Ref.	Part Number	Qty.	Description
2	127-2651	1	Rotor
4	120-4621	1	Bearing
5	120-4622	1	Bearing
6	117-8148	1	Washer-Wave
7	117-4514	1	Cover-Generator
8	33104-025	6	Screw-HHF
9	120-4518	1	Gasket-Isolator
10	112-5155	1	Isolator-Thermal
11	117-4501	2	Spacer-Shoulder
15	107-3244	1	O-Ring
16	117-8177	1	O-Ring
17	112-5199	1	O-Ring
21	353-989	1	Plug-Hex, Hollow
21:1	237-42	1	O-Ring
22	125-1509	1	Seal

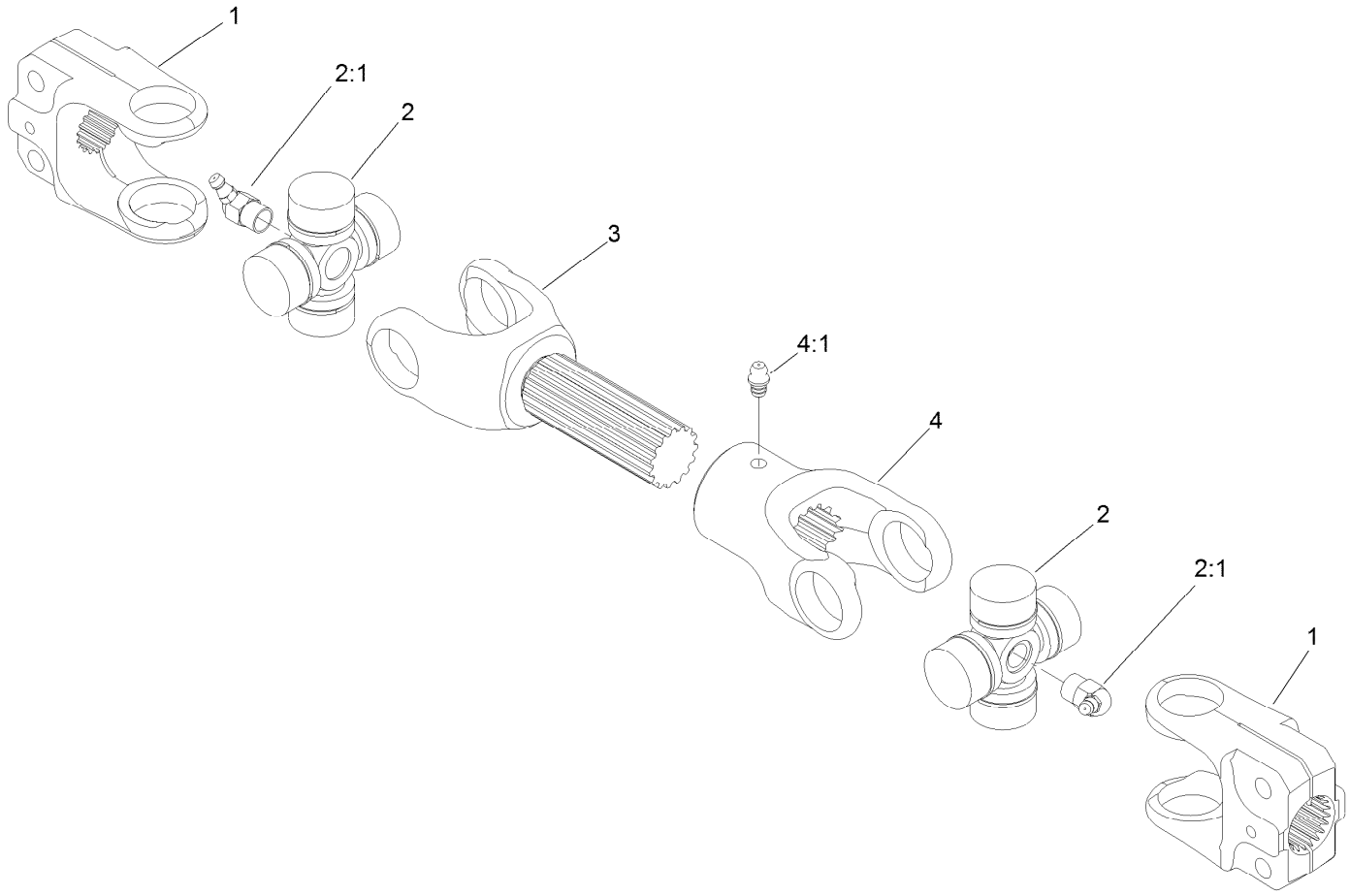

Drive Shaft Assembly No. 125-1191

Ref.	*Part Number*	*Qty.*	*Description*
1	54-9040	2	Yoke-End
2	112-1687	2	Cross And Bearing Kit
2:1	62-3820	1	Fitting-Grease
3	127-2553	1	Yoke-Shaft
4	127-2554	1	Yoke-Telescoping
4:1	302-22	1	Fitting-Grease

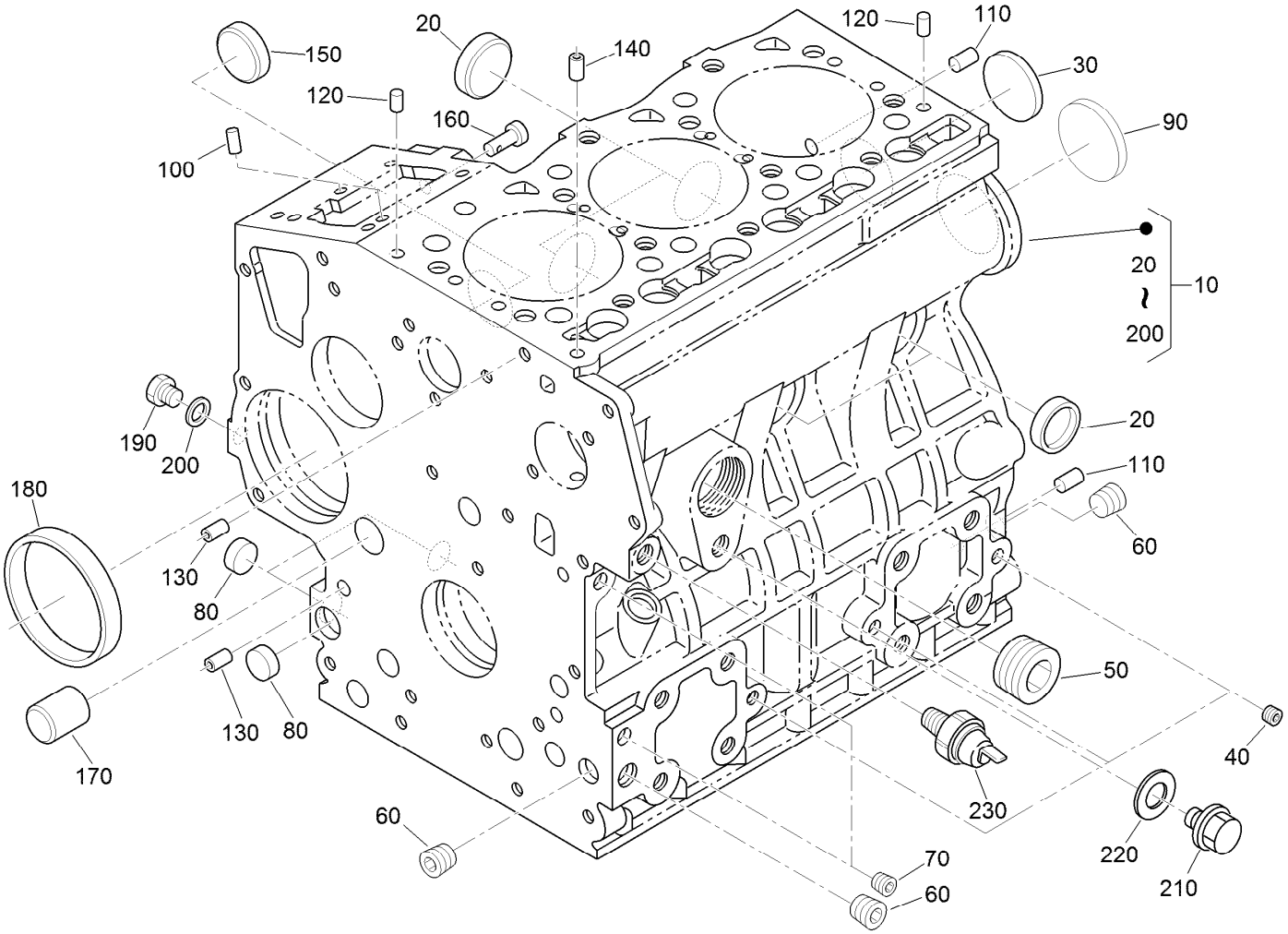

Crankcase Assembly

Ref.	Part Number	Qty.	Description
10	115-3443	1	Crankcase ASM
20	98-9398	4	Cap-Sealing
30	98-7539	1	Cap-Sealing
40	98-9687	3	Plug
50	105-3779	1	Plug
60	98-9597	3	Plug
70	98-7487	2	Plug
80	98-9379	3	Plug-Expansion
90	98-9668	1	Plug-Expansion
100	98-9375	2	Pin-Straight
110	98-9377	2	Pin-Straight
120	98-9376	2	Pin-Straight

Ref.	Part Number	Qty.	Description
130	98-9387	2	Pin-Pipe
140	98-9539	1	Pin-Pipe
150	98-9599	1	Plug
160	98-9630	1	Pin-Spring, Start
170	98-9675	1	Plug
180	98-9656	1	Bushing-Governor, Gear
190	120-2559	1	Plug
200	98-7428	1	Gasket
210	99-3447	1	Plug
220	106-7056	1	Gasket
230	98-9416	1	Switch-Oil

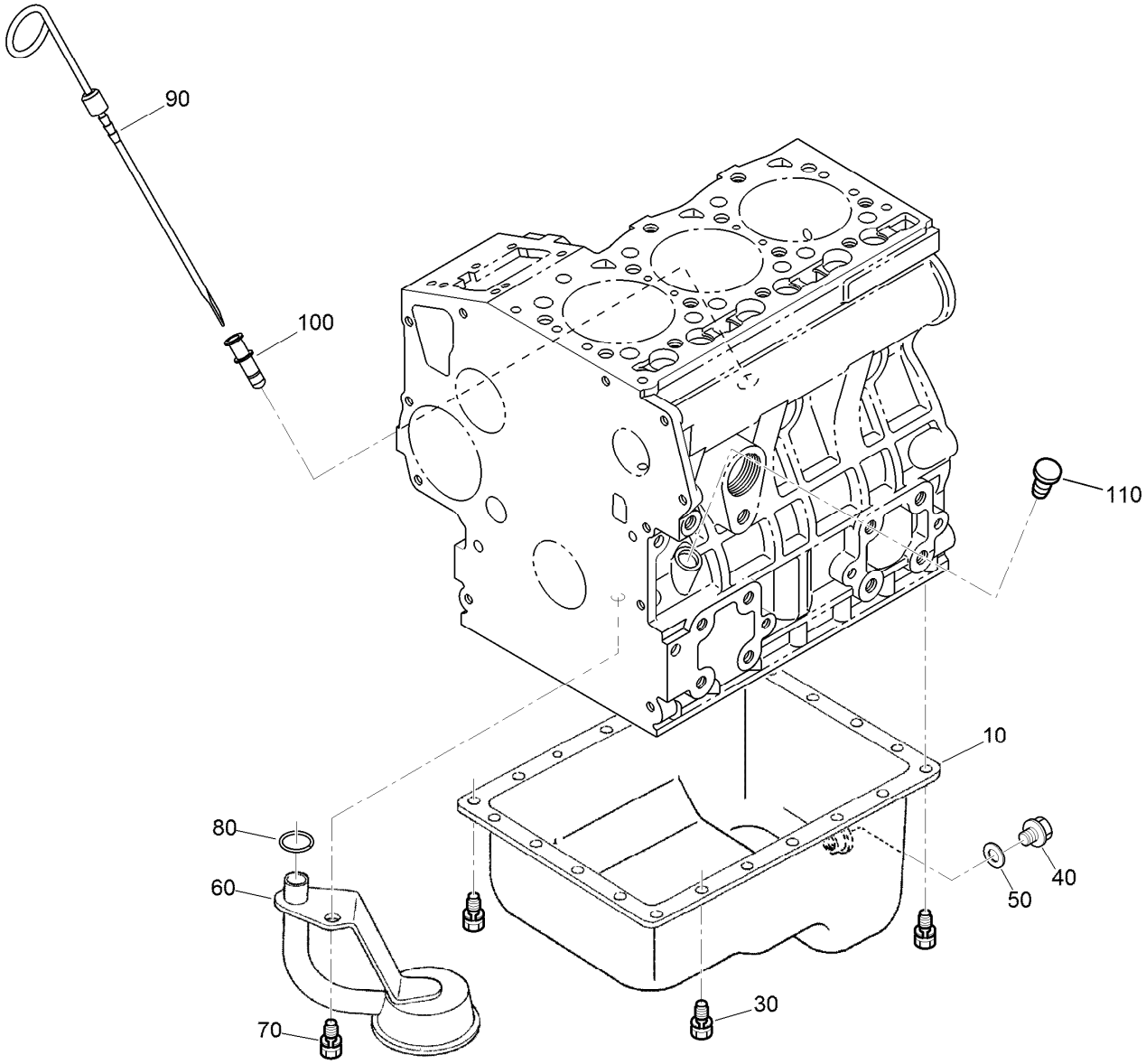

Oil Pan and Dipstick Assembly

Ref.	*Part Number*	*Qty.*	*Description*
10	112-0179	1	Pan-Oil
30	98-9351	22	Bolt
40	114-8151	1	Plug-Drain
50	98-7524	1	Gasket
60	108-1401	1	Base-Filter
70	98-7526	1	Bolt
80	105-3776	1	O-Ring
90	104-9348	1	Gauge-Oil
100	105-4580	1	Guide-Gauge, Oil
110	110-3720	1	Plug-Gauge, Oil

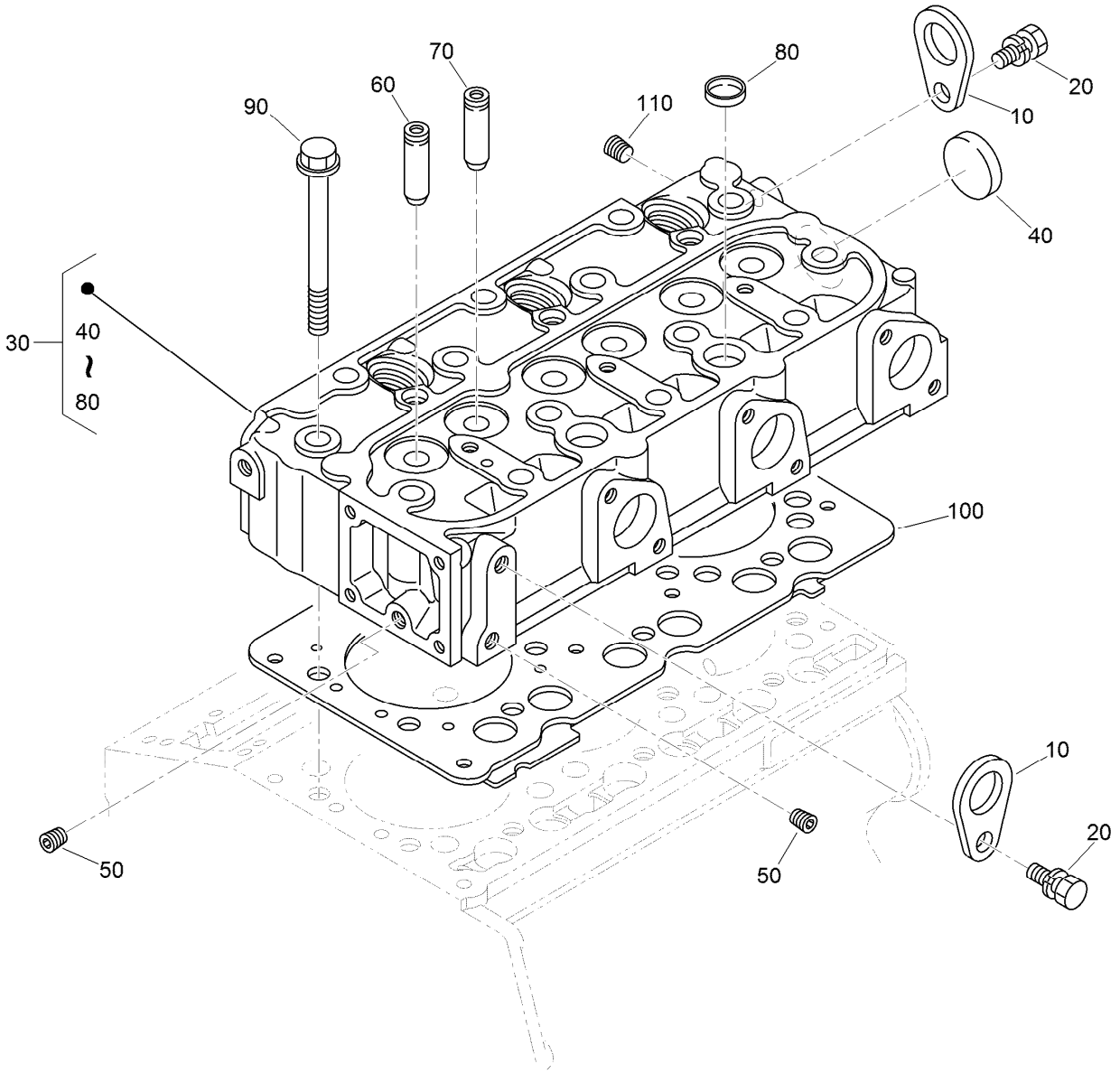

Cylinder Head Assembly

Ref.	*Part Number*	*Qty.*	*Description*
10	98-7531	2	Hook-Engine
20	100-9195	2	Bolt
30	130-1544	1	Cylinder Head ASM
40	105-3705	1	Cap-Sealing
50	98-9687	2	Plug
60	107-9066	3	Guide-Valve, Inlet
70	107-9067	3	Guide-Valve, Exhaust
80	98-9389	2	Cap-Sealing
90	98-9479	14	Bolt-Head, Cylinder
100	108-6573	1	Gasket-Head, Cylinder
110	98-9444	1	Plug

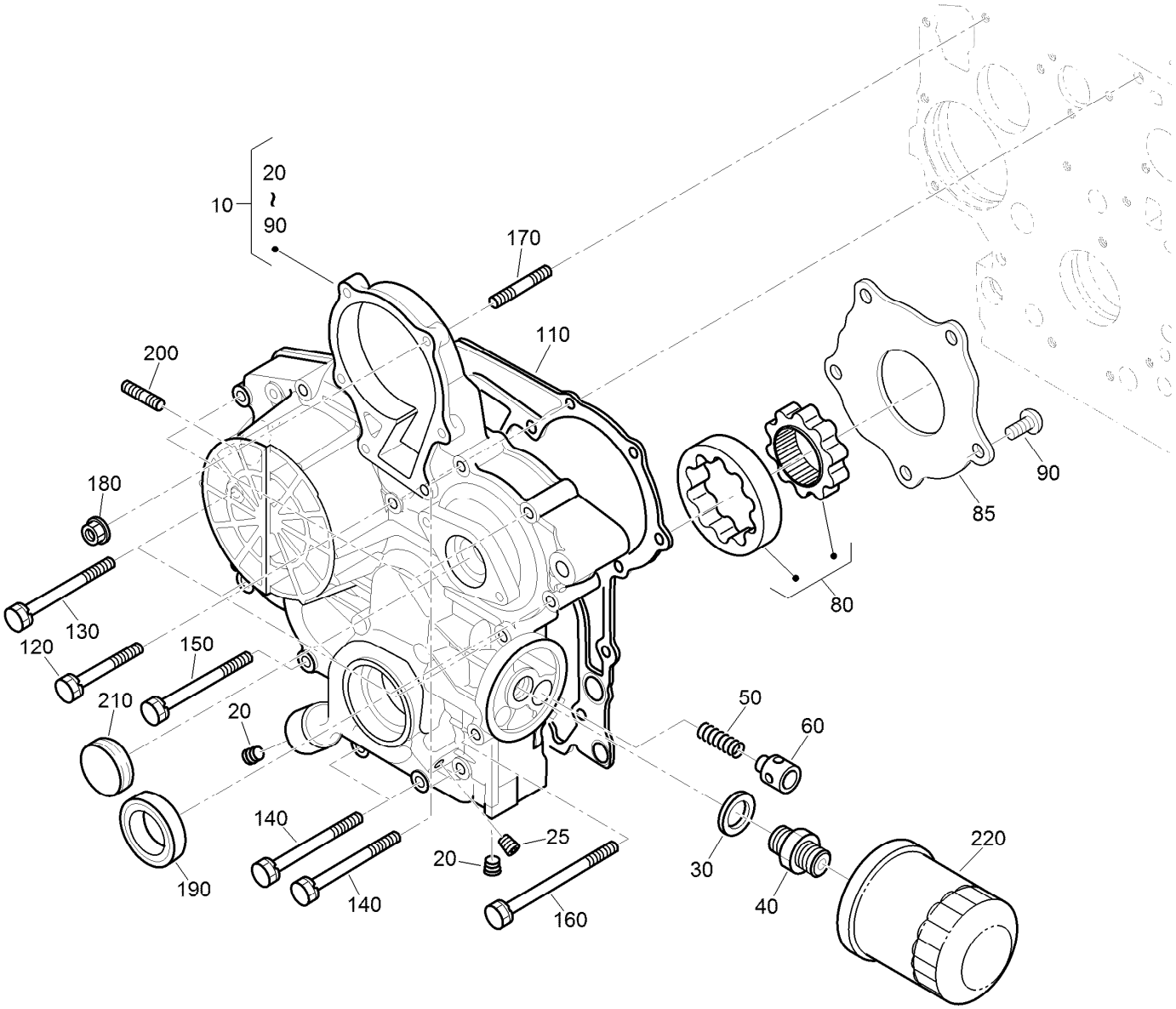

Gear Case and Oil Filter Cartridge Assembly

Ref.	Part Number	Qty.	Description
10	115-4105	1	Gear Case ASM
20	127-0425	2	Plug
25	98-7487	1	Plug
30	98-7562	1	Washer-Plain
40	98-9388	1	Joint-Pipe
50	130-1511	1	Spring
60	130-1510	1	Valve-Relief
80	130-1508	1	Rotor ASM
85	130-1509	1	Cover-Pump, Oil
90	130-1164	5	Screw-Binding
110	98-9633	1	Gasket-Case, Gear

Ref.	Part Number	Qty.	Description
120	100-1765	3	Bolt
130	125-9063	4	Bolt-Sems
140	98-9356	4	Bolt
150	107-9074	1	Bolt
160	98-9586	1	Bolt
170	105-3709	1	Stud
180	100-2203	1	Nut-Flange
190	119-8038	1	Seal-Oil
200	105-3710	2	Stud
210	99-3515	1	Plug-Gearcase
220	127-0511	1	Filter-Oil

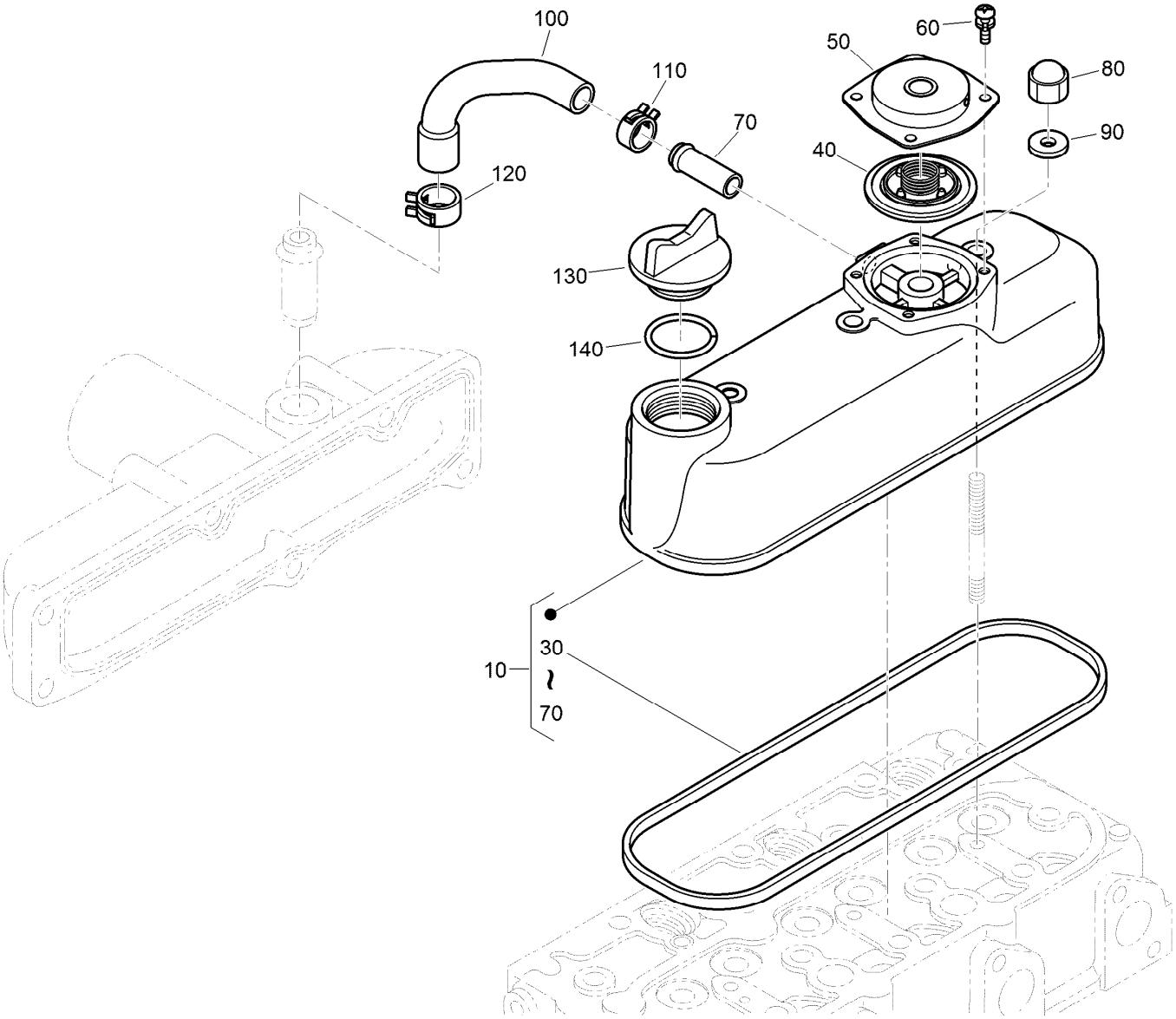

Cylinder Head Cover Assembly

Ref.	Part Number	Qty.	Description
10	130-1372	1	Cylinder Head Cover ASM
30	98-9615	1	Gasket-Cover, Head
40	110-3715	1	Valve-Breather
50	110-3714	1	Cover-Breather
60	98-9364	4	Screw (With Washer)
70	98-7766	1	Pipe-Return, Water
80	98-9455	3	Nut-Cap
90	98-9454	3	Gasket
100	108-2858	1	Tube-Breather
110	108-2859	1	Clamp-Hose
120	108-2860	1	Clamp-Hose
130	107-9075	1	Plug-Filler, Oil
140	99-3446	1	O-Ring

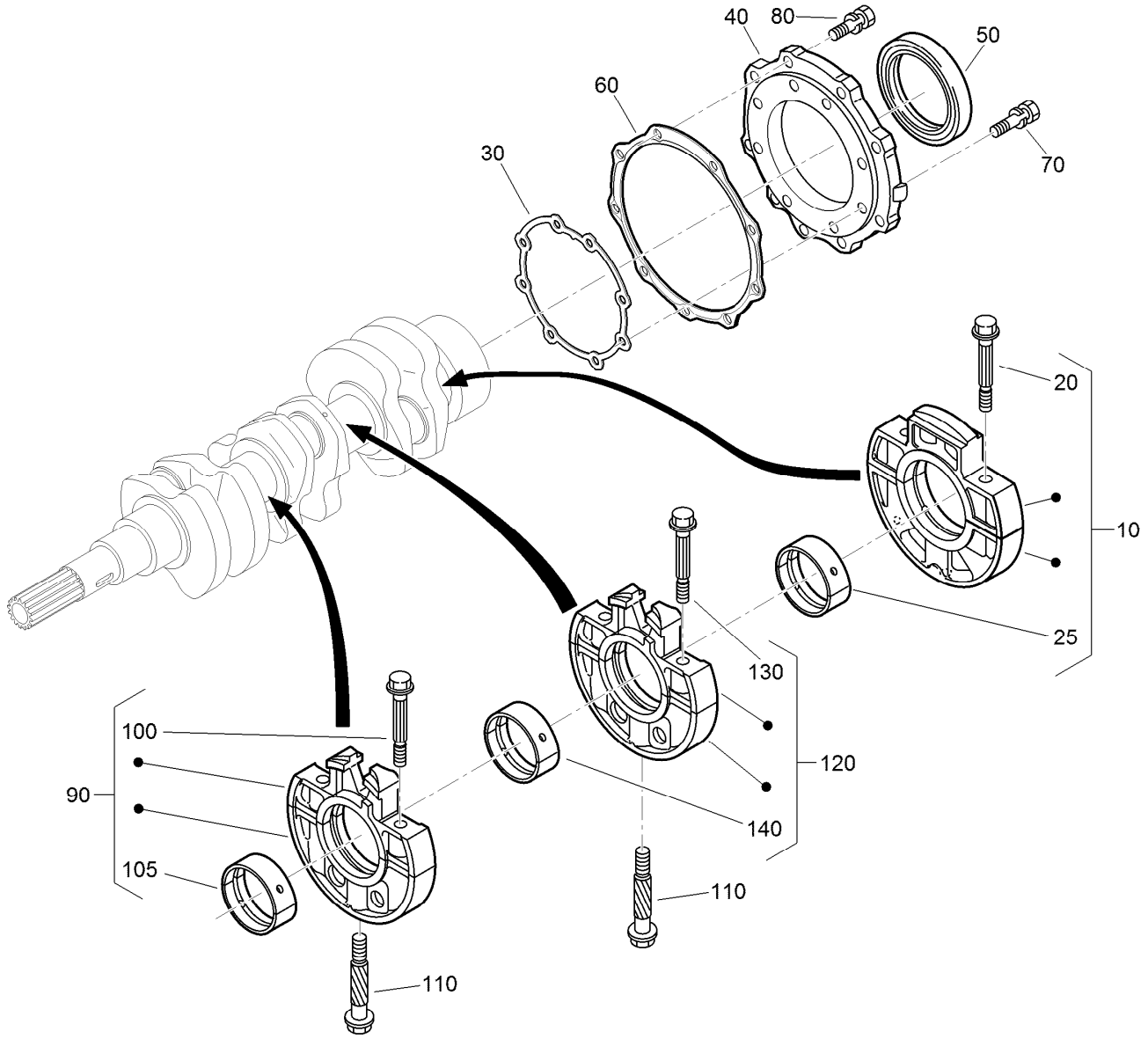

Main Bearing Case Assembly

Ref.	Part Number	Qty.	Description
10	112-7026	1	Wheel Bearing Case ASM
20	98-9484	2	Bolt-Case, Bearing
25	115-4121	1	Metal-Crankshaft (STD)
25	112-7039	1	Metal-Crankshaft (0.2Mm)
25	112-7040	1	Metal-Crankshaft (-0.4Mm)
30	131-6554	1	Gasket-Case, Bearing
40	112-7046	1	Cover-Case, Bearing
50	112-0180	1	Seal-Oil
60	112-7037	1	Gasket-Cover, Case
70	127-0441	8	Bolt
80	127-0442	9	Bolt

Ref.	Part Number	Qty.	Description
90	115-4106	1	Main Bearing Case ASM
100	98-9484	2	Bolt-Case, Bearing
105	98-9524	1	Metal-Crankshaft (STD Set)
105	127-0433	1	Metal-Crankshaft (-0.2MM)
110	98-9531	1	Bearing-Main (0.4MM)
110	98-9485	2	Bolt-Case, Bearing
120	115-4107	1	Main Bearing Case ASM
130	98-9484	2	Bolt-Case, Bearing
140	98-9524	1	Metal-Crankshaft (STD Set)
140	127-0433	1	Metal-Crankshaft (-0.2MM)
140	98-9531	1	Bearing-Main (0.4MM)

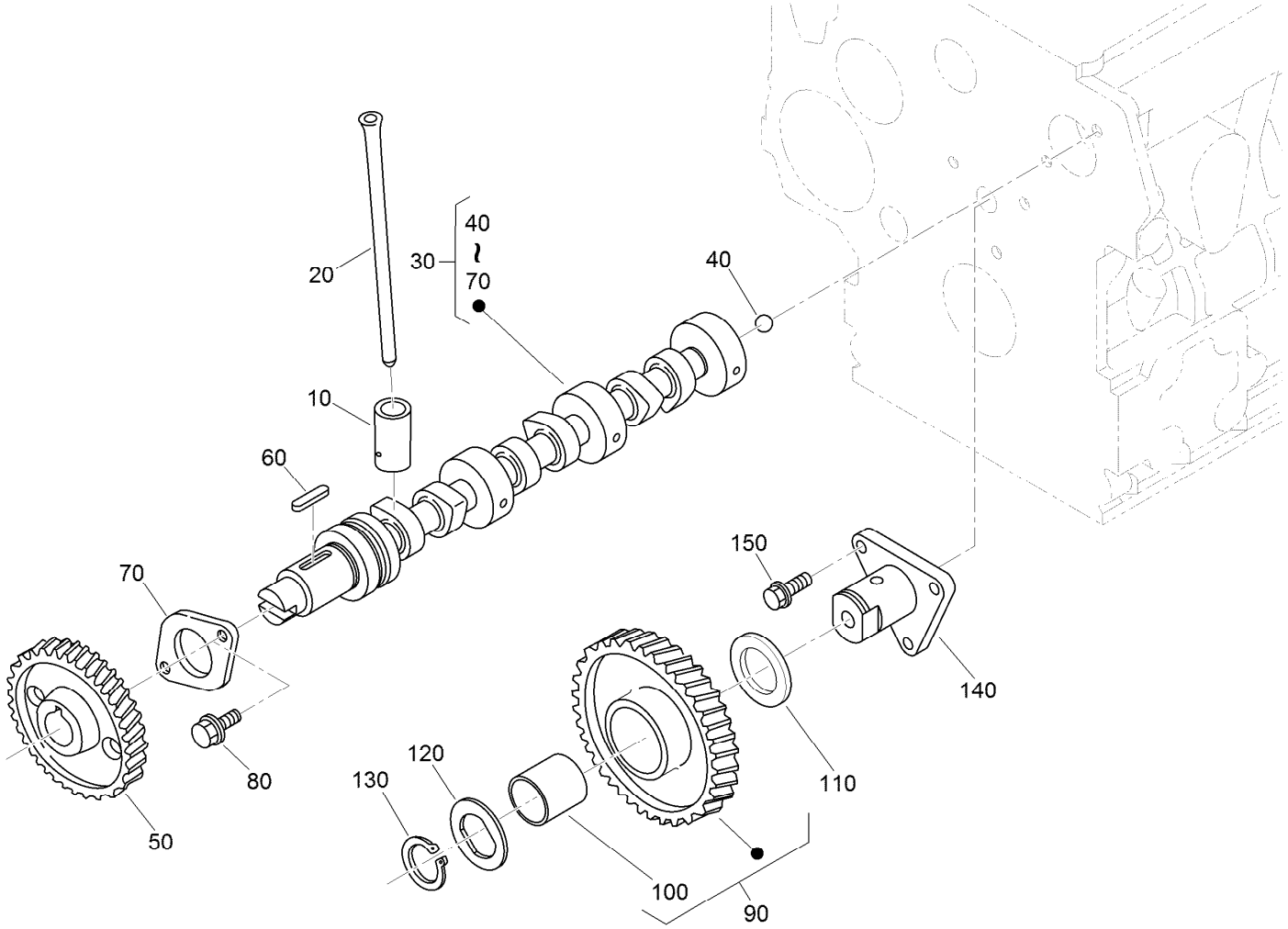

Camshaft and Idle Gear Shaft Assembly

Ref.	Part Number	Qty.	Description
10	112-0185	6	Tappet
20	127-0421	6	Rod-Push
30	130-1545	1	Camshaft ASM
40	110-3729	1	Ball
50	120-3116	1	Camshaft ASM
60	98-9378	1	Key-Feather
70	131-6555	1	Stopper (Camshaft)
80	98-7692	2	Bolt
90	117-7584	1	Idler Gear ASM
100	117-7585	1	Bushing-Gear, Idle
110	98-9535	1	Collar-Gear, Idle
120	98-9536	1	Collar-Gear, Idle
130	98-9534	1	Circlip-Gear, Idle
140	98-9533	1	Shaft-Gear, Idle
150	98-7692	3	Bolt

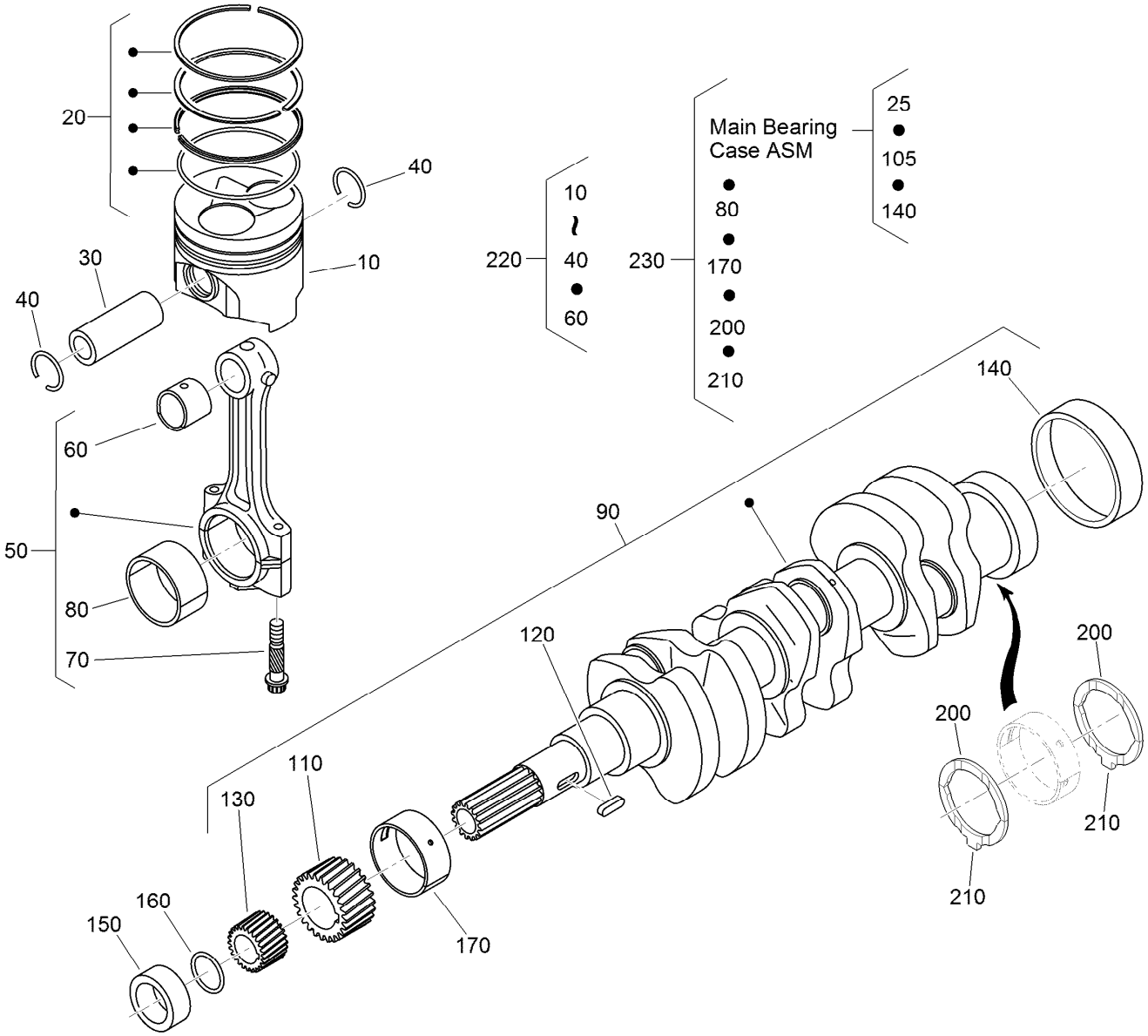

Piston and Crankshaft Assembly

Ref.	Part Number	Qty.	Description
10	130-1546	3	Piston (STD)
10	130-1549	3	Piston (+0.50MM)
20	130-1506	3	Piston Ring ASM (STD)
20	130-1507	3	Piston Ring ASM (+0.50MM)
30	98-9513	3	Pin-Piston
40	98-9514	6	Circlip-Pin, Piston
50	117-7586	3	Connecting Rod ASM
60	115-3014	3	Bushing-Pin, Piston
70	98-9517	6	Bolt-Rod, Connecting
80	98-9553	3	Bearing-Rod (STD)
80	98-9519	3	Bearing-Rod (-0.2MM)
80	117-7588	3	Metal-Crankpin (-0.4MM)
90	130-1375	1	Crankshaft ASM
110	117-7561	1	Gear-Crankshaft
120	98-9666	1	Key
130	127-0445	1	Gear-Drive, Oil Pump
140	98-9522	1	Sleeve-Crankshaft
150	127-0444	1	Collar-Crankshaft

Ref.	Part Number	Qty.	Description
160	105-3783	1	O-Ring
170	112-7005	1	Bearing-Main (STD)
170	98-9528	1	Bearing-Main (-0.2MM)
170	130-1274	1	Metal-Crankshaft (-0.40Mm)
200	98-9413	2	Bearing-Thrust (STD)
200	127-0416	2	Metal-Side (+0.2Mm)
200	127-0417	2	Metal-Side (+0.40Mm)
210	98-9688	2	Bearing-Thrust (STD)
210	127-0437	2	Metal-Side (+0.2MM)
210	127-0438	2	Metal-Side (+0.40MM)
220	130-1547	3	Piston Kit
220	130-1548	3	Piston Kit
230	130-1501	1	Engine Metal Kit (STD)
230	130-1498	1	Engine Metal Kit (-0.20Mm/+0.20Mm)
230	130-1499	1	Engine Metal Kit (-0.40Mm/+0.40Mm)

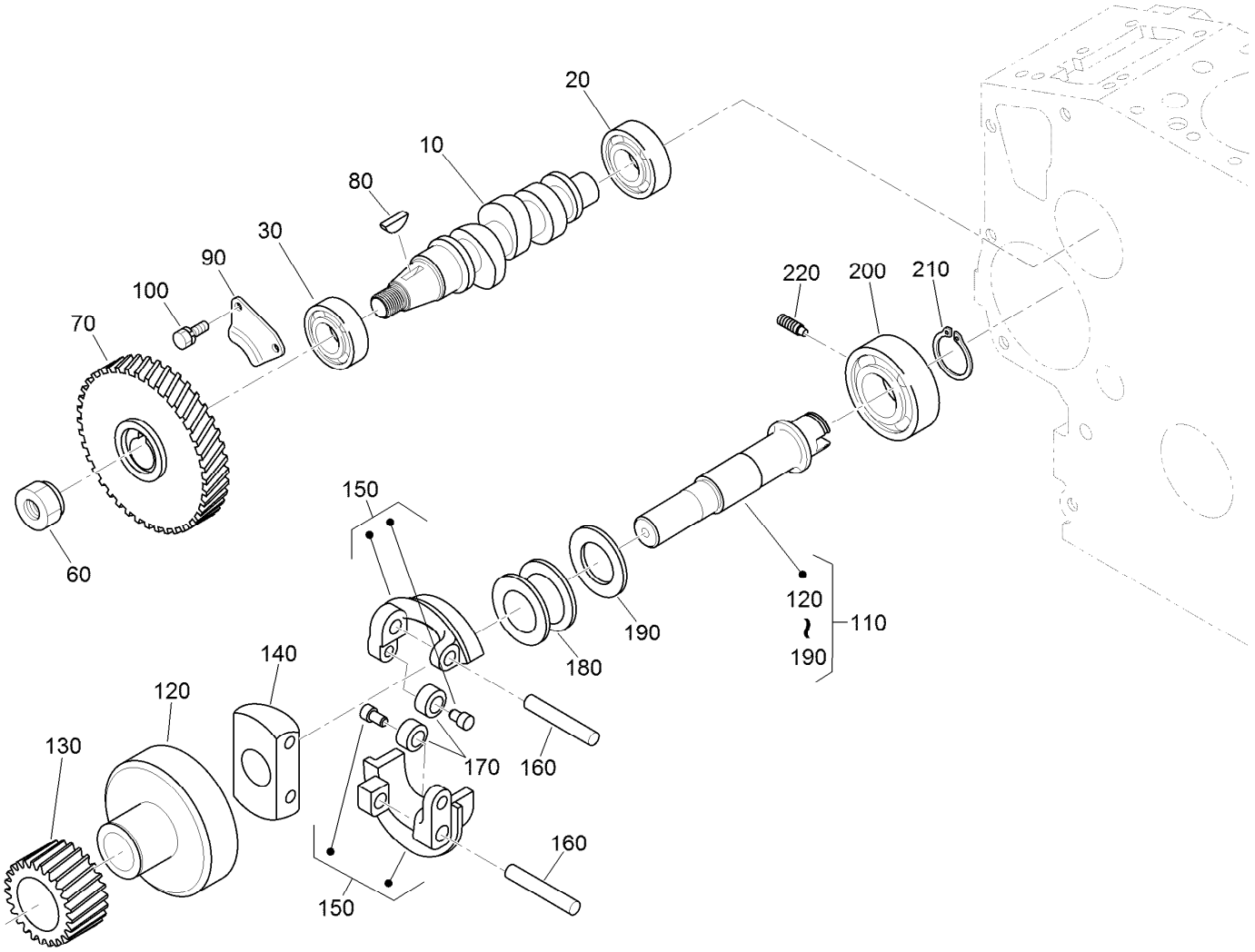

Fuel Camshaft and Governor Shaft Assembly

Ref.	Part Number	Qty.	Description
10	98-9459	1	Camshaft-Fuel
20	107-9077	1	Bearing-Ball
30	107-9078	1	Bearing-Ball
60	130-1512	1	Nut
70	120-2562	1	Gear-Pump, Injection
80	98-9595	1	Key-Woodruff
90	98-9511	1	Stopper-Fuel, Camshaft
100	98-7692	2	Bolt
110	130-1255	1	Governor Shaft ASM
120	98-9562	1	Holder-Gear, Governor

Ref.	Part Number	Qty.	Description
130	98-9673	1	Gear-Governor
140	98-9561	1	Holder-Weight, Governor
150	98-9559	2	Governor Weight ASM
160	98-9560	2	Shaft-Weight, Governor
170	98-9692	2	Roller
180	98-9563	1	Sleeve-Governor
190	98-9564	1	Washer-Thrust
200	107-9079	1	Bearing-Ball
210	98-9657	1	Circlip-Shaft, Governor
220	98-9565	1	Screw-Set

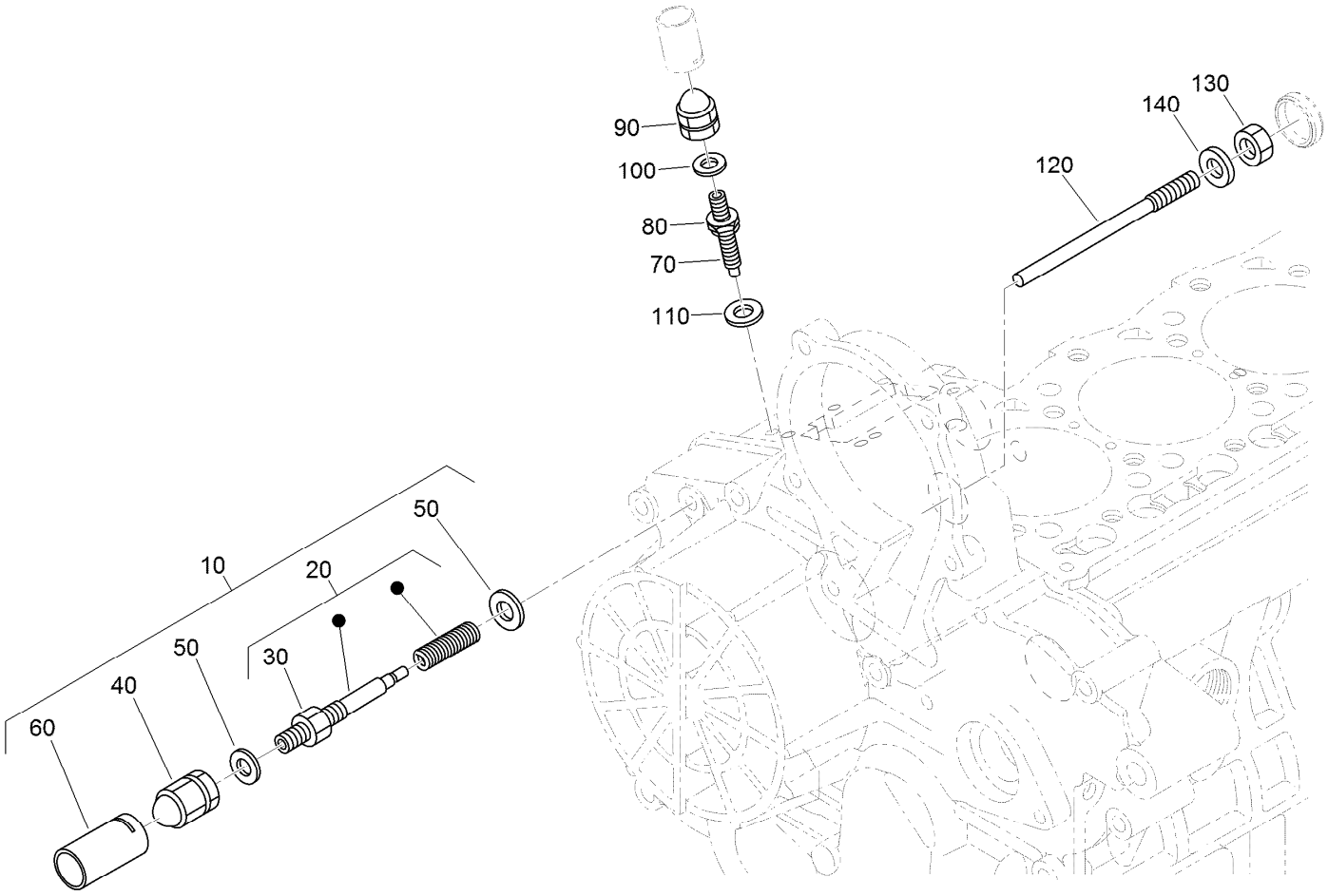

Idle Apparatus Assembly

Ref.	Part Number	Qty.	Description
10	98-9678	1	Idle Apparatus ASM
20	112-7014	1	Adjusting Bolt ASM
30	98-9439	1	Nut
40	112-0181	1	Nut
50	98-7654	2	Gasket
60	98-7656	1	Cap
70	112-7015	1	Bolt-Adjusting
80	100-2175	1	Nut-Lock
90	112-0181	1	Nut
100	98-7654	1	Gasket
110	107-9081	1	Gasket
120	131-6556	1	Bolt
130	98-7572	1	Nut
140	98-7654	1	Gasket

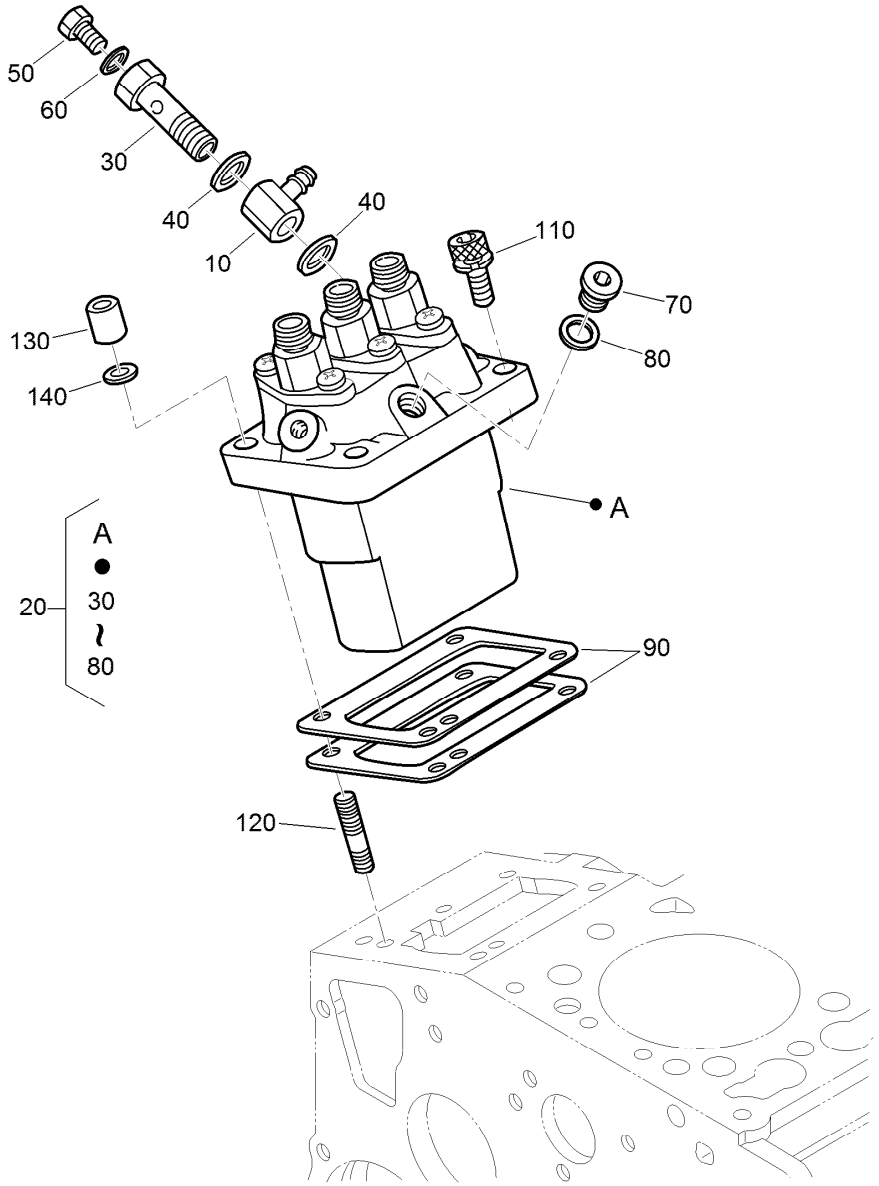

Injection Pump Assembly

Ref.	Part Number	Qty.	Description
10	98-9596	1	Joint-Eye
20	98-9643	1	Injection Pump ASM
30	98-9464	1	Bolt-Joint
40	98-9445	2	Gasket
50	98-9430	1	Screw
60	98-9446	1	Gasket
70	98-9466	1	Plug
80	98-9451	1	Gasket
90	98-9456	1	Shim-Injection (0.20MM)

Ref.	Part Number	Qty.	Description
90	98-9457	1	Shim-Injection (0.25MM)
90	98-9458	1	Shim-Injection (0.30MM)
90	115-3046	1	Shim-Injection (0.35MM)
90	115-3045	1	Shim-Injection (0.175MM)
110	117-7564	2	Bolt-Hex Soc HD
120	98-9438	2	Stud
130	98-9440	2	Nut-Cap
140	98-7699	2	Washer-Spring

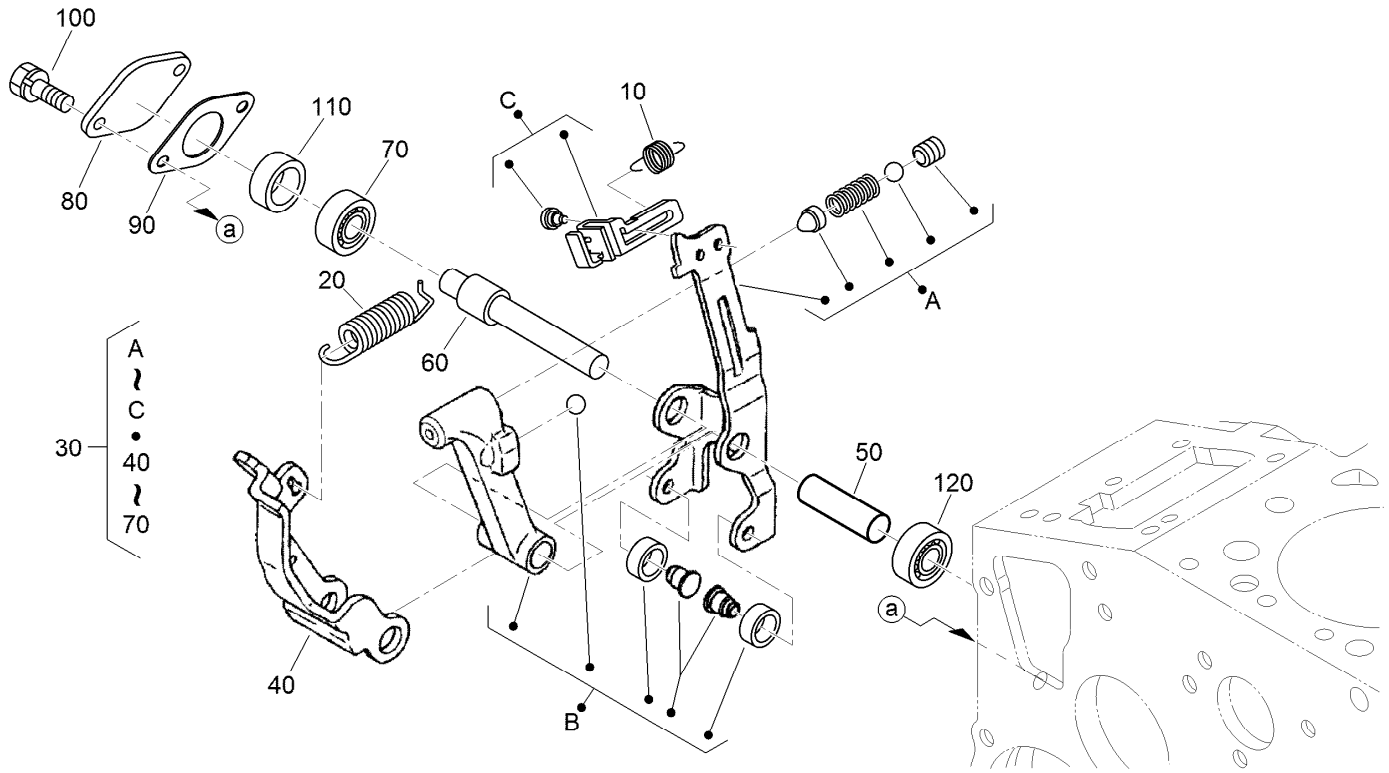

Governor Assembly

Ref.	Part Number	Qty.	Description
10	105-3786	1	Spring-Start
20	98-9681	1	Spring-Governor
30	115-4502	1	Fork Lever ASM
40	107-9084	1	Lever-Fork
50	107-9085	1	Shaft-Lever, Fork
60	107-9086	1	Shaft-Lever, Fork
70	98-9570	1	Bearing-Miniaturize
80	115-4122	1	Cover-Shaft, Fork Lever
90	98-9682	1	Gasket
100	98-9350	2	Bolt
110	98-9567	1	Collar
120	98-9571	1	Bearing-Miniaturize

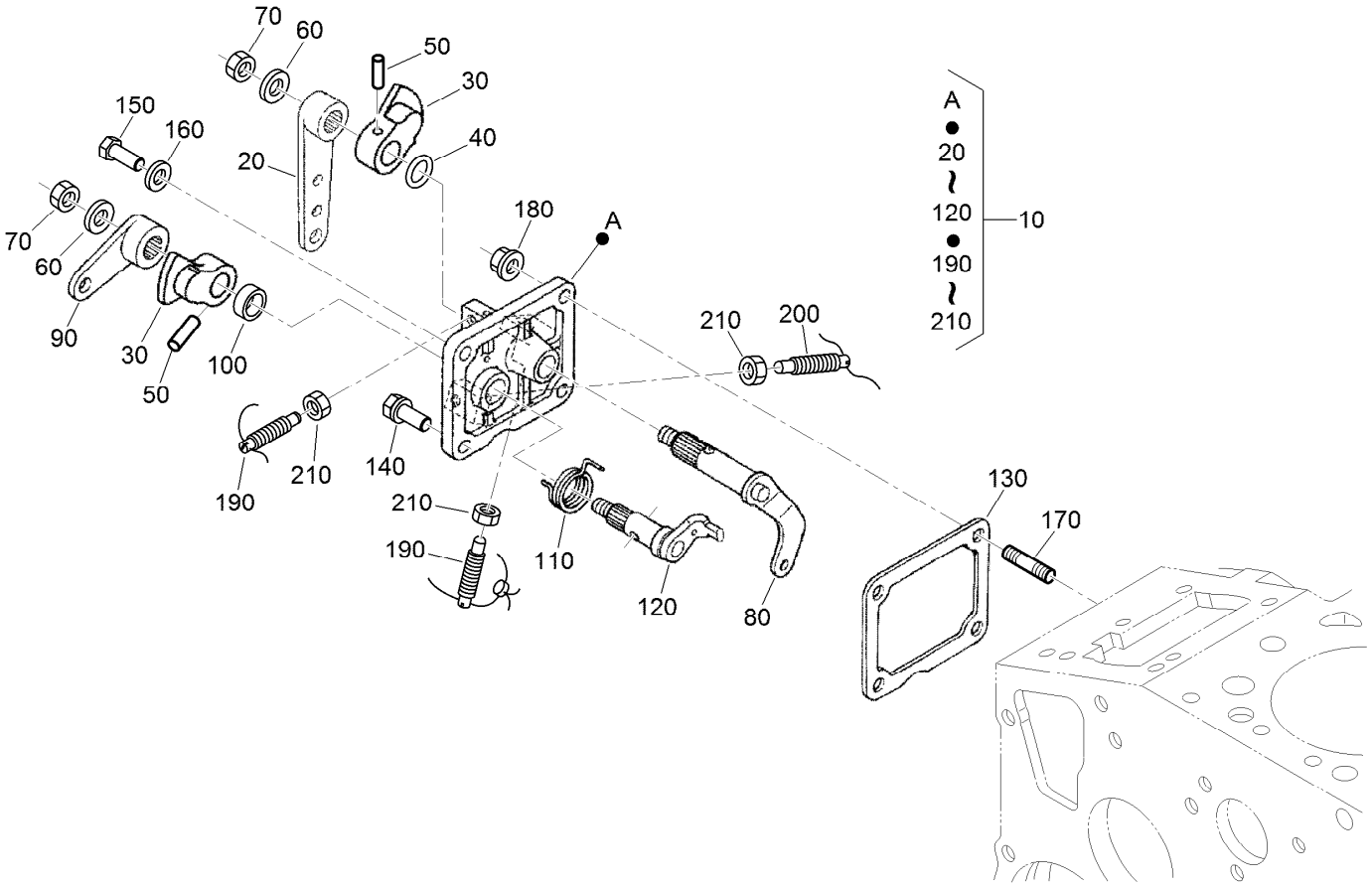

Speed Control Plate Assembly

Ref.	Part Number	Qty.	Description
10	105-3735	1	Control Plate ASM
20	98-9662	1	Lever-Control, Speed
30	98-9572	2	Lever-Control, Speed
40	105-3788	1	O-Ring
50	98-7602	2	Pin-Spring
60	98-9594	2	Washer-Plain
70	98-9589	2	Nut
80	98-9658	1	Governor Lever ASM
90	98-9663	1	Lever-Stop, Engine
100	98-7601	1	Seal-Oil
110	98-9472	1	Spring-Return
120	98-9664	1	Shaft-Lever, Stop
130	98-9637	1	Gasket
140	98-7692	1	Bolt
150	127-0401	1	Bolt-Hex
160	98-7654	1	Gasket
170	105-3710	2	Stud
180	100-2203	2	Nut-Flange
190	117-7565	2	Bolt-Adjusting
200	117-7566	1	Bolt-Adjusting
210	98-7572	3	Nut

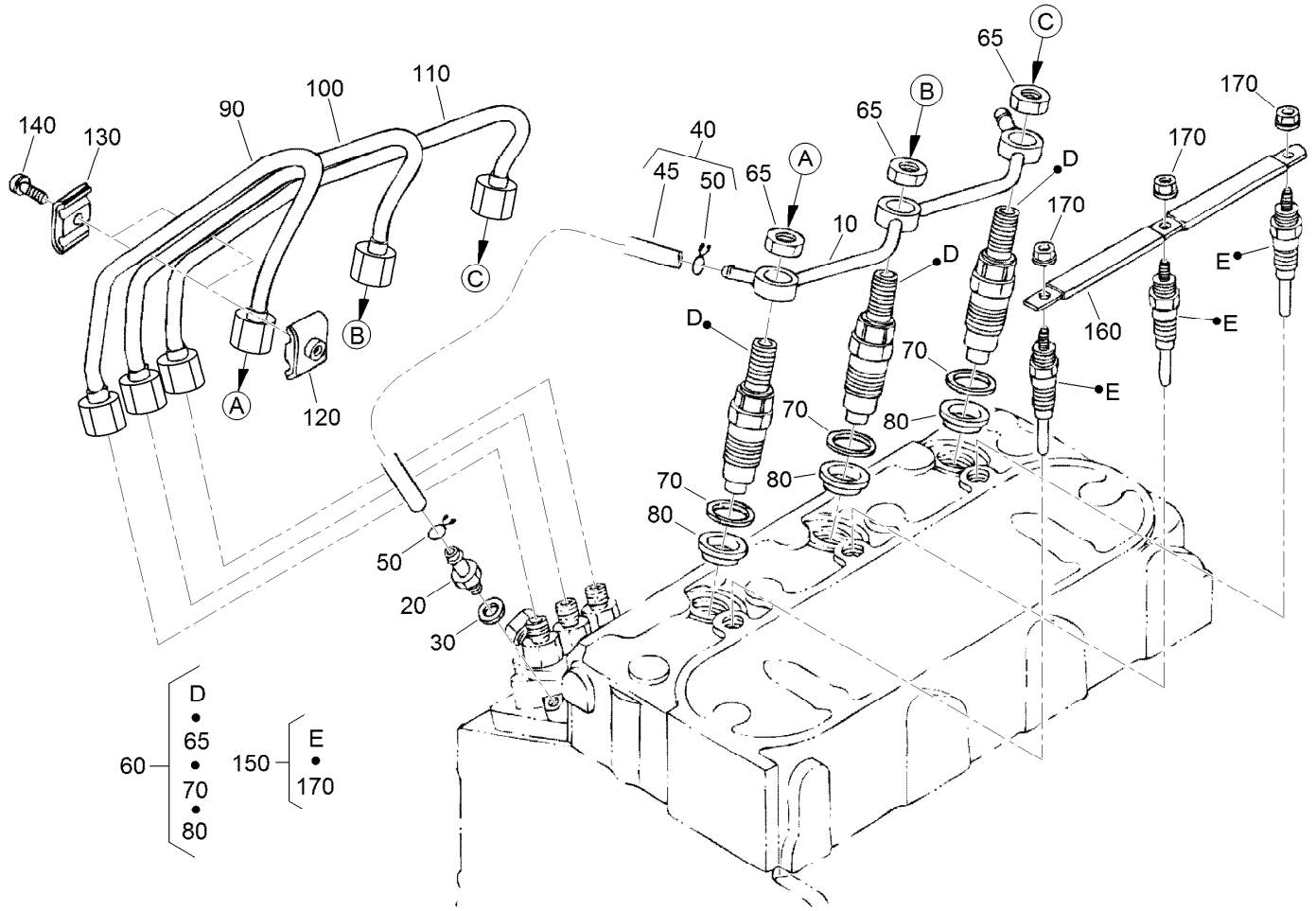

Nozzle Holder and Glow Plug Assembly

Ref.	Part Number	Qty.	Description
10	98-9620	1	Overflow Pipe ASM
20	98-9431	1	Screw-Bleeder, Air
30	98-7654	1	Gasket
40	98-9420	1	Overflow Pipe ASM
45	112-0182	1	Pipe-Overflow
50	98-7671	2	Clip-Pipe
60	115-3018	3	Nozzle Holder Kit
65	121-2411	3	Nut
70	98-7676	3	Gasket
80	98-7677	3	Seal-Heat

Ref.	Part Number	Qty.	Description
90	98-9653	1	Pipe-Injection
100	98-9654	1	Pipe-Injection
110	98-9655	1	Pipe-Injection
120	98-7682	2	Clamp-Pipe
130	98-7683	2	Clamp-Pipe
140	98-7684	2	Screw (W/Washer)
150	130-1411	3	Plug-Glow
160	98-9631	1	Cord-Plug, Glow
170	99-8377	3	Nut-Flange

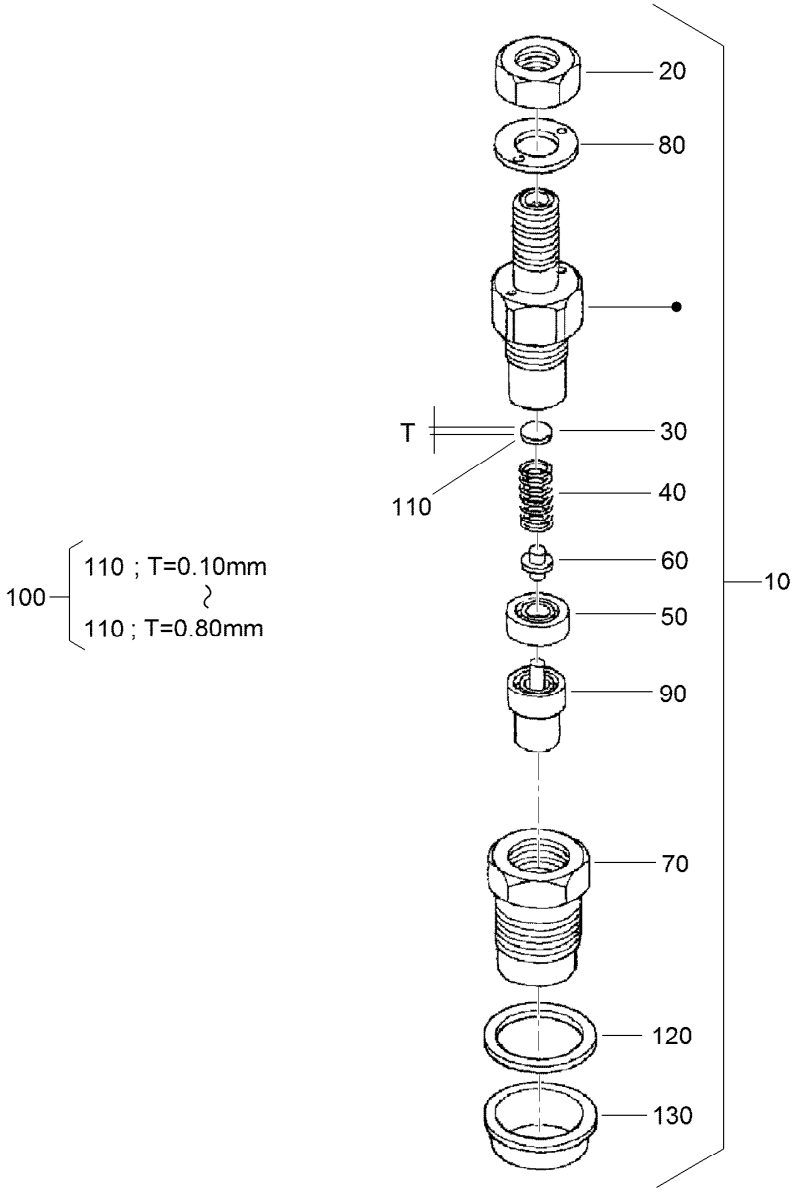

Nozzle Holder Assembly

Ref.	Part Number	Qty.	Description
10	115-3018	3	Nozzle Holder Kit
20	121-2411	3	Nut
30	99-8302	3	Washer-Adjusting
40	99-8303	3	Spring-Nozzle
50	99-8304	3	Spacer-Distance
60	99-8305	3	Rod-Push
70	99-8306	3	Nut-Nozzle
80	99-8307	3	Washer-Plain
90	115-3020	3	Piece-Nozzle
100	99-8309	3	Adjusting Washer ASM
110	99-8310	3	Washer-Adjust (0.10MM)

Ref.	Part Number	Qty.	Description
110	99-8311	3	Washer-Adjust (0.20MM)
110	99-8312	3	Washer-Adjust (0.30MM)
110	99-8313	3	Washer-Adjust (0.40MM)
110	99-8314	3	Washer-Adjust (0.50MM)
110	99-8315	3	Washer-Adjust (0.52MM)
110	99-8316	3	Washer-Adjust (0.54MM)
110	99-8317	3	Washer-Adjust (0.56MM)
110	99-8318	3	Washer-Adjust (0.58MM)
110	99-8319	3	Washer-Adjust (0.80MM)
120	98-7676	3	Gasket
130	98-7677	3	Seal-Heat

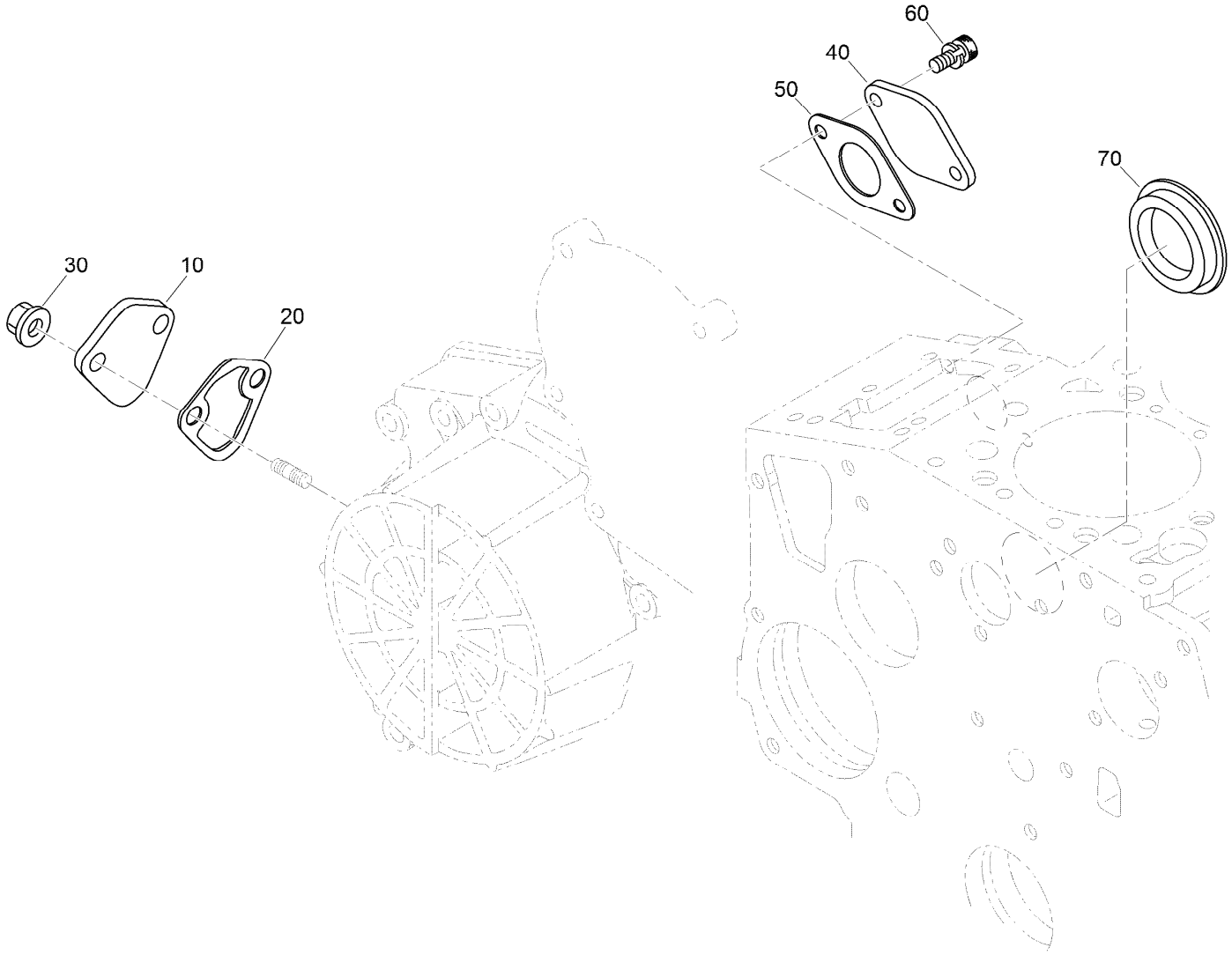

Cover Assembly

Ref.	Part Number	Qty.	Description
10	99-3514	1	Cover
20	117-7562	1	Gasket-Pump, Fuel
30	100-2203	2	Nut-Flange
40	127-0419	1	Cover-Solenoid
50	98-9683	1	Gasket-Cover, Solenoid
60	130-1155	2	Screw-HSH
70	112-7016	1	Cover-Pump

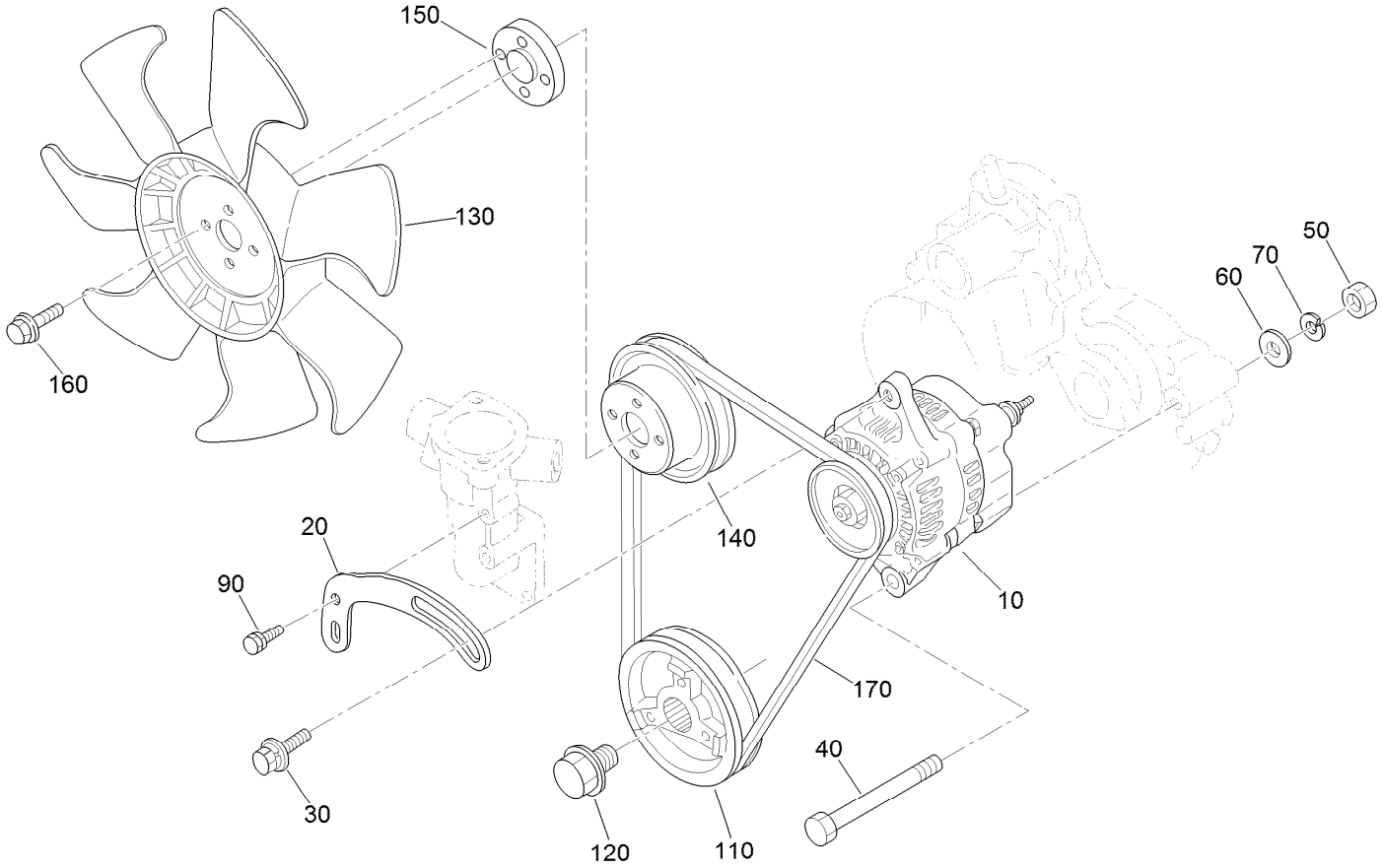

Alternator, Pulley and Fan Assembly

Ref.	Part Number	Qty.	Description
10	131-6557	1	Alternator ASM
20	112-7047	1	Stay-Dynamo
30	108-7088	1	Bolt
40	98-9360	1	Bolt
50	98-7737	1	Nut
60	98-9366	1	Washer-Plain
70	98-7738	1	Washer-Spring
90	98-7692	1	Bolt
110	98-9473	1	Pulley-Drive, Fan
120	98-9585	1	Bolt
130	110-0966	1	Fan-Cooling
140	130-1567	1	Pulley-Fan
150	108-2872	1	Collar-Fan
160	108-2873	4	Bolt-Flange
170	104-3494	1	Belt-V

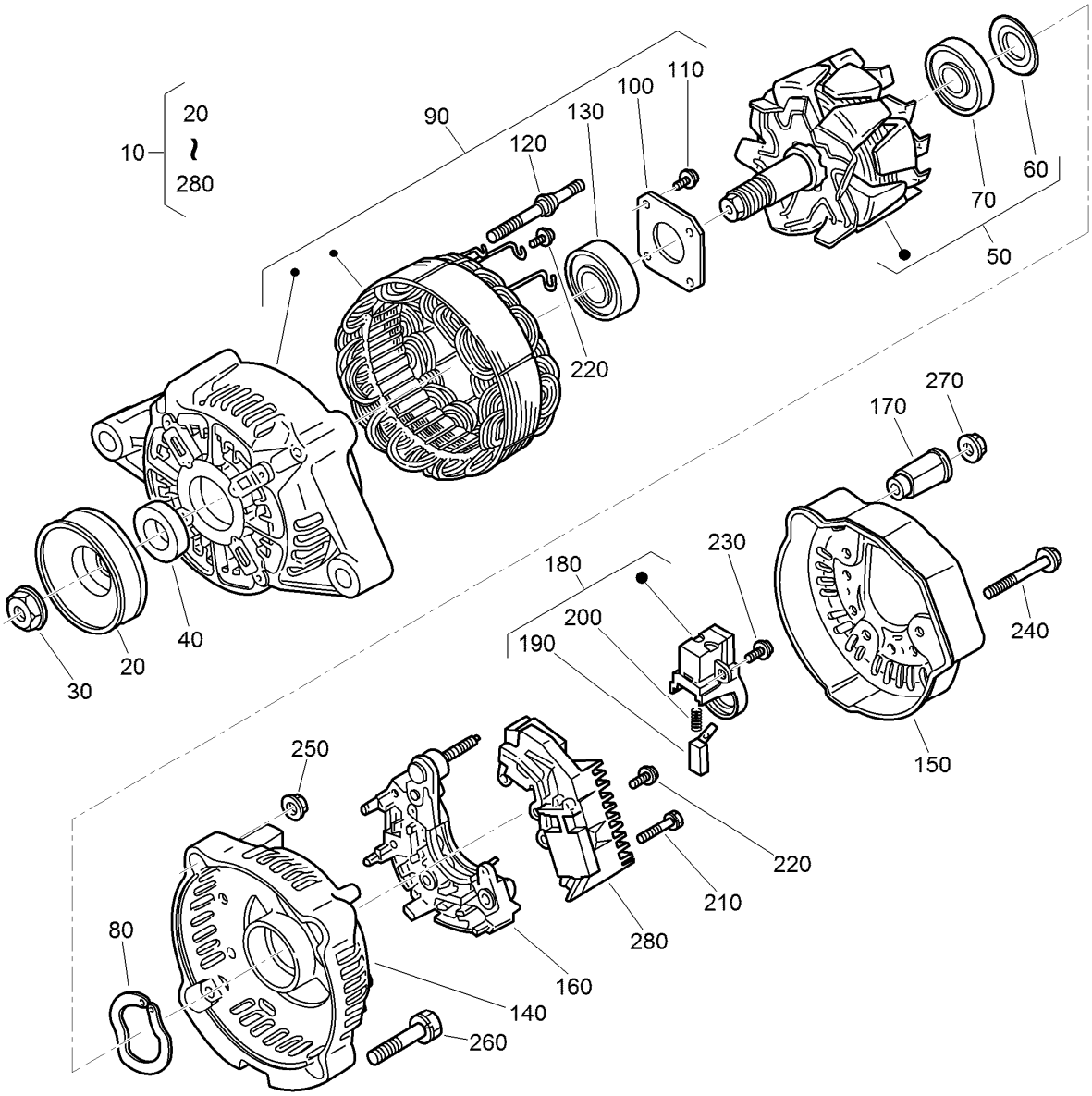

Alternator Assembly No. 131-6557

Ref.	Part Number	Qty.	Description
10	131-6557	1	Alternator ASM
20	98-9453	1	Pulley-Dynamo
30	98-7708	1	Nut
40	98-7709	1	Collar
50	107-0136	1	Rotor ASM
60	98-7711	1	Cover-Bearing
70	107-0138	1	Bearing-Ball
80	98-7713	1	Washer-Thrust
90	131-6559	1	Frame-End, Drive
100	98-7715	1	Plate-Retainer
110	98-7716	4	Screw-Head, Round
120	98-7717	2	Bolt-Through
130	133-2811	1	Bearing
140	107-9087	1	Frame-End

Ref.	Part Number	Qty.	Description
150	107-0140	1	Cover-End
160	127-1612	1	Rectifier ASM
170	98-7722	1	Bushing-Insulation
180	107-0141	1	Brush Holder ASM
190	98-7724	2	Brush
200	98-7725	2	Spring-Brush
210	98-7726	2	Screw-Head, Round
220	98-7727	6	Screw-Head, Round
230	98-7728	1	Screw-Head, Round
240	98-7729	3	Bolt
250	98-7730	2	Nut
260	98-7731	2	Bolt
270	98-7732	1	Nut
280	110-3799	1	Regulator ASM

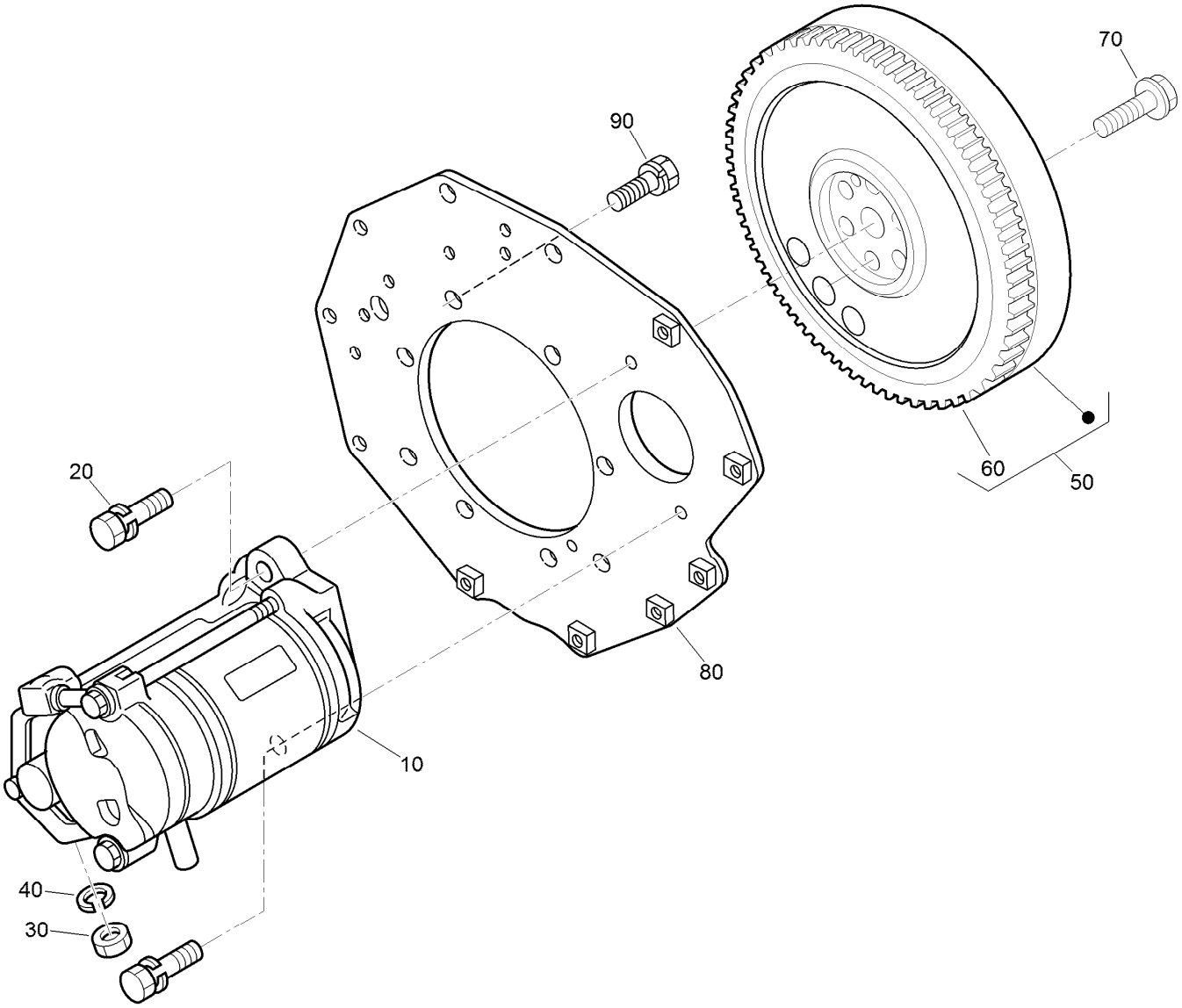

Starter and Flywheel Assembly

Ref.	*Part Number*	*Qty.*	*Description*
10	131-6561	1	Starter ASM
20	98-7697	2	Bolt
30	98-7739	1	Nut
40	105-2893	1	Washer-Spring
50	105-3784	1	Flywheel ASM
60	115-3015	1	Gear-Ring
70	98-9537	6	Bolt-Flywheel
80	98-9486	1	Plate-End, Rear
90	98-9392	8	Bolt

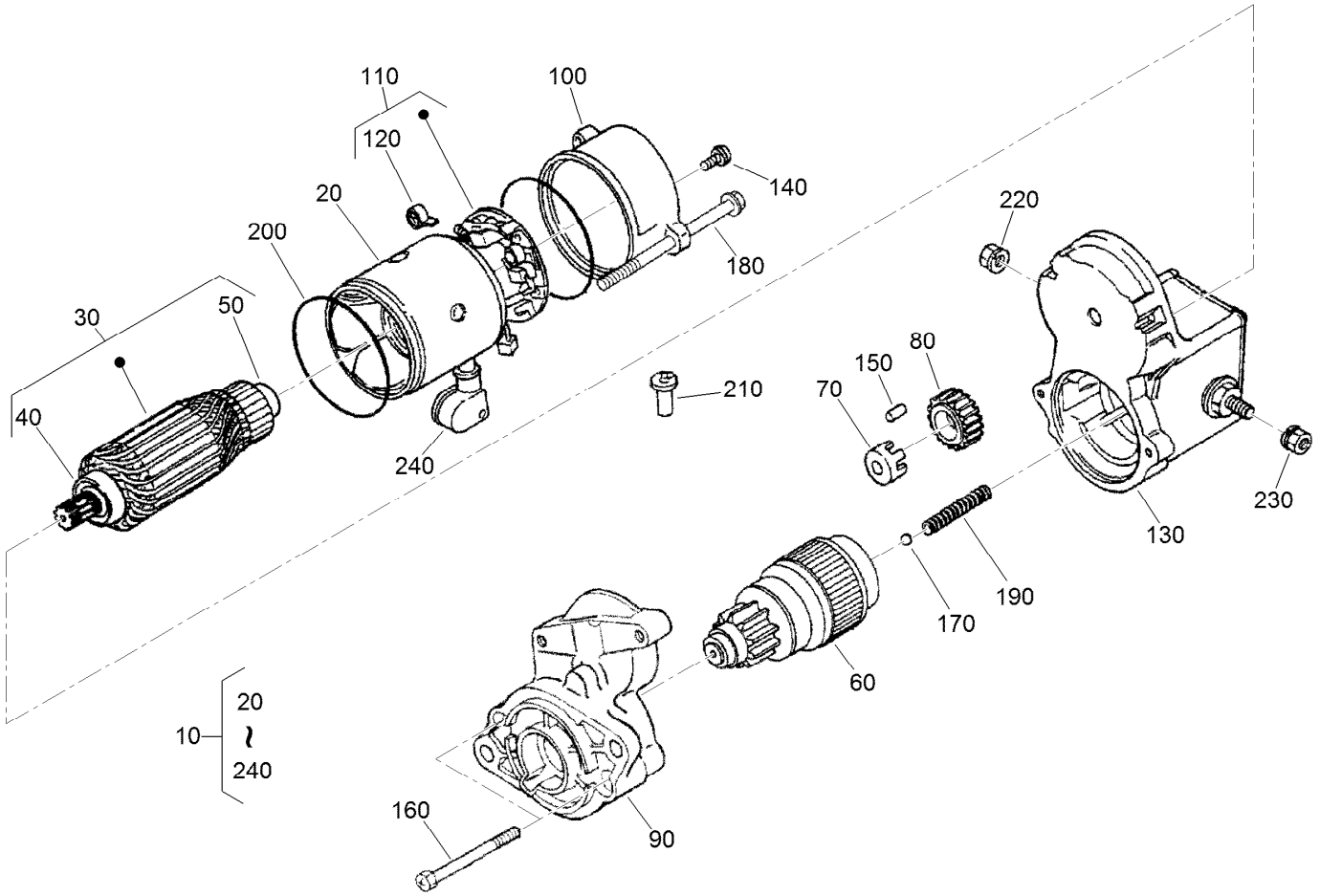

Starter Assembly No. 131-6561

Ref.	Part Number	Qty.	Description
10	131-6561	1	Starter ASM
20	98-7741	1	Yoke ASM
30	98-7742	1	Armature ASM
40	98-7744	1	Bearing
50	98-7743	1	Bearing
60	99-8373	1	Clutch-Running, Over
70	98-7752	1	Retainer
80	98-7751	1	Gear
90	99-8374	1	Frame-End, Drive
100	98-7748	1	Frame-End
110	98-7749	1	Brush Holder ASM
120	98-7750	4	Spring-Brush

Ref.	Part Number	Qty.	Description
130	99-8372	1	Magnetic Switch ASM
140	98-7758	2	Bolt ASM
150	98-7753	5	Roller
160	98-7756	2	Bolt
170	98-7755	1	Ball
180	100-9240	2	Bolt
190	98-7754	1	Spring
200	98-7757	2	O-Ring
210	98-7759	1	Pipe-Drain
220	99-8376	1	Nut-Hex
230	98-7760	1	Nut-Hex
240	110-0020	1	Cover-Terminal

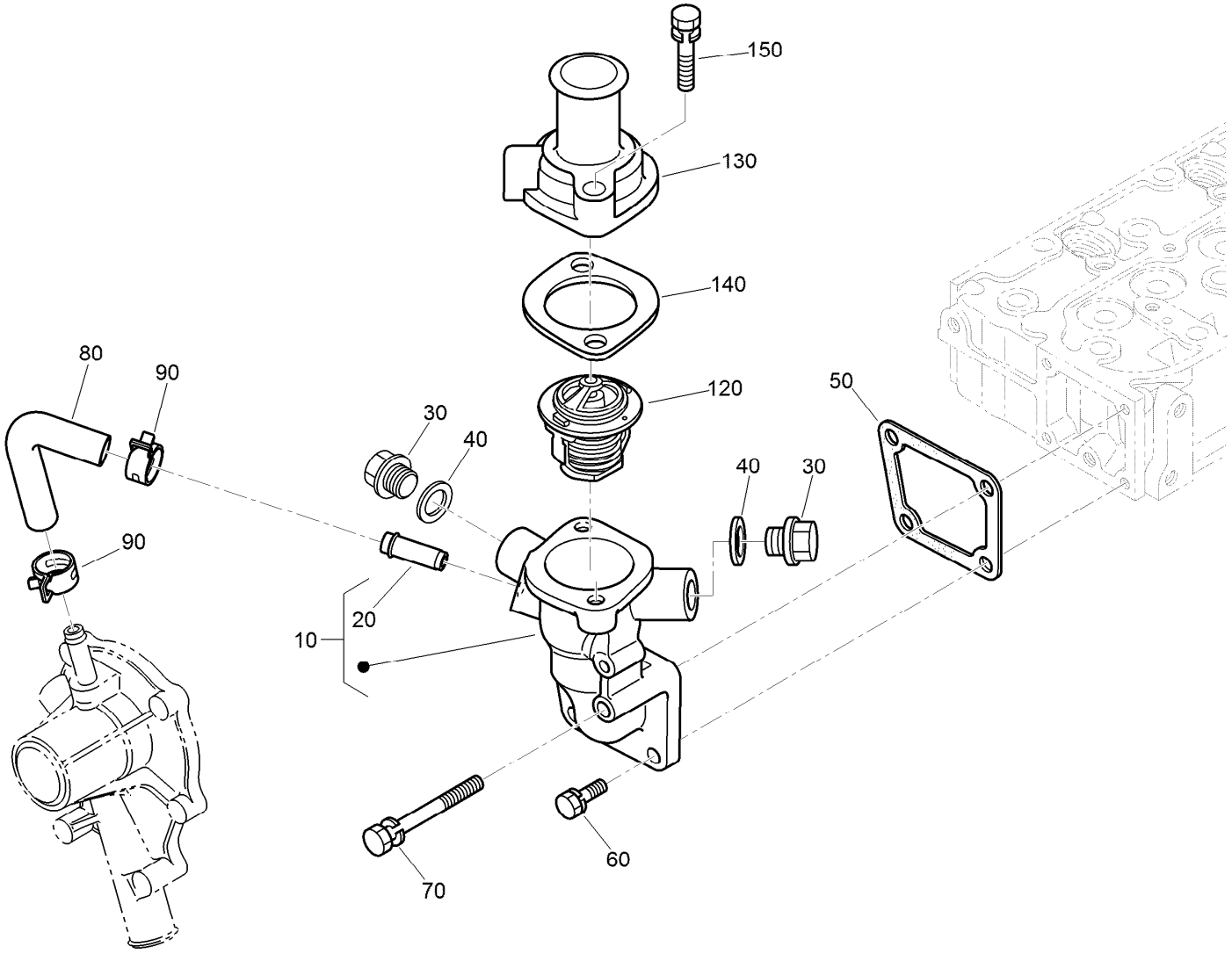

Water Flange and Thermostat Assembly

Ref.	Part Number	Qty.	Description
10	98-9713	1	Water Flange ASM
20	98-9580	1	Pipe-Return, Water
30	105-3747	2	Plug
40	99-3583	2	Gasket
50	98-9638	1	Gasket-Flange, Water
60	98-7692	3	Bolt
70	98-9356	1	Bolt
80	98-9578	1	Pipe-Return, Water
90	125-9078	2	Clamp-Hose
120	98-7778	1	Thermostat ASM
130	98-9471	1	Cover-Thermostat
140	105-3748	1	Gasket-Thermostat
150	98-7777	2	Bolt

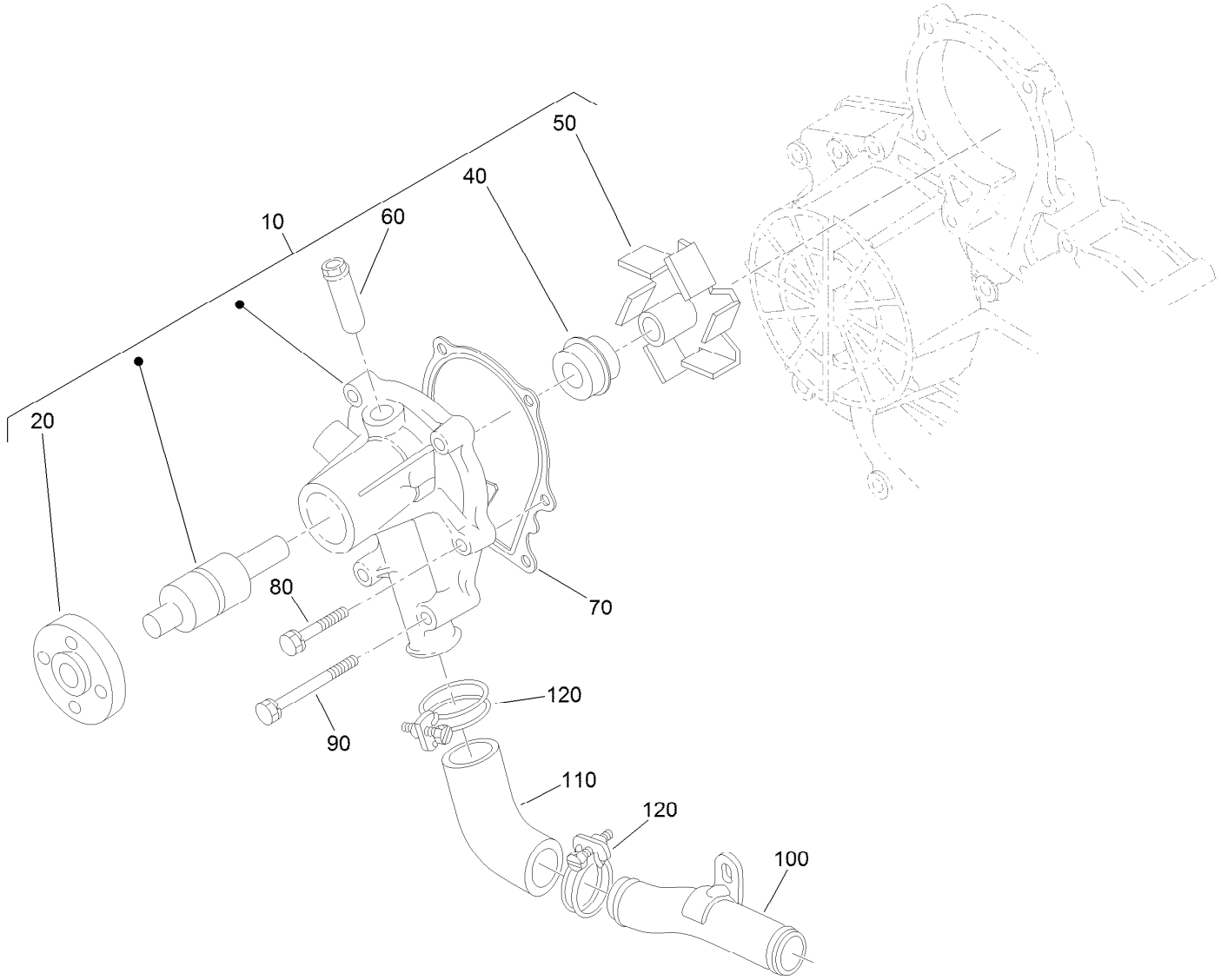

Water Pump Assembly

Ref.	Part Number	Qty.	Description
10	107-9089	1	Water Pump ASM
20	99-3516	1	Flange-Pump, Water
40	105-3750	1	Mechanical Seal ASM
50	112-7017	1	Impeller-Pump, Water
60	100-1932	1	Pipe-Return, Water
70	99-3454	1	Gasket-Pump, Water
80	98-9353	4	Bolt
90	107-9090	2	Bolt
100	98-9716	1	Pipe-Water
110	107-9091	1	Pipe-Water
120	127-0439	2	Clamp-Hose

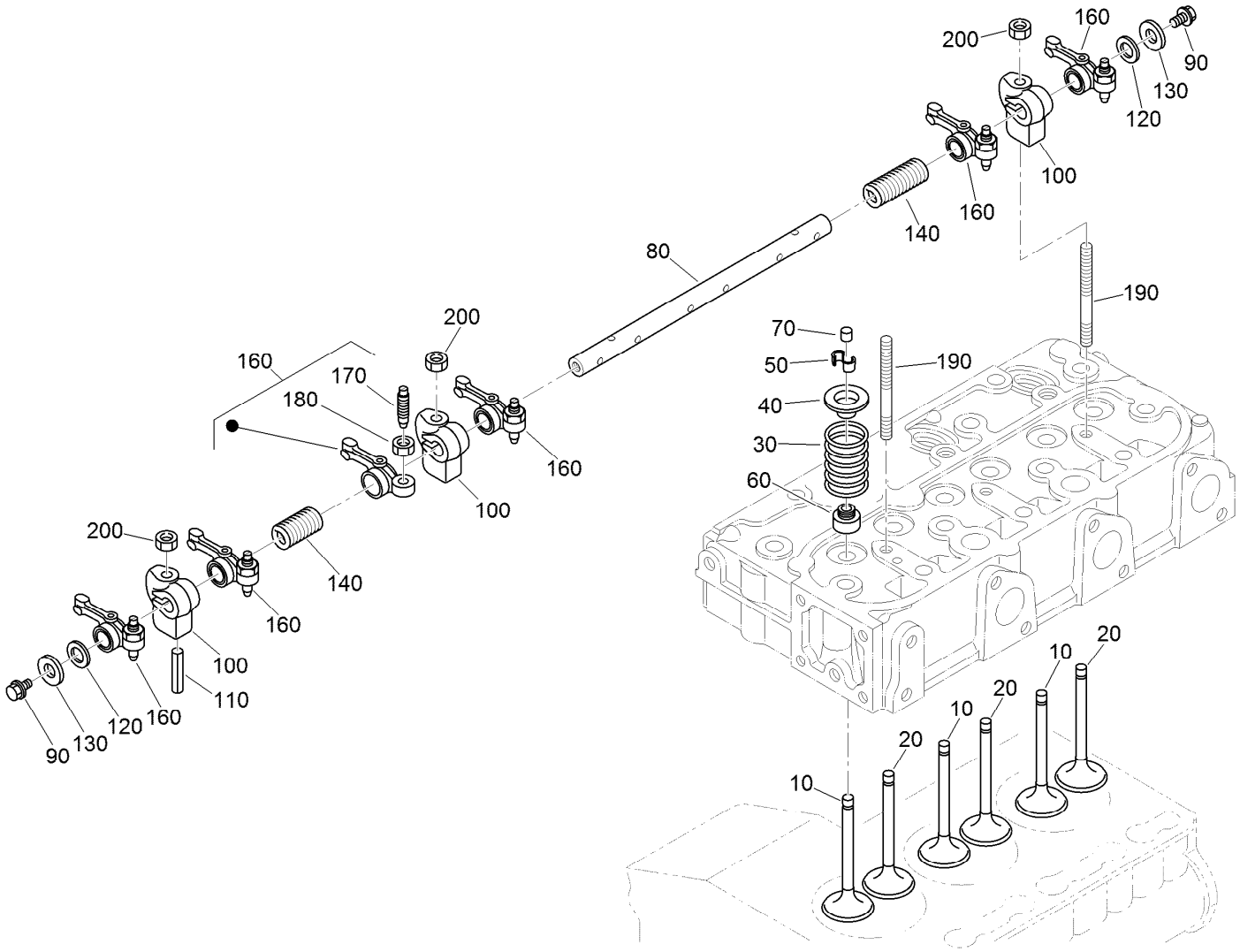

Valve and Rocker Arm Assembly

Ref.	Part Number	Qty.	Description
10	112-7018	3	Valve-Inlet
20	120-2564	3	Valve-Exhaust
30	98-9648	6	Spring-Valve
40	107-9092	6	Retainer-Spring
50	117-7572	6	Collet-Spring, Valve
60	99-8385	6	Seal-Stem, Valve
70	98-9497	6	Cap-Valve
80	130-1248	1	Shaft-Arm, Rocker
90	99-8363	2	Bolt-Flange
100	98-9505	3	Bracket-Arm, Rocker

Ref.	Part Number	Qty.	Description
110	105-3758	1	Pin-Spring
120	98-9507	2	Washer-Shaft, Rocker Arm
130	110-3832	2	Washer-Plain
140	98-9504	2	Spring-Arm, Rocker
160	112-7020	6	Rocker Arm ASM
170	98-9502	6	Screw-Adjusting
180	98-9503	6	Nut
190	98-9506	3	Stud
200	131-6563	3	Nut-Flange

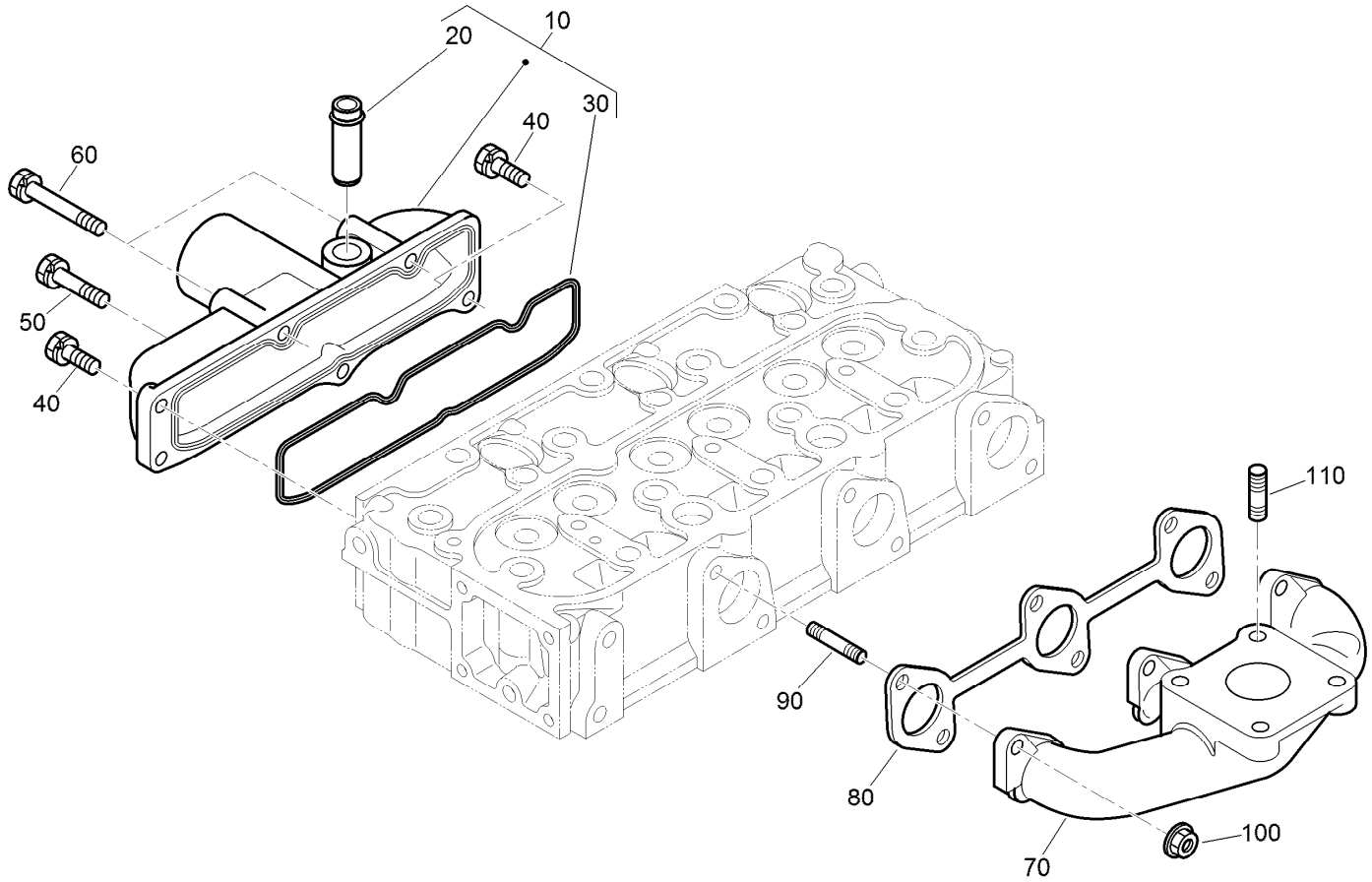

Inlet and Exhaust Manifold Assembly

Ref.	*Part Number*	*Qty.*	*Description*
10	108-6577	1	Inlet Manifold ASM
20	98-9492	1	Joint-Pipe, Breather
30	98-9609	1	Gasket-Manifold, Inlet
40	127-0403	3	Bolt-Flange
50	98-9353	1	Bolt
60	125-9063	2	Bolt-Sems
70	107-9093	1	Manifold-Exhaust
80	99-8327	1	Gasket-Manifold, Exhaust
90	98-9588	6	Stud
100	98-9665	6	Nut
110	98-7769	4	Stud

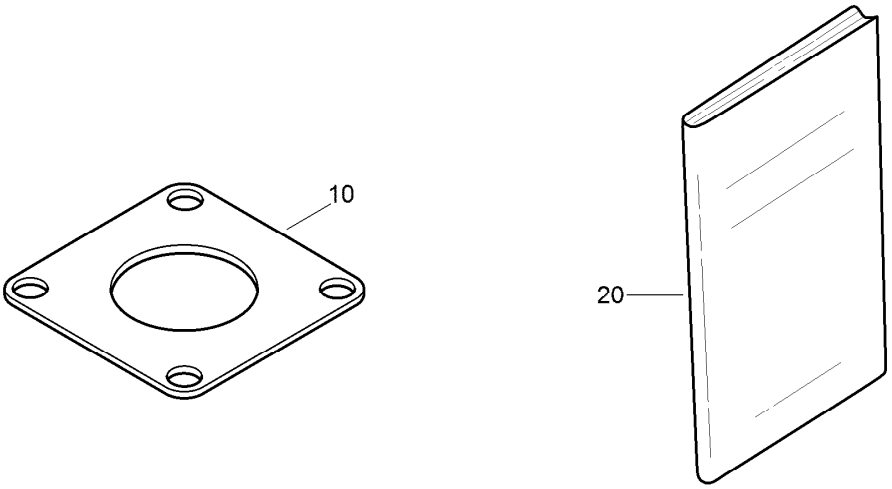

Miscellaneous Engine Parts

Ref.	*Part Number*	*Qty.*	*Description*
10	99-8343	1	Gasket-Muffler
20	130-1543	1	Manual-Operator

Attachments and Accessories

For 03674 Reelmaster 5010-H Traction Unit

Product Name	Model/Part
Operator Cooling Fan	03247
Switch Panel-Universal Sunshade	03248
Snorkel Kit (for Generator - 5010-h)	03448
2 Post ROPS Extension Kit	03611
Operator Golf Ball Guard, Reelmaster 3100/3500/5010 or Groundsmaster 3500/4300 Series Traction Unit	03614
5 Inch Reel Verticutter	03618
Verticutter for 7in Reel Cutting Unit	03619
8-Blade EdgeSeries Radial Reel DPA Cutting Unit with 5in Reel, Reelmaster 5010 Series Traction Unit	03621
11-Blade EdgeSeries Forward Swept Reel DPA Cutting Unit with 5in Reel, Reelmaster 5010 Series Traction Unit	03623
22in 5in 11 Bld (rr) Dpa Cu (5010)	03624
8-Blade Radial Reel DPA Cutting Unit with 7in Reel	03638
8-Blade Forward Swept Reel DPA Cutting Unit with 7in Reel	03639
11-Blade Forward Swept Reel DPA Cutting Unit with 7in Reel	03641
7-in, 11 Blade ES (RR) DPA Cutting Unit	03643
Finishing Kit, DPA Cutting Unit with 5in Reel, Reelmaster 5010-H Series Traction Unit	03647
Finishing Kit, DPA Cutting Unit with 7in Reel, Reelmaster 5010-H Series Traction Unit	03649
CrossTrax All-Wheel Drive Kit	03655
CrossTrax All-Wheel Drive Finishing Kit	03656
Air Ride Seat Suspension Kit	03667
Turf Evaluator	04399
Wheel Weight Kit	104-1478
Premium All Purpose Grease (Tube)	108-1190
Weight Plate	110-8985-03
Rear Lift Cylinder Limit Kit	110-9604
5in Air Cleaner Safety Element	114-4057
Premium Synthetic Bio-Degradable Hydraulic Fluid (5 Gallon Pail)	119-2157
Premium Synthetic Bio-Degradable Hydraulic Fluid (55 Gallon Drum)	119-2158
Premium Engine Oil 10w30 (55 Gallon Drum)	121-6392
Premium Engine Oil 10w30 (5 Gallon Pail)	121-6393
Smooth Rear Tire	127-2796
Hi-Back Seat Cover	133-1308
Smooth Front Tire	133-2940
PX Hydraulic Fluid (5 Gal)	133-8086
PX Hydraulic Fluid (55 Gal)	133-8087
Pin and Lanyard Asm	136-8045
Beacon Kit	138-2699
Sunshade Work Lights Kit	138-2700
Power Harness Kit	138-2993
Brush and Handle Kit	29-9100
White Universal Sunshade	30669
Red Universal Sunshade	30671
EU Light Kit	31579

Attachments and Accessories (continued)

New Red Paint - Gallon 361-11
Dark Metallic Gray Aerosol Paint 361-12
Semi-Gloss Black Spray Paint 361-9
Axle Tube Assembly 44966
Air Dry Red Paint - Qt 5340
Spark Arrestor 98-9099

Notes:

Notes:

TORO®

Count on it.