Form No. 3326-959

# 11 Blade Cutting Unit

## Greensmaster® Flex 21

**Model No. 04200—220000001 and Up**

# Parts Catalog

### Ordering Replacement Parts

To order replacement parts, please supply: the part number, the quantity, and the description of each part desired.

### Understanding Reference Numbers

Each identified part in an illustration has a reference number. The reference number for a part also appears in the parts list, along with other information about the part.

This catalog uses two special reference number formats, one to indicate parts in a service assembly and another to indicate the quantity of a given part in an illustration.

#### Service Assembly Reference Numbers

Parts in service assemblies have reference numbers in the form **a:b.** The **a** represents the reference number of the entire service assembly and the **b** represents a sequential number unique to each part within the service assembly.

For example, a wheel assembly might be identified by reference number **6**, the tire by **6:1**, the valve by **6:2**, and the wheel by **6:3**. When you order the assembly identified by reference number 6, you receive all parts identified by reference numbers 6:1, 6:2, and 6:3. However, you may also order any part individually.

Reference numbers of this type appear in illustrations and in part lists.

#### Reference Numbers Indicating Quantity

In an illustration, if a reference number indicates more than one part, the reference number has the form **nX y.** The **n** represents the quantity of the part, the **X** is the multiplication symbol, and the **y** represents the reference number.

For example, in an illustration, the reference number **2X 37** means that two of the parts identified by reference number 37 are indicated.

© The TORO Company — 2002
All Rights Reserved

# Contents


| Description | Page |
|---|---|
| Right and Left Side Plate Assembly | 3 |
| Reel Assembly | 4 |
| Roller Assembly | 5 |
| Reel Drive Assembly | 6 |


## Part Description Abbreviations

Part descriptions in this catalog may include the following abbreviations.

| Abbreviation | Meaning |
|---|---|
| AR | as required |
| ASM | assembly |
| CARR | carriage |
| DEG | degrees |
| FH | flat head |
| GA | gauge |
| HF | hex flange |
| HH | hex head |
| HHF | hex head flange |
| HLH | hex lag head |
| HJ | hex jam |
| HOC | height-of-cut |
| HS | hex socket |
| HSBH | hex socket button head |
| HSFH | hex socket flat head |
| HSH | hex socket head |
| HWH | hex washer head |
| HWHTF | hex washer head thread forming |
| HYD | hydraulic |
| INC | incorporated |
| LH | left hand |
| NI | nylon insert |
| PPH | Phillips pan head |
| PTH | Phillips truss head |
| PTO | power take off |
| RH | right hand |
| SFH | slotted fillister head |
| SHH | slotted hex head |
| SQH | square head |
| SHWH | slotted hex washer head |
| SPH | slotted pan head |
| SRH | slotted round head |
| STD | standard |
| TAP | self tapping |
| TTH | Torx truss head |
| WH | wing head |

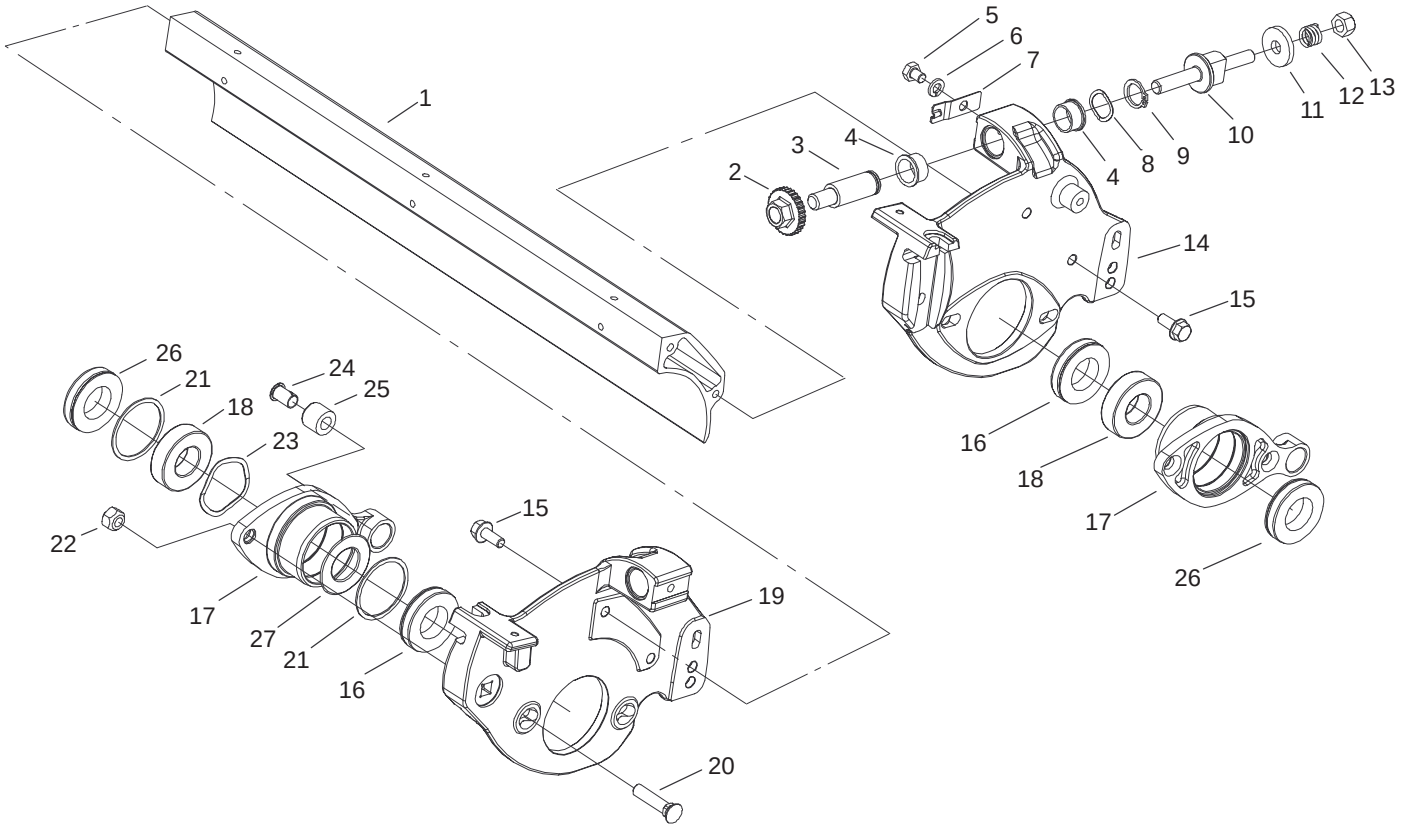


Sheet No.:2

# Right and Left Side Plate Assembly

| Ref. No. | Part No. | Qty. | Description |
|---|---|---|---|
| 1 | 99–2091 | 1 | Frame–Shield, Extrusion |
| 2 | 93–2549 | 2 | Nut–Adjust |
| 3 | 99–2093 | 2 | Nut–Adjuster, Bedbar |
| 4 | 256–252 | 4 | Bearing–Flange |
| 5 | 33114–010 | 2 | Screw–HH |
| 6 | 3253–4 | 2 | Washer–Lock |
| 7 | 99–2097 | 2 | Detent |
| 8 | 95–3703 | 2 | Washer–Spring, Wave |
| 9 | 32120–93 | 2 | Ring–Retaining |
| 10 | 99–2096 | 2 | Screw–Adjuster, Bedbar |
| 11 | 99–2098 | 2 | Washer |
| 12 | 99–3755 | 2 | Spring–Compression |
| 13 | 33025–00 | 2 | Nut–Lock |
| 14 | 105–5348 | 1 | Plate–Side, LH |
| 15 | 33104–020 | 4 | Screw–HHF |
| 16 | 105–9945 | 2 | Seal–Grease, Blue |
| 17 | 99–3766 | 2 | Housing–Bearing, Reel |
| 18 | 251–342 | 2 | Bearing–Ball |
| 19 | 105–5347 | 1 | Plate–Side, RH |
| 20 | 105–5342 | 4 | Bolt–Plow |
| 21 | 32151–92 | 2 | Ring–Retaining |
| 22 | 105–5344 | 4 | Nut–Tapered |
| 23 | 3290–485 | 1 | Washer–Wave |

| Ref. No. | Part No. | Qty. | Description |
|---|---|---|---|
| 24 | 52–2890 | 2 | Bushing–Nylon |
| 25 | 63–9510 | 2 | Bushing |
| 26 | 105–9945 | 2 | Seal–Grease, Blue |
| 27 | 105–9943 | 1 | Washer–Thrust |

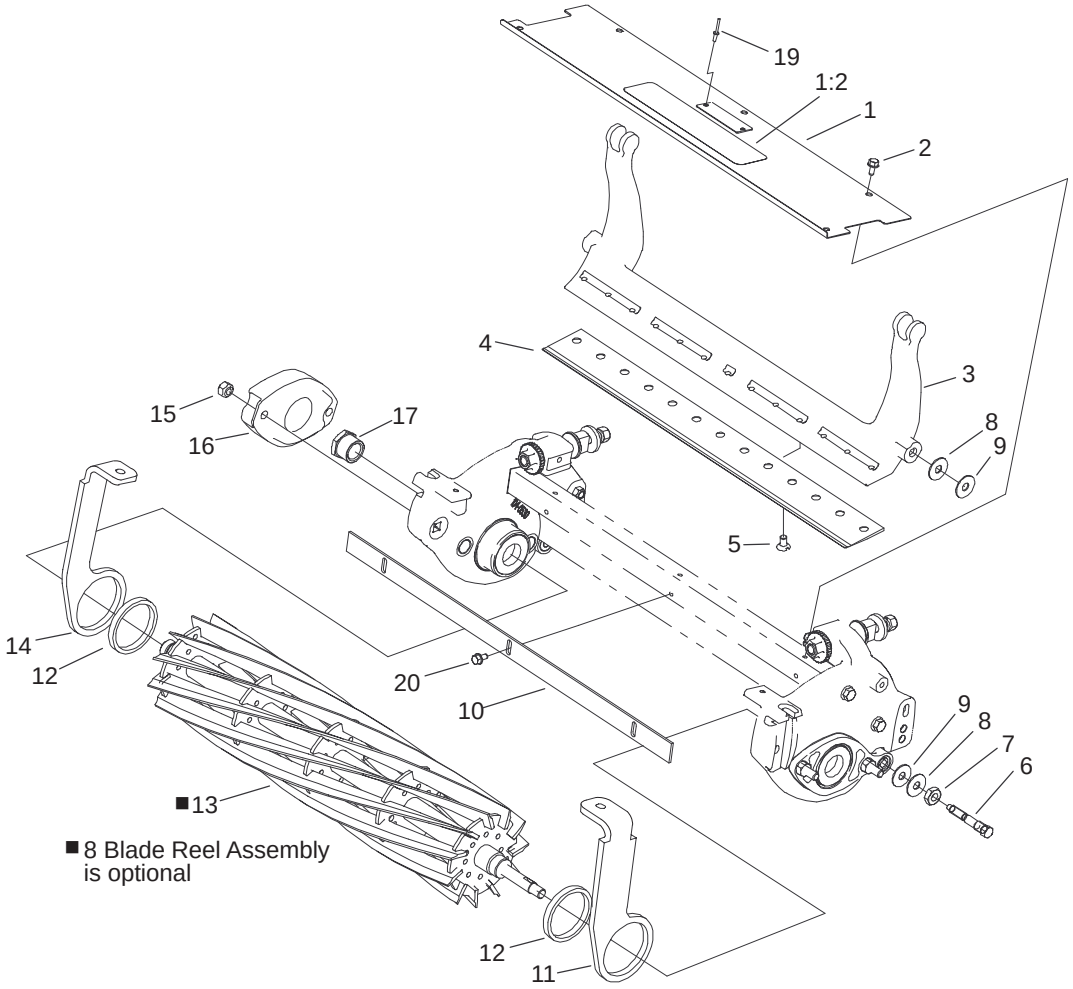


Sheet No.:3

# Reel Assembly

| Ref. No. | Part No. | Qty. | Description |
|---|---|---|---|
| 1 | 104–2632 | 1 | Grass Shield ASM |
| 1:2 | 84–6560 | 1 | Decal–Warning (Japan) |
| 1:2 | 93–8064 | 1 | Decal–Danger (Europe) |
| 2 | 104–2628 | 5 | Screw–HWH |
| 3 | 99–3794–01 | 1 | Bedbar |
| 4 | 104–7720 | 1 | Bedknife–Microcut, Extended |
| 4 | 93–4262 | 1 | Bedknife–Microcut |
| 4 | 93–4263 | 1 | Bedknife–Tournament |
| 4 | 93–4264 | 1 | Bedknife–Lowcut |
| 5 | 57–4910 | 13 | Screw |
| 6 | 65–6270 | 2 | Bolt–Bedbar |
| 7 | 3220–26 | 2 | Nut–Jam |
| 8 | 52–2860 | 4 | Washer |
| 9 | 52–2900 | 4 | Washer |
| 10 | 104–2602–03 | 1 | Bar–Off, Cut |
| 11 | 105–2448–01 | 1 | Arm–Pitch, LH |
| 12 | 99–2047 | 2 | Bushing |
| 13 | 104–0500 | 1 | 11 Blade Reel ASM |
| 13 | 105–2400 | 1 | 8 Blade Reel ASM |
| 14 | 105–2447–01 | 1 | Arm–Pitch, RH |
| 15 | 104–2611 | 2 | Nut–HF |
| 16 | 104–0534–03 | 1 | Weight–Reel |
| 17 | 99–3767 | 1 | Nut–Lock, Bearing |

| Ref. No. | Part No. | Qty. | Description |
|---|---|---|---|
| 19 | 3290–271 | 2 | Rivet–Pop |
| 20 | 56–6380 | 3 | Screw |

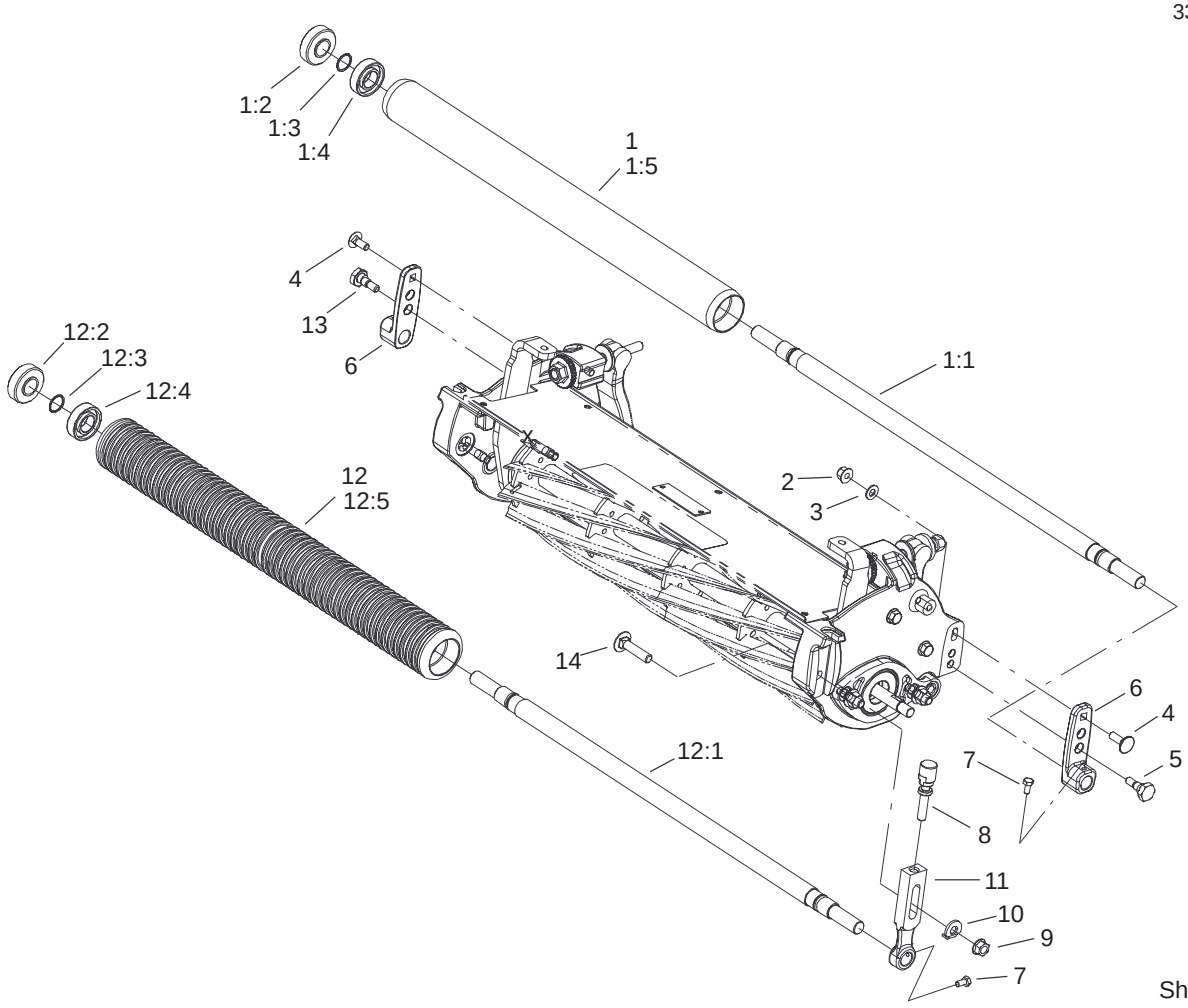


Sheet No.:4

# Roller Assembly

| Ref. No. | Part No. | Qty. | Description |
|---|---|---|---|
| 1 | 99–3840 | 1 | Full Roller ASM |
| 1:1 | 104–2606 | 1 | Shaft–Roller |
| 1:2 | 99–3842 | 2 | Seal–Oil |
| 1:3 | 32120–15 | 2 | Ring–Snap, Ext |
| 1:4 | 251–347 | 2 | Bearing–Ball |
| 1:5 | 99–3841 | 1 | Roller–Full |
| 2 | 104–2612 | 4 | Nut–HF |
| 3 | 3256–23 | 4 | Washer–Flat |
| 4 | 33124–025 | 2 | Screw–CARR |
| 5 | 105–3834 | 1 | Bolt–Shoulder |
| 6 | 99–3792 | 2 | Bracket–Roller, Rear |
| 7 | 33113–012 | 4 | Screw–HH |
| 8 | 99–3782 | 2 | Screw–HOC |
| 9 | 104–2611 | 2 | Nut–HF |
| 10 | 104–2603 | 2 | Washer–HOC |
| 11 | 99–3781 | 2 | Arm–HOC |
| 12 | 104–9795 | 1 | Wiehle Roller ASM |
| 12:1 | 104–2606 | 1 | Shaft–Roller |
| 12:2 | 99–3842 | 2 | Seal–Oil |
| 12:3 | 32120–15 | 2 | Ring–Snap, Ext |
| 12:4 | 251–347 | 2 | Bearing–Ball |
| 12:5 | 104–0540 | 1 | Roller–Wiehle |
| 13 | 105–3833 | 1 | Bolt–Eccentric |
| 14 | 105–5342 | 2 | Bolt–Plow |

| Ref. No. | Part No. | Qty. | Description |
|---|---|---|---|

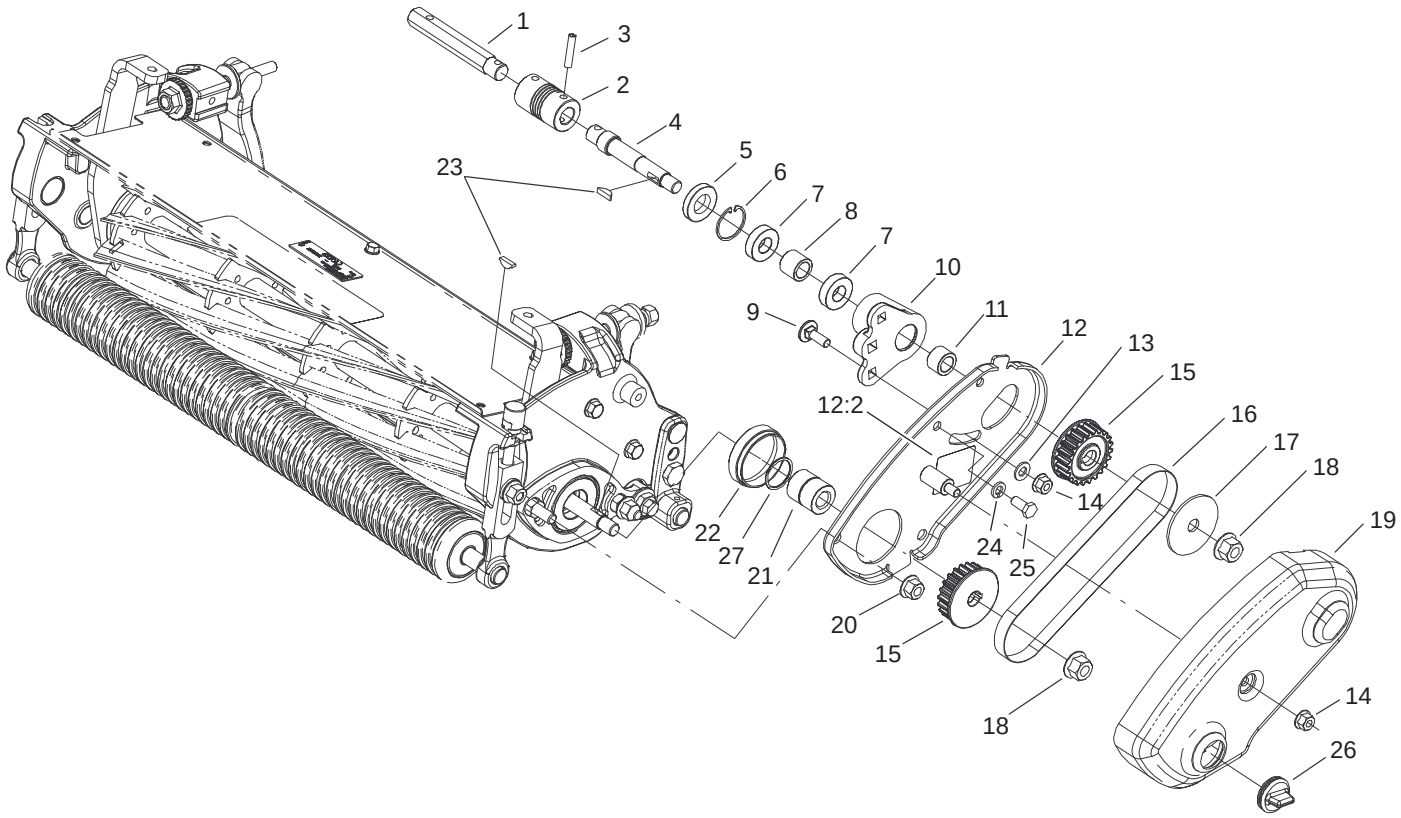


Sheet No.:5

# Reel Drive Assembly

| Ref. No. | Part No. | Qty. | Description |
|---|---|---|---|
| 1 | 99–3760 | 1 | Shaft–Hex |
| 2 | 99–3757 | 1 | Coupling–Flex |
| 3 | 32121–69 | 2 | Pin–Spring |
| 4 | 99–3756 | 1 | Shaft |
| 5 | 253–120 | 1 | Seal–Oil |
| 6 | 32151–51 | 1 | Ring–Retaining |
| 7 | 251–336 | 2 | Bearing |
| 8 | 99–2079 | 1 | Spacer |
| 9 | 33124–025 | 2 | Screw–CARR |
| 10 | 99–2083 | 1 | Housing–Bearing |
| 11 | 99–2080 | 1 | Spacer |
| 12 | 104–2631 | 1 | Reel Drive Plate ASM |
| 12:2 | 93–9356 | 1 | Decal–Warning, Belt |
| 12:2 | 93–9389 | 1 | Decal–Warning, Belt (Japan) |
| 13 | 3256–23 | 2 | Washer–Flat |
| 14 | 104–2612 | 3 | Nut–HF |
| 15 | 99–2081 | 2 | Pulley–22 Tooth |
| 16 | 99–2022 | 1 | Belt |
| 17 | 104–0532 | 1 | Washer–Pulley |
| 18 | 104–2610 | 2 | Nut–HF |
| 19 | 99–3793 | 1 | Cover–Drive, Reel |
| 20 | 104–2611 | 2 | Nut–HF |
| 21 | 99–2032 | 1 | Spacer |
| 22 | 99–2087 | 1 | Spacer |
| 23 | 3257–30 | 2 | Key–Woodruff |

| Ref. No. | Part No. | Qty. | Description |
|---|---|---|---|
| 24 | 3253–4 | 1 | Washer–Lock |
| 25 | 33114–016 | 1 | Screw–HH |
| 26 | 105–2438 | 1 | Plug |
| 27 | 32120–69 | 1 | Ring–Snap |

# Maintenance Record

| Date | | | | | | | | |
|---|---|---|---|---|---|---|---|---|
| | | | | | | | | |
| | | | | | | | | |
| | | | | | | | | |


TORO®