FORM NO. 3326–998

TORO

MODEL NO. 07249–220000001 & UP
MODEL NO. 07225–220000001 & UP

OPERATORS MANUAL

CAB
for Workman Vehicles

SAFETY INSTRUCTIONS

BEFORE OPERATING

1. Read and understand the contents of this manual before operating the vehicle. Become familiar with all controls and know how to stop quickly. A free replacement manual is available by sending complete model and serial number to:

The Toro Company
8111 Lyndale Avenue South
Minneapolis, MN 55420–1196

2. Do not allow children to operate the vehicle. Do not allow adults to operate it without proper instruction.

3. Keep all shields and safety devices in place. If a safety device, shield or decal malfunctions, becomes damaged or illegible, replace it before operation is commenced. To assure vehicle is in safe operating condition, tighten loose nuts, bolts and screws.

4. With cab installed, payload capacity of vehicle is reduced by 260 lbs.

WHILE OPERATING

5. Verify capacity ratings for vehicle. Make sure GVW, front axle and rear axle capacities are not exceeded. Make sure front axle capacity is not exceeded when adding additional attachments to front of vehicle with cab installed. A cab with glass doors installed adds 310 lb. to front axle. A cab with soft doors installed adds 215 lb. to front axle.

6. To avoid tipover, operate vehicle only if equipped with dump box or other rear attachment weighing at least 200 lbs.

7. Avoid sudden stops and sharp turns.

8. Always use safety belts.

9. Never allow riders on top of cab at any time.

MAINTENANCE

10. Ensure cab is in safe operating condition. Keep nuts, bolts and screws tight.

11. Replace a damaged cab. Do not repair or revise. Any alterations to cab must be approved by manufacturer.

12. If cab is removed from vehicle, reinstall ROPS before vehicle use.

13. To be sure of optimum performance and safety, always purchase genuine TORO replacement parts and accessories. Replacement parts and accessories made by other manufacturers could be dangerous. Such use could void the product warranty of The Toro Company.

© The TORO Company –2001

SAFETY AND INSTRUCTION DECALS

The following decals are to be installed on the cab. If any become damaged or illegible, replace them. The decal part number is listed below and in your parts catalog. Replacement decals can be ordered from your Authorized Toro Distributor.



ON LOWER FRONT SUPPORT
(Part No. 94–5274)



ON INSIDE OF REAR PANEL ABOVE BED SUPPORT
(Part No. 87–7930)

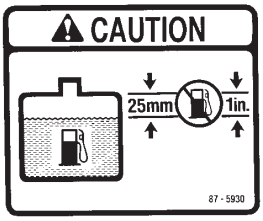

OUTSIDE CAB NEAR FUEL CAP
(Part No. 87–5930)



ON LEFT DOOR
FRAME INSIDE CAB
(Part No. 94–5276)

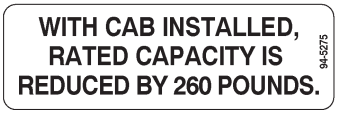

ON RIGHT DOOR
FRAME INSIDE CAB
(Part No. 94–5275)



ON RIGHT & LEFT
DOOR FRAMES IN-
SIDE CAB (2)
(Part No. 87–5980)

SPECIFICATIONS

CAB KITS

Application: Cab enclosure to shelter operator and passenger from weather dust and noise. Complete enclosure is only obtained when an optional door kit is installed.

Description: Structure surrounding passenger and operator. includes front and rear windows, two side mirrors, windscreen wiper, seat belts and hinge brackets for quick attachment (no tools) of optional doors.

Location: Mounts to rops receiver brackets after ROPS and seat back frame are removed.

Capacity: Workman vehicle payload is reduced by 260 lbs when cab is installed.

Construction: Welded formed steel sides, aluminum roof, front and rear windows; green tinted, single−pane toughened safety glass.

Controls: Wiper motor switch with indicator lamp

Adjustments: Swing away force for mirror

Features: Front window push−out for ventilation, coat hook, cup holder, windscreen wiper, sun visor, seat belts. the cab is certified as Toro two post rops.

Mounting: Attaches to rops receiver brackets and is bolted through foot platform and is bolted to front cowl.

Dimensions:

Length	1.26 m
Height from ground level	1.85 m
Width	1.38 m

Required Options: Glass door kit, Model 07251 or Soft door kit, Model 07250.

Weight Distribution:

Doors Mounted	Front Axle Weight	Rear Axle Weight	Total Weight
Soft Doors	215 lb.	−33 lb.	182 lb.
Glass Doors	310 lb.	−52 lb.	258 lb.

GLASS DOOR KITS

Application: Glass doors with lock to provide enclosure with cab model 07249.

Description: Safety glass doors set in a metal frame that can be locked and driver side has a sliding portion for opening.

Location: Mounts to cab quick attach hinge

Weight: Glass doors equal 98 lb.

Construction: Profile formed steel frame weldment with single pane toughened safety glass. sliding unit uses extruded aluminum guides.

Controls: Both doors lock (drivers side has keyed lock) drivers side door has sliding unit within door.

Adjustments: Striker pin for door handle latch.

Features: Left side door has key lock and sliding window. right side door locks, no key or no sliding unit. cab are is secure when doors are locked.

Mounting: Mounts to cab quick attach hinge.

SOFT DOOR KIT

Application: Lightweight, flexible doors to provide enclosure with cab model 07249.

Description: Flexible vinyl doors bound to a wire frame to slide into cab quick attach hinge.

Location: Mounts to cab quick attach hinge.

Weight: Vinyl doors equal 19 lb.

Construction: Wire frame wrapped with black vinyl and clear plastic window.

Features: Lightweight.

Mounting: Mounts to cab quick attach hinge.

SET–UP INSTRUCTIONS

The cab is designed to be used only with a Workman Vehicle and all new decals must be installed.

Important: If a Toro Cab heater is to be installed, mount heater engine coolant lines before installing cab to vehicle.

1. Position vehicle on a clean, level surface, stop engine, engage parking brake and remove key from ignition switch. Disconnect positive cable from battery.

Use steps 2 thru 13 when installing a cab on a vehicle with a serial number of 210000001 or prior.

2. If vehicle is equipped with ROPS, remove capscrews and locknuts securing each side of ROPS to mounting brackets. Remove ROPS.

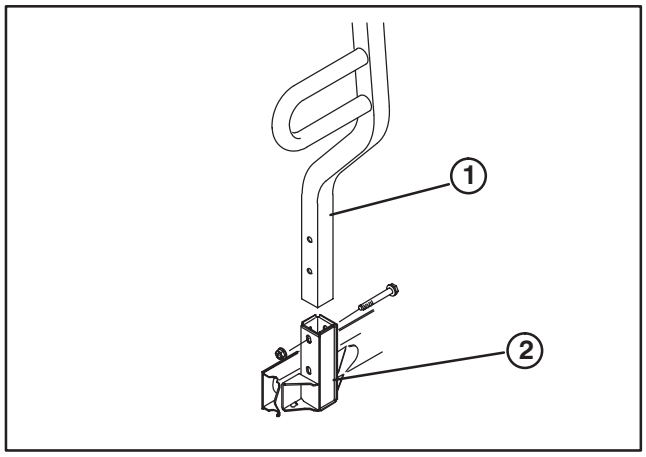

Figure 1
1. **ROPS**
2. **Mounting brackets**

3. Remove (2) capscrews and locknuts securing front legs of seat frame to sides of vehicle floor (Fig. 2).

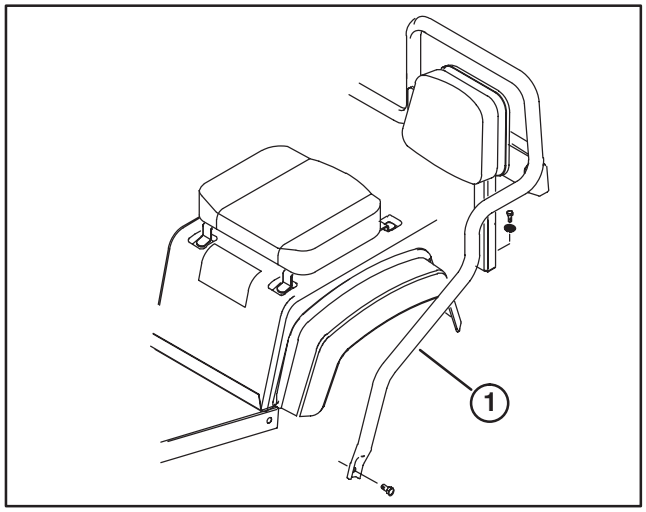

Figure 2
1. **Seat frame**

4. Remove (2) capscrews and lockwashers securing seat frame brackets to vehicle frame (Fig. 2). Remove seat frame assembly.

IMPORTANT: Retain seat back frame, ROPS and fasteners for re–installation should cab ever be removed.

5. Remove (4) 1/4–20 x 3/4" lg. capscrews and 1/4" flat washers securing (2) seat back brackets to each seat back cushion (Fig. 4). Retain cushions and fasteners.

6. Slide bed support off storage stud (Fig. 3). Retain bed support.

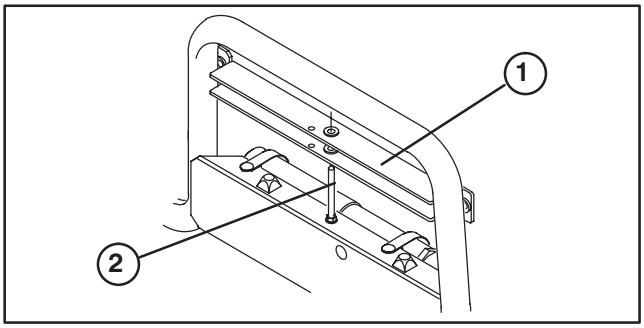

Figure 3
1. **Bed support**
2. **Storage stud**

7. Slide manual tube out of R–clamps.

8. Remove (4) 5/16–18 x 5/8" lg. carriage bolts and flange locknuts securing left seat back cushion brackets and manual tube R–clamps to seat back. Retain manual tube, R–clamps and fasteners.

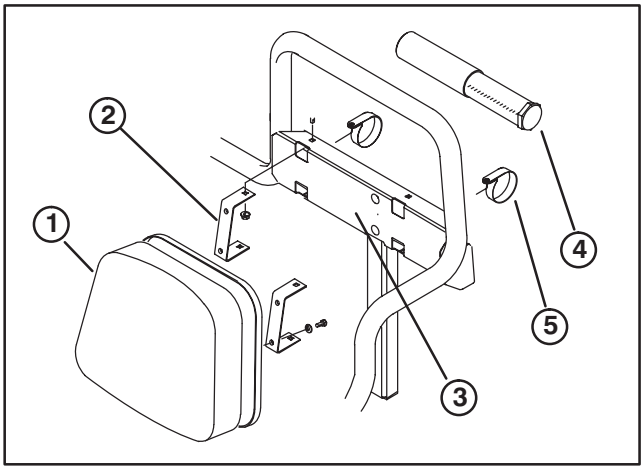

Figure 4
1. **Cushion seat back**
2. **Seat back bracket**
3. **Seat back**
4. **Manual tube**
5. **R–clamp**

9. Mount (2) new seat brackets to each seat back cushion with (4) 1/4–20 x 3/4" lg. capscrews and 1/4" flat washers previously removed (Fig. 5).

SET–UP INSTRUCTIONS

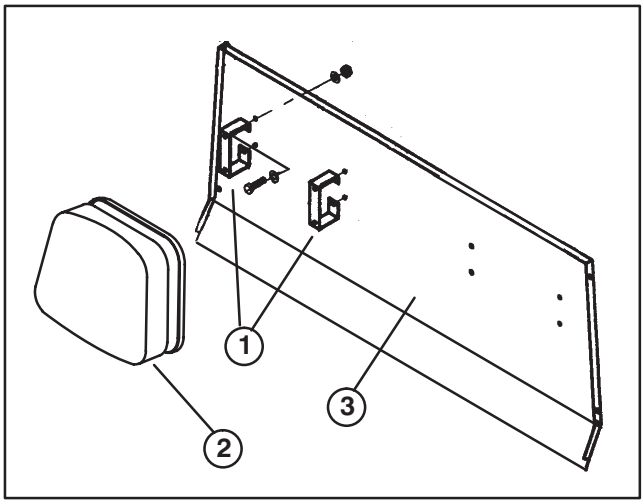

Figure 5
1. **Seat back cushion**
2. **Seat brackets**
3. **Rear panel**

10. Mount each set of seat brackets w/cushions to rear panel with (4) M6 x 16mm capscrews, (6) washers and nuts. Position components as shown in figure 5.

11. Loosen knobs securing radiator cover to radiator base and slide cover off (Fig. 6).

12. Remove (2) screws securing handle to cover and remove handle (Fig. 6).

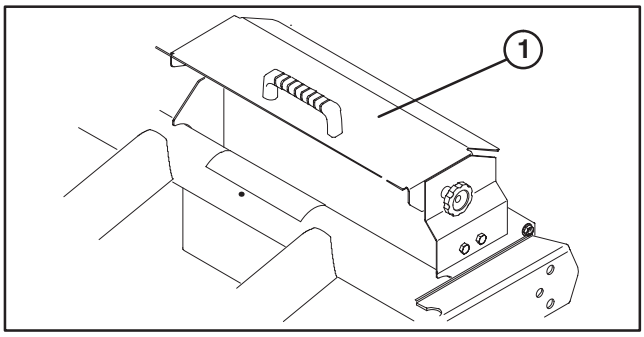

Figure 6
1. **Radiator Cover**

13. Install handle to new radiator cover with screw removed, install cover on radiator and tighten knobs.

Use steps 14 thru 21 when installing a cab on a vehicle with a serial number of 220000001 or higher.

14. If vehicle is equipped with ROPS, remove capscrews and locknuts securing each side of ROPS to mounting brackets (Fig. 7). Remove ROPS and back panel.

IMPORTANT: Retain ROPS and fasteners for re–installation should cab ever be removed.

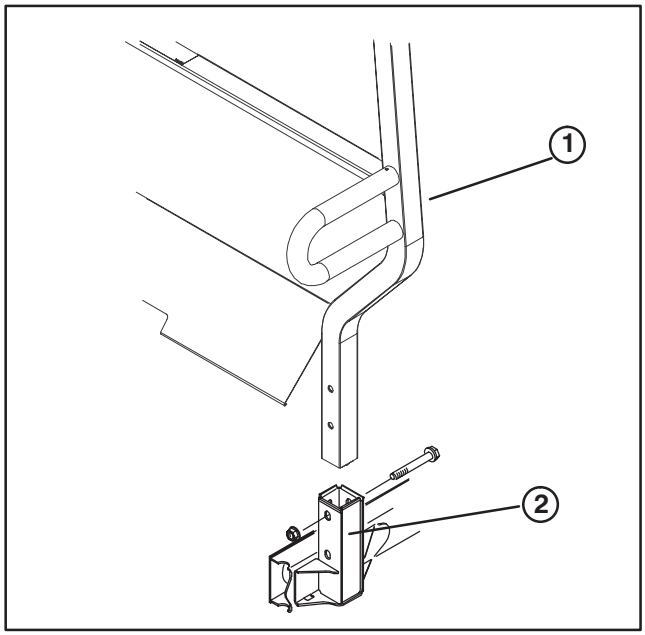

Figure 7
1. **ROPS**
2. **Mounting brackets**

15. Remove bed support from storage compartment on ROPS back panel (Fig. 8). Retain bed support.

16. Slide manual tube out of R–clamps (Fig. 8).

17. Remove carriage bolts and nuts securing manual tube R–clamps to back panel (Fig. 8). Retain manual tube, R–clamps and fasteners.

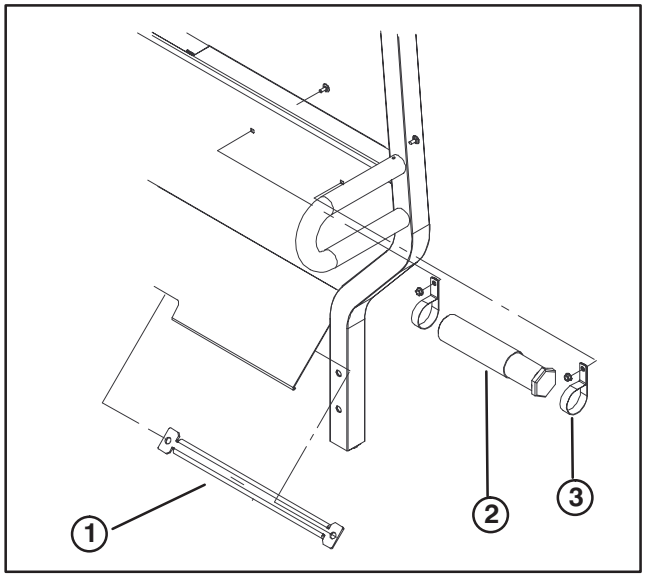

Figure 8
1. **Bed support**
2. **Manual tube**
3. **R–clamp (2)**

18. Remove capscrews (4 for each seat) securing seat brackets to vehicle body (Fig. 9). Remove both seats.

SET–UP INSTRUCTIONS

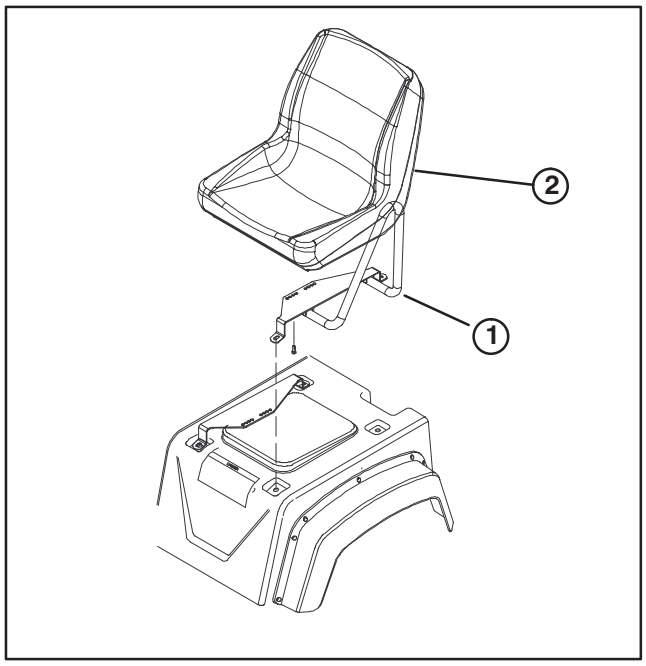

Figure 9
1. Seat bracket
2. Seat

19. Remove (2) capscrews securing outside seat bracket w/hip restraint to seat (Fig. 9).

IMPORTANT: Retain seat bracket for re–installation should cab ever be removed.

20. Mount a new seat bracket to each seat with capscrews removed (Fig. 10).

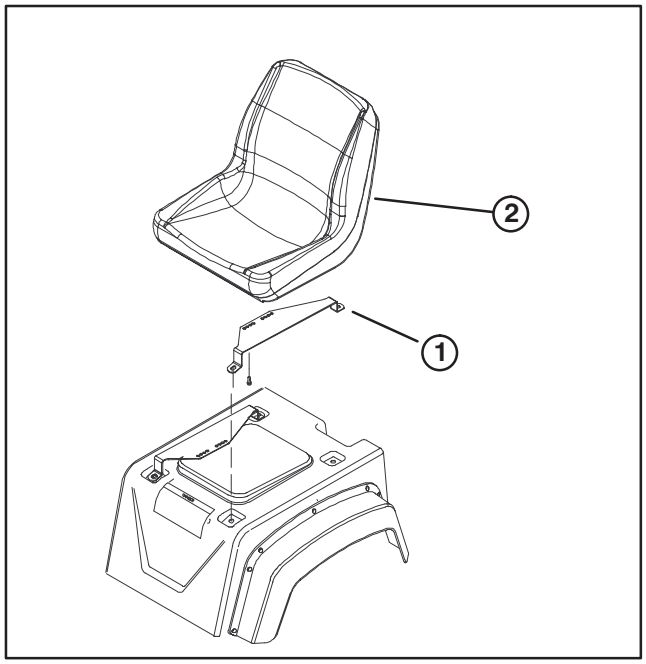

Figure 10
1. New seat bracket
2. Seat

21. Secure seat brackets to vehicle body with capscrews (4 for each seat) previously removed (Fig. 10).

22. Remove fasteners securing radiator overflow reservoir to rear of skirt. Insert spacers onto screws, between skirt and reservoir mounting tabs and re–mount reservoir to skirt.

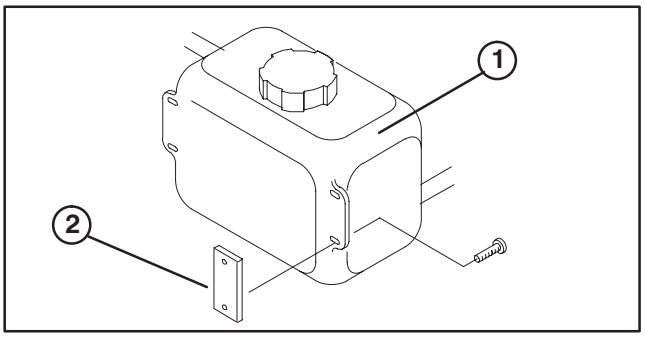

Figure 11
1. Radiator overflow reservoir
2. Spacer

23. Remove (5) screws securing trim bracket to top of hood (Fig. 12).

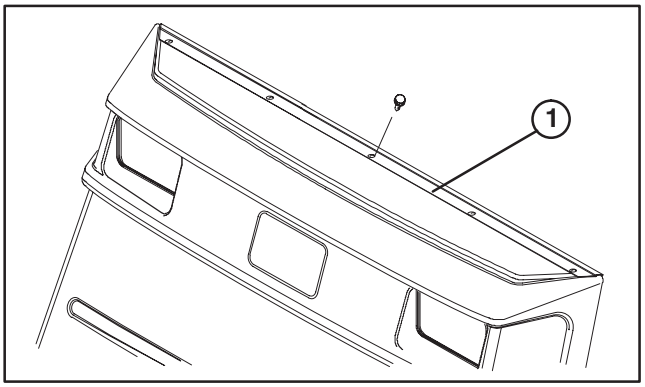

Figure 12
1. Hood trim

24. Loosely secure each end of front and rear upper supports to right and left side door frames with (2) M10 x 60 mm capscrews, (4) washers and nuts. Washers to be positioned to the outside of mating parts. Position components as shown in figure 13. Make sure wire harness from top of left side door frame is routed over upper support toward inside of cab.

25. Loosely secure each end of lower front support to front of side door frames with (2) M6 x 16 mm capscrews, (4) washers and nuts. Washers to be positioned to the outside of mating parts. Position components as shown in figure 13.

26. Loosely secure left, front cover shield to left door frame with (3) M8 x 45mm screws, washers and nuts. Position components as shown in figure 13.

27. Loosely secure top of left, front cover shield to lower front support a M8 x 20mm capscrew, washer and nut. Position components as shown in figure 13.

SET—UP INSTRUCTIONS

28. Repeat steps 26 & 27 on right, front cover shield.

29. Loosely secure rear panel to rear of side door frames with (6) M8 x 45mm capscrews, (12) washers and nuts. Position components as shown in figure 13.

30. Press on weather—strip seal to bottom edges of rear panel and lower front support and inside edges of right and left front cover shields.

31. Lift cab onto vehicle while guiding rear corner brackets onto the vehicle ROPS receiver brackets. (Fig. 14). Make sure wire harness from bottom of left side door frame is routed to inside of cab.

IMPORTANT: Cab is very heavy. Use a hoist or fork lift with a lift capacity of 400 lbs.

32. Loosely secure right rear corner of cab to ROPS receiver with a M12 x 35mm capscrew, (2) washers and nut and with a M12 x 90mm capscrew, (2) washers and nut.

33. Adjust cab on vehicle body so bottom of each door frame is aligned with edge of vehicle floor.

34. Using bottom of door frame as a template, locate, mark and drill (3) .438" dia. holes (per side) in vehicle floor.

35. Secure bottom of each door frame to vehicle floor with (3) M12 x 35mm capscrews, (2) washers and nuts (Fig. 13). Tighten fasteners securely.

36. Loosely secure each outer hole of lower front support to trim bracket and hood with a 1/4—20 x 1" lg. capscrew.

37. Loosely secure remaining holes of lower front support to trim bracket and hood with (3) M8 x 25mm capscrews and nuts.

Note: Remove glove box to ease installation of lower front support to trim bracket and hood.

38. Tighten all cab mounting fasteners. Insert appropriate size cap onto all mounting nuts inside cab.

39. Insert (2) plugs into capscrew holes in upper rear corners of each side door frame.

40. Route lower end of cab wire harness, from bottom of left side door frame, under dash to fuse block. Harness must not interfere with operation of brake pedal return spring or any moving parts. Secure harness to vehicle wire harness with (2) cable ties.

41. Connect cab wire harness to vehicle as follows:

A. Connect harness wire with in—line fuse to red wire from vehicle fuse block

B. Remove capscrew and nut securing vehicle ground wires to frame. Re—secure brown wire with ring terminal and vehicle wires to frame with capscrew and nut removed.

42. Press on weather—strip (longer length seal) seal onto inside edges of upper and lower front supports and left and right door frames.

Note: When installing weather—strip, start in the middle of the lower front support, affix to all edges, cut to proper length and secure ends together with a weather—strip joiner.

SET–UP INSTRUCTIONS

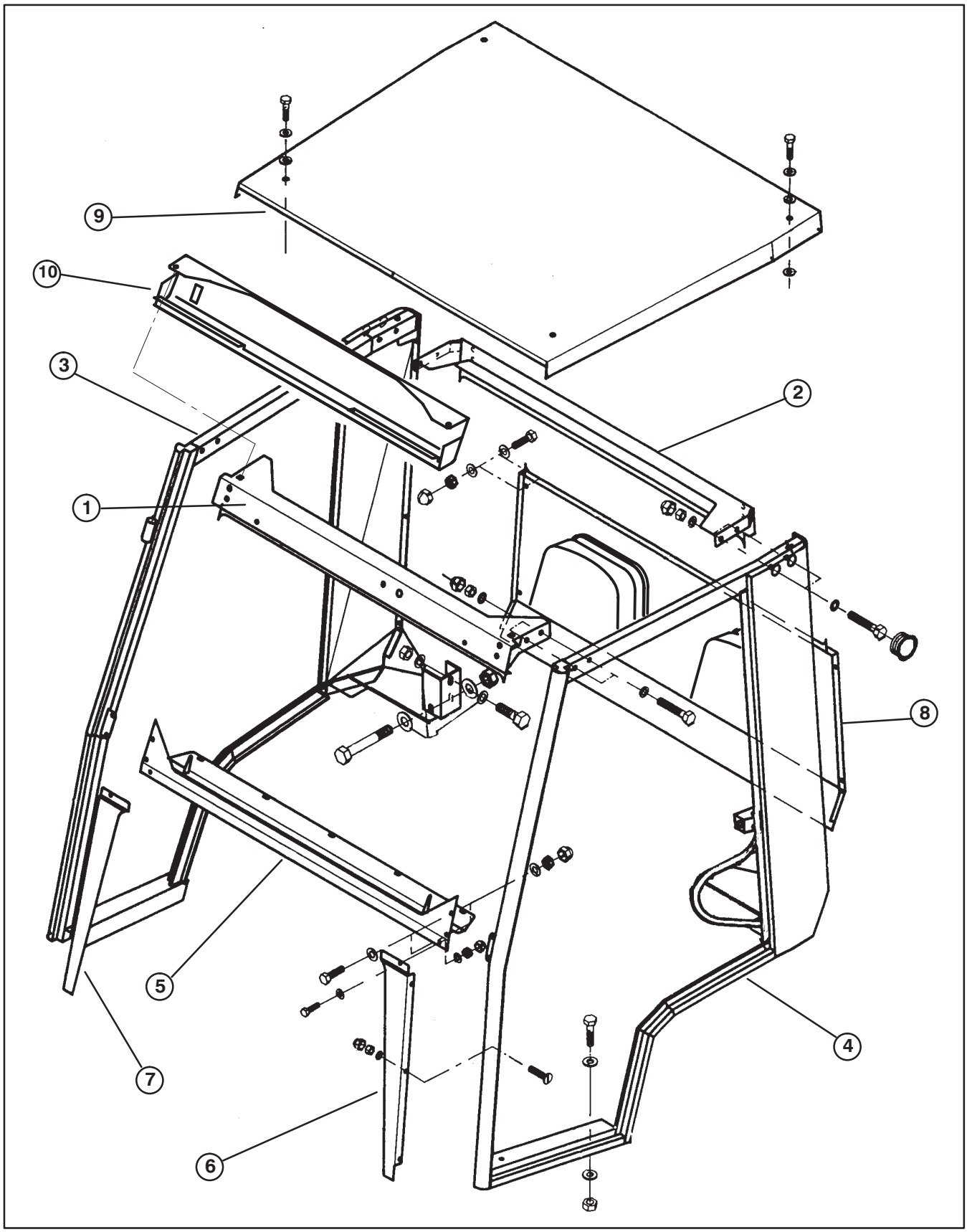

Figure 13

1. Front upper support
2. Rear upper support
3. Side door frame (R.H.)
4. Side door frame (L.H.)
5. Front lower support
6. Front cover shield (L.H.)
7. Front cover shield (R.H.)
8. Rear panel
9. Roof
10. Wiper motor cover

SET–UP INSTRUCTIONS

43. Loosely install a hinge to each of the top holes in front window with a screw and (2) washers (Fig. 14).

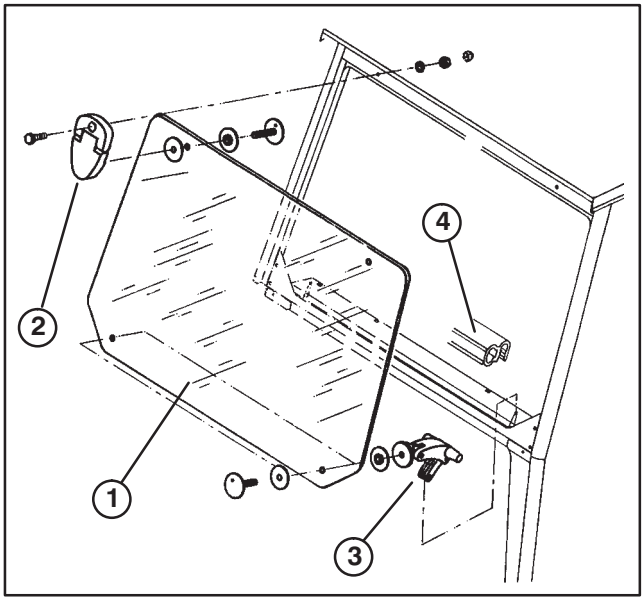

Figure 14
1. **Front window**
2. **Hinge**
3. **Push–out crank**
4. **Weather–strip seal**

44. Loosely install a push–out crank to each of the bottom holes in front window with a screw and (2) washers (Fig. 14).

45. Insert window onto weather–strip seal of front opening, while aligning hinge mounting holes with holes in upper front support (Fig. 14). Tighten hinge mounting screws finger tight.

46. Secure each hinge to support with a plastic capscrew, washer and nut. Install a cap over each nut (Fig. 14).

47. Secure each push–out crank to supports with a plastic pin.

48. Press on weather–strip (shorter length seal) seal onto inside edges of rear support, rear panel and left and right door frames.

Note: When installing weather–strip seal, start in the middle of the rear panel, affix to all edges, cut to proper length and secure ends together with a weather–strip joiner.

49. Loosely install a glass fastener to each hole in rear window with a screw and (2) washers (Fig. 15). Fasteners to mounted with the hook to the inside.

50. Insert window onto weather–strip seal of rear opening. Rotate fastener hooks over weather–strip seal and tighten screw finger tight (Fig. 15).

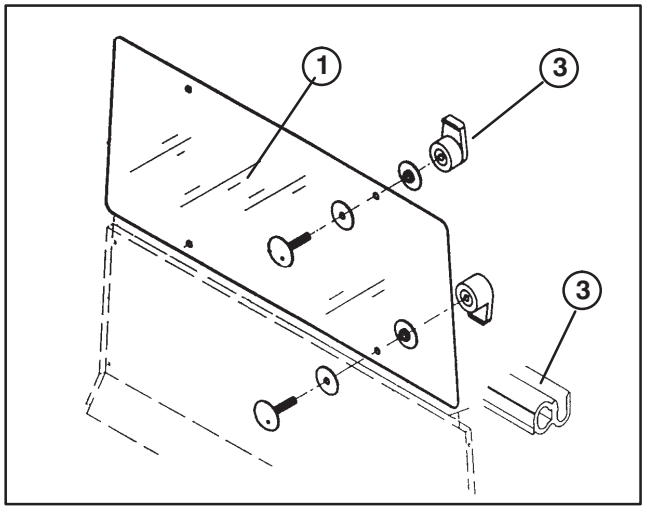

Figure 15
1. **Rear window**
2. **Glass fastener**
3. **Weather–strip seal**

51. Insert wiper blade assembly onto wiper motor shaft and secure with nut.

52. Plug wire harness into switch connectors on wiper motor cover.

53. Install manual tube to wiper motor cover with R–clamps and fasteners previously removed.

54. Position wiper motor cover w/visor over wiper motor while aligning mounting holes with holes in front top support.

55. Position roof onto cab frame aligning mounting holes with holes in front and rear supports and wiper motor cover (Fig. 13). Make sure wire harness is not pinched but only compressed by roof head liner foam.

56. Secure roof and wiper motor cover to front support with (2) M8 x 35mm capscrews, washers and washer seals (Fig. 13).

57. Secure roof to rear support with (2) M8 x 55mm capscrews, washers and washer seals (Fig. 13).

58. Insert right mirror support into mounting tube on right side frame and secure with a spring washer and nut (Fig. 16). Tighten nut only enough to allow rotation of mirror.

SET–UP INSTRUCTIONS

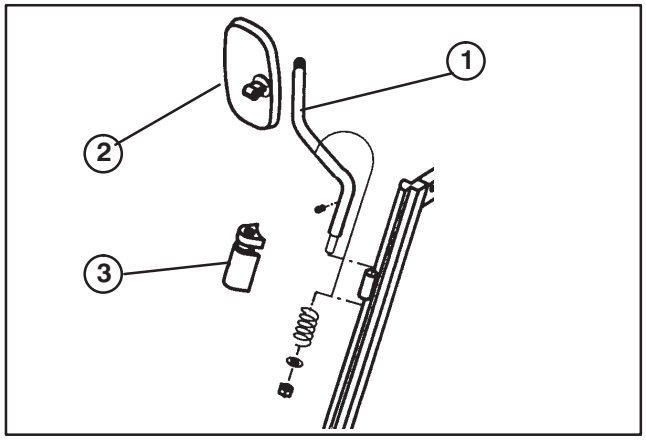

Figure 16
1. **Mirror support**
2. **Mirror**
3. **Cover**

59. Attach mirror to mirror support (Fig. 16).

60. Snap cover over fasteners (Fig. 16).

61. Install seat belts as follows:

A. Remove capscrews and washers securing rear of seat brackets to frame of machine.

B Secure each end of seat belt assembly to seat belt bracket as shown in figure 1, with a 7/16–20 x 1" lg. capscrew and locknut. Bent tabs on bracket to face forward and seat belt latch to be mounted on end of bracket positioned toward outside of machine. Tighten nuts securely.

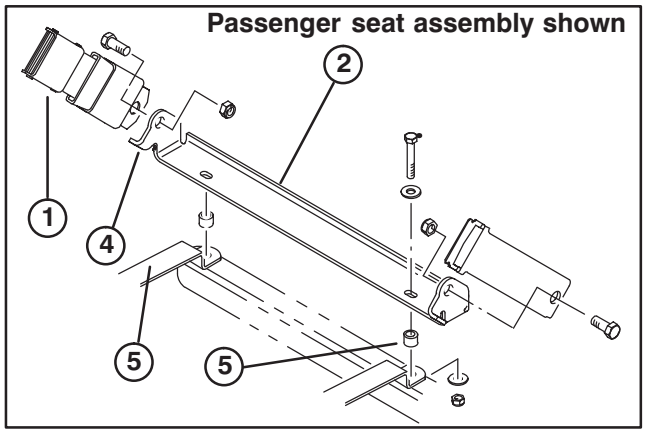

Figure 17
1. **Seat belt latch**
2. **Seat belt bracket**
3. **Seat brackets**
4. **Bent tab**
5. **Spacer**

C. Mount seat belt bracket to seat brackets and frame with (2) 5/16–18 x 2" lg. capscrews, washers and spacers. Spacers to be positioned between seat belt bracket and seat brackets.

D. Secure assembly to underside of frame with (2) washers and locknuts. Tighten nuts securely.

62. Insert bed support into storage brackets on rear panel.

63. Install the following decals at locations specified:

- 94–5274–Affix to lower front support.
- 94–5275–Affix to inside of upper right hand cab wall.
- 94–5276–Affix to inside of upper left hand cab wall.
- 87–7930–Affix to rear panel above bed support.
- 87–5980 (2)–Affix to inside of upper right and left hand cab walls.
- 87–5930–Affix to outside of rear panel near fuel cap.
- 67–1300 (2)–Affix to outside of upper right and left hand cab walls.

INSTALL OPTIONAL SOFT DOORS Model 07250

1. Lift door (right or left) and install hinge pins into hinge receptacles on appropriate cab side frame (Fig. 18).

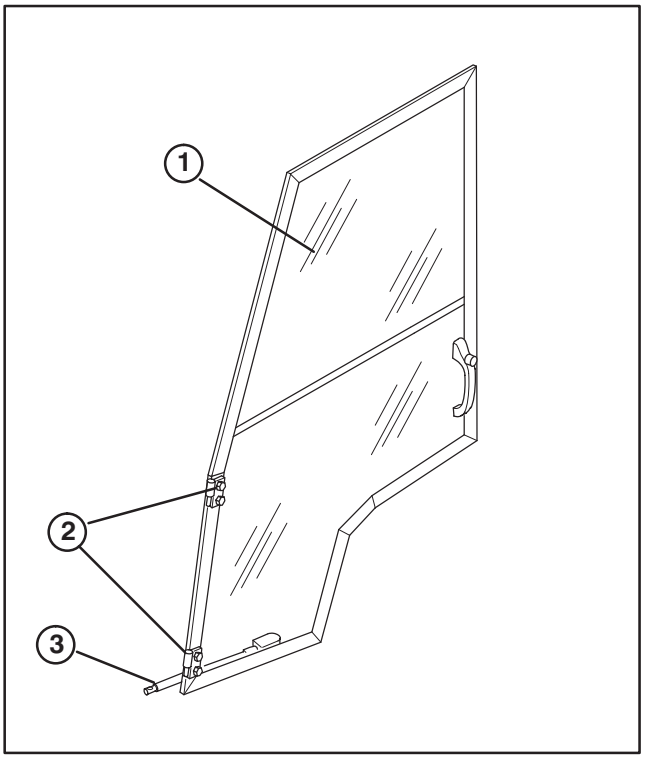

Figure 18
1. **Door (Glass door shown)**
2. **Hinge pin**
3. **Spring assembly rod**

2. Shut door and rotate handle knob to latch door.

SET–UP INSTRUCTIONS

INSTALL OPTIONAL GLASS DOORS
Model 07251/07226/07267

1. Lift door (right or left) and install hinge pins into hinge receptacles on appropriate cab side frame (Fig. 18).

2. Install door latch striker to each door frame with a washer(s) and jam nut (Fig. 19).

3. Insert rod end of door spring assembly between bracket tabs on cab side frame (Fig. 18).

4. Secure rod to bracket with spring loaded curved pin.

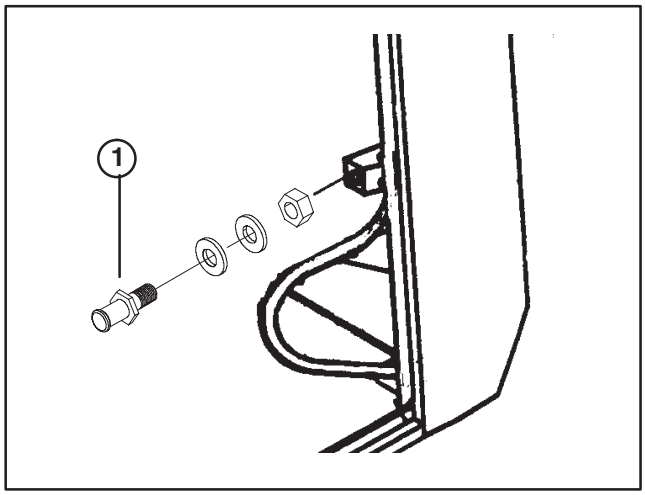

Figure 19
1. Door latch striker

OPERATING INSTRUCTIONS

When the TORO WORKMAN® is equipped with this cab enclosure it meets Toro ROPS certification. The combination of the cab and seat belts will reduce the risk of serious or fatal injury in the unlikely event of a tipover, although the system cannot protect the operator from all possible injuries.



TIPOVER CAN OCCUR IF TRUCK IS IMPROPERLY OPERATED. INJURY OR DEATH COULD RESULT

The best way to prevent accidents involving utility vehicles is through continuous supervision and training of operators and paying constant attention to the area in which vehicle is being operated.

The best way for operators to prevent serious injury or death to themselves or others, is to familiarize themselves with the proper operation of the utility vehicle, to stay alert and to avoid actions or conditions which could result in a accident. In the event of a tip over, the risk of serious injury or death will be reduced if the operator is using the cab and seat belts and follows the instructions in the Workman Vehicle Operator's Manual.

To avoid tipover, operate vehicle only if equipped with dump box or other rear attachment weighing at least 200 lbs.

Avoid sudden stops and sharp turns.

Always use safety belts.

Never allow riders on cab at any time.

Ensure cab is in safe operating condition. Keep nuts, bolts and screws tight.

Replace a damaged cab. Do not repair or revise. Any alterations to cab must be approved by manufacturer.

If cab is removed from vehicle, reinstall ROPS before vehicle use.


TORO®