Form No. 3453-614 Rev C

Roll-Over Protection System Kit

TimeCutter® HD or Titan® Zero-Turn-Radius Riding Mower

Model No. 139-2638

Installation Instructions

Store this document with the *Operator's Manual* for the traction unit.

Safety

Rollover Protection System (ROPS) Safety

- The ROPS is an integral safety device. Do not remove any of the ROPS components from the machine.
- Ensure that the seat belt is attached and that you can release it quickly in an emergency.
- Keep the roll bar in the fully raised and locked position and always wear your seat belt whenever the roll bar is up.
- Check carefully for overhead objects before you drive under them, and do not contact them.
- Replace damaged ROPS components. Do not repair or alter them.
- There is no rollover protection when the roll bar is down.
- Wheels dropping over edges, over steep banks, or into water can cause a rollover, which may result in serious injury or death.
- Do not wear the seat belt when the roll bar is down.
- Lower the roll bar only when absolutely necessary; raise it as soon as clearance permits.
- In the event of a rollover, take the machine to an Authorized Service Dealer to inspect the ROPS.
- Use only Toro approved accessories and attachments for the ROPS.

Safety and Instructional Decals

Safety decals and instructions are easily visible to the operator and are located near any area of potential danger. Replace any decal that is damaged or missing.

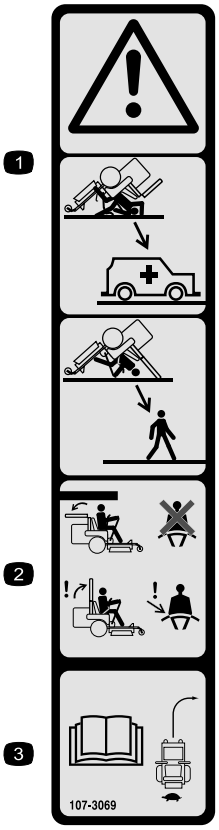

decal107-3069

107-3069

1. Warning–there is no rollover protection when the roll bar is down.
2. To avoid injury or death from a rollover accident, keep the roll bar in the raised and locked position and wear the seat belt. Lower the roll bar only when absolutely necessary; do not wear the seat belt when the roll bar is down.
3. Read the *Operator's Manual*; drive slowly and carefully.

© 2022—The Toro® Company
8111 Lyndale Avenue South
Bloomington, MN 55420

Register at www.Toro.com.

Original Instructions (EN)
Printed in the USA
All Rights Reserved

3453-614

Installation

Loose Parts

Use the chart below to verify that all parts have been shipped.

Procedure	Description	Qty.	Use
1	No parts required	–	Prepare the machine.
2	Weight Plate Carriage bolt (3/8 x 2 inches) Nut (3/8 inch)	5 1 2 2	Install the weights (machines with both 48in deck and bagger installed only).
3	Left lower roll bar Right lower roll bar Bolt (1/2 x 4 inches) Washer Locknut (1/2 inch) Left support bracket Right support bracket Bolt (1/2 x 1-1/4 inches) Bolt (1/2 x 1-3/4 inches)	1 1 4 6 6 1 1 2 2	Install the lower tubes and seat belt.
4	Left seat-belt bracket—Machines without MyRide only Right seat-belt bracket—Machines without MyRide only Seat-belt assembly Seat-belt buckle Bolt (1/2 x 1-1/4 inches) Locknut (1/2 inch) Self-tapping screw (1/4 x 5/8 inch) Bolt (7/16 x 1-1/4 inches)—Machines with MyRide only	1 1 1 1 4 4 2 2	Install the seat belt.
5	Roll bar Side plate Bolt (1/2 x 3 inches) Flat spacer Washer Locknut (1/2 inch) Bumper Cylindrical spacer Lanyard with pivot pin, washer, and hairpin cotter	1 4 8 4 6 8 3 4 1	Install the roll bar.

Determine the left and right sides of the machine from the normal operating position.

1

Preparing the Machine

No Parts Required

Procedure

1. Park the machine on a level surface.
2. Disengage the PTO, engage the parking brake, and move the motion-control levers outward to the NEUTRAL-LOCK position.
3. Shut off the engine and remove the key.

2

Installing the Weights

Machines with Both 48in Deck and Bagger Installed

Parts needed for this procedure:

5	Weight
1	Plate
2	Carriage bolt (3/8 x 2 inches)
2	Nut (3/8 inch)

Procedure

1. Remove the retaining rod and suitcase weight (Figure 1).

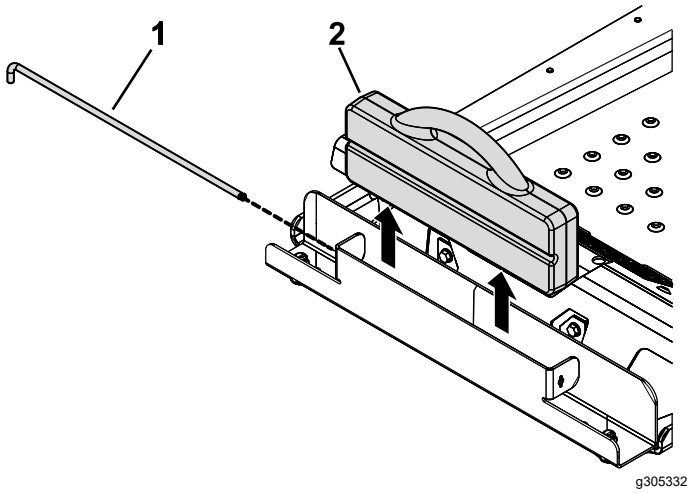

Figure 1

1. Retaining rod
2. Suitcase weight

2. Install the 5 weights under the weight tray (Figure 2).

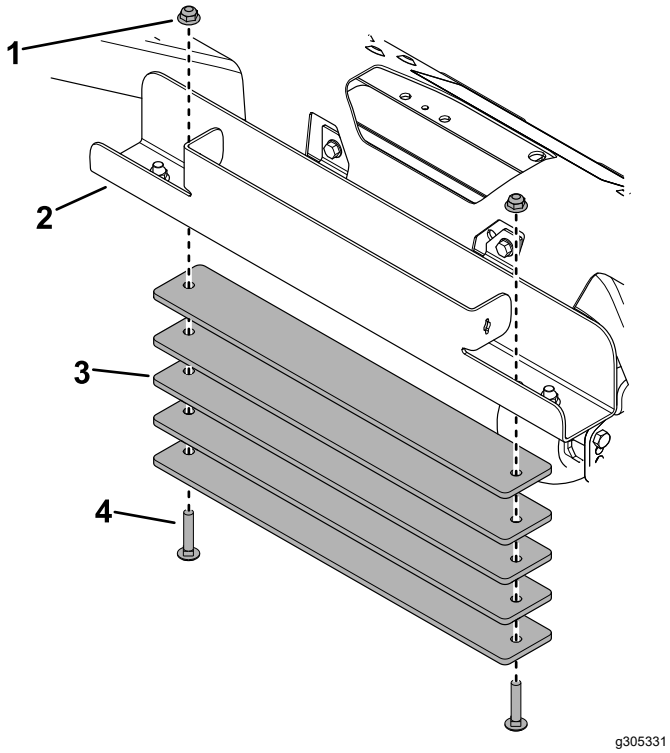

Figure 2

1. Nut (2)
2. Weight tray
3. Weight (5)
4. Carriage bolt (2)

3. Install the plate at the front of the weight tray (Figure 3).

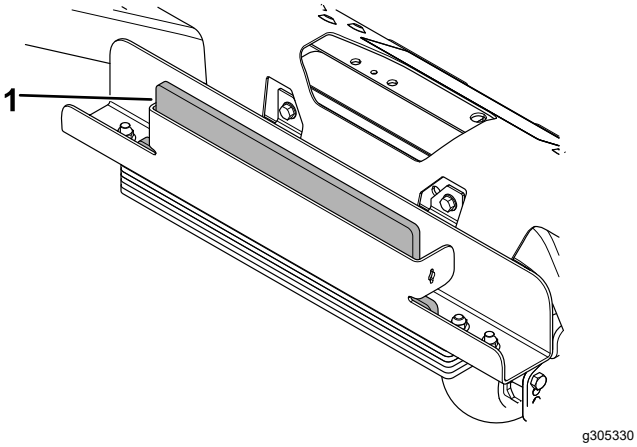

Figure 3

1. Plate

4. Install the suitcase weight behind the plate and install the retaining rod (Figure 1).

3

Installing the Lower Tubes and Seat Belt

Parts needed for this procedure:

1	Left lower roll bar
1	Right lower roll bar
4	Bolt (1/2 x 4 inches)
6	Washer
6	Locknut (1/2 inch)
1	Left support bracket
1	Right support bracket
2	Bolt (1/2 x 1-1/4 inches)
2	Bolt (1/2 x 1-3/4 inches)

Procedure

Note: The engine and left and right pods are not shown in the figures.

1. Raise and support the machine so that the rear wheels are off the ground.
2. Remove the rear wheels.
3. Loosely install the left and right lower roll bar tubes using 2 bolts (1/2 x 4 inches), 2 washers, and 2 locknuts (1/2 inch) for each tube (Figure 4).

   Note: Ensure that the battery cables route between the right pod and the right roll bar.

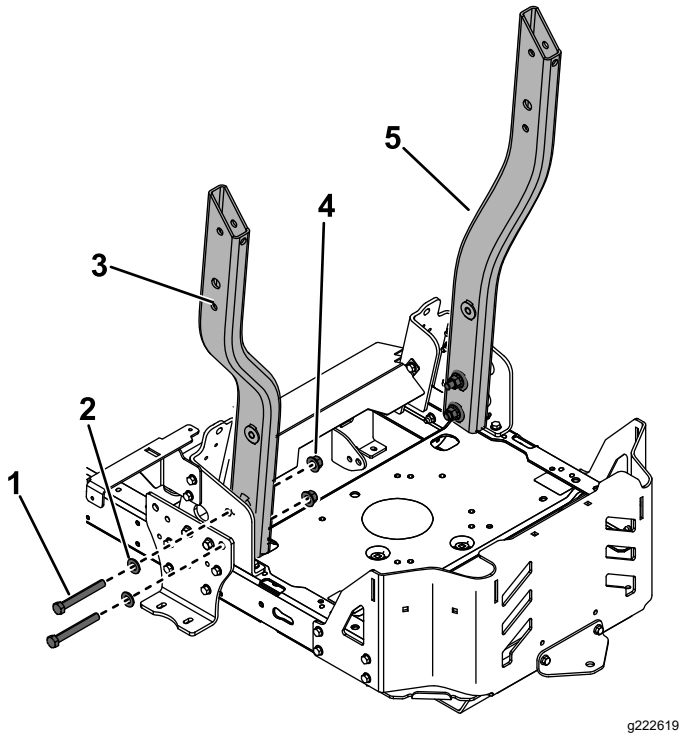

Figure 4

1. Bolt—1/2 x 4 inches (2)
2. Washer (2)
3. Left lower roll bar tubes
4. Locknut (1/2 inch)
5. Right lower roll bar (installed)

4. Loosely install the left and right support brackets using 1 bolt (1/2 x 1-1/4 inches), 1 locknut (1/2 inch), 1 bolt (1/2 x 1-3/4 inches), and 1 washer for each bracket (Figure 5).

   Note: Ensure that the battery ground cable routes under the right support bracket and other cables route above the right support bracket (Figure 6).

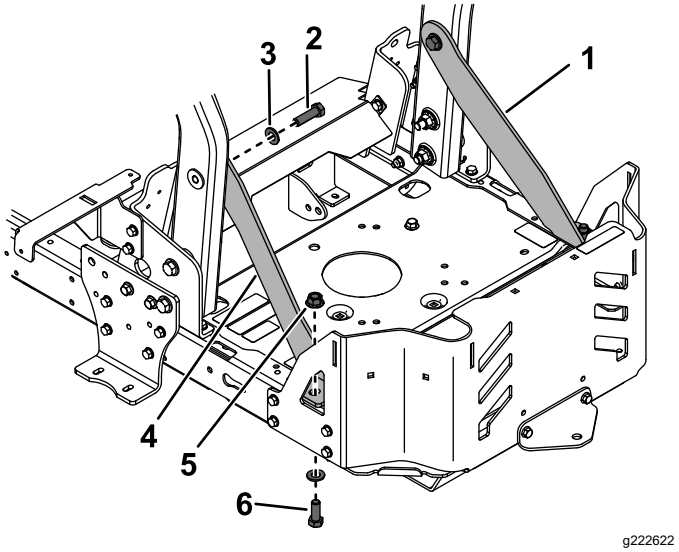

Figure 5

1. Right support bracket (installed)
2. Bolt (1/2 x 1-3/4 inches)
3. Washer (2)
4. Left support bracket
5. Locknut (1/2 inch)
6. Bolt (1/2 x 1-1/4 inches)

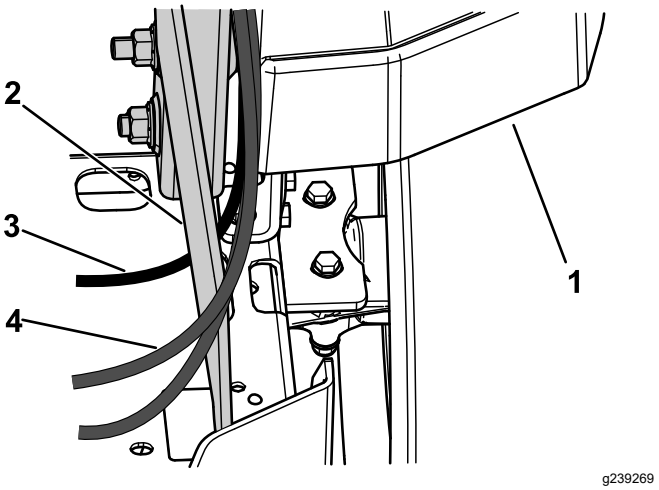

Figure 6

1. Right pod
2. Right support bracket
3. Battery ground cable
4. Cable

4

Installing the Seat Belt

Parts needed for this procedure:

1	Left seat-belt bracket—Machines without MyRide only
1	Right seat-belt bracket—Machines without MyRide only
1	Seat-belt assembly
1	Seat-belt buckle
4	Bolt (1/2 x 1-1/4 inches)
4	Locknut (1/2 inch)
2	Self-tapping screw (1/4 x 5/8 inch)
2	Bolt (7/16 x 1-1/4 inches)—Machines with MyRide only

Machines without MyRide

1. Install the left and right seat-belt brackets using 1 bolt (1/2 x 1-1/4 inches), 1 locknut (1/2 inch), and 1 self-tapping screw (1/4 x 5/8 inch) for each bracket (Figure 7). Torque the bolts to 102 N·m (75 ft-lb).

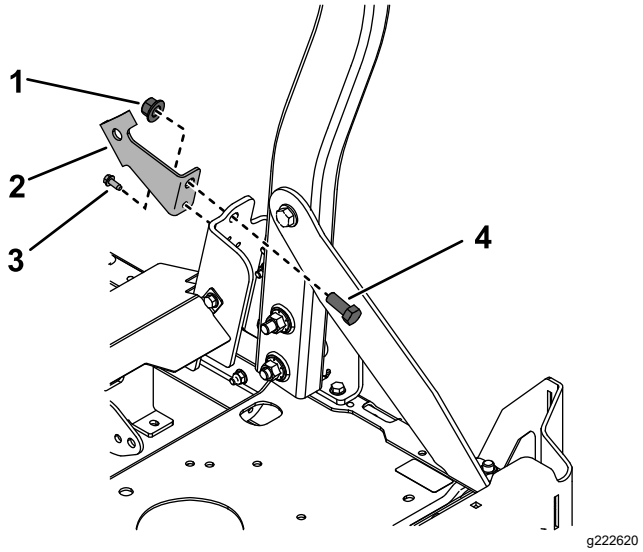

Figure 7

1. Locknut (1/2 inch)
2. Right seat-belt bracket
3. Self-tapping screw (1/4 x 5/8 inch)
4. Bolt (1/2 x 1-1/4 inches)

2. Install the seat-belt assembly and buckle to the brackets using 2 bolts (1/2 x 1-1/4 inches) and 2 locknuts (1/2 inch) as shown in Figure 8. Torque the bolts to 102 N·m (75 ft-lb).

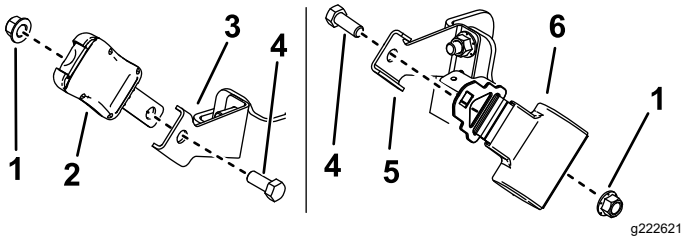

Figure 8

1. Locknut (1/2 inch)
2. Seat-belt buckle
3. Right seat-belt bracket
4. Bolt (1/2 x 1-1/4 inches)
5. Left seat-belt bracket
6. Seat-belt assembly

Machines with MyRide

Install the seat-belt assembly and buckle to the seat as shown in Figure 9.

- For seats with a welded nut, use 2 bolts (7/16 x 1-1/4 inches). Torque the bolts to 68 N·m (50 ft-lb).
- For seats without a welded nut, use 2 bolts (1/2 x 1-1/4 inches) and 2 locknuts (1/2 inch). Torque the bolts to 102 N·m (75 ft-lb).

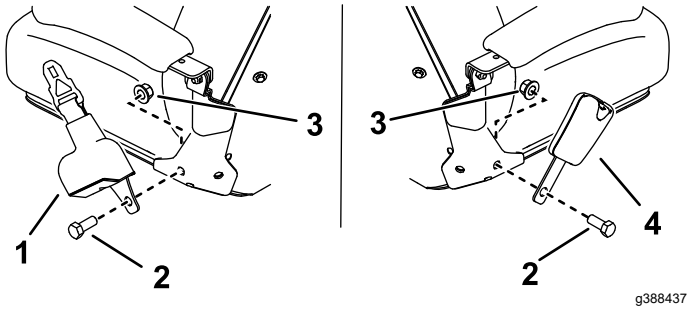

Figure 9

1. Seat-belt assembly
2. Bolt
3. Locknut (seats without welded nut only)
4. Seat-belt buckle

5

Installing the Roll Bar

Parts needed for this procedure:

1	Roll bar
4	Side plate
8	Bolt (1/2 x 3 inches)
4	Flat spacer
6	Washer
8	Locknut (1/2 inch)
3	Bumper
4	Cylindrical spacer
1	Lanyard with pivot pin, washer, and hairpin cotter

Procedure

Note: Leave the bolts loose enough so that the parts are free to shift around.

1. Install 2 side plates to both sides of the roll bar using 3 bolts (1/2 x 3 inches), 2 flat spacers, 3 washers, 1 cylindrical spacer, and 3 locknuts (1/2 inch) on each side (Figure 10).

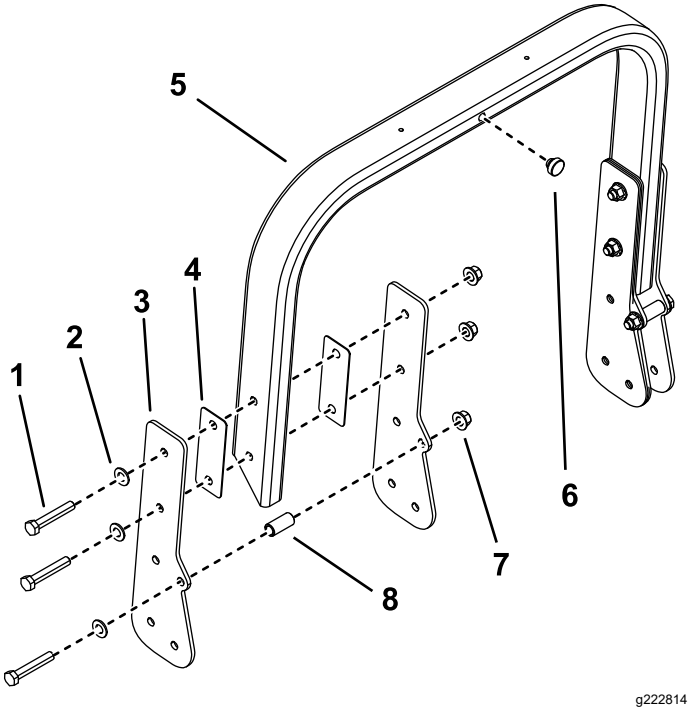

Figure 10

1. Bolt—1/2 x 3 inches (3)
2. Washer (3)
3. Side plate (2)
4. Flat spacer (2)
5. Roll bar
6. Bumper
7. Locknut—1/2 inch (3)
8. Cylindrical spacer

2. Install a bumper in the center of the roll bar (Figure 10).
3. Install a bumper and cylindrical spacer to both lower roll bar tubes (Figure 11).

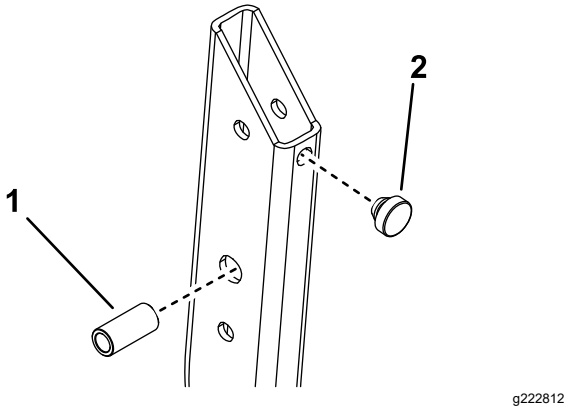

Figure 11

1. Cylindrical spacer
2. Bumper

4. With the assistance of a second person, attach the roll bar assembly and the lanyard washer to the lower roll bar tubes using a bolt (1/2 x 3 inches) and locknut (1/2 inch) on each tube (Figure 12).

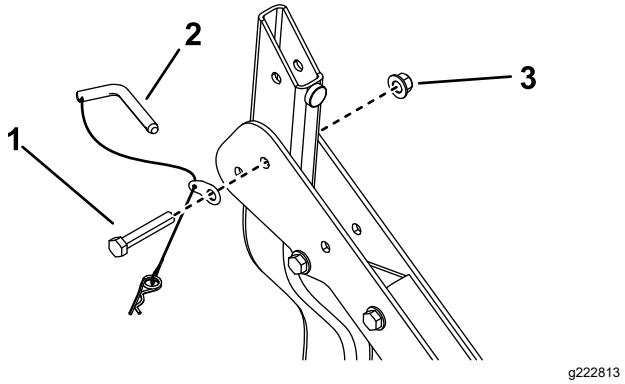

Figure 12

1. Bolt (1/2 x 3 inches)
2. Pivot pin
3. Locknut (1/2 inch)

5. Raise the roll bar into the upright position and lock it into place using the pivot pin and hairpin cotter on both sides of the roll bar (Figure 13).

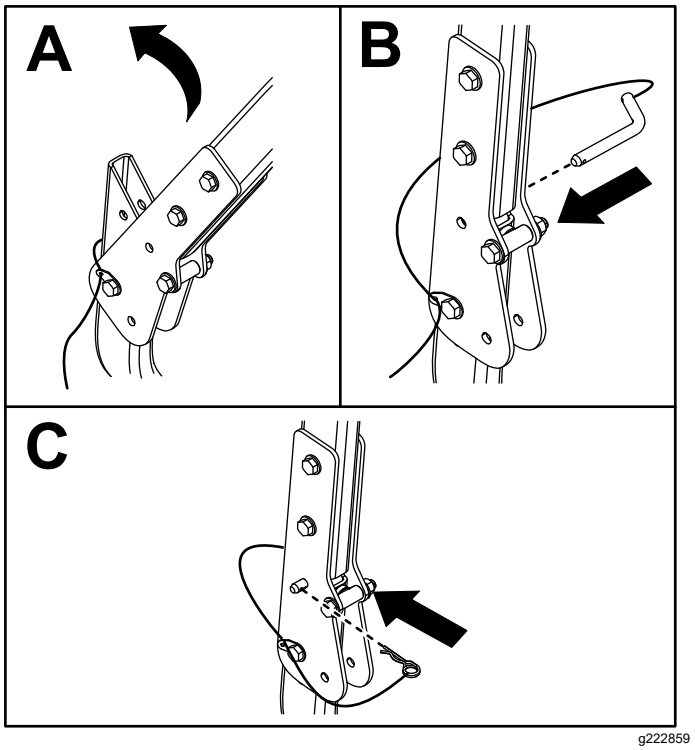

Figure 13

6. Torque all 1/2-inch bolts to 102 N·m (75 ft-lb).
7. Install the rear tires. Torque the lug nuts to 95 to 122 N·m (70 to 90 ft-lb).
8. Lower the machine to the ground.

Operation

Using the Rollover-Protection System

⚠ WARNING

To avoid injury or death from rollover: keep the roll bar in the fully raised, locked position and use the seat belt.

Ensure that the seat is secured to the machine.

⚠ WARNING

There is no rollover protection when the roll bar is in the down position.

- **Lower the roll bar only when absolutely necessary.**
- **Do not wear the seat belt when the roll bar is in the down position.**
- **Drive slowly and carefully.**
- **Raise the roll bar as soon as clearance permits.**
- **Check carefully for overhead clearances (i.e., branches, doorways, electrical wires) before driving under any objects, and do not contact them.**

Important: **Ensure that the seat is secured to the machine.**

Raising the Roll Bar

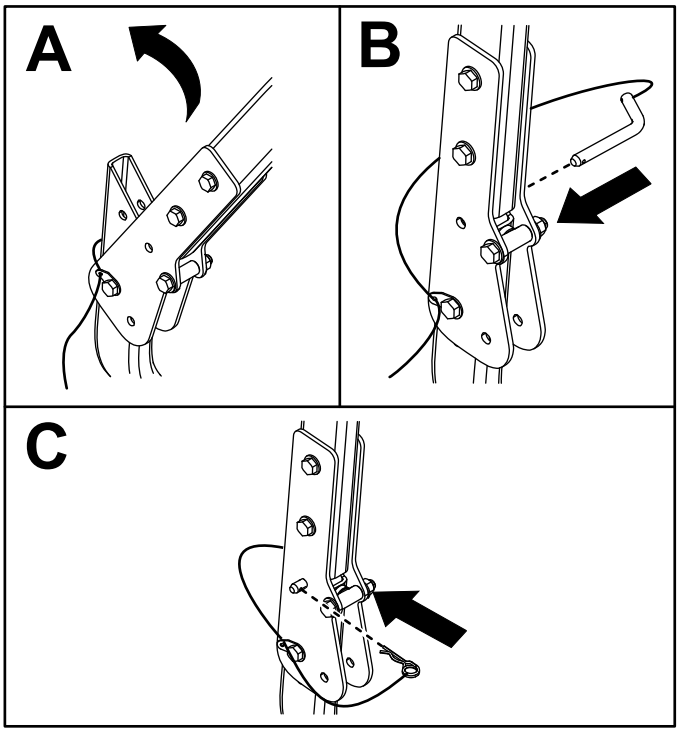

g222859

Figure 14

Lowering the Roll Bar

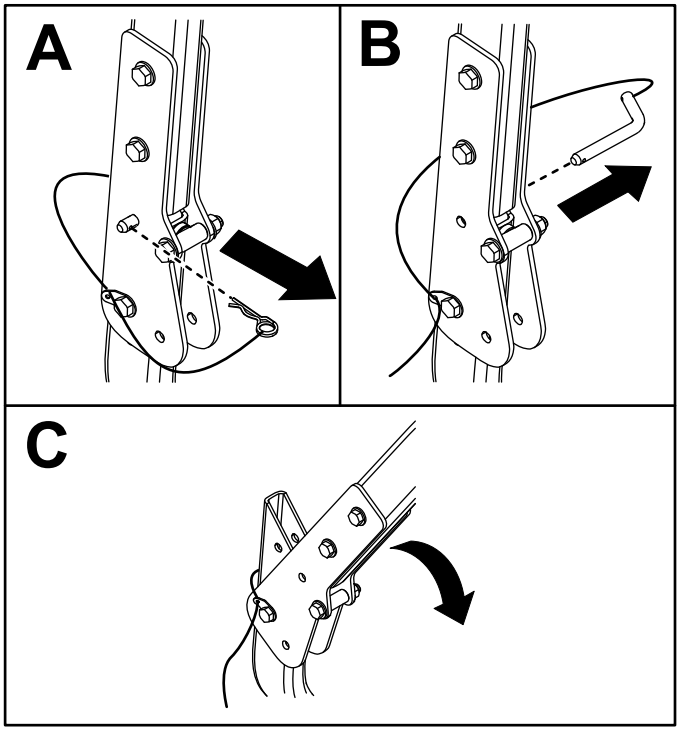

g222897

Figure 15

Maintenance

Checking the Seat Belt

Service Interval: Before each use or daily

Inspect the seat belt for wear, cuts, and proper operation of the retractor and buckle. Replace the seat belt if it is damaged.

Checking the Rollover Protection System (ROPS)

Service Interval: Before each use or daily

Visually inspect the ROPS for loose hardware or any other possible problem. Tighten the hardware or correct the problem before operating.

Notes:

TORO®

Count on it.