Form No. 3327-218

Replacement Pedal Kit

Workman® 1100/2100 and Twister™ Utility Vehicle

Part No. 104-7012

Installation Instructions

Removing the Old Pedals

1. Position the machine on a level surface, stop the engine, and remove the key.

Caution

If you leave the key in the ignition switch, someone could accidently start the engine and seriously injure you or other bystanders.

Remove the key from the ignition switch before you do any maintenance.

2. If you have a floor mat, remove it from around the accelerator and brake pedals.

3. Remove the metal plate on the floor surrounding the pedals.

4. Disconnect the accelerator cable and spring from the accelerator pedal.

5. Disconnect the brake rod from the brake pedal.

6. Remove the bolts securing the pedal pivot rods (Fig. 1).

7. Pull out the pivot rods, removing the pedal assemblies from the top (Fig. 1).

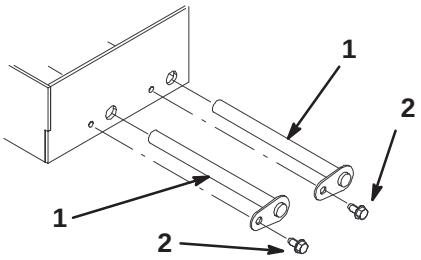

Figure 1

1. Pivot rod
2. Bolt

Installing the New Pedals

1. Remove the bolt and nut securing the parking brake pedal to the brake pedal. Save the torsion spring and discard the rest of the parking brake pedal (Fig. 2).

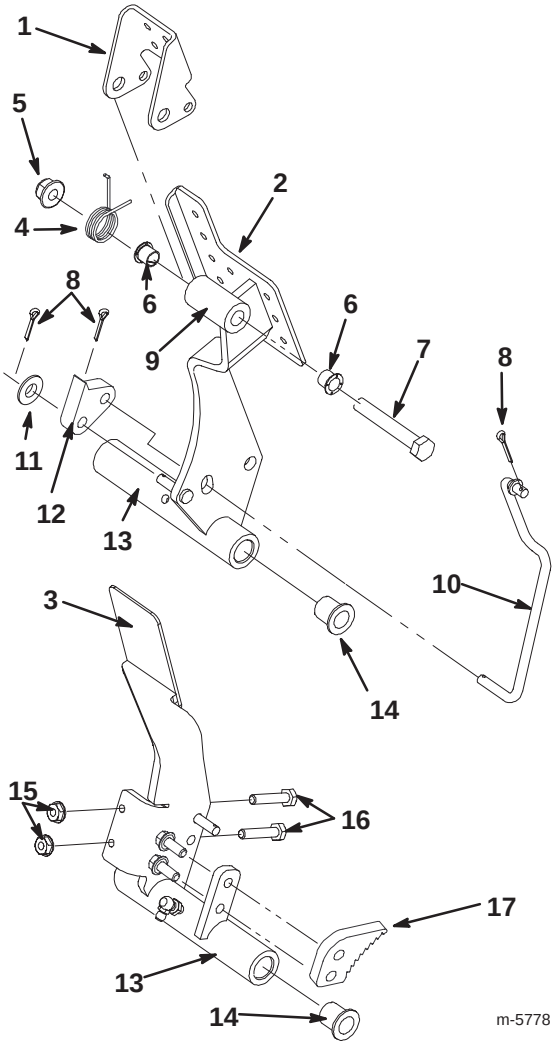

Figure 2

1. Parking brake pedal
2. Brake pedal
3. Accelerator pedal
4. Torsion spring
5. Flange nut, 3/8 in.
6. Small bushing
7. Bolt, 2-1/2 x 3/8 in.
8. Cotter pin
9. Parking brake mounting tube
10. Parking brake rod
11. Washer
12. Parking brake detent
13. Pedal mounting tube
14. Large bushing
15. Nuts
16. Adjustment screws
17. Brake pawl

2. Remove the cotter pins, parking brake detent, and washer from the brake pedal, discarding the rest of the pedal assembly (Fig. 2).

© 2001 by The Toro Company
8111 Lyndale Avenue South
Bloomington, MN 55420-1196

All Rights Reserved
Printed in the USA

3. Remove the bolts securing the brake pawl to the accelerator pedal and the brake pawl, discarding the rest of the accelerator pedal assembly (Fig. 2).

4. Install 2 small bushings into the parking brake pedal mounting tube (Fig. 2).

5. Install the new parking brake pedal to the new parking brake using a bolt (2-1/2 x 3/8 in.) and flange nut (3/8 in.) and the torsion spring from the old pedal (Fig. 2).

6. Connect the parking brake rod the the parking brake pedal and secure it with a cotter pin (Fig. 2).

7. Install the washer and parking brake detent on the new brake pedal assembly securing it to the parking brake rod and the pedal with the cotter pins removed previously (Fig. 2).

8. Install the brake pawl to the new accelerator pedal with the bolts removed previously (Fig. 2).

9. Measure the heights of the 2 adjustment screws on the old accelerator pedal and then remove them and the nuts that secure them (Fig. 2).

10. Install the 2 adjustment screws and nuts on the new accelerator pedal, adjusting them to the same height that they were set on the old pedal (Fig. 2)l.

11. Install 2 large bushing into the ends of the mounting tubes on each pedal (Fig. 2).

12. Insert the accelerator pedal assembly into the pedal box and secure it into the front position using a pivot rod removed previously (Fig. 3).

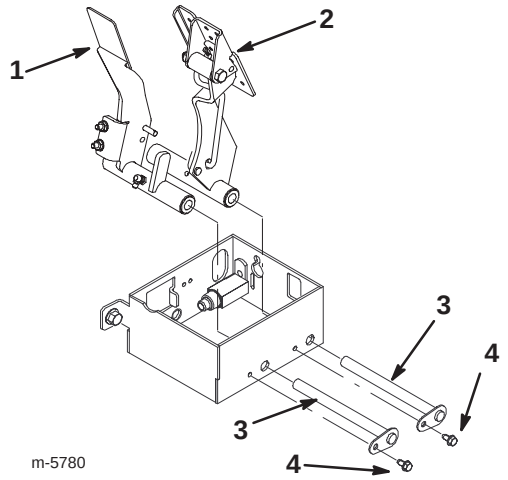

Figure 3

1. Accelerator pedal
2. Brake pedal
3. Pivot rod
4. Bolt

13. Insert the brake pedal assembly into the pedal box and secure it into the rear position using a pivot rod removed previously (Fig. 3).

14. Secure the pivot rods with the 2 bolts removed previously (Fig. 3).

15. Connect the accelerator cable and spring to the accelerator pedal.

16. Connect the brake rod to the brake pedal.

Adjusting the Accelerator Pedal

1. Check and adjust as necessary the accelerator stop bolt to allow for full engagement of the parking brake detent in the brake pawl when the brake pedal is at the maximum travel position.

2. Check and adjust as necessary the switch stop bolt to allow for the full travel of the switch without bottoming it out.

Important Full travel of both the brake and parking brake pedal should not trigger the switch.

Completing the Installation

1. Install the metal plate surrounding the pedals.

2. Install the floor mat if necessary.