Form No. 3327–242

Restraint Kit
2001 Tru Trak™ Sulky
Part No. 105–3195

Installation Instructions

Loose Parts

Note: Use the chart below to identify parts for assembly.

DESCRIPTION	QTY.	USE
Spacer	2	Installing the lanyard
Small Washer	2	
Lanyard	2	
Large Washer, 1/2 in.	2	
Lock Nut, 5/16 in.	2	
Bolt, 5/16 x 1–1/4 in.	2	
Cable	1	Installing the Cable

Important The following instructions replace Installing the Transport Hooks in your Tru Trak™ Sulky manual.

Note: Do not use the transport hooks for the sulky.

Installing the Lanyard

1. From the back bend in the side support, mark the location of the holes (Fig. 1). The center hole must be 4–1/4 in. from the bend and centered vertically. Mark two holes, one inch on each side of the center hole (Fig. 1).
2. Drill 11/32 in. holes at the three marked locations (Fig. 1).

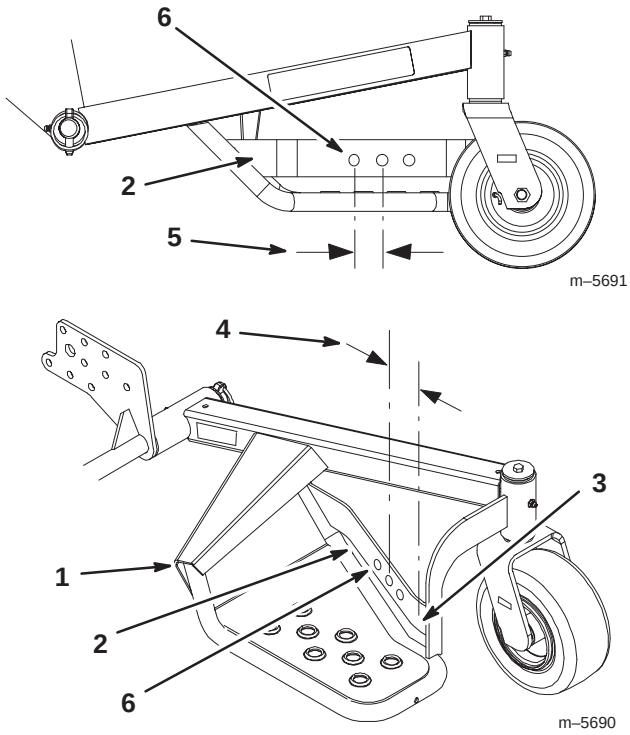

Figure 1

1. Sulky assembly
2. Side support
3. Bend in side support
4. 4–1/4 in. (102 mm)
5. 1 in. (26 mm)
6. 11/32 in. hole

© 2001 by The Toro Company
8111 Lyndale Avenue South
Bloomington, MN 55420-1196

All Rights Reserved
Printed in the USA

3. Install the nut (5/16 in.), small washer, spacer, lanyard and bolt (5/16 x 1–1/4 in.) (Fig. 3).

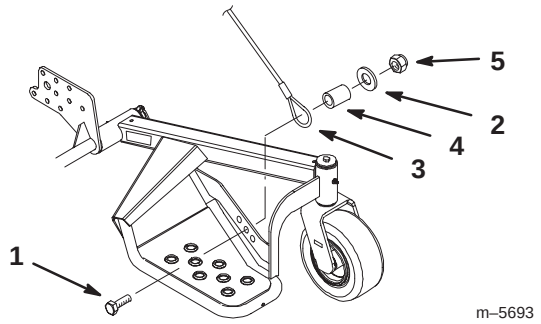

Figure 2

1. Bolt, 5/16 x 1–1/4 in.
2. Small Washer
3. Lanyard
4. Spacer
5. Locknut, 5/16 in.

4. Raise the sulky and position the lanyard loop until it is in a clear location on the pulley guard, both on the outside and inside of the guard (Fig. 3).

5. If a hole does not exist in or near this location, mark the location of the lanyard loop.

Important The sulky must be at least 1-1/2 in. (3.8 cm) from any contact point such as the machine handle or the gear shift lever (when pushed to the right and left) on gear drive machines.

6. Drill a 9/32 in. hole at the marked location.

7. Remove the lanyard from the sulky assembly.

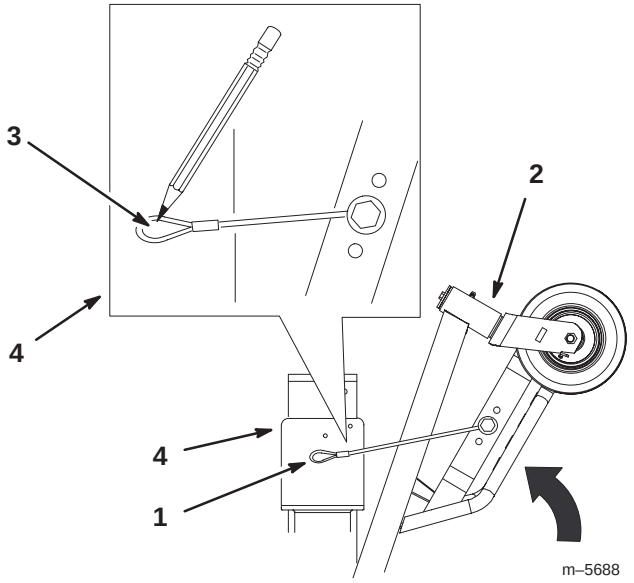

Figure 3

1. Lanyard
2. Sulky assembly
3. Mark location
4. Pulley guard

8. Install the shoulder bolt, washer, lanyard and locknut (5/16 in.) to the pulley guard (Fig. 4).

Note: When the lanyard is attached to the machine, it must not be able to be removed (Fig. 4).

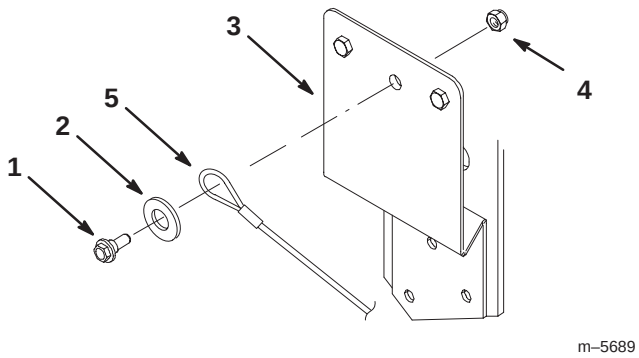

Figure 4

1. Shoulder bolt
2. Large Washer
3. Pulley guard
4. Locknut, 5/16 in.
5. Lanyard

9. Raise the sulky assembly and attach the lanyard.

Note: The sulky can be raised or lowered by using the three different holes in the sulky side support (Fig. 1).

10. Repeat these steps on the opposite sulky assembly.