Form No. 3440-213 Rev B

TORO®

Count on it.

Operator's Manual

60V Inverter

Model No. 51860T—Serial No. 322000001 and Up

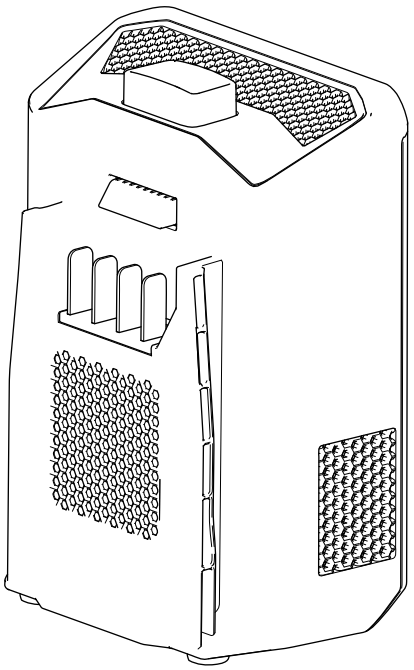

Register at www.Toro.com.
Original Instructions (EN)

3440-213

⚠ WARNING

CALIFORNIA
Proposition 65 Warning

The power cord on this product contains lead, a chemical known to the State of California to cause birth defects or other reproductive harm. Wash hands after handling.

Use of this product may cause exposure to chemicals known to the State of California to cause cancer, birth defects, or other reproductive harm.

Introduction

This inverter is intended to be used by residential homeowners. It is designed to use Toro 60V lithium-ion battery packs. These battery packs are designed to be charged only by Toro 60V lithium-ion battery chargers. Using these products for purposes other than their intended use could prove dangerous to you and bystanders.

Model 51860T does not include a battery or a charger.

Read this information carefully to learn how to operate and maintain your product properly and to avoid injury and product damage. You are responsible for operating the product properly and safely.

Visit www.Toro.com for more information, including safety tips, training materials, accessory information, help finding a dealer, or to register your product.

Whenever you need service, genuine the manufacturer parts, or additional information, contact an Authorized Service Dealer or the manufacturer Customer Service and have the model and serial numbers of your product ready. Figure 1 identifies the location of the model and serial numbers on the product. Write the numbers in the space provided.

Important: **With your mobile device, you can scan the QR code (if equipped) on the serial number plate to access warranty, parts, and other product information.**

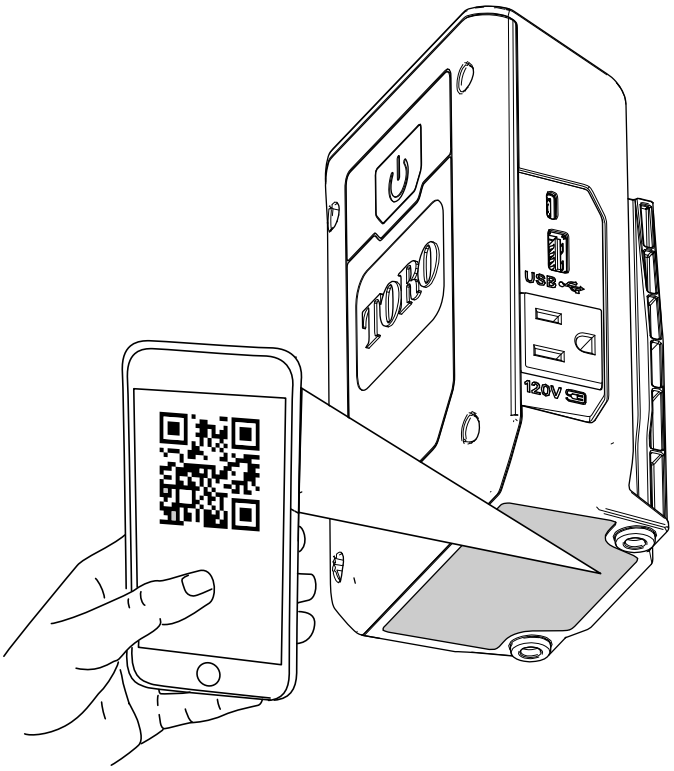

g388847

Figure 1

Model No. _____

Serial No. _____

© 2022—The Toro® Company
8111 Lyndale Avenue South
Bloomington, MN 55420

Contact us at www.Toro.com.
Printed in China
All Rights Reserved

Safety-Alert Symbol

The safety-alert symbol (Figure 2) shown in this manual and on the machine identifies important safety messages that you must follow to prevent accidents.



g000502

Figure 2
Safety-alert symbol

The safety-alert symbol appears above information that alerts you to unsafe actions or situations and is followed by the word **DANGER**, **WARNING**, or **CAUTION**.

DANGER indicates an imminently hazardous situation which, if not avoided, **will** result in death or serious injury.

WARNING indicates a potentially hazardous situation which, if not avoided, **could** result in death or serious injury.

CAUTION indicates a potentially hazardous situation which, if not avoided, **may** result in minor or moderate injury.

This manual uses two other words to highlight information. **Important** calls attention to special mechanical information and **Note** emphasizes general information worthy of special attention.

Safety

IMPORTANT SAFETY INSTRUCTIONS

1. SAVE THESE INSTRUCTIONS—This manual contains important safety and operating instructions for power inverter Model 51860T.
2. Before using the inverter, read all the instructions and cautionary markings on the inverter, battery pack, and product using the battery pack.
3. CAUTION—To reduce risk of injury, use only Toro 60V lithium-ion battery packs with the power inverter. Other brands and types of battery packs may burst, causing personal injury and damage.
4. WARNING—Do not connect the inverter to a wall outlet or any AC distribution wiring, this can cause can cause a fire or electric shock.
5. These devices comply with Part 15 of the FCC rules. Operation is subject to the following 2 conditions: (1) These devices may not cause harmful interference; and (2) these devices must accept any interference received, including interference that may cause undesired operation.

I. Training

1. Keep bystanders and children out of the operating area. Do not allow children to operate the machine. Allow only people who are responsible, trained, familiar with the instructions, and physically capable to operate the machine.
2. Do not allow children to use or play with the battery pack or battery inverter; local regulations may restrict the age of the operator.

II. Preparation

1. Use the inverter only with specifically designated battery packs. Using other types of battery packs may create a risk of injury and/or fire.
2. Do not use a damaged or modified battery pack or battery inverter. It may exhibit unpredictable behavior, resulting in fire, explosion, or risk of injury.
3. If the inverter is damaged, contact an Authorized Service Dealer to replace it.

III. Operation

1. Charge the battery pack with only the battery charger specified by Toro. A charger suitable for 1 type of battery pack may create a risk of fire when used with another battery pack.
2. Use the inverter in a dry, well-ventilated area only. Do not operate the inverter if it is wet or near flammable materials.
3. Do not ground the neutral of the inverter.
4. Do not perform maintenance or service appliances that are connected to the inverter. Disconnect any appliances from the inverter when they are done charging.
5. Follow all operation instructions and do not use the battery pack or inverter outside of the temperature range specified in the instructions. Otherwise, you may damage the battery pack or inverter and increase the risk of fire.
6. Under abusive conditions, the battery pack may eject liquid; avoid contact. If you accidently come into contact with the liquid, flush with water. If the liquid contacts your eyes, seek medical help. Liquid ejected from the battery pack may cause irritation or burns.
7. Do not expose a battery pack or tool to fire or excessive temperature. Exposure to fire or temperature above 130°C (265°F) may cause explosion.
8. CAUTION—A mistreated battery pack may present a risk of fire, explosion, or chemical burn.
    - Do not disassemble the battery pack.
    - Replace the battery pack with a genuine Toro battery pack only; using another type of battery pack may cause a fire or risk of injury.
    - Keep battery packs out of the reach of children and in the original packaging until you are ready to use them.

IV. Maintenance and Storage

1. Do not allow children to clean or maintain the battery inverter.
2. When the battery pack is not in use, keep it away from metal objects such as paper clips, coins, keys, nails, and screws that can make a connection from 1 terminal to another. Shorting the battery terminals may cause burns or a fire.
3. Do not attempt to repair the battery pack or power inverter. Have an Authorized Service Dealer perform service on the battery pack or power inverter using identical replacement parts to ensure that the product is safely maintained.
4. Check with local codes for possible special battery disposal instructions.

SAVE THESE INSTRUCTIONS

Safety and Instructional Decals

Safety decals and instructions are easily visible to the operator and are located near any area of potential danger. Replace any decal that is damaged or missing.



decal139-5366

139-5366

Product Overview

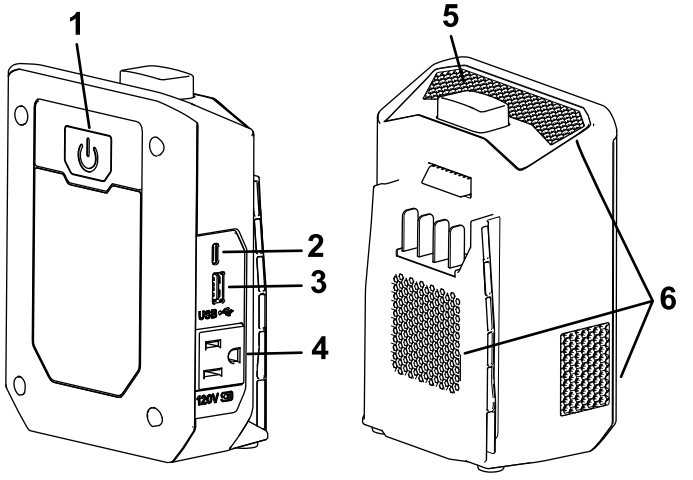

g333934

Figure 3

1. Power button/LED
2. USB-C port
3. USB-A port
4. AC receptacle
5. Battery pack latch button
6. Vents

Specifications

Battery Charger

Model	**51860T**	
Type	60V MAX Lithium-Ion Battery Inverter	
Watts	330W continuous, 450W momentary surge	
Input	60V DC ⎓ 8A	
Output Wave Form	Modified sine wave	
AC Receptacle Output	120V AC ~2.5A, 60Hz	
USB Port Output*	USB-C	5V 2.4A, 9V 3A, 12V 2.5A, 20V 1.5A,
	USB-A	5V 3.4A, 9V 2A, 12V 1.5A

*The USB ports share internal circuitry; if the USB-A port is in use; the USB-C port supplies 5V output only.

Appropriate Temperature Ranges

Charge/store the battery pack at	5°C (41°F) to 40°C (104°F)*
Use battery pack at	-30°C (-22°F) to 49°C (120°F)
Use the tool at	0°C (32°F) to 49°C (120°F)*

*Charging time will increase if you do not charge the battery within this range.

Store the tool, battery pack, and battery charger in an enclosed clean, dry area.

Operation

Installing the Battery

1. Ensure that the vents on the battery and inverter are clear of any dust and debris (Figure 4).
2. Disconnect any devices attached to the inverter.
3. Line up the cavity in the battery pack with the tongue on the inverter (Figure 4).
4. Slide the battery pack into the inverter until it is fully seated.
5. To remove the battery pack, turn the power off, then press down the latch button and slide the battery up and away from the inverter.

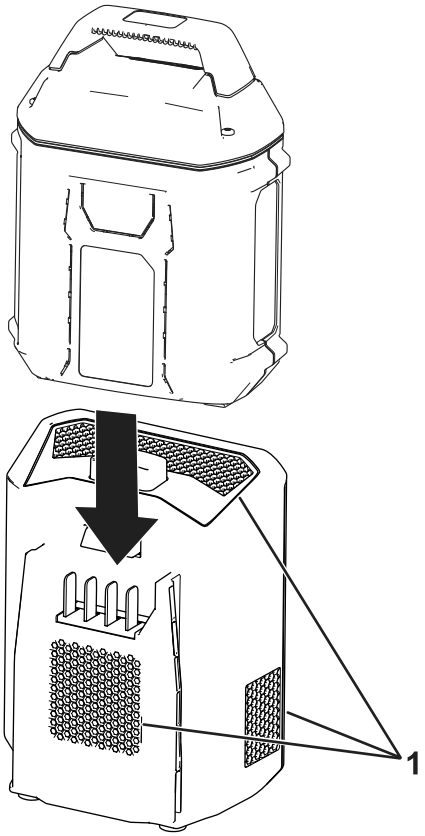

g333935

Figure 4

1. Inverter vents

Using the Inverter

Important: **Use the inverter only in temperatures that are within the appropriate range; refer to Specifications (page 6).**

Important: **Ensure that the combined load requirement of your equipment does not exceed the inverter's output rating.**

Important: **Do not connect the inverter to a household wall outlet or any AC distribution wiring, and do not connect the neutral inverter connector to ground.**

1. Install the battery; refer to Installing the Battery (page 6)
2. Press the power button on the back of the inverter to turn the inverter on, the LED lights up to solid green (Figure 3).
3. Connect your device to a USB port or the AC receptacle (Figure 5).

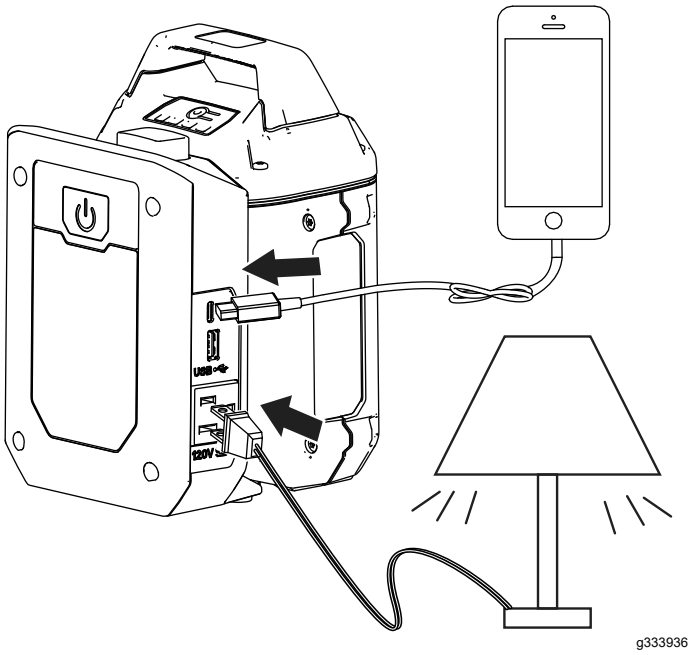

g333936

Figure 5

4. The power button has an LED that signals the condition of the inverter; refer to the following table to interpret the LED indicator light on the inverter.

Indicator light	Condition
Off	No battery pack inserted
Solid Green	Normal operation
Flashing Green	Low battery voltage
Solid Red	High-voltage protection or battery error
Flashing Red, intervals of 4	Short-circuit protection or overload protection
Flashing Red, intervals of 5	Low-voltage protection
Flashing Red, intervals of 6	Battery pack and/or battery inverter is over or under the appropriate temperature range.

*Refer to Troubleshooting (page 9) for more information.

Important: **Whenever the inverter is not in use, turn the inverter off and remove the battery from the inverter.**

Maintenance

Maintenance and servicing are not required under normal conditions.

When you clean the surface of the equipment, wipe it only with a dry cloth.

Do not disassemble the equipment; if it is damaged, contact your Authorized Service Dealer.

Storage

Important: **Store the inverter, battery pack, and charger only in temperatures that are within the appropriate range; refer to Specifications (page 6).**

Important: **If you are storing the inverter for the off-season, remove the battery pack from the tool and charge the battery pack until 2 or 3 LED indicators turn green on the battery. Do not store a fully charged or fully depleted battery. When you are ready to use the inverter again, charge the battery pack until the left indicator light turns green on the charger or all 4 LED indicators turn green on the battery.**

- Disconnect the inverter from the power supply (i.e., remove the battery pack) and check for damage after use.
- Clean all foreign material from the inverter.
- Do not store the inverter with the battery pack installed.
- When not in use, store the inverter, battery pack, and battery charger out of the reach of children.
- Keep the inverter, battery pack, and battery charger away from corrosive agents, such as garden chemicals and de-icing salts.
- To reduce the risk of serious personal injury, do not store the battery pack outside or in vehicles.
- Store the inverter, battery pack, and battery charger in an enclosed clean, dry area.

Preparing the Battery Pack for Recycling

Important: **Upon removal, cover the terminals of the battery pack with heavy-duty adhesive tape. Do not attempt to destroy or disassemble the battery pack or remove any of its components.**

	Lithium-ion battery packs labeled with the Call2Recycle seal can be recycled at any participating retailer or battery recycling facility in the Call2Recycle program (US and Canada only). To locate a participating retailer or facility closest to you, please call 1-800-822-8837 or visit www.call2recycle.org. If you cannot locate a participating retailer or facility nearby, or if your rechargeable battery is not labeled with the Call2Recycle seal, please contact your local municipality for more information on how to responsibly recycle the battery. If you are located outside of the US and Canada, please contact your authorized Toro distributor.

Troubleshooting

Perform only the steps described in these instructions. All further inspection, maintenance, and repair work must be performed by an authorized service center or a similarly qualified specialist if you cannot solve the problem yourself.

Problem	Possible Cause	Corrective Action
The inverter does not charge, shuts down, or the LED indicator light is red.	1. The installed battery pack is out of charge. 2. The battery charger is over or under the appropriate temperature range (red flashing LED in intervals of 4). 3. Input voltage is over or under acceptable levels. 4. The inverter or battery short circuited (red flashing LED in intervals of 4).	1. Replace with a charged battery pack or charge the battery pack. 2. Unplug the battery from the inverter and move them to a place where it is dry and the temperature is between 5°C (41°F) and 40°C (104°F). Allow the unit to cool for at least 15 minutes before restarting after a heat-related shutdown. Unplug the unit while it is cooling. 3. The battery or inverter may be damaged; contact an authorized service dealer. 4. Remove the battery and restart the inverter after 5 minutes.
The battery pack loses charge quickly.	1. The battery pack is over or under the appropriate temperature range.	1. Move the battery pack to a place where it is dry and the temperature is between 5°C (41°F) and 40°C (104°F).
The tool does not run or does not run continuously.	1. There is moisture on the leads of the battery pack. 2. The battery is not fully installed into the tool.	1. Allow the battery pack to dry or wipe it dry. 2. Remove and then replace the battery into the tool making sure that it is fully installed and latched.
Some AC appliances do not start.	1. The power needed to start some AC appliances may be as much as 2 to 8 times its continuous wattage requirements.	1. Read the information panel on each AC appliance carefully to accurately determine the tool's input wattage.
There is a buzzing sound in some plugged-in audio systems.	1. The power supply in the electronic device does not adequately filter the modified sine wave produced by the inverter.	1. Use a higher quality sound system that incorporates a higher quality power amplified supply.
There is a interference in the signal of some plugged-in television devices.	1. The TV signal is too weak. 2. The inverter is being used to power other high-power appliances. 3. The antenna/signal cable is damaged or inadequate. 4. The inverter is shielded to minimize interference with TV signals; the shielding may be damaged.	1. Adjust the orientation of the inverter, the antenna cables, and the TV power cord to minimize interference or move to an area with greater signal reception. 2. Do not operate high-power appliances or tools when you are watching TV. 3. Ensure that the antenna feeding the television provides an adequate ("snow free") signal and that high quality, shielded antenna cable is used. 4. Contact an authorized service dealer.

Notes:

California Proposition 65 Warning Information

What is this warning?

You may see a product for sale that has a warning label like the following:



WARNING: Cancer and Reproductive Harm—www.p65Warnings.ca.gov.

What is Prop 65?

Prop 65 applies to any company operating in California, selling products in California, or manufacturing products that may be sold in or brought into California. It mandates that the Governor of California maintain and publish a list of chemicals known to cause cancer, birth defects, and/or other reproductive harm. The list, which is updated annually, includes hundreds of chemicals found in many everyday items. The purpose of Prop 65 is to inform the public about exposure to these chemicals.

Prop 65 does not ban the sale of products containing these chemicals but instead requires warnings on any product, product packaging, or literature with the product. Moreover, a Prop 65 warning does not mean that a product is in violation of any product safety standards or requirements. In fact, the California government has clarified that a Prop 65 warning "is not the same as a regulatory decision that a product is 'safe' or 'unsafe.'" Many of these chemicals have been used in everyday products for years without documented harm. For more information, go to https://oag.ca.gov/prop65/faqs-view-all.

A Prop 65 warning means that a company has either (1) evaluated the exposure and has concluded that it exceeds the "no significant risk level"; or (2) has chosen to provide a warning based on its understanding about the presence of a listed chemical without attempting to evaluate the exposure.

Does this law apply everywhere?

Prop 65 warnings are required under California law only. These warnings are seen throughout California in a wide range of settings, including but not limited to restaurants, grocery stores, hotels, schools, and hospitals, and on a wide variety of products. Additionally, some online and mail order retailers provide Prop 65 warnings on their websites or in catalogs.

How do the California warnings compare to federal limits?

Prop 65 standards are often more stringent than federal and international standards. There are various substances that require a Prop 65 warning at levels that are far lower than federal action limits. For example, the Prop 65 standard for warnings for lead is 0.5 µg/day, which is well below the federal and international standards.

Why don't all similar products carry the warning?

- Products sold in California require Prop 65 labelling while similar products sold elsewhere do not.
- A company involved in a Prop 65 lawsuit reaching a settlement may be required to use Prop 65 warnings for its products, but other companies making similar products may have no such requirement.
- The enforcement of Prop 65 is inconsistent.
- Companies may elect not to provide warnings because they conclude that they are not required to do so under Prop 65; a lack of warnings for a product does not mean that the product is free of listed chemicals at similar levels.

Why does the manufacturer include this warning?

the manufacturer has chosen to provide consumers with as much information as possible so that they can make informed decisions about the products they buy and use. the manufacturer provides warnings in certain cases based on its knowledge of the presence of one or more listed chemicals without evaluating the level of exposure, as not all the listed chemicals provide exposure limit requirements. While the exposure from the manufacturer products may be negligible or well within the "no significant risk" range, out of an abundance of caution, the manufacturer has elected to provide the Prop 65 warnings. Moreover, if the manufacturer does not provide these warnings, it could be sued by the State of California or by private parties seeking to enforce Prop 65 and subject to substantial penalties.



Count on it.