1979

FORM NO. 3311-398

TORO

MODEL NO. 18015-9000001 & UP

PARTS CATALOG

21" H.P. MULCHER

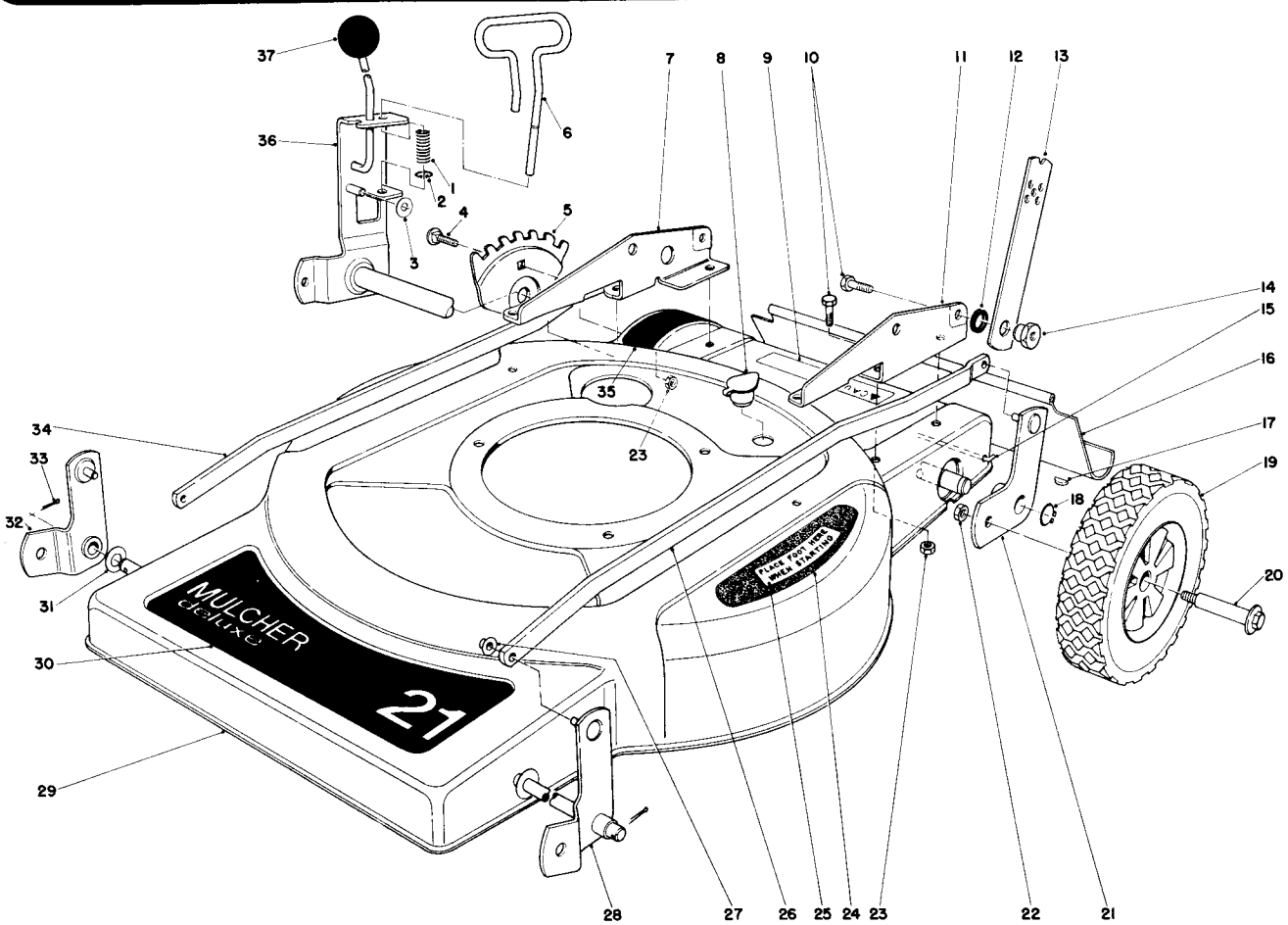

HOUSING ASSEMBLY

Ref. No.	Part No.	Description	No. Used
1	38-2340	Spring Compression	1
2	32120-18	Ring Retaining	1
3	3256-22	Washer	1
4	37-7190	Carriage Bolt	1
5	36-0010	Plate Adjustment	1
6	38-2350	Stop Rod	1
7	38-2260	Handle Bracket R.H.	1
8	6-4500	Washout Port	1
9	36-6590	Caution Decal	1
10	322-2	Capscrew	8
11	38-2250	Handle Bracket L.H.	1
12	3-3287	Rubber Spacer	2
13	27-7080	Handle Latch	2
14	27-6520	Pivot Nut	2
15	33-3204	Shield Rod	1

Ref. No.	Part No.	Description	No. Used
16	33-5560	Safety Shield	1
17	3257-32	Woodruff Key	1
18	32151-62	Ring Retaining	1
19	27-6200	Wheel & Tire Assembly	4
20	27-6230	Wheel Bolt	4
21	38-7390	Pivot Arm Rear L.H.	1
22	32146-6	Nut	4
23	32152-1	Nut	7
24	36-0410	Step Pad	1
25	36-2820	Decal – Step Pad	1
26	36-5060	Spanner Link L.H.	1
27	3290-337	Retainer Push On	4
28	38-2320	Pivot Arm Left Front	1
29	38-2310	Housing	1
30	36-4690	Decal – Front Deck	1

COPYRIGHT © ALL RIGHTS RESERVED

The Toro Company – 1979
MINNEAPOLIS, MN 55420 – U.S.A.

PRICE $1.00

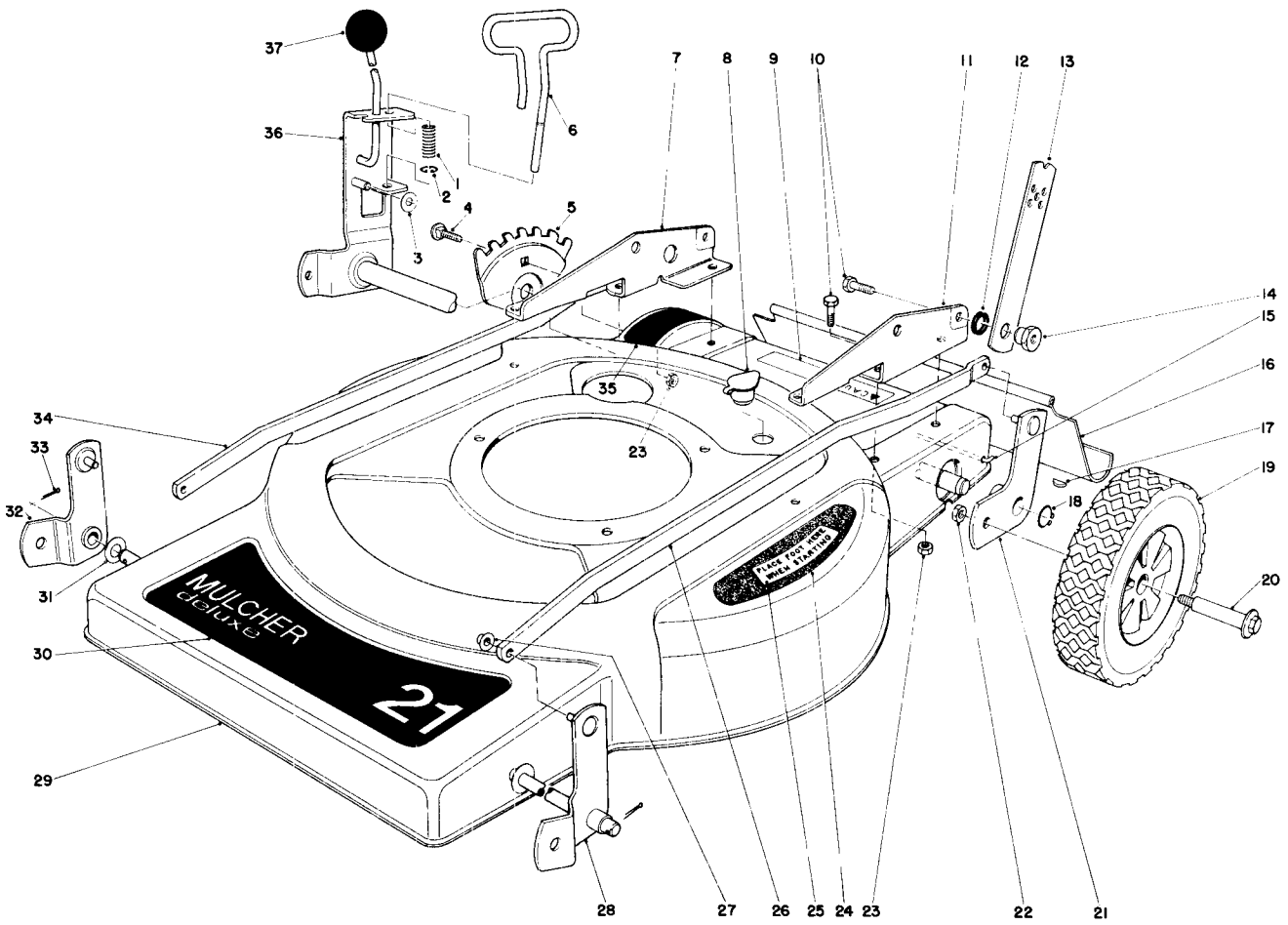

HOUSING ASSEMBLY (Continued)

Ref. No.	Part No.	Description	No. Used
31	23-1120	Washer	2
32	38-2330	Pivot Arm Right Front	1
33	3272-11	Cotter Pin	2
34	36-0370	Spanner Link R.H.	1

Ref. No.	Part No.	Description	No. Used
35	36-0030	Decal Height of Cut	1
36	38-7400	Pivot Arm Bracket	1
37	233-21	Knob	1
*	8-3389	Loose Parts	1

*Not Illustrated

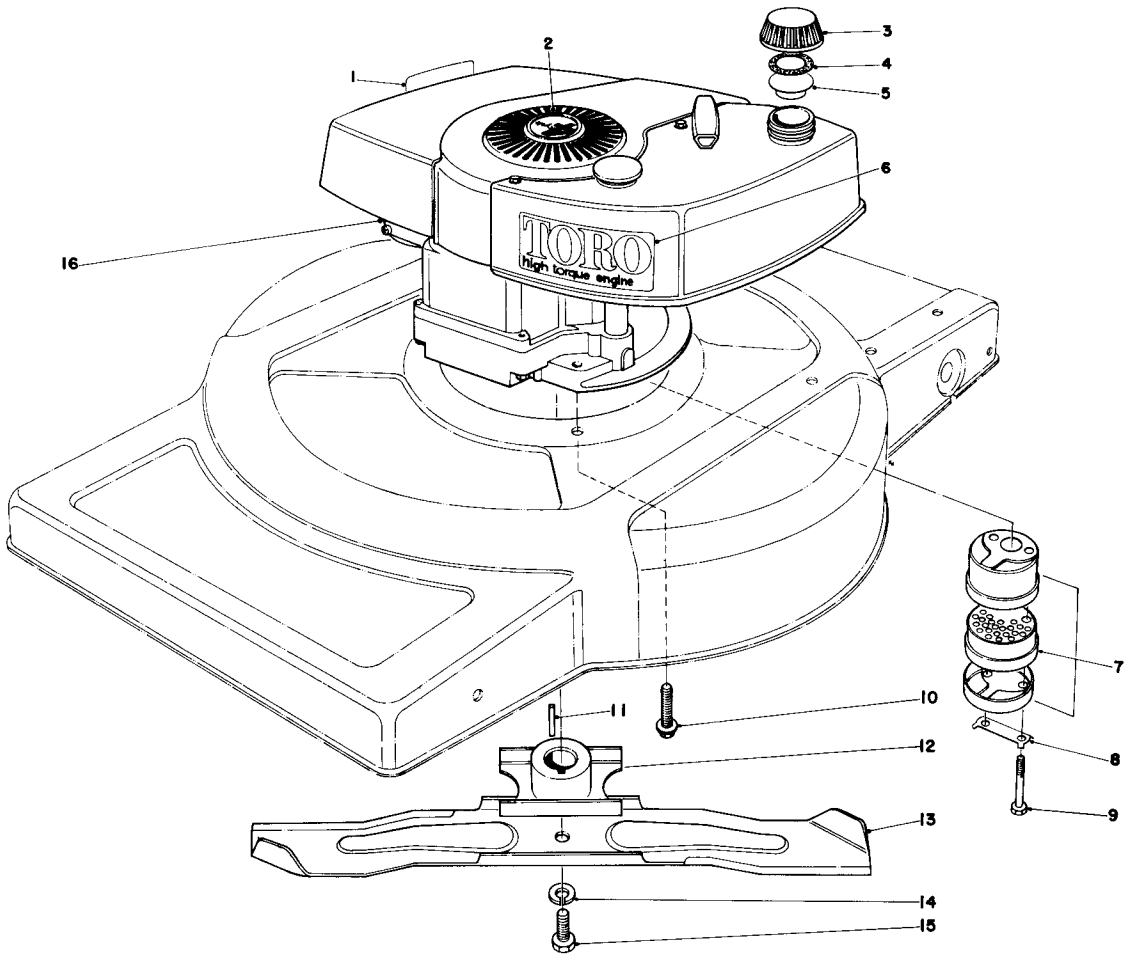

ENGINE ASSEMBLY

Ref. No.	Part No.	Description	No. Used
1	37-1580	Decal – Maintenance	1
2	38-1480	Plug Button	1
3	27-7870	Gas Cap (Incl. Ref. #4 & 5)	1
4	2210-144	Gasket	1
5	2210-143	Baffle	1
6	23-1260	Decal Engine – Toro High Torque	1
7	5-4769	Muffler Assy. (Incl. Ref. #8 & 9)	1
8	3-5094	Locking Clip	1

Ref. No.	Part No.	Description	No. Used
9	321-20	Capscrew	2
10	11-0590	Screw	3
11	7-0036	Square Key	1
12	23-0110	Blade Retainer	1
13	36-8220	Blade	1
14	3253-22	Lockwasher	1
15	23-0080	Blade Bolt	1
16	221-610	Engine	1

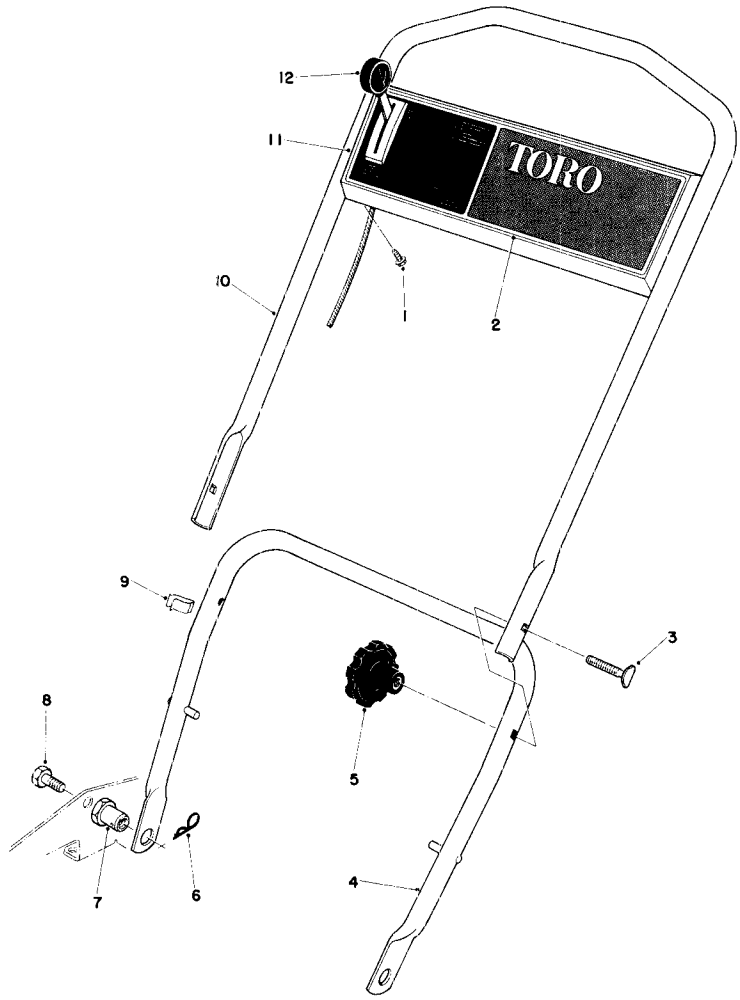

HANDLE ASSEMBLY

Ref. No.	Part No.	Description	No. Used
1	32104-76	Screw	4
2	38-2390	Decal Control Plate	1
3	17-9420	Handle Screw	2
4	38-2450	Lower Handle	1
5	19-4050	Handle Knob	2
6	3290-255	Hair Pin Cotter	2

Ref. No.	Part No.	Description	No. Used
7	12-2080	Pivot Nut	2
8	322-2	Capscrew	2
9	218-466	Conduit Clip	1
10	36-0110	Upper Handle	1
11	38-1182	Control Plate	1
12	36-3272	Throttle Control	1

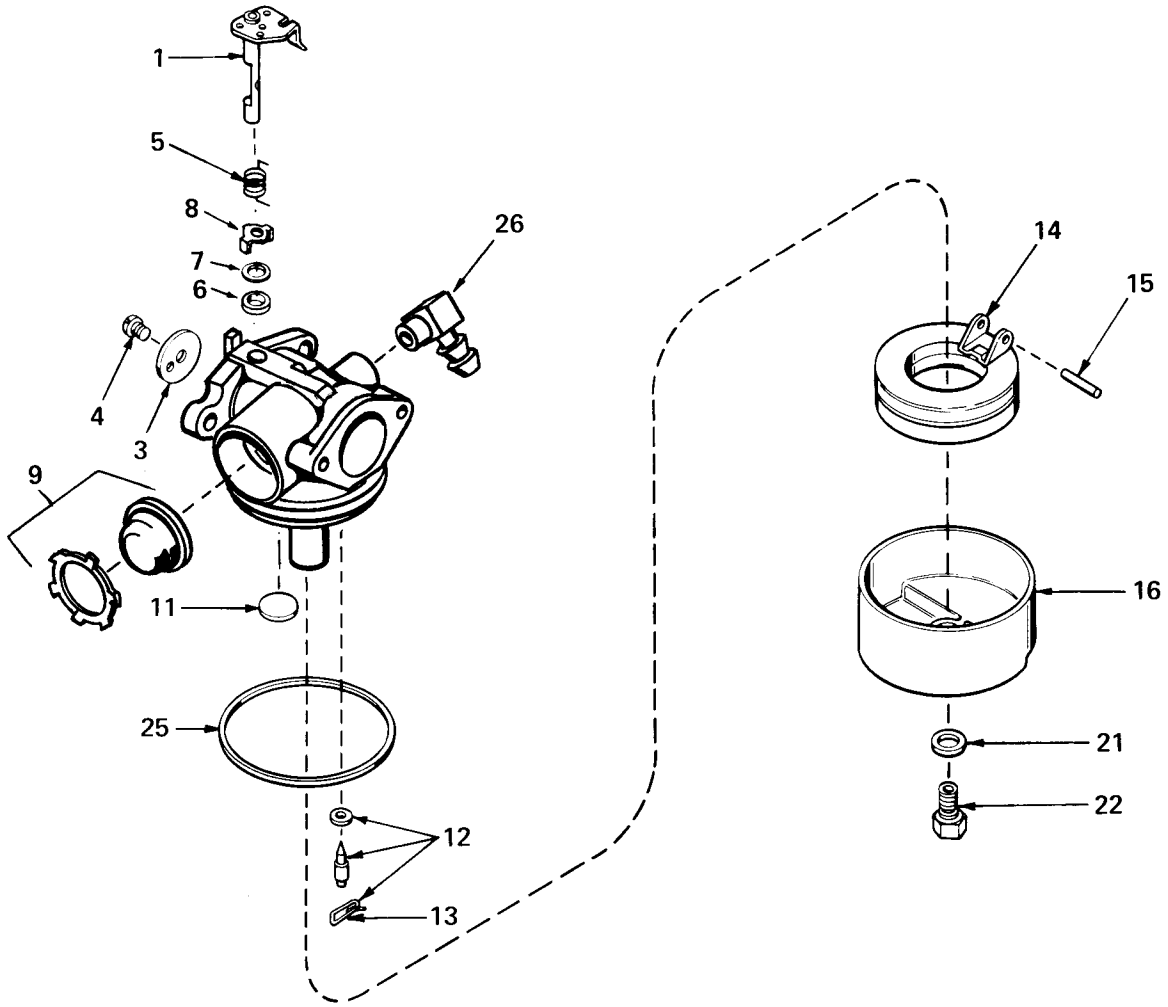

CARBURETOR NO. 632050

Ref. No.	Part No.	Description	No. Used
1	631615	Shaft & Lever Assy., Throttle	1
3	631616	Shutter, Throttle	1
4	650506	Screw, Throttle Shutter	1
5	632016	Spring, Return	1
6	631971	Seal, Dust	1
7	631184	Washer	1
8	631972	Retainer, Dust Seal	1
9	632047	Bulb & Retainer, Primer	1
11	631027	Plug, Welch	1
12	631021	Inlet Needle, Seat & Clip Assy. (Incl. #13)	1

Ref. No.	Part No.	Description	No. Used
13	631022	Clip, Inlet Needle	1
14	632019	Float, Carburetor	1
15	631024	Shaft, Float	1
16	631700	Bowl, Float	1
21	631334	Gasket, Bowl-to-Body	1
22	631935	Nut, Float Bowl	1
25	631028	Gasket, Bowl-to-Body	1
26	631807	Fitting, Fuel Inlet	1

ENGINE TECUMSEH MODEL NO. TNT-100-10049C

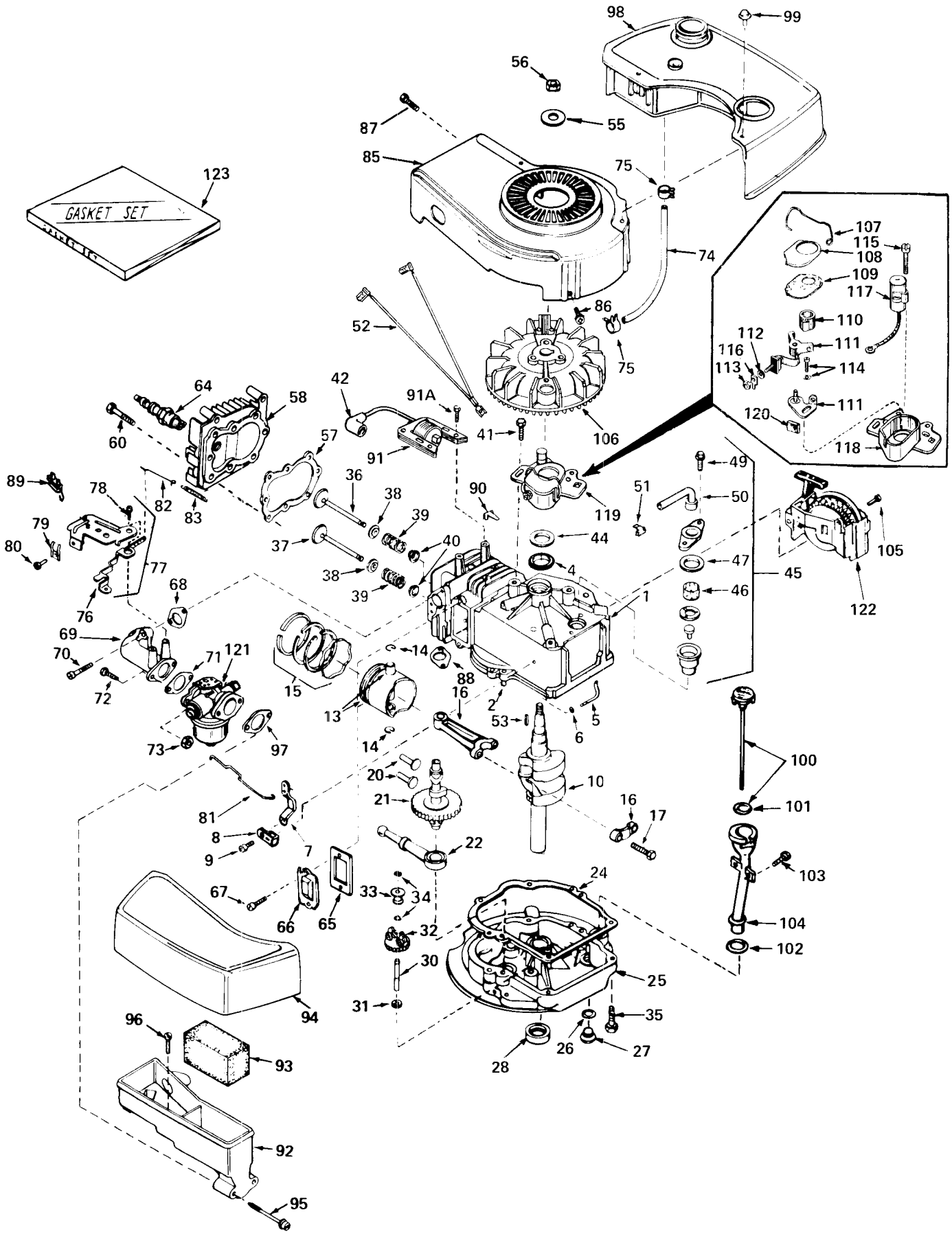

ENGINE TECUMSEH MODEL NO. TNT-100-10049C

Ref. No.	Part No.	Description	No. Used
1	34429	Cylinder Assy. (Incl. #2, 4 & 105)	1
2	26727	Pin, Dowel	2
4	32600	Seal, Oil	1
5	30589	Rod, Governor (Incl. #6)	1
6	28277	Washer, Flat	1
7	32651	Lever, Governor	1
8	31335	Clamp, Governor Lever	1
9	650548	Screw, Hex Slotted Washer Hd.	1
10	34430	Crankshaft	1
13	32603A	Piston, Pin & Ring Assy. (Incl. #14 & 15) (Std.)	1
13	32604A	Piston, Pin & Ring Assy. (Incl. #14 & 15) (.010 oversize)	1
13	32605A	Piston, Pin & Ring Assy. (Incl. #14 & 15) (.020 oversize)	1
14	20381	Ring, Piston Pin Retaining	2
15	32606	Ring Set, Piston (Std.)	1
15	32607	Ring Set, Piston (.010 oversize)	1
15	32608	Ring Set, Piston (.020 oversize)	1
16	30963B	Rod Assy., Connecting (Incl. #17)	1
17	32610A	Bolt, Connecting Rod	2
20	27241	Lifter, Valve	2
21	33553	Camshaft (Mech. Compression Release)	1
22	29914	Pump Assy., Oil	1
24	*26750A	Gasket, Mounting Flange	1
25	30594B	Flange Assy., Mounting (Incl. #26 thru 30)	1
26	*28833	Gasket, Oil Drain Plug	1
27	27244	Plug, Oil Drain	1
28	26208	Seal, Oil	1
30	30574	Shaft, Mechanical Governor	1
31	30590A	Washer, Flat	1
32	30591	Gear Assy., Governor (Incl. #31)	1
33	30588A	Spool, Governor	1
34	29193	Ring, Retaining	2
35	650488	Screw, Hex Hd. Sems	6
36	29314A	Valve, Intake (Std.) (Incl. #38, 39 & 40)	1
36	29315B	Valve, Intake (1/32" oversize) (Incl. #38, 39 & 40)	1
37	29313B	Valve, Exhaust (Std.) (Incl. #38, 39 & 40)	1
37	29315B	Valve, Exhaust (1/32" oversize) (Incl. #38, 39 & 40)	1
38	31671	Cap, Upper Valve Spring	2
39	31672	Spring, Valve	2
40	31673	Cap, Lower Valve Spring	2
41	650489	Screw, Hex Hd. Sems	2
42	610118	Cover, Spark Plug	1
44	33876	Gasket, Stator	1
45	34214	Breather Assy. (Incl. #46, 47, 49, 50 & 51)	1
46	33734	Element, Breather	1
47	*33735	Gasket, Breather	1
49	650768	Screw, Hex Hd. Thread Forming w/Conical Washer	2
50	33886	Tube, Breather	1
51	33887	Clip, Breather Tube	1
52	34432	Wire, Ground	1
53	610995	Key, Flywheel	1
55	650815	Washer, Belleville	1
56	650816	Nut, Flywheel	1
57	*33015	Gasket, Cylinder Head	1
58	34342	Head, Cylinder	1
60	6021A	Screw, Hex Flange Hd.	8
64	33636	Plug, Spark (Champion J-8 or equivalent) Except for Canada	1
64	34251 Canada	Resistor Spark Plug (Canadian Regulations require RJ-17LM resistor spark plug)	1
65	*27234	Gasket, Valve Spring Cover	1
66	32755	Cover, Valve Spring Box	1
67	650128	Screw, Fil. Hd. Sems	2
68	*32649	Gasket, Intake Pipe	1
69	33004	Pipe, Intake	1
70	650451	Screw, Hex Hd. Sems	2
71	*31688	Gasket, Carburetor	1
72	6201	Screw, Hex Hd.	2
73	29752	Nut & Lockwasher Assy.	2
74	30705	Line, Fuel	1
75	26460	Clamp, Fuel Line	2
76	34310	Lever, Control	1
77	33889A	Control Assy., Speed (Incl. #76, 78 & 89)	1
78	650804	Screw, Hex Washer Hd. Shoulder Self-Tap	1
79	27793	Clip, Conduit	1
80	28942	Screw, Hex Hd. Sems	1
81	34336	Link, Governor-to-Throttle	1
82	33151	Link, Governor Spring	1
83	33890	Spring, Governor	1
85	33891A	Housing, Blower	1
86	650497	Screw, Flex Pan Hd.	2
87	30200	Screw, Hex Washer Hd. Self-Tap Sems	2
88	*30081	Gasket, Exhaust	1
89	610973	Terminal Assy.	1
90	29443	Clip, Fuel Line	1
91	34431	Lamination	1
91A	650814	Screw, Hex Washer Hd. Sems	2
92	33895	Body, Air Cleaner	1
93	33896	Filter, Air Cleaner	1
94	33897	Cover, Air Cleaner	1
95	650762	Screw, Fil. Hd. Sems	2
96	650784	Screw, Hex Hd. w/Flatwasher Taptite	1
97	*33051	Gasket, Air Cleaner	1
98	33904A	Tank, Fuel	1
99	28763	Screw, Hex Washer Hd. Shakeproof	2
100	33894A	Dipstick, Oil (Incl. #101) (Twist Lock)	1
101	33590	"O" Ring	1
102	34265	Gasket	1
103	650562	Screw, Hex Washer Hd. Shakeproof	2
104	34380	Tube, Oil Filler (Plastic)	1
105	650802	Screw, Hex Washer Hd. Taptite	2
106	611007	Flywheel	1
107	30551	Spring, Breaker Box Dust Cover	1
108	610947	Cover, Breaker Box Dust	1
109	610955	Gasket, Dust Cover	1
110	30992	Cam, Breaker	1
111	30547A	Breaker Assy.	1
112	610385	Washer, Terminal	1
113	610408	Nut, Terminal	1
114	29181	Screw & Washer Assy., Breaker	1
115	610593	Screw, Condenser Fastening	1
116	33356	Tab, Ground Terminal	1
117	30548B	Condenser	1
118	611008	Core & Plate Group	1
119	611006	Stator Assy. (Incl. #107, 111 thru 118 & 120)	1
120	30549	Felt, Cam Wiper	1
121	632050	Carburetor (Incl. #71)	1
122	590531	Starter, Side Mount	1
123	33906	Gasket Set (Incl. items marked *)	1

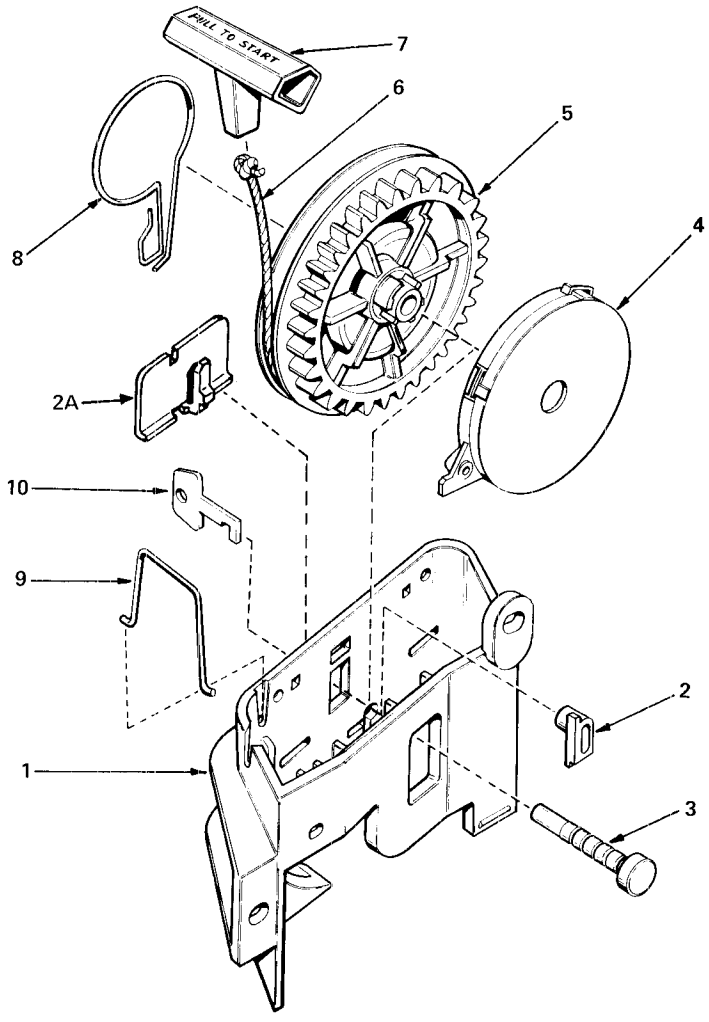

REWIND STARTER NO. 590531

Ref. No.	Part No.	Description	No. Used
1	590523	Bracket, Starter	1
2	590524	Pawl, Locking (Not Used On All Engine Models)	1
2A	590538	Clip, Starter Bracket (Used On Starters Not Equipped With Locking Pawl, Ref. #2)	1
3	590525	Pin, Pulley	1
4	590526	Spring Assy., Rewind (Incl. #3)	1

Ref. No.	Part No.	Description	No. Used
5	590522	Pulley	1
6	590527	Rope, Starter (Length 65" & 9/64" Dia.)	1
7	590452	Handle, Starter	1
8	590528	Brake	1
9	590529	Clip, Rope	1
10	590530	Key (Not Used On All Engine Models)	1

THE TORO PROMISE

It is Toro's policy to design and produce TORO products to provide our customers with a high level of performance and durability in normal operation. Our products, however, are produced in high volume, and it is inevitable that occasionally a unit will reach a customer with a defect in materials or workmanship which causes the unit to fall below the normal high level of TORO performance. Invariably, such a defect will be noticed in a residential product within one year after purchase. Recognizing this possibility, Toro has established a simple guarantee policy and procedure that is intended to assure customer satisfaction. This guarantee statement is as follows:

The Toro Promise

A One Year Limited Warranty

The Toro Company promises to repair any TORO Product if defective in materials or workmanship. The following time periods from the date of purchase apply:

Residential Product	1 Year
Residential Products Used Commercially . . .	45 Days

The costs of parts and labor are included, but the customer pays the transportation costs. Just return any residential product to an Authorized TORO Service Dealer or TORO Distributor.

Should you feel your TORO is defective and wish to rely on The Toro Promise, the following procedure is recommended:

1. Contact any Authorized TORO Service Dealer, TORO Master Service Dealer, or TORO Distributor (the Yellow Pages of your telephone directory is a good reference source).
2. He will either instruct you to return the product to him or recommend another Authorized TORO Service outlet which might be more convenient.
3. Bring the product along with your original sales slip, or other evidence of purchase date, to the service dealer.
4. The servicing dealer will inspect the unit, advise you whether the product is defective and, if so, make all repairs necessary to correct the defect without extra charge to you.

If for any reason you are dissatisfied with the dealer's analysis of the defect or the service performed, you may contact us.

Write:

TORO Customer Service Department
8111 Lyndale Avenue South
Minneapolis, Minnesota 55420

The above remedy of product defects through repair by an Authorized TORO Service Dealer is the purchaser's sole remedy for any defect.

THERE IS NO OTHER EXPRESS WARRANTY. ALL IMPLIED WARRANTIES OF MERCHANTABILITY AND FITNESS FOR USE ARE LIMITED TO THE DURATION OF THE EXPRESS WARRANTY.

Some states do not allow limitation on how long implied warranty lasts, so the above limitation may not apply to you.

This warranty applies only to parts or components which are defective and does not cover repairs necessary due to normal wear, misuse, accidents, or lack of proper maintenance. Regular, routine maintenance of the unit to keep it in proper operating condition is the responsibility of the owner.

All warranty repairs reimbursable under The Toro Promise must be performed by an Authorized TORO Service Dealer using Toro approved replacement parts.

Repairs or attempted repairs by anyone other than an Authorized TORO Service Account are not reimbursable under The Toro Promise. In addition, these unauthorized repair attempts may result in additional malfunctions, the correction of which is not covered by warranty.

The Toro Company is not liable for indirect, incidental or consequential damages in connection with the use of the product including any cost or expense of providing substitute equipment or service during periods of malfunction or non-use.

Some states do not allow the exclusion of incidental or consequential damages, so the above exclusion may not apply to you.

This warranty gives you specific legal rights, and you may also have other rights which vary from state to state.

Compliance with Radio Interference Regulations Certified.
Certifie Conforme au Reglement sur le Brouillage Radioelectrique.

PRODUCT CHANGES

In an effort to make improvements available to TORO owners as quickly as possible, minor changes are incorporated into Toro's products from time to time that do not become immediately shown in the Parts Catalog. If such a change apparently has been made in your unit, which is not reflected in your manual, see your TORO Distributor or his Authorized TORO Service Dealer for information and part numbers.

IDENTIFICATION AND ORDERING

Model and Serial Numbers

The Mower has two identification numbers: a model number and a serial number. The two numbers are stamped on a decal which is located on the mower housing between the rear wheels. In any correspondence concerning the mower, supply model and serial numbers to assure that correct information and replacement parts are obtained.

To order replacement parts from an Authorized TORO Service Dealer, supply the following information.

1. Model and serial numbers of the mower.

2. Part number, description, and quantity of part(s) desired.

NOTE: Do not order by reference number if a parts catalog is being used; use the PART NUMBER.

Keep Your TORO All Toro Genuine TORO PARTS & ACCESSORIES ***Insist on Genuine Toro Parts***

MAINTENANCE RECORD

Date	Hours Used	Oil Change	Air Cleaner Service	Lubrication	Winter Storage	Spring Service	Spark Plug Gap

MAINTENANCE RECORD

Date	Hours Used	Oil Change	Air Cleaner Service	Lubrication	Winter Storage	Spring Service	Spark Plug Gap

MAINTENANCE RECORD

Date	Hours Used	Oil Change	Air Cleaner Service	Lubrication	Winter Storage	Spring Service	Spark Plug Gap

Litho in U.S.A.