1979 FORM NO. 3311-402

HOME PRO™ by TORO®

PARTS CATALOG

5 hp TILLER

MODEL NO. 58600-9000001 & UP

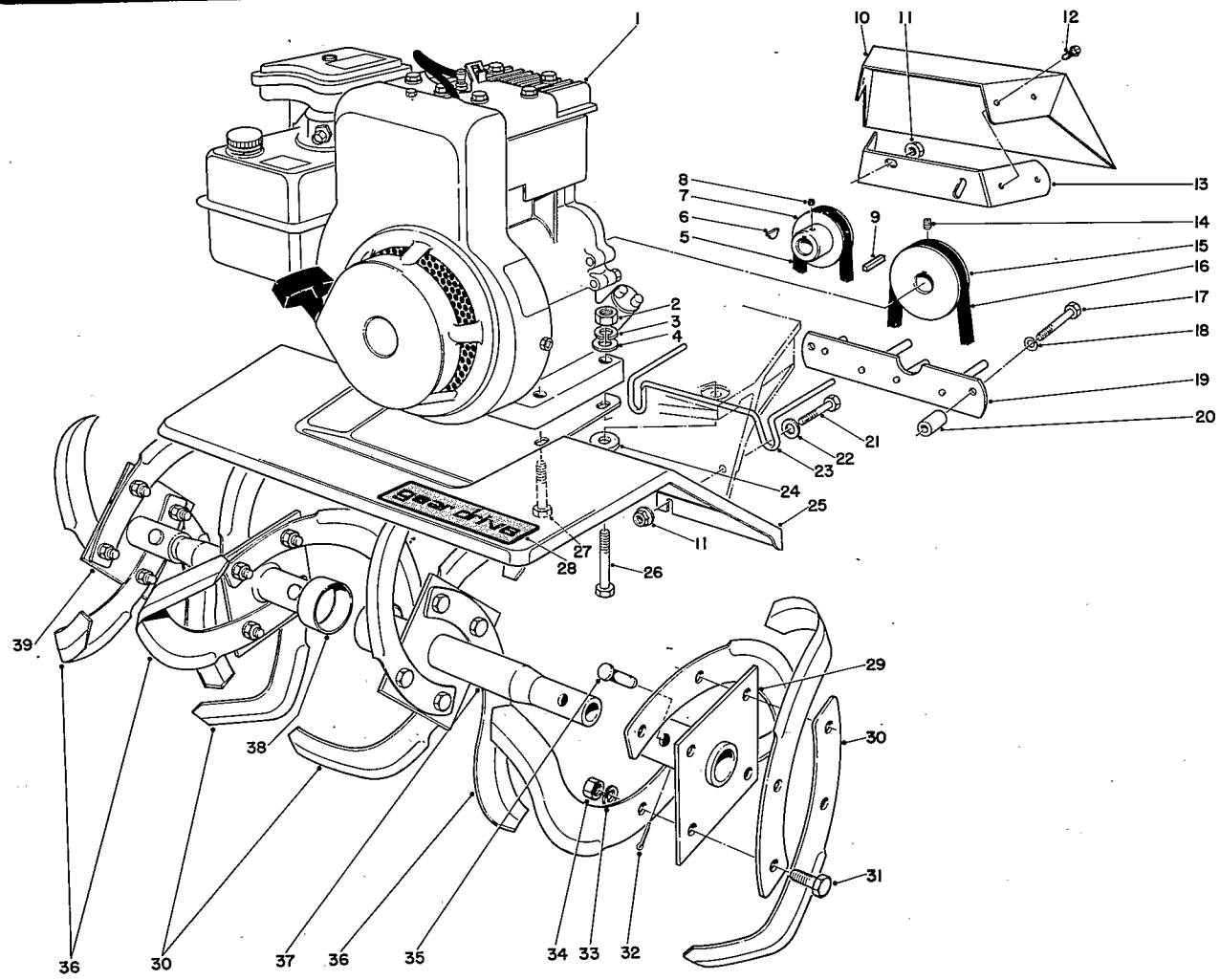

TINE AND ENGINE ASSEMBLY

Ref. No.	Part No.	Description	No. Used
1	221-529	Engine	1
2	3217-6	Nut	4
3	3253-4	Lockwasher	4
4	3256-23	Plain Washer	1
5	28-8660	V-Belt Rev.	1
6	3257-37	Woodruff Key	1
7	26-3570	Pulley — Engine Rev.	1
8	3245-32	Hex Socket Set Screw	2
9	7-0036	Key	1
10	26-3670	Pulley Cover	1
11	32128-10	Flanged Locknut	4
12	32104-76	Self-Tapping Screw	4
13	26-3650	Strap-Belt Shield	1
14	3245-34	Hex Socket Set Screw	2

Ref. No.	Part No.	Description	No. Used
15	27-5830	Pulley & Engine (Fwd.)	1
16	28-8630	V-Belt (Fwd.)	1
17	321-18	Capscrew	2
18	3253-3	Lockwasher	2
19	26-3770	Belt Guide	1
20	26-3220	Spacer	2
21	321-8	Capscrew	2
22	3256-22	Washer	2
23	26-4030	Belt Guide-Worm Shaft	1
24	7-0081	Spacer	4
25	26-3660	Tine Shroud	1
26	322-12	Capscrew	1
27	322-11	Capscrew	3
28	38-7470	Decal "Gear Drive"	1

COPYRIGHT © ALL RIGHTS RESERVED

The Toro Company — 1979
MINNEAPOLIS, MN 55420 — U.S.A.

PRICE $1.00

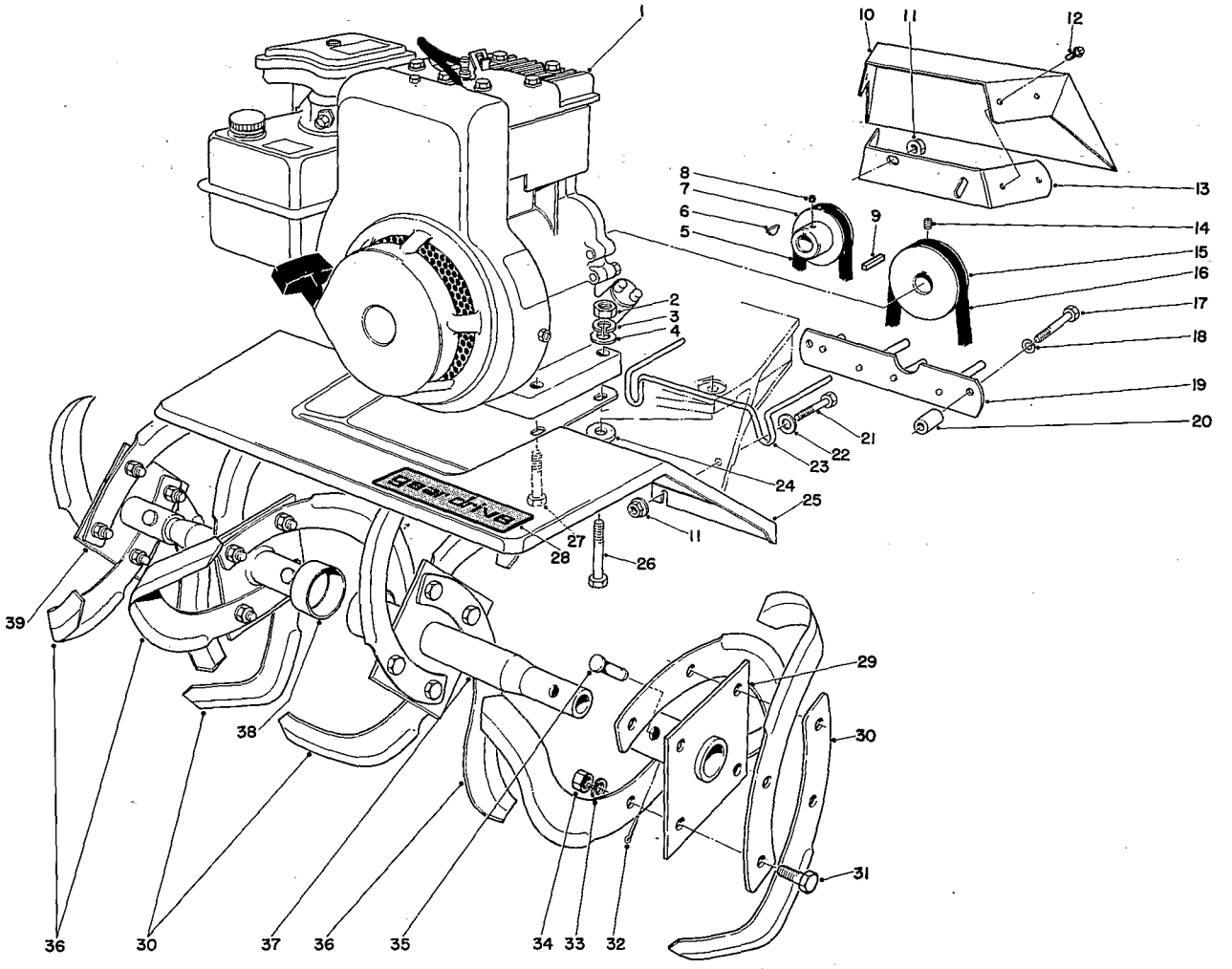

TINE AND ENGINE ASSEMBLY (Continued)

Ref. No.	Part No.	Description	No. Used
29	24-6960	Axle L.H. Outer	1
30	7-0103	Tine R.H.	8
31	323-7	Hex Hd. Capscrew	16
32	3272-11	Cotter Pin	4
33	3253-21	Lockwasher	16
34	3217-7	Nut	16

Ref. No.	Part No.	Description	No. Used
35	7-2116	Tine Pin	4
36	7-0102	Tine L.H.	8
37	24-6970	Axle L.H. Inner	1
38	24-6950	Axle R.H. Inner	1
39	24-6940	Axle R.H. Outer	1

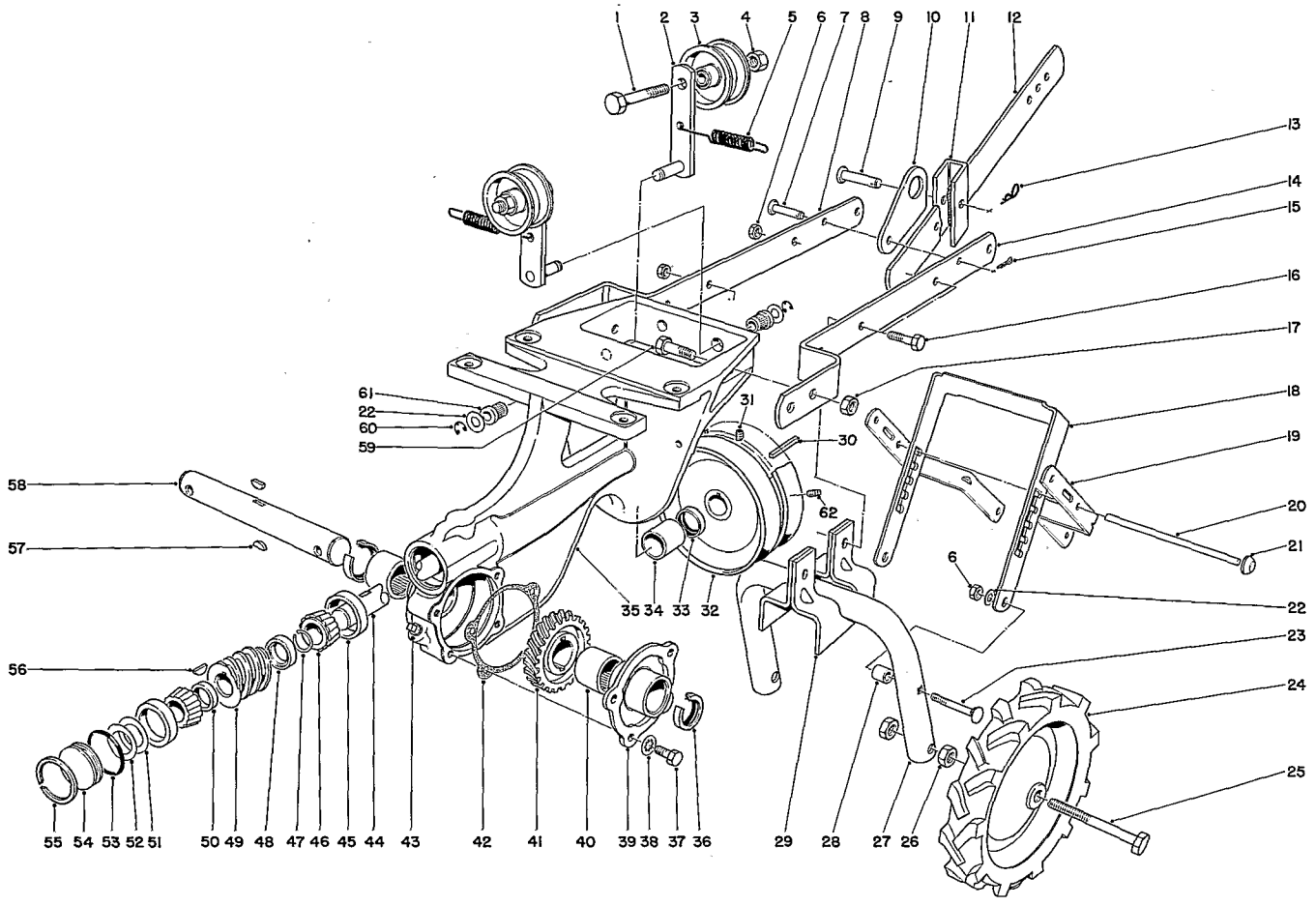

CHASSIS ASSEMBLY

Ref. No.	Part No.	Description	No. Used
1	323-8	Capscrew	2
2	26-7100	Idler Arm	2
3	7-0056	Pulley	2
4	32152-2	Locknut	2
5	26-3730	Spring – Extension	2
6	32152-1	Nut	5
7	283-14	Pin	1
8	26-3120	Drawbar R.H.	1
9	283-23	Pin	1
10	26-3750	Latch – Depth Gauge	1
11	26-3740	Bracket – Depth Gauge	1
12	26-3760	Depth Gauge	1
13	3290-255	Hair Pin Cotter	1
14	26-5850	Drawbar L.H.	1
15	3272-6	Cotter Pin	1
16	322-7	Capscrew	3
17	32149-10	Nut	4
18	26-3180	Lever – Wheel Adjustment	1
19	26-3130	Support Handle	2
20	26-3230	Shaft – Wheel Adjustment	1
21	3290-390	Push-On	2
22	3256-23	Washer	4
23	3230-7	Carriage Bolt	2

Ref. No.	Part No.	Description	No. Used
24	26-3610	Wheel	2
25	26-3600	Wheel Bolt	2
26	32153-5	Locknut	4
27	26-3140	Axle Yoke	1
28	5-1537	Spacer	2
29	26-3150	Saddle Yoke	2
30	7-0036	Key	1
31	3241-2	Set Screw	1
32	27-5840	Pulley – Worm Shaft	1
33	253-84	Oil Seal	1
34	256-167	Bushing	1
35	26-2280	Chassis	1
36	7-0045	Oil Seal	2
37	3235-18	Hex Hd. Capscrew	4
38	3254-8	Lockwasher	4
39	7-0048	Cover	1
40	252-88	Needle Bearing	2
41	7-0047	Worm Wheel	1
42	7-0020	Gasket	1
43	281-1	Pipe Plug	1
44	7-0012	Shaft Worm	1
45	254-79	Bearing Cup	2
46	254-78	Bearing Cone	2

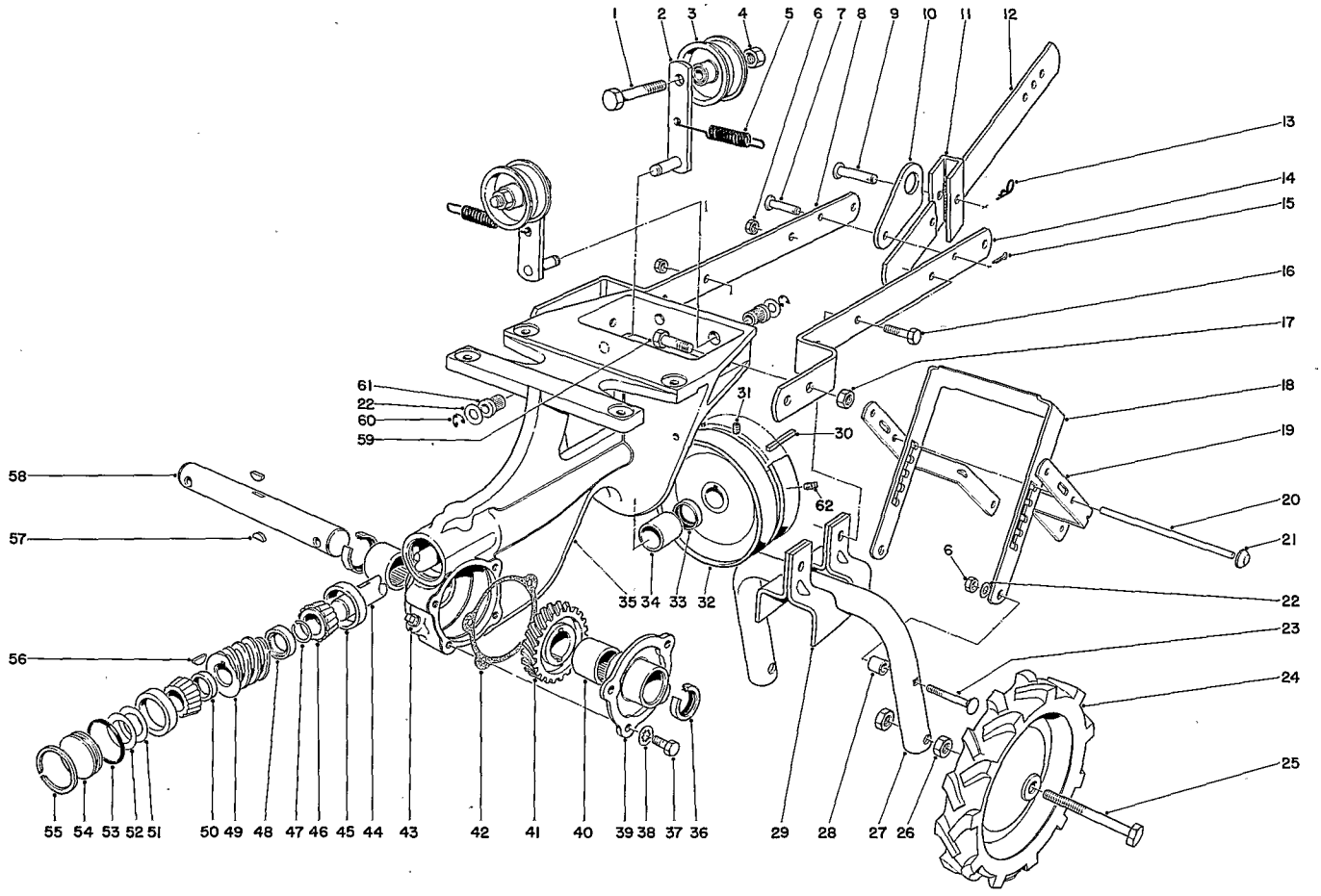

CHASSIS ASSEMBLY (Continued)

Ref. No.	Part No.	Description	No. Used
47	7-0013	Snap Ring	1
48	26-5800	Spacer Rear	1
49	7-0016	Worm Gear	1
50	7-0015	Spacer Front	1
51	23-7690	Shim (.010)	A/R
52	23-7700	Shim (.020)	A/R
53	237-71	"O" Ring	1
54	23-7710	Plug Tiller	1

Ref. No.	Part No.	Description	No. Used
55	7-0018	Snap Ring	1
56	3257-23	Woodruff Key	1
57	3257-33	Woodruff Key	2
58	7-0046	Worm Wheel Shaft	1
59	323-18	Capscrew	4
60	32120-35	Snap Ring	2
61	7-0023	Idler Bearing	2
62	3241-5	Set Screw	1

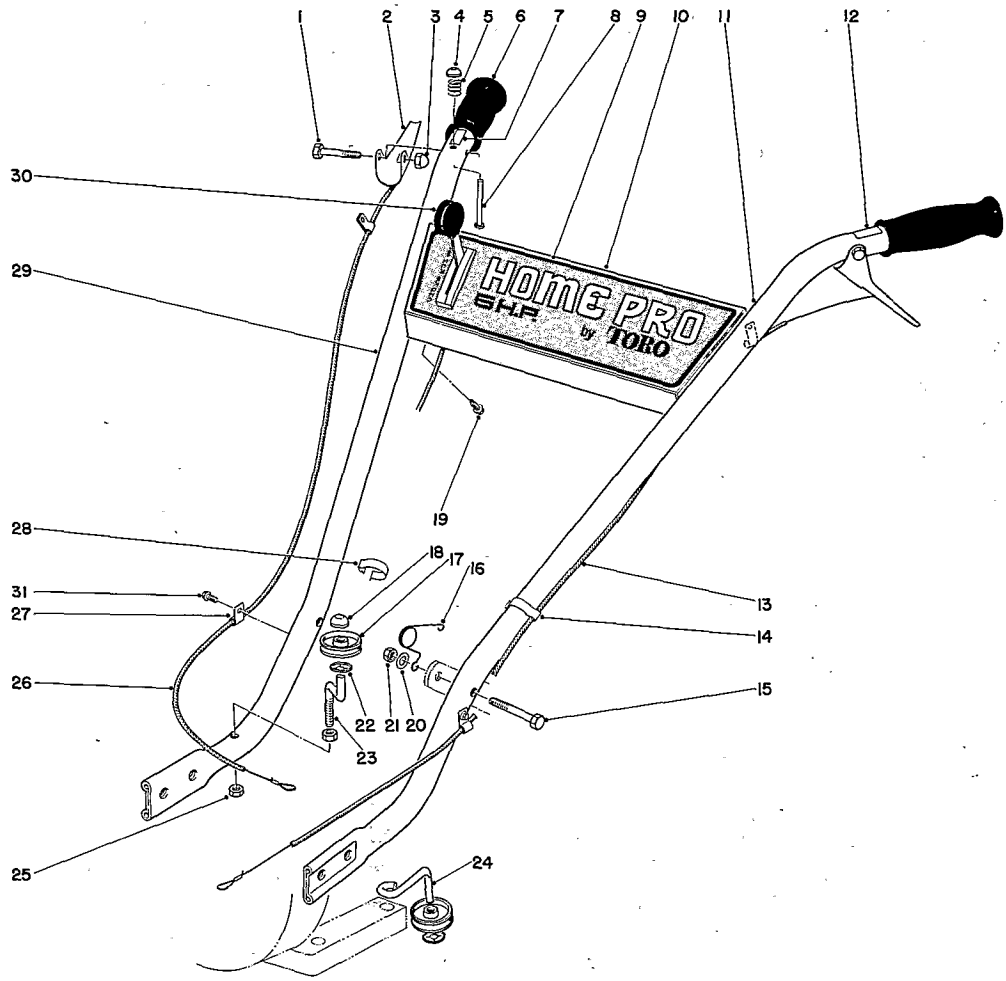

HANDLE ASSEMBLY

Ref. No.	Part No.	Description	No. Used
1	321-10	Capscrew	2
2	26-3630	Lift – Bail	2
3	32111-7	Nut – Acorn	2
4	32111-9	Cap Push-On	1
5	5-4723	Spring	1
6	235-20	Hand Grip	2
7	26-3710	Decal – Fwd.	1
8	26-3640	Pin Lock In	1
9	38-7500	Decal – Escutcheon	1
10	17-9300	Escutcheon Panel	1
11	26-3420	Handle L.H.	1
12	26-3720	Decal Rev.	1
13	26-3460	Cable Assembly Rev.	1
14	2412-47	Boden Clip	1
15	322-10	Capscrew	2
16	26-3690	Spring – Torsion	2

Ref. No.	Part No.	Description	No. Used
17	26-3490	Pulley Cable	2
18	3290-396	Push-On, Cap Type	1
19	32104-76	Self Tapping Screw	4
20	3256-23	Plain Washer	2
21	32152-1	Nut	2
22	3290-395	Retainer – Push On	2
23	26-3470	Spindle – Fwd.	1
24	26-3480	Spingle – Rev.	1
25	32128-28	Nut	2
26	26-3450	Cable Assembly Fwd.	1
27	2412-21	Clamp	4
28	26-5890	Boden Clip	1
29	26-3440	Handle R.H.	1
30	26-3590	Throttle Control	1
31	32140-29	Self Tapping Screw	4
*	8-4789	Loose Parts	1

*Not Illustrated

BRIGGS & STRATTON ENGINE MODEL NO. 130292
TYPE 0728-02

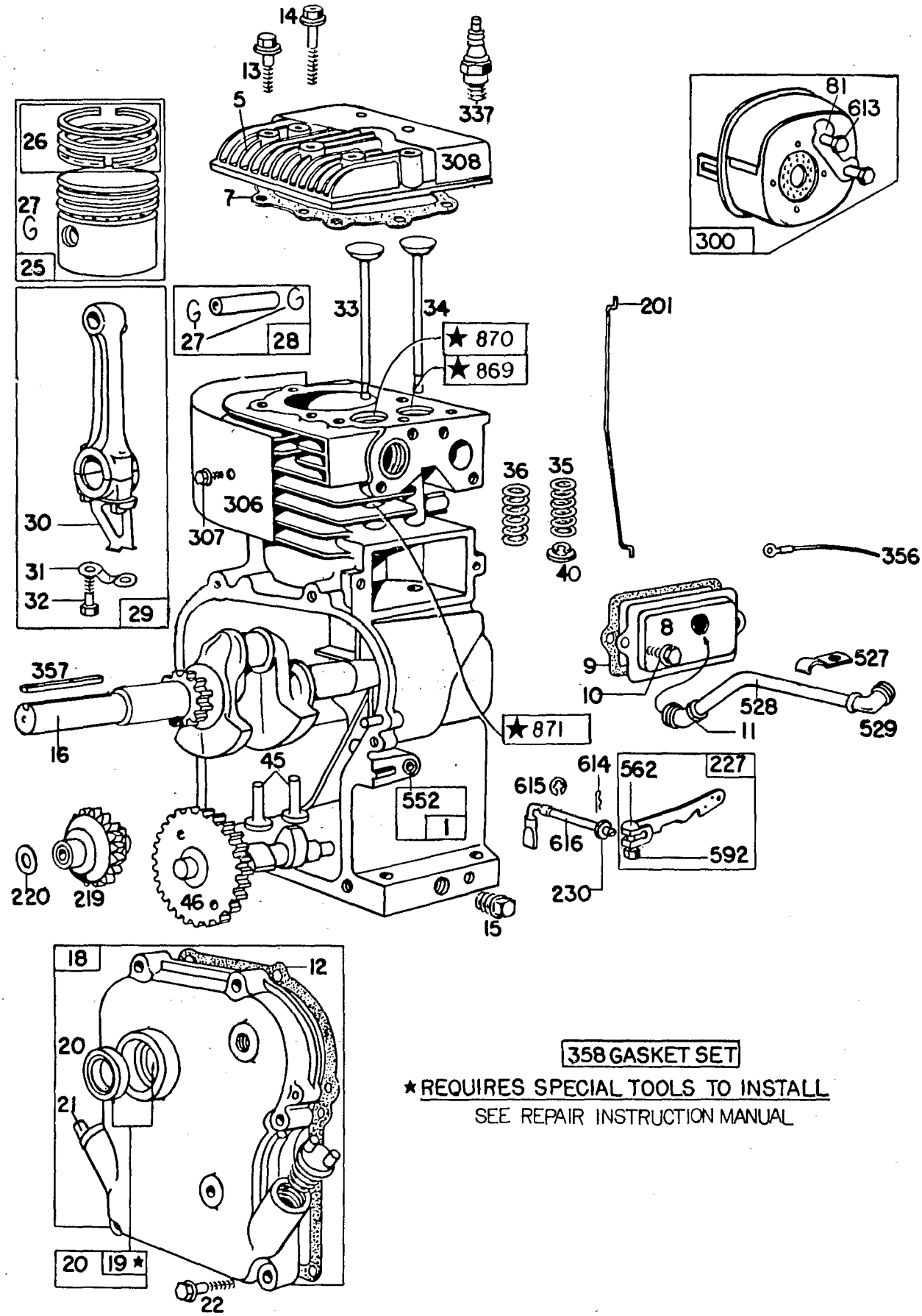

358 GASKET SET

★ REQUIRES SPECIAL TOOLS TO INSTALL
SEE REPAIR INSTRUCTION MANUAL

BRIGGS & STRATTON ENGINE MODEL NO. 130292
TYPE 0728-02

Ref. No.	Part No.	Description	No. Used
1	391977	Cylinder Assembly	1
5	211542	Head – Cylinder	1
7	*270383	Gasket – Cylinder Head	1
8	294178	Breather – Valve Chamber	1
9	*27549	Gasket – Valve Cover	1
10	93394	Screw – Breather Mtg. Sem	1
11	66578	Grommet – Breather Tube	1
12	*270080	Gasket – Crankcase – .015" Thick (Standard)	1
	*270125	Gasket – Crankcase – .005" Thick	1
	*270126	Gasket – Crankcase – .009" Thick	1
13	93368	Screw – Cylinder Head (2-3/32" Long)	1
14	93369	Screw – Cylinder Head (2-15/32" Long)	1
15	91249	Plug – Pipe, 1/4" Std., Square Head	1
16	260938	Crankshaft	1
18	298183	Cover Assembly – Crankcase	1
19	297603	Bushing – Crankcase Cover **Note:** Requires Special Tools For Installation.	1
20	294606	Seal – Oil **Note:** 298041 Seal – Oil Used On The Auxiliary P.T.O. Shaft	1
21	66768	Plug – Oil Filler	1
22	93032	Screw – Crankcase Cover Mounting Sem **Note:** 93656 Stud 90832 Lockwasher Used To Mount Crankcase Cover	1
25	298904	Piston Assy. – Standard	1
	298905	Piston Assy. – .010" O.S.	1
	298906	Piston Assy. – .020" O.S.	1
	298907	Piston Assy. – .030" O.S.	1
26	298982	Ring Set – Standard Piston	1
	298983	Ring Set – .010" O.S. Piston	1
	298984	Ring Set – .020" O.S. Piston	1
	298985	Ring Set – .030" O.S. Piston	1
27	26026	Lock – Piston Pin	1
28	298909	Pin Assy. – Piston – Standard	1
	298908	Pin Assy. – Piston – .005"O.S.	1
29	299430	Rod Assembly – Connecting **Note:** For Connecting Rod w/.020" Undersize Crankpin Bore – Order No. 390459.	1

Ref. No.	Part No.	Description	No. Used
30	221890	Dipper – Connecting Rod	1
31	221876	Lock – Conn. Rod Screw	1
32	92296	Screw – Connecting Rod	1
33	211119	Valve – Exhaust	1
34	261044	Valve – Intake	1
35	260552	Spring – Intake Valve	1
36	26478	Spring – Exhaust Valve	1
40	93312	Retainer – Valve Spring	1
45	260642	Tappet – Valve	1
46	211284	Gear – Cam	1
81	222929	Lock – Muffler Screw	1
201	260661	Link – Governor	1
219	391737	Gear – Governor	1
220	221551	Washer – Thrust	1
227	391966	Lever Assembly – Governor – For 1/4" Dia. Crank	1
230	222450	Washer - Governor Lever (¼"I.D)	1
300	393593	Muffler – Exhaust	1
306	221511	Shield – Cylinder	1
307	93042	Screw – Cylinder Shield Mounting Sem	1
308	221512	Cover – Cylinder Head	1
337	293918	Plug – Spark (W/Gasket 1-1/2" Resistor Type) **Note:** For Ignition Cable Terminal Order No. 221798	1
356	295413	Wire – Ground	1
357	91539	Key	1
358	297615	Gasket Set	1
527	221514	Clamp – Breather Tube	1
528	230722	Tube – Breather	1
529	67838	Grommet – Breather Tube	1
552	231079	Bushing – Governor Crank (1/4" I.D.)	1
562	92613	Bolt – Governor Lever	1
592	231082	Nut – Hex. – 10-24	1
613	93549	Screw – Muffler Mtg.	1
614	93306	Cotter – Hair Pin	1
615	93307	Retainer – E-Ring	1
616	231077	Crank – Governor (1/4" Dia.)	1
869	211158	Seat – Intake Valve (Standard)	1
870	211172	Seat – Exhaust Valve (Standard)	1
871	63709	Guide – Exhaust Valve	1

*Included in Gasket Set – Part No. 297615.

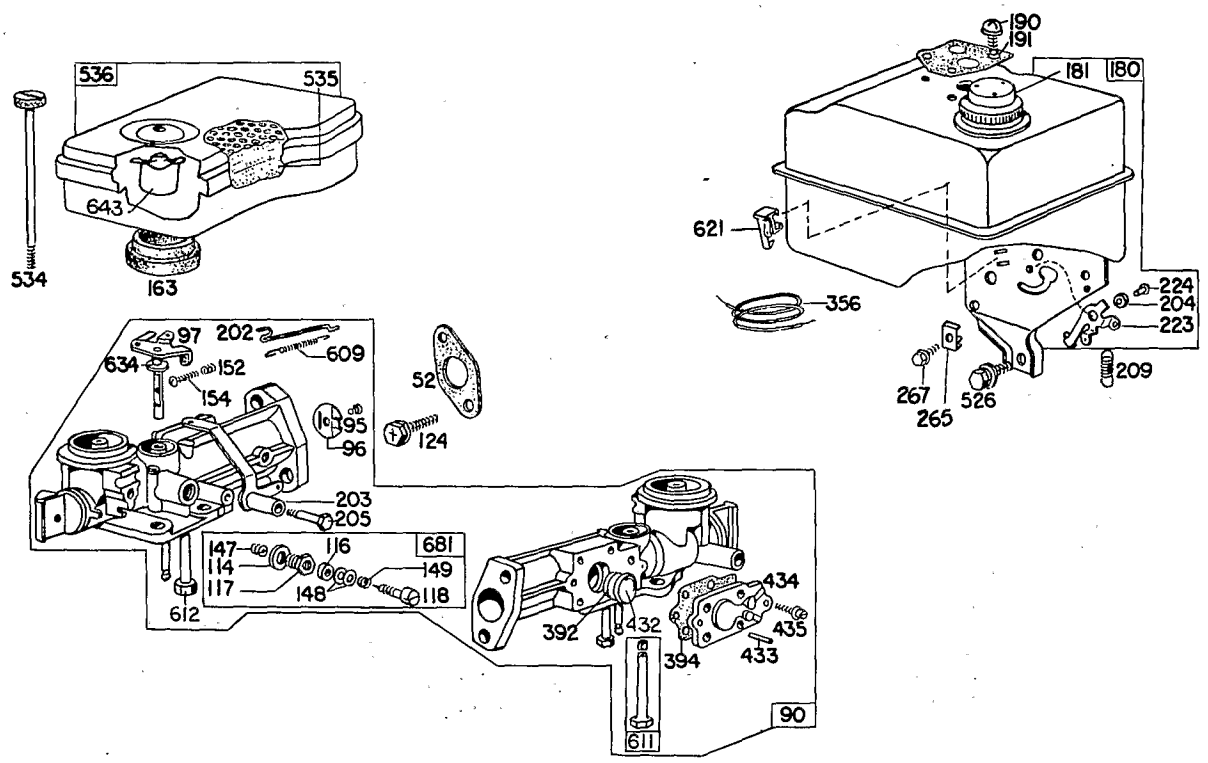

CARBURETOR ASSEMBLY

Ref. No.	Part No.	Description	No. Used
52	*27355	Gasket – Carburetor Mtg.	2
90	299437	Carburetor Assembly	1
95	93499	Screw – Throttle Valve To Shaft Sem	1
96	211203	Throttle – Carburetor	1
97	299212	Shaft & Lever – Throttle	1
114	66594	Gasket – Needle Valve Nut	1
116	65978	Packing – Needle Valve	1
117	230590	Nut – Needle Valve	1
118	23433	Valve – Needle	1
124	93357	Screw – Hex. Head	1
147	230591	Seat – Needle Valve	1
148	22235	Washer – Needle Valve	2
149	26336	Spring – Needle Valve	1
152	260575	Spring – Throttle Adjustment	1
154	93527	Screw – Machine, Rd. Hd. – 5-40 x 5/8	1
163	27660	Gasket – Air Cleaner Mtg.	1
180	297600	Tank Assembly – Fuel	1
181	392304	Cap – Fuel Tank	1
190	93341	Screw – Fuel Tank Mtg. Sem	1
191	*27911	Gasket – Fuel Tank Mtg.	2
202	260678	Link – Throttle	1
203	297718	Crank – Bell	1
204	230844	Bushing – Governor Lever (Flat)	1
205	93838	Screw – Shoulder	1

Ref. No.	Part No.	Description	No. Used
209	260695	Spring – Governor	1
223	221517	Lever – Governor Control	1
224	93491	Rivet – Governor Control Lever Mounting	1
265	221535	Clamp – Casing	1
267	93496	Screw – Sem	1
356	295413	Wire – Ground	1
392	260455	Spring – Fuel Pump Diaphragm	1
394	270026	Diaphragm	1
432	221377	Cap – Spring	1
433	93265	Pin – Diaphragm Cover	1
434	210959	Cover – Diaphragm	1
435	93141	Screw – Diaphragm Cover	1
526	93343	Screw – Tank Bracket Mtg. Sem	1
534	93322	Screw – Air Cleaner	1
535	27987	Element – Air Cleaner	1
536	297036	Cleaner Assembly – Air	1
609	260694	Spring – Throttle Link	1
611	391813	Fuel Pipe & Clip Assembly	1
612	296811	Pipe – Fuel	1
621	297472	Switch – Stop	1
634	270167	Washer, Throttle Shaft (Felt)	1
643	221321	Cup – Air Cleaner	1
681	299060	Needle Valve Kit	1

*Included in Gasket Set – Part No. 297615.

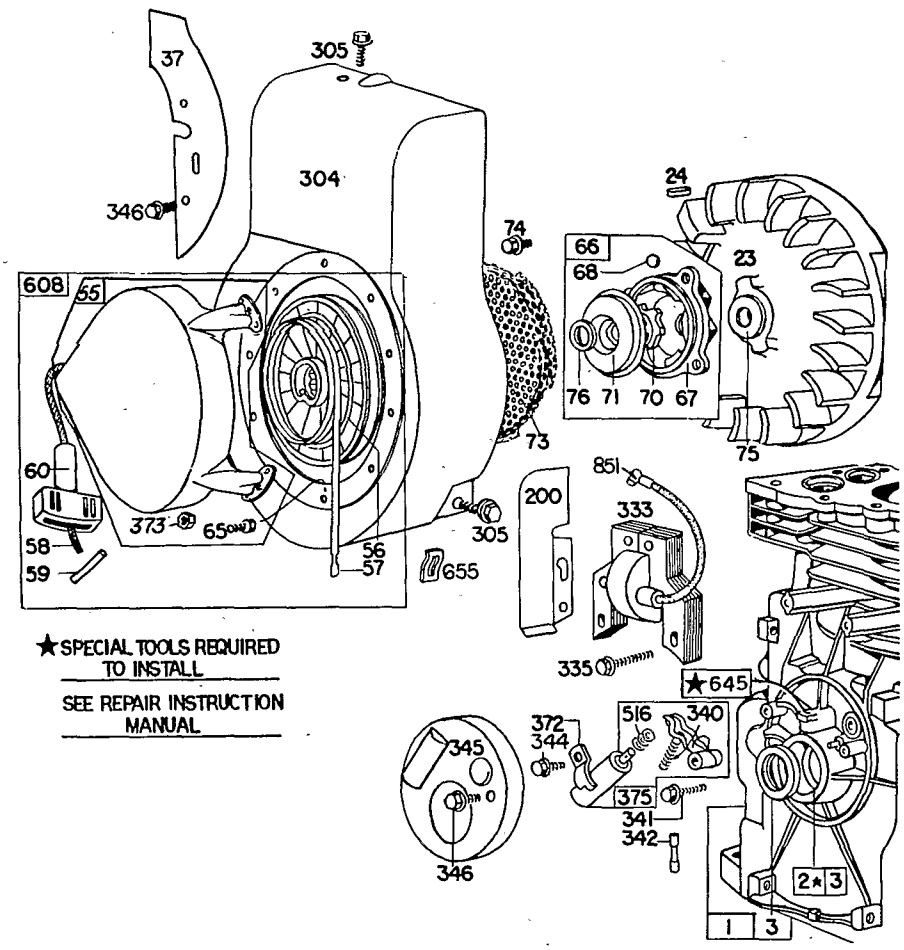

REWIND STARTER ASSEMBLY

Ref. No.	Part No.	Description	No. Used
1	391977	Cylinder Assembly	1
2	297565	Bushing — Cylinder **Note:** Requires Special Tools For Installation.	1
3	299819	Seal — Oil	1
23	297229	Flywheel — Magneto	1
24	61760	Key — Flywheel	1
		PISTON RING SETS: **Note:** For Chrome Piston Ring Set — Standard Size — Order Part No. 299742.	1
37	222443	Guard — Flywheel	1
55	390463	Housing — Rewind Starter	1
56	295871	Pulley — Rewind Starter (Incl. 63" long Rope) If longer rope is required, order Rope No. 66894 & cut to length.	1
57	294303	Spring — Rewind Starter	1
58	66884	Rope — Rewind Starter — 63" Long. (For Use W/Plastic Pulley) If Longer Rope Is Required, Order Rope No. 66894 And Cut To Length.	1
59	230228	Pin — Starter Grip	1
60	66728	Grip — Starter Rope	1
65	93067	Screw — Stamped Steel Housing Mtg. Sem	1
66	298310	Clutch Assy. — Rewind Starter	1
67	212131	Housing — Starter Clutch	1
68	63770	Ball — Clutch	1
70	298436	Ratchet — Rewind Starter	1
71	221653	Washer — Clutch Retainer	1

Ref. No.	Part No.	Description	No. Used
73	221923	Screen — Starter Pulley	1
74	93808	Screw — Sem	1
75	220865	Washer — Spring	1
76	68238	Washer — Ratchet Sealing	1
200	221480	Guide — Air	1
304	299410	Housing — Blower	1
305	93158	Screw — Blower Housing Mounting	1
333	298316	Armature — Magneto	1
335	93414	Screw — Armature Mtg. Sem	1
340	26018	Spring — Breaker Arm	1
341	93381	Screw — Breaker Arm Mounting Sem	1
342	65704	Plunger — Breaker Point	1
344	93042	Screw — Condenser Clamp Mounting Sem	1
345	220366	Cover — Breaker Point & Condenser	1
346	93705	Screw — Sem	1
372	220477	Clamp — Condenser	1
373	92987	Nut — Hex	1
375	294628	Breaker Points & Condenser Set **Note:** 299061 Ignition Kit Includes 294628 Set 65704 Plunger 61760 Key — Flywheel	1
516	260374	Spring — Connector	1
608	390463	Starter Assembly — Rewind	1
645	23513	Bushing — Plunger	1
655	222598	Anchor — Spring	1
851	221798	Cable Terminal — Ignition	1

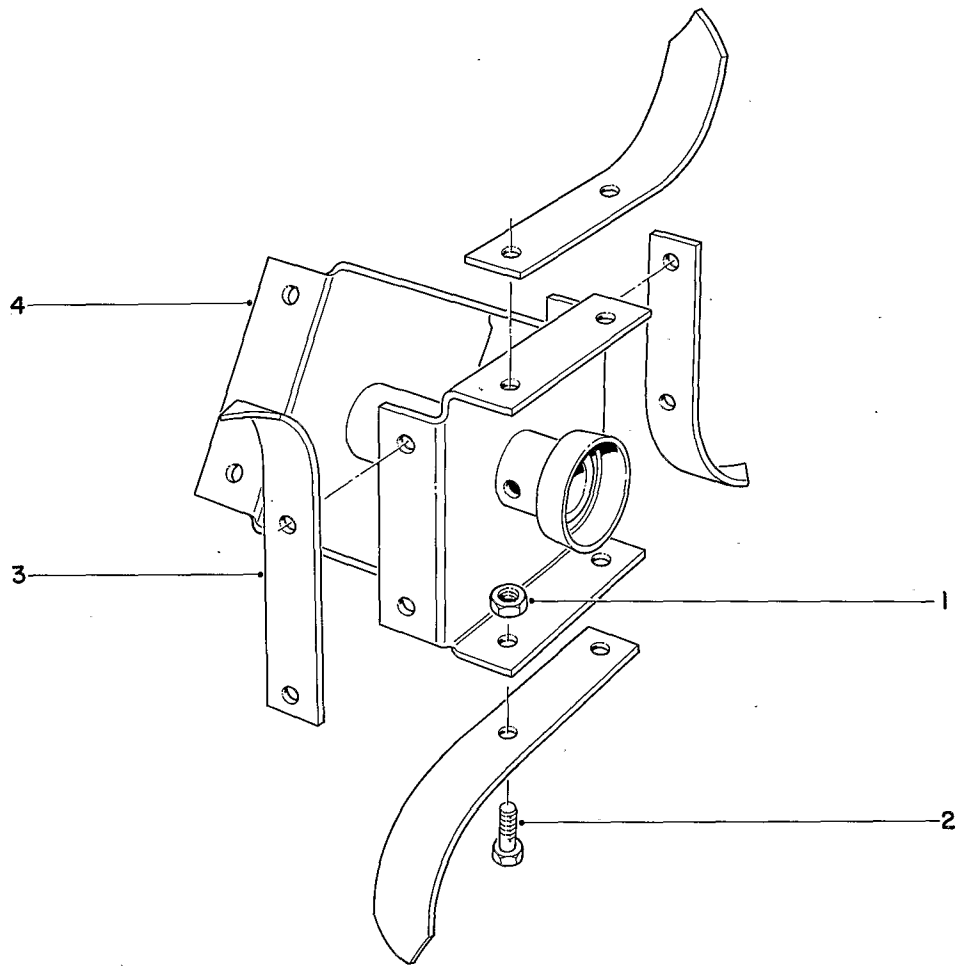

PICK TINE KIT MODEL NO. 17-8200 (Optional)

Ref. No.	Part No.	Description	No. Used
1	32152-2	Nut	32
2	323-4	Capscrew	32
3	17-8260	Pick Tine	16

Ref. No.	Part No.	Description	No. Used
4	18-8920	Axle Welded R.H.	1
*	17-8270	Axle Welded L.H.	1

*Not Illustrated

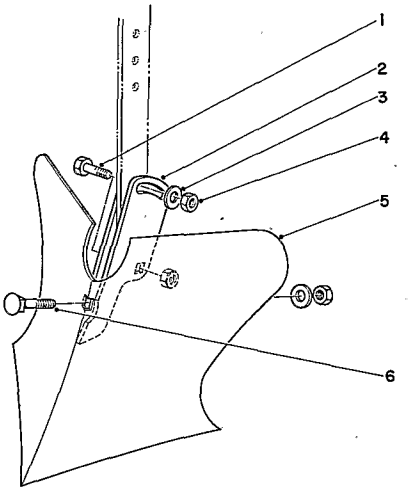

8" FURROWING TOOL MODEL NO. 59008 (Optional)

Ref. No.	Part No.	Description	No. Used
1	323-7	Capscrew	2
2	7-1512	Clamp	2
3	3256-4	Washer	2

Ref. No.	Part No.	Description	No. Used
4	3217-7	Nut	3
5	7-1491	Shovel	1
6	3236-10	Carriage Bolt	1

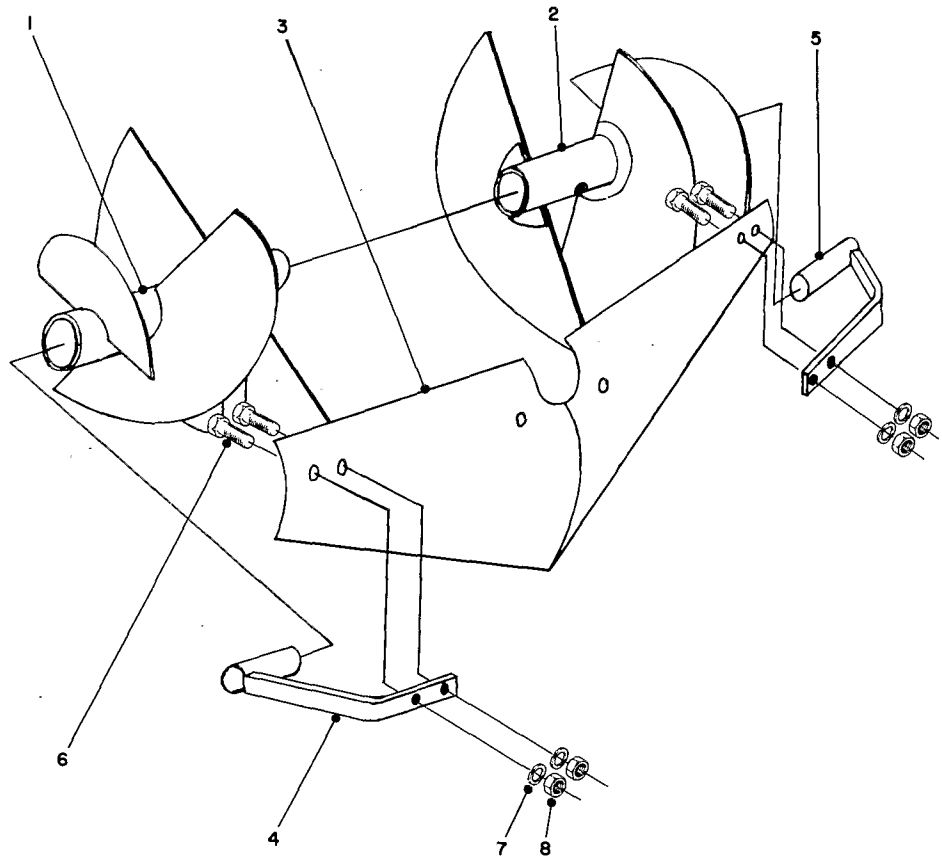

TIL-ROW ATTACHMENT MODEL NO. 59063 (Optional)

Ref. No.	Part No.	Description	No. Used
1	JT-1L	Cultivator Blade L.H.	1
2	JT-1R	Cultivator Blade R.H.	1
3	JT-3	Bedder Plate	1
4	JT-2L	Bedder Bracket L.H.	1
5	JT-2R	Bedder Bracket R.H.	1
6		Bolt 1/4 - 20 x 3/4	4
7		Lockwasher 1/4	4
8		Nut 1/4 - 20	4

When ordering repair parts be sure to specify Model B.

NOTE: Obtain repair parts from: Til-Row Inc.
14206 Industry
Houston, Texas 77405

HOME PRO™ by TORO®

A One Year Limited Warranty

The Toro Company promises to repair any HOME PRO Product if defective in materials or workmanship. The following time periods from the date of purchase apply:

Residential Product	1 Year
Residential Products Used Commercially . . .	45 Days

The costs of parts and labor are included, but the customer pays the transportation costs. Just return any residential product to an Authorized HOME PRO Service Dealer.

Should you feel your HOME PRO product is defective and wish to rely on The HOME PRO Warranty the following procedure is recommended.

1. Contact any Authorized HOME PRO Service Dealer. (The directory enclosed with your HOME PRO product contains a listing of these dealers).
2. He will either instruct you to return the product to him or recommend another Authorized HOME PRO Service outlet which might be more convenient.
3. Bring the product along with your original sales slip, or other evidence of purchase date, to the service dealer.
4. The servicing dealer will inspect the unit, advise you whether the product is defective and, if so, make all repairs necessary to correct the defect without extra charge to you.

If for any reason you are dissatisfied with the dealer's analysis of the defect or the service performed, or need other assistance you may contact us.

Write:

TORO Customer Service Department
8111 Lyndale Avenue South
Minneapolis, Minnesota 55420

The above remedy of product defects through repair by an Authorized HOME PRO Service Dealer is the purchaser's sole remedy for any defect.

THERE IS NO OTHER EXPRESS WARRANTY. ALL IMPLIED WARRANTIES OF MERCHANTABILITY AND FITNESS FOR USE ARE LIMITED TO THE DURATION OF THE EXPRESS WARRANTY.

Some states do not allow limitation on how long implied warranty lasts, so the above limitation may not apply to you.

This Warranty applies only to parts or components which are defective and does not cover repairs necessary due to normal wear, misuse, accidents, or lack of proper maintenance. Regular, routine maintenance of the unit to keep it in proper operating condition is the responsibility of the owner.

All warranty repairs reimbursable under the HOME PRO Warranty must be performed by an Authorized HOME PRO Service Dealer using Toro approved replacement parts.

Repairs or attempted repairs by anyone other than an Authorized HOME PRO Service Account are not reimbursable under the HOME PRO Warranty. In addition, these unauthorized repair attempts may result in additional malfunctions, the correction of which is not covered by the HOME PRO Warranty.

The Toro Company is not liable for indirect, incidental or consequential damages in connection with the use of the product including any cost or expense of providing substitute equipment or service during periods of malfunction or non-use.

Some states do not allow the exclusion of incidental or consequential damages, so the above exclusion may not apply to you.

This warranty gives you specific legal rights, and you may also have other rights which vary from state to state.

Compliance with Radio Interference Regulations Certified.
Certifie Conforme au Reglement sur le Brouillage Radioelectrique.

MAINTENANCE RECORD

Date	Hours Used	Oil Change	Air Cleaner Service	Check Spark Plug	Preparing For Storage	Comments

MAINTENANCE RECORD

Date	Hours Used	Oil Change	Air Cleaner Service	Check Spark Plug	Preparing For Storage	Comments

MAINTENANCE RECORD

Date	Hours Used	Oil Change	Air Cleaner Service	Check Spark Plug	Preparing For Storage	Comments