Form No. 3327-355

Greensmaster® 3050

Greensmaster Traction Unit

Model No. 04351—Serial No. 210000001 and Up

Operator’s Manual

CE

English (EN, GB)

Warning

The engine exhaust from this product contains chemicals known to the State of California to cause cancer, birth defects, or other reproductive harm.

Important The engine in this product is not equipped with a spark arrester muffler. It is a violation of California Public Resource Code Section 4442 to use or operate this engine on any forest-covered, brush-covered, or grass-covered land as defined in CPRC 4126. Other states or federal areas may have similar laws.

This spark ignition system complies with Canadian ICES-002.

Ce système d'allumage par étincelle de véhicule est conforme à la norme NMB-002 du Canada.

The enclosed Engine Owner's Manual is supplied for information regarding The U.S. Environmental Protection Agency (EPA) and the California Emission Control Regulation of emission systems, maintenance and warranty.

Keep this engine Owner's Manual with your unit. Should this engine Owner's Manual become damaged or illegible, replace immediately. Replacements may be ordered through the engine manufacturer.

Contents

	Page
Introduction	3
Safety	3
Safe Operating Practices	3
Toro Riding Mower Safety	5
Sound Pressure	6
Sound Power	6
Vibration	6
Safety and Instruction Decals	7
Specifications	9
General Specifications	9
Accessories	9
Setup	10
Loose Parts	10
Activating and Charging the Battery	11
Installing the Rear Wheel Assembly	11
Mounting the Seat	12
Securing the Steering Arm	12
Mounting the Cover	12
Installing the Battery	13
Installing the Cutting Units	13
Rear Ballast	15
Before Operating	16
Checking the Engine Oil	16
Filling the Gas Tank	16
Servicing the Hydraulic System	17
Tire Pressure	18
Checking the Torque of the Wheel Nuts	18
Operation	18
Think Safety First	18
Controls	19
Break-in Period	20
Starting the Engine	21
Checking the Interlock System	21
Preparing the Machine for Mowing	22
Training Period	22
Before Mowing	23
Mowing Procedures	23
Transport Operation	24
Inspection and Cleanup After Mowing	24
Maintenance	24
Recommended Maintenance Schedule	24
Daily Maintenance Checklist	25
Lubrication	26
Changing the Engine Oil and Filter	27
Servicing the Air Cleaner	28
Adjusting the Throttle Control	28
Adjusting the Choke Control	29
Adjusting the Carburetor and Speed Control	29
Replacing the Spark Plugs	29
Replacing the Fuel Filter	30
Changing the Hydraulic Oil and Filter	30
Checking the Hydraulic Lines and Hoses	31
Adjusting the Brakes	31
Adjusting the Rear Camshaft	31
Adjusting the Lift and Mow Pedal Height	32
Leveling the Lift and Mow Pedals	32
Adjusting the Traction Pedal	33
Adjusting Cutting Unit Lift and Drop	33
Adjusting the Lift Cylinders	33
Replacing the Seat Switch	34
Replacing the Traction Switch	34
Replacing the Mow/Lift Switch	34
Adjusting the Traction Return Linkage	35
Servicing the Steering Assembly	35
Battery Care	36
Storage	36
Electrical Schematic	37
Hydraulic Schematic	38
Troubleshooting	39
The Toro General Commercial Products Warranty	44

© 2002 by The Toro Company

8111 Lyndale Avenue South
Bloomington, MN 55420-1196

All Rights Reserved

Printed in the USA

Introduction

Read this manual carefully to learn how to operate and maintain your product properly. The information in this manual can help you and others avoid injury and product damage. Although Toro designs and produces safe products, you are responsible for operating the product properly and safely.

Whenever you need service, genuine Toro parts, or additional information, contact an Authorized Service Dealer or Toro Customer Service and have the model and serial numbers of your product ready. Figure 1 illustrates the location of the model and serial numbers on the product.

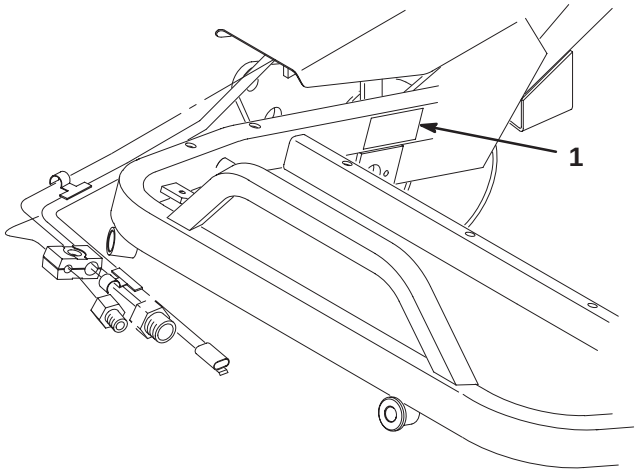

Figure 1

1. Location of the model and serial numbers

Write the product model and serial numbers in the space below:

Model No. _____

Serial No. _____

This manual identifies potential hazards and has special safety messages that help you and others avoid personal injury and even death. ***Danger***, ***Warning***, and ***Caution*** are signal words used to identify the level of hazard. However, regardless of the hazard, be extremely careful.

Danger signals an extreme hazard that *will* cause serious injury or death if you do not follow the recommended precautions.

Warning signals a hazard that *may* cause serious injury or death if you do not follow the recommended precautions.

Caution signals a hazard that may cause minor or moderate injury if you do not follow the recommended precautions.

This manual uses two other words to highlight information. **Important** calls attention to special mechanical information and **Note:** emphasizes general information worthy of special attention.

Safety

This machine meets or exceeds CEN standard EN 836:1997, ISO standard 5395:1990, and ANSI B71.4-1999 specifications in effect at the time of production when 40 lb. of ballast is added to the rear wheel.

Improper use or maintenance by the operator or owner can result in injury. To reduce the potential for injury, comply with these safety instructions and always pay attention to the safety alert ⚠ symbol, which means CAUTION, WARNING, or DANGER—"personal safety instruction." Failure to comply with the instruction may result in personal injury or death.

Safe Operating Practices

The following instructions are from the CEN standard EN 836:1997, ISO standard 5395:1990, and ANSI B71.4-1999.

Training

- Read the operator's manual and other training material carefully. Be familiar with the controls, safety signs, and the proper use of the equipment.
- Never allow children or people unfamiliar with these instructions to use or service the mower. Local regulations may restrict the age of the operator.
- Never mow while people, especially children, or pets are nearby.
- Keep in mind that the operator or user is responsible for accidents or hazards occurring to other people or their property.
- Do not carry passengers.
- All drivers and mechanics should seek and obtain professional and practical instruction. The owner is responsible for training the users. Such instruction should emphasize:
  - the need for care and concentration when working with ride-on machines;
  - control of a ride-on machine sliding on a slope will not be regained by the application of the brake. The main reasons for loss of control are:
    - insufficient wheel grip;
    - being driven too fast;
    - inadequate braking;

- the type of machine is unsuitable for its task;
- lack of awareness of the effect of ground conditions, especially slopes;
- incorrect hitching and load distribution.

- The owner/user can prevent and is responsible for accidents or injuries occurring to himself or herself, other people, or property.

Preparation

- While mowing, always wear substantial footwear, long trousers, hard hat, safety glasses, and ear protection. Long hair, loose clothing, or jewelry may get tangled in moving parts. Do not operate the equipment when barefoot or wearing open sandals.
- Thoroughly inspect the area where the equipment is to be used and remove all objects which may be thrown by the machine.
- **Warning**—Fuel is highly flammable. Take the following precautions:
  - Store fuel in containers specifically designed for this purpose.
  - Refuel outdoors only and do not smoke while refuelling.
  - Add fuel before starting the engine. Never remove the cap of the fuel tank or add fuel while the engine is running or when the engine is hot.
  - If fuel is spilled, do not attempt to start the engine but move the machine away from the area of spillage and avoid creating any source of ignition until fuel vapors have dissipated.
  - Replace all fuel tanks and container caps securely.
- Replace faulty silencers/mufflers.
- Evaluate the terrain to determine what accessories and attachments are needed to properly and safely perform the job. Only use accessories and attachments approved by the manufacturer.
- Check that operator's presence controls, safety switches and shields are attached and functioning properly. Do not operate unless they are functioning properly.

Operation

- Do not operate the engine in a confined space where dangerous carbon monoxide fumes can collect.
- Mow only in daylight or in good artificial light.
- Before attempting to start the engine, disengage all blade attachment clutches, shift into neutral, and engage the parking brake.
- Do not use on slopes of more than
  - 5° when mowing on side hills;
  - 10° when mowing uphill;
  - 15° when mowing downhill.
- Remember there is no such thing as a safe slope. Travel on grass slopes requires particular care. To guard against overturning:
  - do not stop or start suddenly when going up or downhill;
  - engage clutch slowly, always keep machine in gear, especially when travelling downhill;
  - machine speeds should be kept low on slopes and during tight turns;
  - stay alert for humps and hollows and other hidden hazards;
  - never mow across the face of the slope, unless the mower is designed for this purpose.
- Stay alert for holes in the terrain and other hidden hazards.
- Use care when pulling loads or using heavy equipment.
  - Use only approved drawbar hitch points.
  - Limit loads to those you can safely control.
  - Do not turn sharply. Use care when reversing.
  - Use counterweight(s) or wheel weights when suggested in the operator's manual.
- Watch out for traffic when crossing or near roadways.
- Stop the blades rotating before crossing surfaces other than grass.
- When using any attachments, never direct discharge of material toward bystanders nor allow anyone near the machine while in operation.
- Never operate the machine with damaged guards, shields, or without safety protective devices in place. Be sure all interlocks are attached, adjusted properly, and functioning properly.
- Do not change the engine governor settings or overspeed the engine. Operating the engine at excessive speed may increase the hazard of personal injury.
- Before leaving the operator's position:
  - stop on level ground;
  - disengage the power take-off and lower the attachments;
  - change into neutral and set the parking brake;
  - stop the engine and remove the key.

- Disengage drive to attachments when transporting or not in use.
- Stop the engine and disengage drive to attachment
  - before refuelling;
  - before removing the grass catcher/catchers;
  - before making height adjustment unless adjustment can be made from the operator's position.
  - before clearing blockages;
  - before checking, cleaning or working on the mower;
  - after striking a foreign object or if an abnormal vibration occurs. Inspect the mower for damage and make repairs before restarting and operating the equipment.
- Reduce the throttle setting during engine run-out and, if the engine is provided with a shut-off valve, turn the fuel off at the conclusion of mowing.
- Keep hands and feet away from the cutting units.
- Look behind and down before backing up to be sure of a clear path.
- Slow down and use caution when making turns and crossing roads and sidewalks. Stop cylinders/reels if not mowing.
- Do not operate the mower under the influence of alcohol or drugs.
- Use care when loading or unloading the machine into a trailer or truck.
- Use care when approaching blind corners, shrubs, trees, or other objects that may obscure vision.

Maintenance and Storage

- Keep all nuts, bolts and screws tight to be sure the equipment is in safe working condition.
- Never store the equipment with fuel in the tank inside a building where fumes may reach an open flame or spark.
- Allow the engine to cool before storing in any enclosure.
- To reduce the fire hazard, keep the engine, silencer/muffler, battery compartment and fuel storage area free of grass, leaves, or excessive grease.
- Check the grass catcher frequently for wear or deterioration.
- Keep all parts in good working condition and all hardware and hydraulic fittings tightened. Replace all worn or damaged parts and decals.
- If the fuel tank has to be drained, do this outdoors.
- Be careful during adjustment of the machine to prevent entrapment of the fingers between moving blades and fixed parts of the machine.
- On multi-cylinder/multi-reel machines, take care as rotating one cylinder/reel can cause other cylinders/reels to rotate.
- Disengage drives, lower the cutting units, set parking brake, stop engine and remove key and disconnect spark plug wire. Wait for all movement to stop before adjusting, cleaning or repairing.
- Clean grass and debris from cutting units, drives, silencers/mufflers, and engine to help prevent fires. Clean up oil or fuel spillage.
- Use jack stands to support components when required.
- Carefully release pressure from components with stored energy.
- Disconnect battery and remove spark plug wire before making any repairs. Disconnect the negative terminal first and the positive last. Reconnect positive first and negative last.
- Use care when checking the cylinders/reels. Wear gloves and use caution when servicing them.
- Keep hands and feet away from moving parts. If possible, do not make adjustments with the engine running.
- Charge batteries in an open well ventilated area, away from spark and flames. Unplug charger before connecting or disconnecting from battery. Wear protective clothing and use insulated tools.

Toro Riding Mower Safety

The following list contains safety information specific to Toro products or other safety information that you must know that is not included in the CEN, ISO, or ANSI standard.

This product is capable of amputating hands and feet and throwing objects. Always follow all safety instructions to avoid serious injury or death.

Use of this product for purposes other than its intended use could prove dangerous to user and bystanders.

Warning

Engine exhaust contains carbon monoxide, which is an odorless, deadly poison that can kill you.

Do not run engine indoors or in an enclosed area.

- Know how to stop the engine quickly.

- Do not operate the machine while wearing tennis shoes or sneakers.
- Wearing safety shoes and long pants is advisable and required by some local ordinances and insurance regulations.
- Handle fuel carefully. Wipe up any spills.
- Check the safety interlock switches daily for proper operation. If a switch should fail, replace the switch before operating the machine. After every two years, replace all four interlock switches in the safety system, whether they are working properly or not.
- Before starting the engine, sit on the seat.
- Using the machine demands attention. To prevent loss of control:
  - Do not drive close to sand traps, ditches, creeks, or other hazards.
  - Reduce speed when making sharp turns. Avoid sudden stops and starts.
  - When near or crossing roads, always yield the right-of-way.
  - Apply the service brakes when going downhill to keep forward speed slow and to maintain control of the machine.
- The grass baskets must be in place during operation of the cylinders/reels or thatchers for maximum safety. Shut the engine off before emptying the baskets.
- Raise the cutting units when driving from one work area to another.
- Do not touch the engine, silencer/muffler, or exhaust pipe while the engine is running or soon after it has stopped because these areas could be hot enough to cause burns.
- Stay clear of the rotating screen at the side of the engine to prevent direct contact with your body or clothing.
- If the engine stalls or loses headway and cannot make it to the top of a slope, do not turn the machine around. Always back slowly, straight down the slope.
- When a person or pet appears unexpectedly in or near the mowing area, **stop mowing.** Careless operation, combined with terrain angles, ricochets, or improperly positioned guards can lead to thrown object injuries. Do not resume mowing until the area is cleared.

Maintenance and Storage

- Make sure all hydraulic line connectors are tight and all hydraulic hoses and lines are in good condition before applying pressure to the system.
- Keep your body and hands away from pin hole leaks or nozzles that eject hydraulic fluid under high pressure. Use paper or cardboard, not your hands, to search for leaks. Hydraulic fluid escaping under pressure can have sufficient force to penetrate the skin and cause serious injury. Seek immediate medical attention if fluid is injected into skin.
- Before disconnecting or performing any work on the hydraulic system, all pressure in the system must be relieved by stopping the engine and lowering the cutting units and attachments to the ground.
- Check all fuel lines for tightness and wear on a regular basis. Tighten or repair them as needed.
- If the engine must be running to perform a maintenance adjustment, keep hands, feet, clothing, and any parts of the body away from the cutting units, attachments, and any moving parts, especially the screen at the side of the engine. Keep everyone away.
- To ensure safety and accuracy, have an Authorized Toro Distributor check the maximum engine speed with a tachometer. Maximum governed engine speed should be 2900 RPM.
- If major repairs are ever needed or if assistance is desired, contact an Authorized Toro Distributor.
- Use only Toro-approved attachments and replacement parts. The warranty may be voided if used with unapproved attachments.

Sound Pressure

This unit has a maximum sound pressure level at the operator's ear of 82 dBA, based on measurements of identical machines per Directive 98/37/EC.

Sound Power

This unit has a guaranteed sound power level of 105 dBA, based on measurements of identical machines per Directive 2000/14/EC.

Vibration

This unit does not exceed a hand/arm vibration level of 2.5 m/s^2, based on measurements of identical machines per Directive 98/37/EC.

This unit does not exceed a whole body vibration level of 0.5 m/s^2, based on measurements of identical machines per Directive 98/37/EC.

Safety and Instruction Decals

Safety decals and instructions are easily visible to the operator and are located near any area of potential danger. Replace any decal that is damaged or lost.

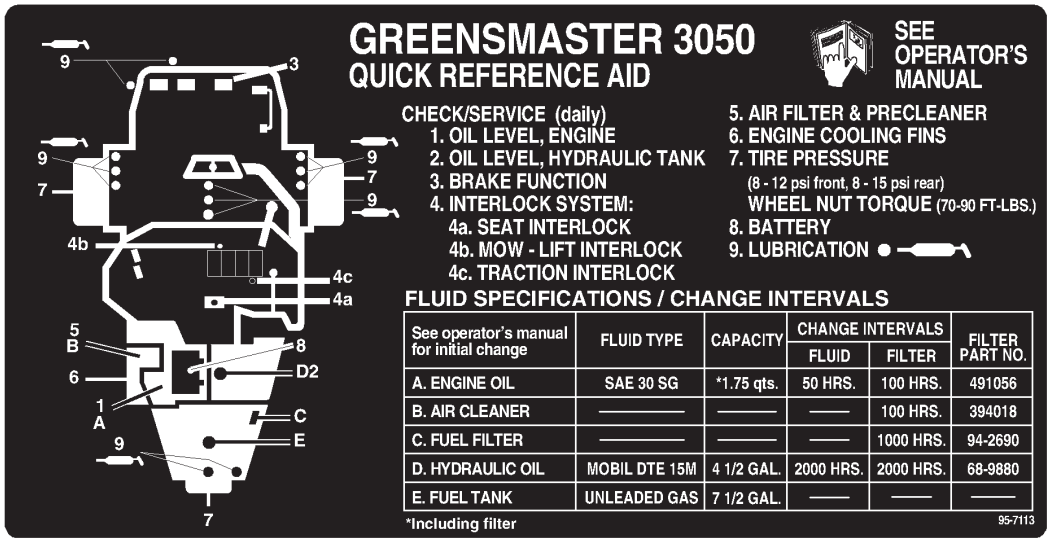

95-7113

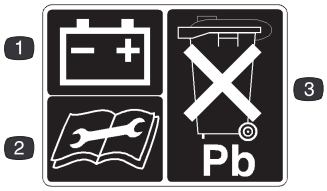

93-6668

1. Battery
2. Read the instructions before servicing or performing maintenance.
3. Contains lead; do not discard.

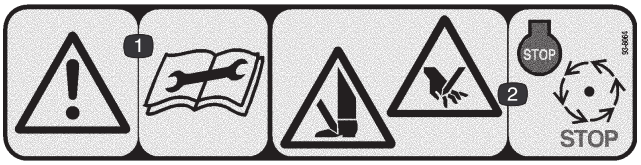

93-8064 (for CE)

1. Warning—read the instructions before servicing or performing maintenance.
2. Cutting hazard of foot or hand—stop the engine and wait for moving parts to stop.

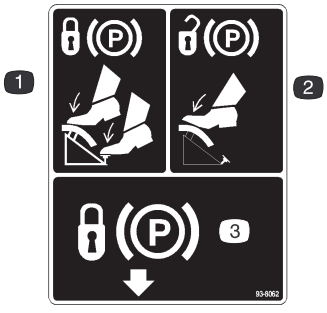

93-8062

1. To lock the parking brake, press the brake pedal and the parking brake lock.
2. To unlock the parking brake, press the brake pedal.
3. Parking brake lock



62–5070



93-8067

1. Hydraulic oil
2. Read the *Operator's Manual.*

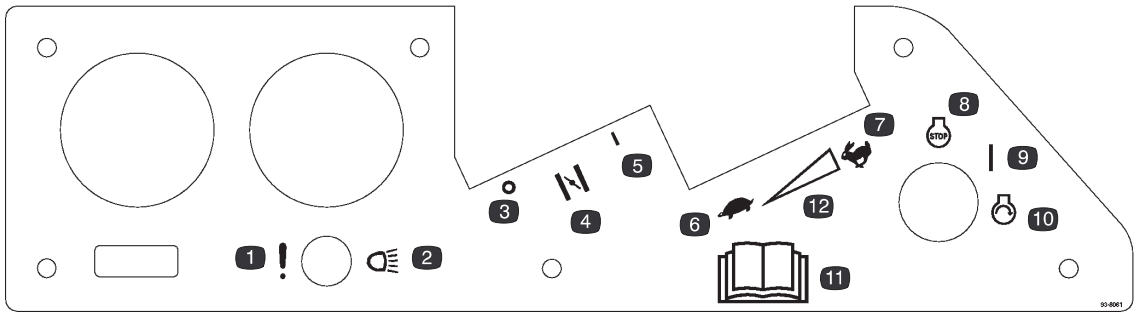

93-8061 (Replace control panel)

1. Failure/malfunction (Leak detector alarm test)
2. Headlights
3. Off
4. Choke
5. On
6. Slow
7. Fast
8. Engine—stop
9. On
10. Engine—start
11. Read the *Operator's Manual.*
12. Continuous variable setting



104-2053

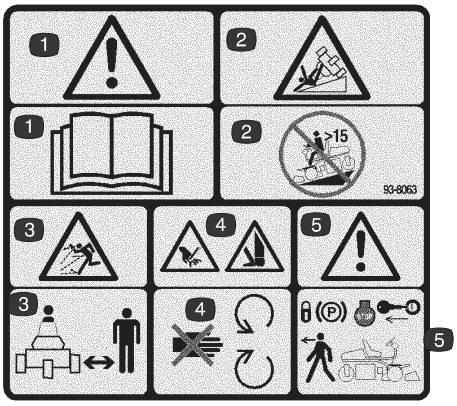

93-8063 (for CE)

1. Warning—read the *Operator's Manual.*
2. Tipping hazard—do not use the machine on a slope greater than 15 degrees.
3. Thrown object hazard—stay a safe distance from the machine.
4. Cutting hazard of hand or foot—stay away from moving parts.
5. Warning—lock the parking brake, stop the engine, and remove the ignition key before leaving the machine.

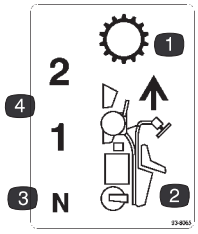

93-8065

1. Transmission
2. Forward motion
3. Neutral
4. Forward speeds

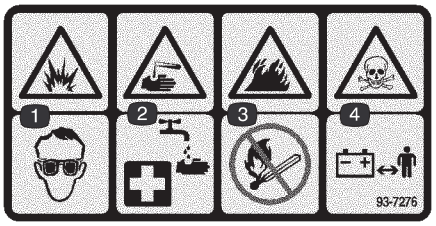

93-7276

1. Explosion hazard—wear eye protection.
2. Caustic liquid/chemical burn hazard—to perform first aid, flush with water.
3. Fire hazard—no fire, open flames, or smoking.
4. Poison hazard—keep children a safe distance from the battery.

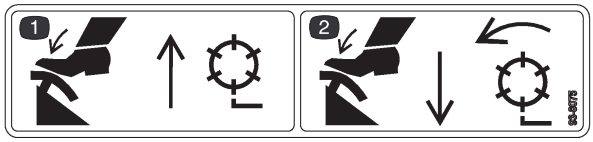

93-8075

1. Press the lift pedal to raise and stop the reels.
2. Press the mow pedal to lower and start the reels.



93-6691

1. Read the *Operator's Manual.*

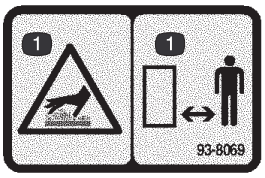

93-8069

1. Hot surface/burn hazard—stay a safe distance from the hot surface.

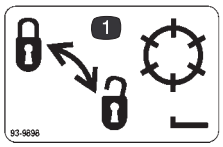

93-9898

1. Lock and unlock the reels

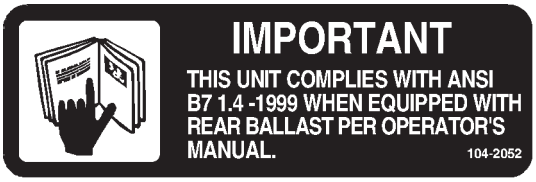

104-2052

Specifications

Note: Specifications and design subject to change without notice.

General Specifications

Width of Cut	59 in. (149.9 cm)
Wheel Tread	49-1/2 in. (125.7 cm)
Wheel Base	46-7/8 in. (119.1 cm)
Overall Length	90 in. (228.6 cm)
Overall Width	69-3/4 in. (117.2 cm)
Overall Height	48-1/2 in. (123.2 cm)
Net Weight (wet)	930 lb. (422 kg)
Weight with Reels	1173 lb. (532 kg)
1st Gear Speed	3.8 MPH approx. (6.1 km/h)
2nd Gear Speed	8.1 MPH approx. (13.0 km/h)
Reverse Speed	1.9 MPH approx. (3.1 km/h)
Reel Speed	1975 RPM approx.
Clip Speed—11 Blade Cutting Unit	0.18 in. approx. (4.6 mm)
Clip Speed—8 Blade Cutting Unit	0.25 in. approx. (6.4 mm)

Accessories

8 Blade, 4 Bolt Cutting Unit (Heavy Duty)	Model No. 04404
8 Blade, 4 Bolt Cutting Unit	Model No. 04408
11 Blade, 4 Bolt Cutting Unit	Model No. 04406
8 Blade, SPA Cutting Unit	Model No. 04468
11 Blade, SPA Cutting Unit	Model No. 04450
8 Blade, 4 Bolt Cutting Unit	Model No. 04470
11 Blade, 4 Bolt Cutting Unit	Model No. 04471
8 Blade, SPA Cutting Unit	Model No. 04472
11 Blade, SPA Cutting Unit	Model No. 04473
Spiker	Model No. 04494
Tri-Roller	Model No. 04495
Groomer Kit (for use with cutting unit models 04470, 04471, 04472, and 04473)	Model No. 04456
Grooming Reel Kit (for use with cutting unit models 04404, 04408, 04406, 04468, and 04450)	Model No. 04455
Thatching Reels	Model No. 04493
Variable Traction Speed Kit	Model No. 04422
Individual Reel Shut Off Kit	Part No. 28-2150
Basket Reinforcement Kit	Part No. 26-0900
Backlapping Kit	Part No. 92-9656
Spark Arrester	Part No. 83-2240
High Altitude Jet*	Part No. 805537

* Order from your local Briggs & Stratton Dealer

Setup

Note: Determine the left and right sides of the machine from the normal operating position.

Loose Parts

Description	Qty.	Use
Seat Nut, 5/16 in. Seat cover	1 4 1	Mounting the seat slide and seat cover to the seat base
Wheel assembly Rear spindle spacer	1 2	Mounting the rear wheel
Capscrew, 1/2 x 3/4 in. Washer, 1/2 in.	1 1	Securing the steering arm
Cover Socket head screw, 1/4 x 3/4 in. Locknut, 1/4 in. Washer, 1/4 in. Self tapping screw	1 1 1 1 2	Mounting the cover
Capscrew, 1/4 x 5/8 in. Nut, 1/4 in.	2 2	Securing the battery cables to the battery
Gauge bar Machine screw, #10 x 7/8 in. Jam nut, #10 in.	1 1 1	Setting the height of cut
Grass basket	3	Mounts to the pull frame
Ignition keys	2	
Service decal	11	Affix the appropriate language decal over English decal 95-7113.
Parts Catalog Noise certificate Pre-delivery sheet Certificate of compliance	1 1 1 1	
Operator video	1	Watch before operating the machine.
Operator's Manual (traction unit) Engine manual	2 1	Read before operating the machine.
Registration card (traction unit) Registration card (cutting unit)	1 1	Fill out and return to Toro.

Note: Mounting fasteners for the Greensmaster 3050 cutting unit are included with the cutting units.

Activating and Charging the Battery

Warning

Battery posts, terminals, and related accessories contain lead and lead compounds, chemicals known to the State of California to cause cancer and reproductive harm. *Wash hands after handling.*

Voltage: 12 v, 32 amp. hour

1. Remove the wing nuts, washers, and battery clamp and lift out the battery.
2. Remove the filler caps from the battery and slowly fill each cell until the electrolyte is up to the fill line.

Danger

Battery electrolyte contains sulfuric acid which is a deadly poison and causes severe burns.

- **Do not drink electrolyte and avoid contact with skin, eyes or clothing. Wear safety glasses to shield your eyes and rubber gloves to protect your hands.**
- **Fill the battery where clean water is always available for flushing the skin.**

3. Replace the filler caps and connect a battery charger to the battery posts. Charge the battery at a rate of 3 to 4 amperes for 4 to 8 hours.

Warning

Charging the battery produces gasses that can explode.

Never smoke near the battery and keep sparks and flames away from battery.

4. When the battery is charged, disconnect the charger from the electrical outlet and battery posts, and allow the battery to sit for 5–10 minutes.
5. Remove the filler caps. Slowly add electrolyte to each cell until the level is up to the fill line. Install the filler caps.

Important Do not overfill the battery. Electrolyte will overflow onto other parts of the machine and sever corrosion and deterioration will result.

Installing the Rear Wheel Assembly

1. Remove the bolt and locknut from the wheel mount holes in the rear castor fork (Fig. 2).
2. Install the rear wheel in the castor fork. Insert the bolt into one of the mounting holes, install a spacer, and slide the bolt through the wheel (Fig. 2).

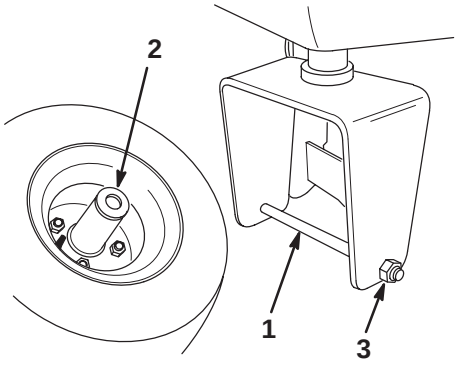

Figure 2

1. Bolt
2. Spacer
3. Locknut

3. Install another spacer onto the bolt and route the bolt through the remaining castor fork mounting hole.
4. Position the bend of the bolt head under the bottom edge of the castor fork. Install and tighten the locknut to secure the wheel to the castor fork (Fig. 3).
5. Wipe the grease fitting clean on the wheel assembly. Pump grease into the wheel hub until grease is seen exiting at both hub bearings, thus ensuring the wheel hub cavity is full. Wipe up any excess grease.

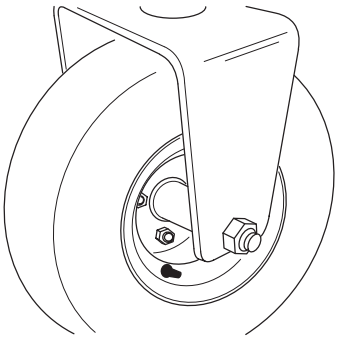

Figure 3

Mounting the Seat

Note: Mount the seat slides in the front set of mounting holes to gain an additional 3 in. (7.6 cm) in the forward adjustment, or in the rear mounting holes for an additional 3 in. (7.6 cm) in the rearward adjustment.

1. Support the seat base in the up position with the seat support rod.
2. Remove the locknuts securing the seat slides to the plywood shipping base. Discard the locknuts.
3. Secure the seat, seat panel, and seat slides to the seat support with the locknuts (5/16 in.) (Fig. 4) supplied in the loose parts. Mount the seat panel on the right side, positioned as shown in Figure 4.

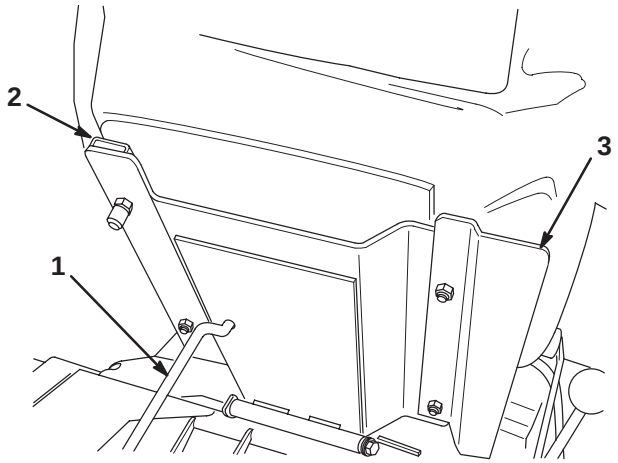

Figure 4

1. Seat support rod
2. Seat slide
3. Seat panel

Securing the Steering Arm

1. Remove the capscrew (1/2 x 3/4 in.) and washer (1/2 in.) mounted to the outside of the steering arm frame bracket.
2. Pivot the steering arm upward, aligning the mounting holes in the arm with the holes in the frame bracket.
3. Select the desired mounting hole for operator comfort and secure the arm with 2 capscrews (1/2 x 3/4 in.) and washers (1/2 in.) (one each in loose parts) (Fig. 5).

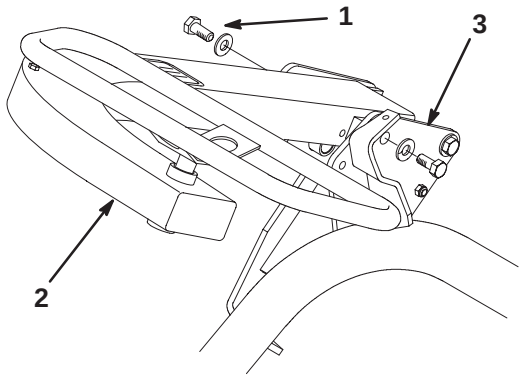

Figure 5

1. Capscrew and washer
2. Steering arm
3. Frame bracket

Mounting the Cover

1. Align the cover mounting holes with the holes in the frame tube and mounting bracket (Fig. 6).

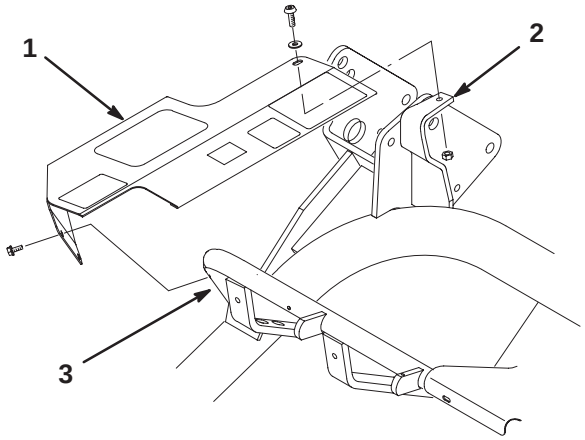

Figure 6

Shown with steering arm removed

1. Cover
2. Mounting bracket
3. Frame tube

2. Loosely secure the rear of the cover to the top of the mounting bracket with a socket head screw (1/4 x 3/4 in.), washer (1/4 in.), and a locknut (1/4 in.) (Fig. 6).
3. Loosely secure the front of the cover to the frame tube with two self tapping screws (Fig. 6). Tighten all of the cover mounting fasteners.

Installing the Battery

1. Mount the battery with the battery terminals toward the hydraulic tank on the machine.

Warning

Battery terminals or metal tools could short against metal tractor components causing sparks. Sparks can cause the battery gasses to explode, resulting in personal injury.

- **When removing or installing the battery, do not allow the battery terminals to touch any metal parts of the tractor.**
- **Do not allow metal tools to short between the battery terminals and metal parts of the tractor.**

2. Connect the positive battery cable (red) from the starter solenoid to the positive post (+) of the battery (Fig. 7). Secure it with a wrench and coat the terminal with petroleum jelly. Make sure the cable will clear the seat, in the rear-most position, which could cause wear or damage to the cable.

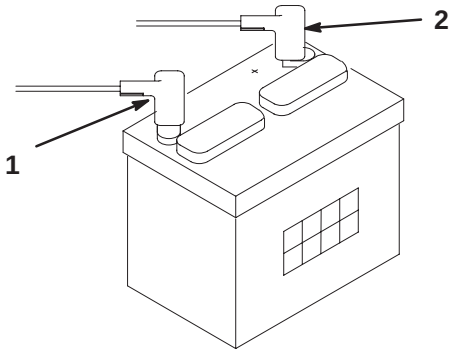

Figure 7

1. Negative (–)
2. Positive (+)

3. Connect the black ground cable from the engine base to the negative (–) post of the battery. Secure it with a wrench and coat the terminal with petroleum jelly.
4. Install the battery clamp and washers and secure them with the wing nuts.
5. Place the terminal cover over the positive (+) and negative (–) battery posts.

Installing the Cutting Units

For Cutting Unit Models 04404, 04406, 04408, 04450, and 04468

Note: When sharpening, setting the height-of-cut, or performing other maintenance procedures on the cutting units, store the cutting unit reel motors in the support tubes on the front of the frame to prevent damage to the hoses.

1. Remove the cutting units from the cartons. Assemble and adjust them per the cutting unit Operator's Manual. Use the gauge bar from the loose parts kit to adjust the height of cut.
2. Slide the cutting units under the pull frames and position the hoop on the top of cutting units over the lift arms (Fig. 8).

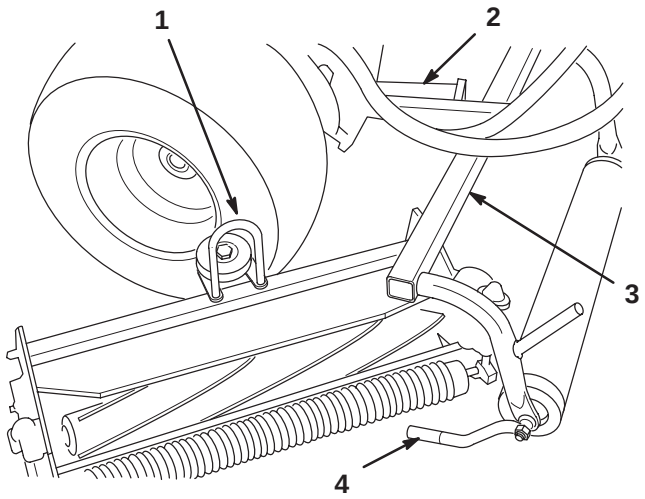

Figure 8

1. Hoop
2. Lift arm
3. Pull frame
4. Pull arm

3. Assemble the mount nuts for the reel drive motor to each cutting unit. Leave approximately 1/2 in. (13 mm) of threads exposed on each mount stud (Fig. 9).

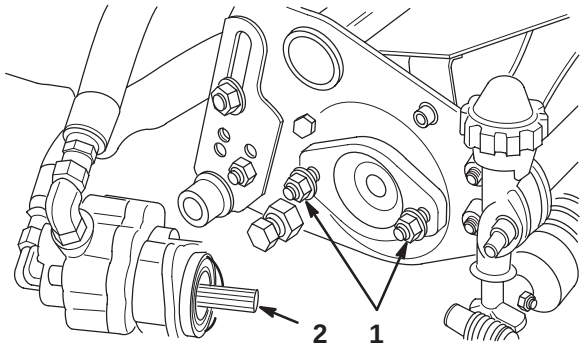

Figure 9

1. Motor mount nuts
2. Coat with grease

4. Remove the protective covers from the cutting units and the reel drive motor shafts. Coat the spline shaft of the motor with clean grease and install the motor by rotating the motor clockwise so the motor flanges clear the studs. Rotate the motor counterclockwise until the flanges are encircling the studs and tighten the mounting nuts (Fig. 9).

Note: Retain the protective covers for the cutting units. Install them whenever the reel drive motors are removed to protect the cutting unit bearings from contamination.

5. Slide the sleeve back on the ball joint and rotate the pull arm down so the socket fits over the ball stud. Release the sleeve so it slides over the stud and locks the assemblies together (Fig. 10).

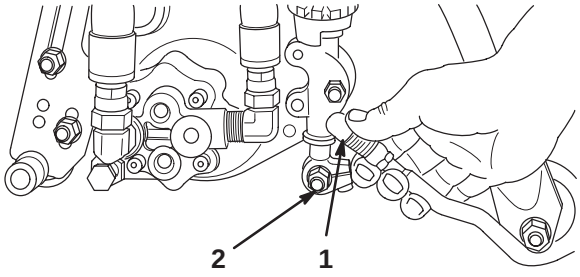

Figure 10

1. Slide back to mount
2. Ball stud

6. Mount the baskets on the pull frames, loosen the jam nuts on the pull arms, and adjust the ball sockets until there is 1/4 to 1/2 in. (6.4 to 12.7 mm) clearance between the lip of the basket and the reel blades (Fig. 11).

Note: This prevents the basket from tipping the cutting unit forward, causing the hoop to come off of the lift arm while in the mowing operation.

Note: Be sure the basket lips are equidistant from the reel blades across each reel. If the basket is too close to the reel, it is possible for the reel to contact the basket when the cutting unit is raised off of the ground.

7. Align the sockets in the ball joints so the open side of the socket is centered towards the ball stud. Tighten the jam nuts to secure the sockets in position (Fig. 11).

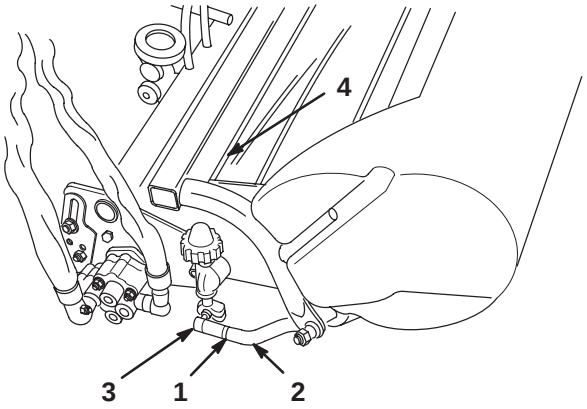

Figure 11

1. Jam nut
2. Pull arm
3. Ball joint—adjust for clearance
4. 1/4–1/2 in. (6.4–12.7 mm) clearance

For Cutting Unit Models 04470, 04471, 04472, and 04473

Note: When sharpening, setting the height-of-cut or performing other maintenance procedures on the cutting units, store the cutting unit reel motors in the support tubes on the front of the frame to prevent damage to the hoses.

1. Remove the cutting units from the cartons. Assemble and adjust them per the cutting unit Operator's Manual. Use the gauge bar from the loose parts kit to adjust the height of cut.

2. Mount a washer and ball stud to each end of the front roller on the cutting units (Fig. 12).

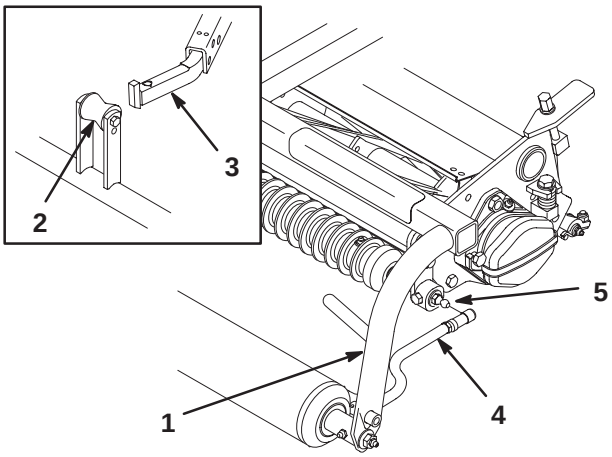

Figure 12

1. Pull frame
2. Lift roller
3. Lift arm
4. Pull arm
5. Ball stud

3. Slide the cutting unit under the pull frame while hooking the lift roller onto the lift arm (Fig. 12).

4. Slide the sleeve back on the ball joint and rotate the pull arm down so the socket fits over the ball stud. Release the sleeve so it slides over the stud and locks the assemblies together (Fig. 12).

5. Mount the baskets on the pull frames, loosen the jam nuts on the pull arms, and adjust the ball sockets until there is 1/4 to 1/2 in. (6.4 to 12.7 mm) clearance between the lip of the basket and the reel blades.

   Note: This prevents the basket from tipping the cutting unit forward, causing the lift roller to come off of the lift arm while in the mowing operation.

   Be sure the basket lips are equidistant from the reel blades all across each reel. If the basket is too close to the reel, it is possible for the reel to contact the basket when the cutting unit is raised off of the ground.

6. Align the sockets in the ball joints so the open side of the socket is centered towards the ball stud. Tighten the jam nuts to secure the sockets in position (Fig. 13).

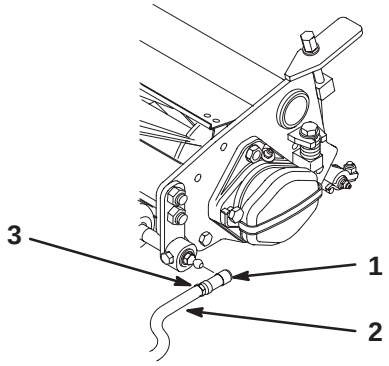

Figure 13

1. Ball joint
2. Pull arm
3. Jam nut

7. Assemble the mounting capscrews for the reel drive motor to each cutting unit. Leave approximately 1/2 in. (13 mm) of threads exposed on each mounting capscrew (Fig. 14).

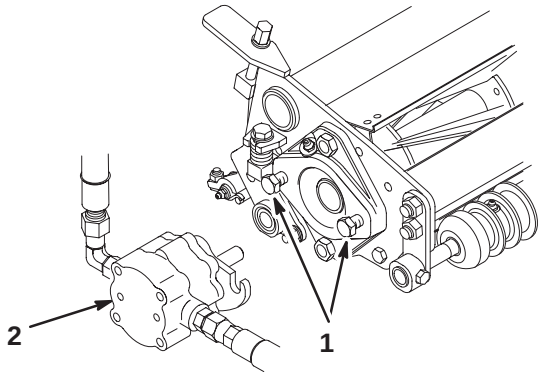

Figure 14

1. Capscrews
2. Drive motor

8. Remove the protective covers from the cutting units and the reel drive motor shafts.

Note: Retain the protective covers for the cutting units. Install them whenever the reel drive motors are removed to protect the cutting unit bearings from contamination.

9. Using a hand pump grease gun, fill the cavity at the end of the cutting unit with #2 general purpose grease.

10. Coat the spline shaft of the motor with clean grease and install the motor by rotating the motor clockwise so that the motor flanges clear the studs. Rotate the motor counterclockwise until the flanges are encircling the studs. Tighten the mounting capscrews (Fig. 14).

Rear Ballast

This unit complies with CEN standard EN 836:1997, ISO standard 5395:1990, and ANSI B71.4–1999 specifications when 40 lb. of calcium chloride ballast is added to the rear wheel.

Important If a puncture occurs in a tire with calcium chloride, remove the unit from the turf area as quickly as possible. To prevent possible damage to the turf, immediately soak the affected area with water.

Before Operating

Note: Determine the left and right sides of the machine from the normal operating position.

Checking the Engine Oil

The engine is shipped with 1-3/4 quarts (1.7 liters) (w/filter) of oil in the crankcase; however, the oil level must be checked before and after the engine is first started.

The engine uses any high-quality detergent oil having the American Petroleum Institute (API) service classification of SC, SD, SE, SF, or SG. The recommended viscosity (weight) is SAE 30.

1. Position the machine on a level surface.
2. Unscrew the dipstick and wipe it with a clean rag. Screw the dipstick into the tube and make sure it is seated fully (Fig. 15). Unscrew the dipstick out of the tube and check the oil level. If the oil level is low, remove the filler cap from the valve cover and add enough oil to raise the level to the Full mark on the dipstick.

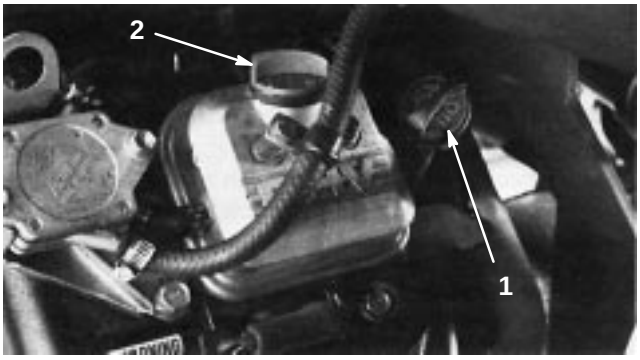

Figure 15

1. Dipstick
2. Filler cap

3. Pour oil into the opening in the valve cover until the oil level is up to the Full mark on the dipstick. Add the oil slowly and check the level often during this process. **Do not overfill.**

Important Check the oil level every 8 operating hours or daily. Initially, change the oil after the first 8 hours or operation; thereafter, under normal conditions, change the oil every 50 hours and the filter every 100 hours. However, change the oil more frequently when the engine is operated in extremely dusty or dirty conditions.

4. Install the filler cap and dipstick firmly in place.

Filling the Gas Tank

Use **unleaded** regular gasoline suitable for automotive use (85 pump octane minimum). Leaded regular gasoline may be used if unleaded regular is not available.

Important Never use methanol, gasoline containing methanol, or gasohol containing more than 10% ethanol because the fuel system could be damaged. Do not mix oil with gasoline.

Danger

In certain conditions, gasoline is extremely flammable and highly explosive. A fire or explosion from gasoline can burn you and others and can damage property.

- **Fill the fuel tank outdoors, in an open area, when the engine is cold. Wipe up any gasoline that spills.**
- **Do not fill the fuel tank completely full. Add gasoline to the fuel tank until the level is 1 in. (25 mm) below the bottom of the filler neck. This empty space in the tank allows gasoline to expand.**
- **Never smoke when handling gasoline, and stay away from an open flame or where gasoline fumes may be ignited by a spark.**
- **Store gasoline in an approved container and keep it out of the reach of children. Never buy more than a 30-day supply of gasoline.**
- **Always place gasoline containers on the ground away from your vehicle before filling.**
- **Do not fill gasoline containers inside a vehicle or on a truck or trailer bed because interior carpets or plastic truck bed liners may insulate the container and slow the loss of any static charge.**
- **When practical, remove gas-powered equipment from the truck or trailer and refuel the equipment with its wheels on the ground.**
- **If this is not possible, then refuel such equipment on a truck or trailer from a portable container, rather than from a gasoline dispenser nozzle.**
- **If a gasoline dispenser nozzle must be used, keep the nozzle in contact with the rim of the fuel tank or container opening at all times until fueling is complete.**

1. Clean around the fuel tank cap and remove the cap (Fig. 16). Add unleaded regular gasoline to the fuel tank until the level is 1 in. (25 mm) below the bottom of the filler neck. This space in the tank allows gasoline to expand. Do not fill the fuel tank completely full.

Note: Fuel tank capacity is 7.5 gallons (28.4 liters).

2. Install the fuel tank cap securely. Wipe up any gasoline that may have spilled.

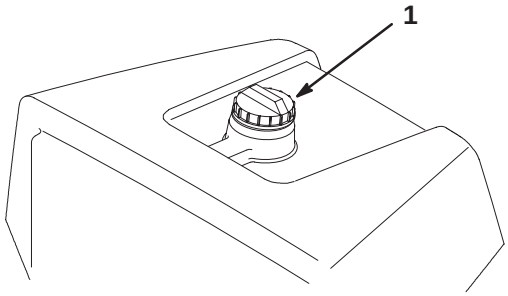

Figure 16

1. Fuel tank cap

Servicing the Hydraulic System

The hydraulic system is designed to operate on anti-wear hydraulic fluid. The hydraulic reservoir is filled at the factory with approximately 8-1/2 gallons (32.2 liters) of ISO VG 46/48 hydraulic fluid. The appropriate hydraulic oils are listed below.

Important Use only the types of hydraulic fluids specified. Other fluids could cause system damage.

Note: A red dye additive for the hydraulic system oil is available in 2/3 oz. bottles. One bottle is sufficient for 4–6 gallons of hydraulic oil. Order Part No. 44-2500 from your Authorized Toro Distributor. We do not recommend the use of red dye additive for biodegradable fluid. Use food coloring instead.

Group 1 Hydraulic Fluid (Moderate climate—average duty)

Note: The fluids within this group are interchangeable.

ISO VG 46/68 multi-viscosity anti-wear hydraulic fluid

Mobil	DTE 15M
Amoco	Rykon Premium ISO 46
Castrol	AWH 46
Chevron	Rykon Premium Oil ISO 46
Conoco	Hydroclear AW MV46
Exxon	Univis N46
Gulf	Harmony HVI 46 AW
Kendall	Hyken Golden MV SAE 5W-20
Pennzoil	AWX MV46
Phillips	Magnus A KV 5W-20
Shell	Tellus T 46
Sunoco	Sun Hyd. Oil 2105
Texaco	Rando HDZ 46

Universal Tractor Hydraulic Fluid

Mobil	Mobilfluid 424
Amoco	1000 Fluid
Chevron	Tractor Hydraulic Fluid
Conoco	Hydroclear Powertran
Esso	Hydraul
Gulf	Universal Tractor Fluid
Kendall	Hyken 052
Marathon	Marafluid Super HT
Pennzoil	Hydra-Trans
Phillips	HG Fluid
Shell	Donax TD
76 Lubricants	Hydraulic/Tractor Fluid
Sunoco	TH Fluid
Texaco	TDH

Group 2 Hydraulic Fluid (Hot Climate—Heavy Duty)

Note: The fluids within this group are interchangeable.

ISO VG 68 anti-wear hydraulic fluid

Mobil	DTE 15M or DTE 26
Amoco	Rykon AW No. 68
Castrol	AWS 68
Chevron	Hydraulic Oil AW ISO 68
Conoco	Hydroclear AW 68
Exxon	Nuto H 68
Gulf	Harmony 68 AW
Kendall	Four Seasons AW 68
Marathon	ISO 68
Pennzoil	AW Hydraulic Oil 68
Phillips	Magnus A ISO 68
Shell	Tellus 68
76 Lubricants	AW 68
Sunoco	SunVis 868
Texaco	Rando HD 68

Important Group 1 fluids are recommended for use at typical ambient temperatures of 32°F (0°C) to 105°F (41°C). The ISO Type 46/48 fluid has been found to offer optimal performance in a wide range of temperature conditions for the average user. The Universal Tractor

Fluids offer similar performance for those who prefer them, with perhaps some slight loss of efficiency at high ambient temperatures compared to the Type 46/48 fluids.

Group 2 fluids are recommended for heavy-duty use in hot climates where ambient temperatures range from about 65°F (18°C) to 120°F (49°C). Use at lower ambient temperatures may result in hard starting, increased engine laboring while cold, sluggish or non-operating spool valves while cold and high filter back-pressure due to the higher viscosity of these fluids.

Note: When changing from one type of hydraulic fluid to another, be certain to remove all the old fluid from the system, as some fluids are incompatible with others.

Group 3 Hydraulic Fluid (Biodegradable)

ISO VG 32/46 anti-wear hydraulic fluid

Mobil	EAL 224H

Note: This biodegradable hydraulic fluid is not compatible with the fluids in group 1 or 2.

Note: This oil is available in 5 gallon (19 l) containers from your Authorized Toro Distributor. Order Part No. 100-7674.

Note: When changing from standard fluid to the biodegradable type, be certain to follow approved flushing procedures as published by Mobil. Contact your local Toro Distributor for details.

Checking the Hydraulic System

Check the level of hydraulic fluid before the engine is first started and daily thereafter.

1. Position the machine on a level surface. Make sure the machine has cooled down so the oil is cold.
2. Remove the cap from the top of the reservoir and check the fluid level. The fluid should be approximately 3-1/2 in. (89 mm) below the top of the fill hole (Fig. 17).
3. If the oil level is low, slowly fill the reservoir with ISO VG 46/48 or equivalent hydraulic oil until the level is up to the correct level. Do not mix oils.
4. Install the cap.

Important To prevent system contamination, clean the top of the hydraulic oil containers before puncturing them. Ensure that the pour spout and funnel are clean.

Note: Make a close visual inspection of the hydraulic components. Inspect them for Ieaks, loose fasteners, missing parts, improperly routed lines, etc. Make any corrections necessary.

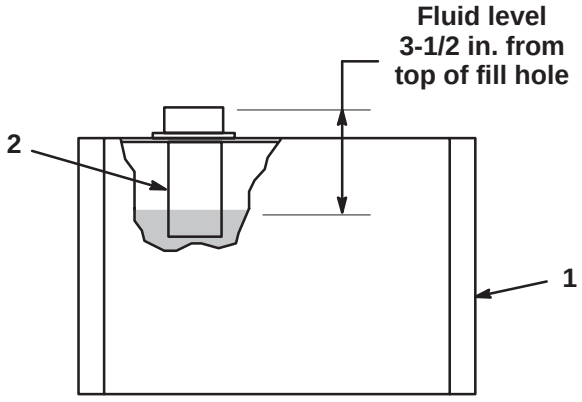

Figure 17

1. Hydraulic reservoir
2. Screen

Tire Pressure

The tires are over-inflated at the factory for shipping purposes. Reduce the pressure to the proper levels before starting the unit.

Vary the tire pressure for the front wheels, depending upon your turf conditions, from a minimum of 8 psi to a maximum of 12 psi (55 to 83 kPa).

Vary the tire pressure for the rear wheel from a minimum of 8 psi to a maximum of 15 psi (55 to 103 kPa).

Checking the Torque of the Wheel Nuts

Warning

Failure to maintain proper torque of the wheel nuts could result in personal injury.

Torque the wheel nuts to 70–90 ft.-lb. (95–122 N·m) after 1–4 hours of operation and again after 10 hours of operation. Torque every 200 hours thereafter.

Operation

Note: Determine the left and right sides of the machine from the normal operating position.

Think Safety First

Please carefully read all of the safety instructions and symbols in the safety section. Knowing this information could help you or bystanders avoid injury.

The use of protective equipment, such as but not limited to, for eyes, ears, feet, and head is recommended.

Caution

This machine produces sound levels in excess of 85 dBA at the operators ear and can cause hearing loss through extended periods of exposure.

Wear hearing protection when operating this machine.



Figure 18

1. Caution
2. Wear hearing protection

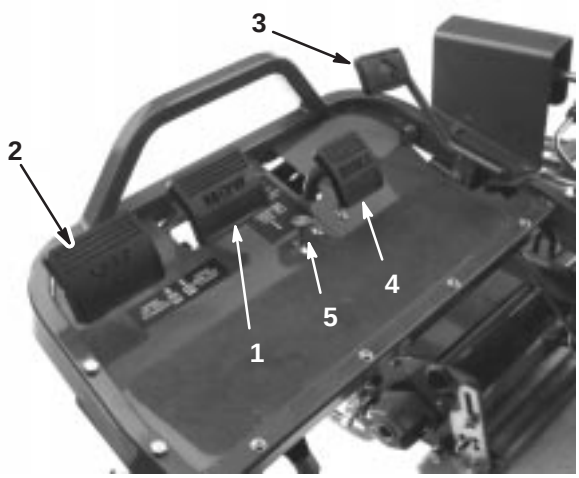

Figure 19

1. Mow pedal
2. Lift pedal
3. Traction pedal
4. Brake pedal
5. Parking brake button

Controls

Mow Pedal

Depressing the mow pedal (Fig. 19) **fully** during operation lowers the cutting units and starts the reels. The mow pedal will stay depressed due to detent action of the valve bank during operation. The operator does not need to hold the pedal down.

Brake Pedal

The brake pedal (Fig. 19) actuates an automotive drum-type mechanical brake located at each traction wheel.

Lift Pedal

Depressing the lift pedal (Fig. 19) during operation stops the reels from turning and lifts the cutting units. The lift pedal must be **fully** depressed until the cutting units are fully raised and have stopped rotating.

Parking Brake Button

Depressing the brake pedal to actuate the brake assembly, then depressing the small button indicated (Fig. 19) will keep the brakes actuated for parking. Disengage it by depressing the brake pedal. Form the habit of locking the parking brake before you leave the machine.

Traction and Stopping Pedal

The traction pedal (Fig. 19) has three functions: to make the machine move forward, to move it backward, and to stop machine. Depress the top of the pedal to move forward and the bottom of the pedal to move backward or to assist in stopping when moving forward. Also, allow the pedal to move to the neutral position to stop the machine. For operator comfort, do not rest the heel of your foot on reverse when operating forward (Fig. 20).



Figure 20

Throttle Control

The throttle control (Fig. 21) gives the operator the ability to control the speed of the engine. Moving the throttle control toward the Fast position increases the engine RPM; moving the throttle control toward Slow will decrease the engine RPM.

Note: The engine cannot be stopped by the use of the throttle control.

Choke

To start a cold engine, close the carburetor choke by moving the choke control (Fig. 21) forward to the Closed position. After the engine starts, regulate the choke to keep the engine running smoothly. As soon as possible, open the choke by pulling it rearward to the Open position. A warm engine requires little or no choking.

Ignition Switch

Insert the key into the switch (Fig. 21) and turn it clockwise as far as possible to the Start position to start the engine. Release the key as soon as the engine starts; the key will move to the On position. Turn the key counterclockwise to the Off position to stop the engine.

Voltmeter

The voltmeter (Fig. 21) indicates the electrical system voltage.

Fuse

The fuse (Fig. 21) is part of the electrical circuit. It contains a 10 amp. fuse (15 amp. maximum).

Hour Meter

The hour meter (Fig. 21) indicates the total hours of machine operation. It starts to function whenever the key switch is rotated to On.

Seat Adjusting Handle

This lever on the left side of the seat (Fig. 21) allows a 4 in. fore and aft adjustment.

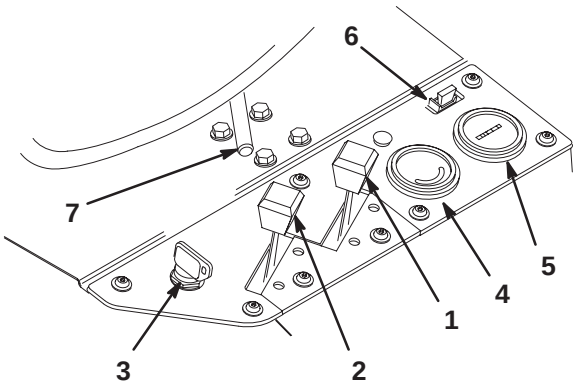

Figure 21

1. Choke control
2. Throttle control
3. Ignition switch
4. Voltmeter
5. Hour meter
6. Fuse (10 amp.)
7. Seat adjusting handle

Mow Lockout Lever

The lockout lever locks the mow pedal preventing accidental starting of the cutting units. To unlock it, pull the mow lockout pin outward (Fig. 22), rotate it clockwise, and insert the end into the rear hole in the bracket.

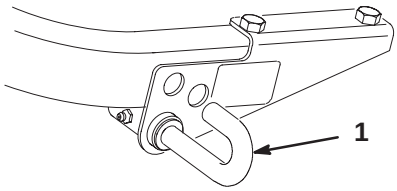

Figure 22

1. Mow lockout lever pin

Shift Selector

The shift selector is located on the top of the right hand panel (Fig. 23). It provides two traction selections plus a Neutral position. It is permissible to shift from one selection to another while the machine is in motion. No damage will result.

Neutral—used for starting the engine

No. 1 Position—used for greens mowing operation

No. 2 Position—used for transport operation

Important If the machine is operated in reverse with the cutting units down, the cutting units will be pulled off of the lift arms.

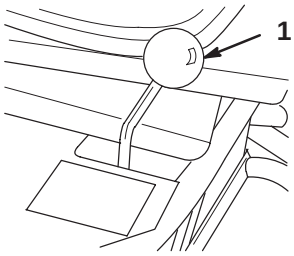

Figure 23

1. Shift selector

Break-in Period

Refer to the Engine Manual supplied with the machine for oil change and maintenance procedures recommended during the break-in period.

Only 8 hours of mowing operation is required for the break-in period.

Since the first hours of operation are critical to future dependability of the machine, monitor its functions and performance closely so that minor difficulties, which could

lead to major problems, are noted and can be corrected. Inspect the machine frequently during break-in for signs of oil leakage, loose fasteners, or any other malfunction.

To ensure optimum performance of the brake system, burnish (break-in) the brakes before using the machine. To burnish the brakes, firmly apply the brakes and drive the machine at mowing speed until the brakes are hot, as indicated by their smell. An adjustment to the brakes may be required after break-in; refer to Adjusting the Brakes, page 31.

Starting the Engine

Note: Inspect the areas beneath the mowers to be certain they are clear of debris.

1. Unlock the mow lockout lever by pulling the pin outward, rotating it clockwise, and inserting the end into the rear hole in the bracket.
2. Sit on the seat, place the shift selector in Neutral, and check the mow and lift pedals to be sure they are level with one another.
3. Remove your foot from the traction pedal and make sure the pedal is in the Neutral position.
4. Move the choke lever to the On position (only when starting a cold engine) and the throttle lever to the half throttle position.
5. Insert and rotate the ignition key clockwise until the engine starts. After the engine starts, regulate the choke to keep the engine running smoothly. As soon as possible, open the choke by pulling it rearward to the Off position. A warm engine requires little or no choking.
6. Check the machine out with the following procedures after the engine has started:

   A. Move the throttle control to the Fast position and momentarily engage the reels by depressing the mow pedal. The cutting units should drop and all the reels should turn.

   B. Operate the lift pedal. The cutting reels should stop and the cutting units should raise to the full transport position.

   Important Stop the engine. Check the lip of each basket to be sure it is not in contact with the reel during operation. Adjust the pull arms if contact is noted; refer to Installing the Cutting Units.

   C. Depress the brake pedal to keep the machine from moving, and operate the traction pedal through the forward and reverse positions.

   D. Continue the above procedure for 1–2 minutes. Neutralize the traction lever and mow and lift pedals, lock the parking brake, and turn the engine off.

   E. Check for oil leaks. If oil leaks appear, check the tightness of the hydraulic fittings. If oil leaks continue to appear, contact your local Toro Distributor for assistance and, if necessary, replacement parts.

Important The motor or wheel seals may show some trace of oil for a short period of time until the machine break-in period has transpired.

Note: Since the machine is new and the bearings and reels are tight, it is necessary to use the Fast throttle control position for this check. A fast throttle setting may not be required after the break-in period.

Checking the Interlock System

Caution

If safety interlock switches are disconnected or damaged the machine could operate unexpectedly causing personal injury.

- **Do not tamper with the interlock switches.**
- **Check the operation of the interlock switches daily and replace any damaged switches before operating the machine.**
- **Replace switches every two years regardless of whether they are operating properly or not.**

The purpose of the interlock system (Fig. 24) is to prevent the engine from cranking or starting unless the traction shift selector is in Neutral and the cutting units are disengaged. In addition, the engine will stop when:

- The cutting units are engaged with the operator off of the seat.
- The traction shift selector is in the No. 1 or No. 2 position with the operator off of the seat.

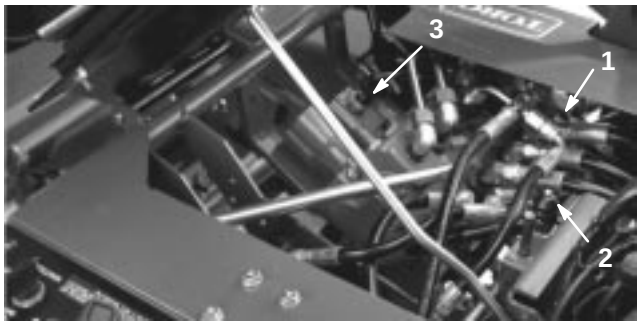

Figure 24

1. Traction switch
2. Seat switch
3. Mow/lift switch

Perform the following system checks daily to be sure the interlock system is operating correctly:

1. Sit on the seat, engage the parking brake, and move the shift selector to neutral. Remove your foot from the traction pedal and make sure the pedal is in neutral. Fully depress the lift pedal and release it. Try to start the engine. The engine should crank and run, which means the interlock system is operating correctly. If the engine did crank, proceed to step 2. If the engine did not crank, contact your local Toro Distributor for assistance.

2. Sit on the seat and engage the parking brake. Depress the lift pedal fully and release it. Move the traction shift selector to the #1 and #2 positions while trying to start the engine in each position. The engine should not crank, which means the traction switch on the valve bank is operating correctly. If the engine did not crank, proceed to step 3. If the engine cranked, contact your local Toro Distributor for assistance.

3. Sit on the seat and engage the parking brake. Fully depress the lift pedal and release it. Move the traction shift selector to neutral and try to start the engine. The engine should start and continue to run, which means the traction switch and mow/lift switch on the valve bank are operating correctly; proceed to step 4. If the engine cranked but did not start, the problem is not in the interlock system. If engine did not crank, contact your local Toro Distributor for assistance.

4. Sit on the seat, engage the parking brake, and move the traction shift selector to neutral. Depress the mow pedal and try to start the engine. The engine should not crank, which means the mow/lift switch is operating correctly. If the engine did not crank, proceed to step 6. If the engine cranked, contact your local Toro Distributor for assistance.

5. Sit on the seat and move the traction shift selector to neutral. Fully depress the lift pedal and release it. Start the engine and depress the mow pedal. Carefully rise from the seat; the engine should stop. If the engine stops, the interlock system is operating correctly. If the engine does not stop, stop the engine and find the problem before operating the machine again. If assistance is required, contact your local Toro Distributor.

6. Sit on the seat and move the traction shift selector to Neutral. Fully depress the lift pedal and release it. Start the engine and drive to an open area that is free of debris and foreign objects. Keep all people, especially children, away from the front of the machine and out of the area of operation. Move the shift selector to Neutral, make sure the mow pedal is disengaged, set the throttle control at half speed, and depress the brake pedal (do not engage the parking brake button). While holding the steering wheel, brace your feet on the foot deck and brake pedal and move the shift selector to the #1 position. Carefully rise from the seat; the engine should stop. If the engine stops, the interlock system is operating correctly.

7. Repeat step 6 with the shift selector in the #2 position. If the engine does not stop, stop the engine and find the problem before operating the machine again. If assistance is required, contact your local Toro Distributor.

Note: The machine is equipped with an interlock switch on the parking brake. The engine will stop if the traction shift selector is in the #1 and #2 positions with the parking brake engaged.

Preparing the Machine for Mowing

To assist in aligning the machine for successive cutting passes, it is suggested the following be done to the No. 2 and No. 3 cutting unit baskets:

1. Measure in approximately 5 in. (12.7 cm) from the outer edge of each basket.

2. Either place a strip of white tape or paint a line onto each basket paralleling the outer edge of each basket (Fig. 25).

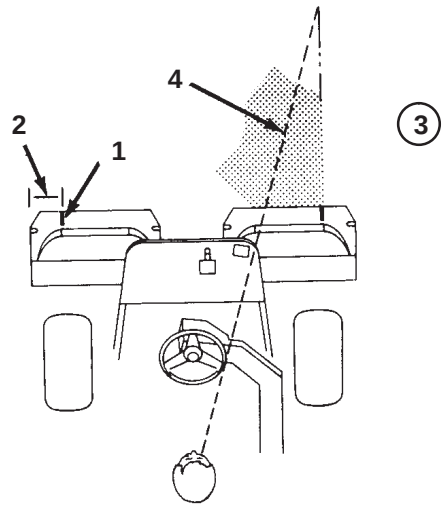

Figure 25

1. Alignment strip
2. Approximately 5 in. (12.7 cm)
3. Cut grass on right
4. Keep focal spot 6–10 ft. (1.8–3 m) ahead of the machine.

Training Period

Before mowing greens with the machine, it is recommended that you find a clear area and practice starting and stopping, raising and lowering the cutting units, turning, etc. This training period will be beneficial to the operator in gaining confidence in the performance of the machine.

Important If you shift to the No. 2 position while cutting greens, no increase in speed will result. However, a sudden increase in speed will develop when you actuate the lift pedal. For safety purposes, it is recommended that you use only the No. 1 position for cutting greens and the No. 2 position for transport.

Before Mowing

Inspect the green for debris, remove the flag from the cup, and determine the best direction to mow. Base the direction to mow on the previous mowing direction. Always mow in an alternate pattern from the previous mowing so that the grass blades will be less apt to lay down and therefore be difficult to trap between the reel blades and bedknife.

Mowing Procedures

1. Approach the green with the shift selector in the No. 1 position. Start on one edge of the green so that the ribbon procedure of cutting may be used. This holds compaction to a minimum and leaves a neat, attractive pattern on the greens.

Important Shift to the No. 1 position when approaching a green because the machine speed will automatically be reduced when the cutting units are engaged. Higher speed will resume when the cutting units are disengaged.

2. Actuate the mow pedal as the front edge of the grass baskets cross the outer edge of the green. This procedure drops the cutting units to the turf and starts the reels.

Note: The No. 1 (rear) cutting unit reel will not start until all the cutting units are on the ground and the No. 2 and No. 3 cutting units are cutting.

Important Familiarize yourself with the fact that the No. 1 cutting unit reel is delayed and therefore, you should practice to try to gain the required timing necessary to minimize the cleanup mowing operation.

3. Overlap a minimal amount with the previous cut on return passes. To assist in maintaining a straight line across the green and keep the machine an equal distance from the edge of the previous cut, establish an imaginary sight line approximately 6 to 10 ft. (1.8 to 3 m) ahead of the machine to the edge of the uncut portion of the green (Fig. 25 and 26). Some find it useful to include the outer edge of the steering wheel as part of the sight line; i.e. keep the steering wheel edge aligned with a point that is always kept the same distance away from the front of the machine (Fig. 25 and 26).

4. As the front of the baskets cross the edge of the green, depress the lift pedal. This will stop the reels and lift the cutting units. Timing of this procedure is important, so the mowers do not cut into the fringe area. However, as much of the green as possible should be cut to minimize the amount of grass left to mow around the outer periphery.

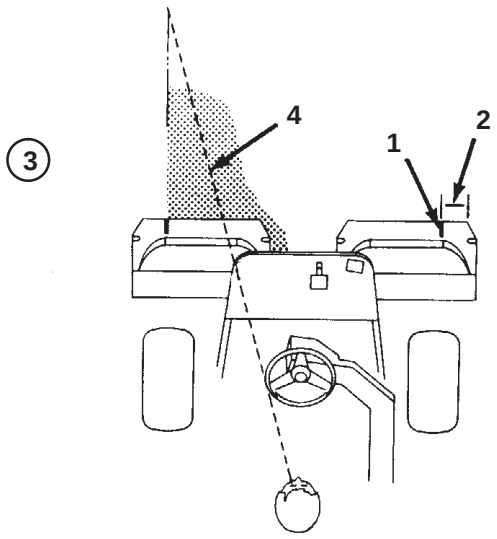

Figure 26

1. Alignment strip
2. Approximately 5 in. (12.7 cm)
3. Cut grass on left
4. Keep focal spot 6–10 ft. (1.8–3 m) ahead of the machine.

5. Cut down on operating time and ease lineup for the next pass by momentarily turning the machine in the opposite direction, then turning in the direction of the uncut portion; i.e., if intending to turn right, first swing slightly left, then right. This will assist in getting the machine more quickly aligned for the next pass. Follow the same procedure for turning in the opposite direction. It is a good practice to try to make as short of a turn as possible. However, turn in a wider arc during warmer weather to minimize the possibility of bruising the turf.

Important The machine should never be stopped on a green with the cutting unit reels operating as damage to the turf may result. Stopping on a wet green with the machine may leave marks or indentations from the wheels.

6. Finish cutting the green by mowing the outer periphery. Be sure to change the direction of cutting from the previous mowing. Always keep weather and turf conditions in mind and be sure to change the direction of mowing from the previous cutting. Replace the flag.

7. Raise the cutting units and empty the grass baskets of all clippings before transporting to the next green. Heavy wet clippings place an undue strain on the baskets and will add unnecessary weight to the machine, thereby increasing the load on the engine, hydraulic system, brakes, etc.

Transport Operation

Make sure that the cutting units are in the full up position. Set the shift selector in No. 2 if conditions will permit faster ground speed. Shift to No. 1 and operate at slower ground speeds in rough or hilly areas. Use the brakes to slow the machine while going down steep hills to avoid loss of control. Always approach rough areas at a reduced speed (shift selector in No. 1), and cross severe undulations carefully. Familiarize yourself with the width of the machine. Do not attempt to pass between objects that are close together so that costly damage and down time can be prevented.

Inspection and Cleanup After Mowing

At the completion of the mowing operation, thoroughly wash the machine with a garden hose without a nozzle so excessive water pressure will not cause contamination and damage to the seals and bearings. After cleaning, it is recommended the machine be inspected for possible hydraulic fluid leaks, damage or wear to hydraulic and mechanical components, and the cutting units checked for sharpness. Also, lubricate the mow and lift pedal and brake shaft assembly with SAE 30 oil or spray lubricant to deter corrosion and help keep the machine performing satisfactorily during the next mowing operation.

Maintenance

Note: Determine the left and right sides of the machine from the normal operating position.

Recommended Maintenance Schedule

Maintenance Service Interval	Maintenance Procedure
After First 8 Hours	• Change the engine oil. • Replace the engine oil filter.
Every 50 Hours	• Check the battery fluid level. • Check the battery cable connections. • Service the air filter pre-cleaner. • Lubricate all grease fittings[1]. • Change the engine oil.
Every 100 Hours	• Replace the engine oil filter. • Replace the air filter element.
Every 200 Hours	• Check the reel bearing preload adjustment. • Torque the wheel lug nuts.
Every 800 Hours	• Replace the spark plugs. • Replace the fuel filter. • Check the engine RPM (idle and full throttle). • Check the valve clearance.
Every 2000 Hours or 2 Years (whichever occurs first)	• Replace moving hoses. • Replace the safety switches. • Drain/flush the fuel tank. • Drain/flush the hydraulic tank. • Replace the hydraulic oil and filter.

Important Refer to your engine operator's manual for additional maintenance procedures.

Daily Maintenance Checklist

Duplicate this page for routine use.

Maintenance Check Item	For the week of: Mon.	Tues.	Wed.	Thurs.	Fri.	Sat.	Sun.
Check the safety interlock operation.							
Check the instrument operation.							
Check the brake operation.							
Check the fuel level.							
Check the engine oil level.							
Clean the engine air cooling fins.							
Inspect the air filter pre-cleaner.							
Check any unusual engine noises.							
Check the hydraulic hoses for damage.							
Check for fluid leaks.							
Check the tire pressure.							
Check the reel-to-bedknife adjustment.							
Check the height-of-cut adjustment.							
Lubricate all grease fittings.[1]							
Lubricate the mow, lift, and brake linkage.							
Touch up damaged paint.							

[1]immediately after **every** washing, regardless of the interval listed

Notation for Areas of Concern

Inspection performed by:		
Item	**Date**	**Information**
1		
2		
3		
4		
5		
6		
7		
8		
9		
10		
11		
12		
13		

Caution

If you leave the key in the ignition switch, someone could accidently start the engine and seriously injure you or other bystanders.

Remove the key from the ignition and disconnect the wire from the spark plug before you do any maintenance. Set the wire aside so that it does not accidentally contact the spark plug.

Lubrication

The traction unit has grease fittings that must be lubricated regularly with No. 2 General Purpose Lithium-Base Grease. If the machine is operated under normal conditions, lubricate all bearings and bushings after every 50 hours of operation.

The following traction unit bearings and bushings must be lubricated:

- Rear wheel bearings (1) (Fig. 27)
- Steering fork shaft (1) (Fig. 28)
- Lift arm pivot (3) and pivot hinge (3) (Fig. 29)
- Pull frame shaft and roller (12) (Fig. 30)
- Mow lift pivot (Fig. 31)
- Lift cylinders (3) (Fig. 32)
- Mow lockout lever (Fig. 33)



Figure 27

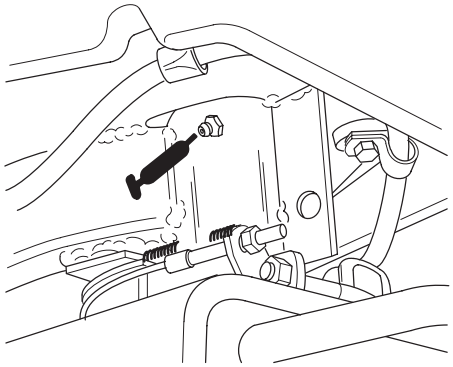

Figure 28

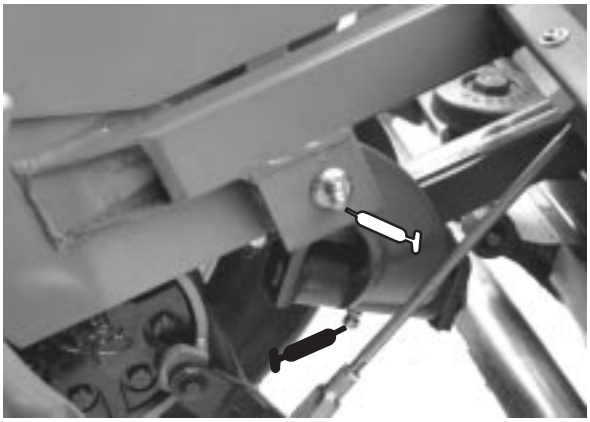

Figure 29



Figure 30



Figure 31

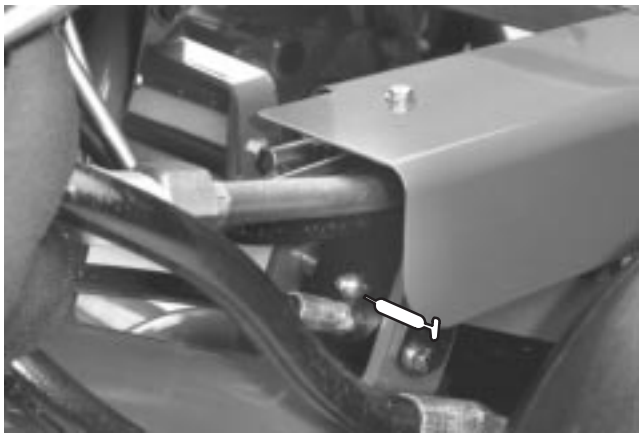

Figure 32

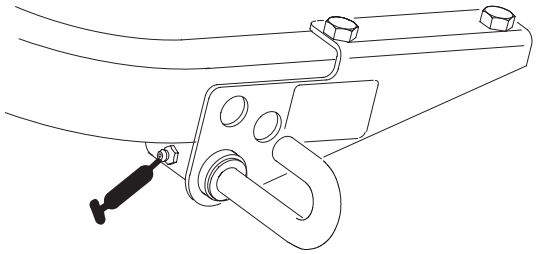

Figure 33

Changing the Engine Oil and Filter

Change the oil and filter after the first 8 hours of operation. Thereafter, change the oil every 50 hours and the filter every 100 hours.

1. Remove the drain plug (Fig. 34) and let oil flow into a drain pan. When the oil stops, install the drain plug.

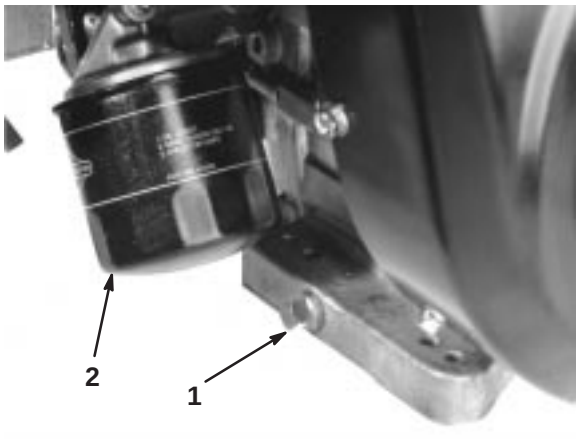

Figure 34

1. Drain plug
2. Oil filter

2. Remove the oil filter (Fig. 34). Apply a light coat of clean oil to the new filter gasket.
3. Screw the filter on by hand until the gasket contacts the filter adapter, then tighten 1/2 to 3/4 turn further. **Do not overtighten.**
4. Add oil to the crankcase; refer to Checking the Engine Oil, page 16.
5. Dispose of the used oil properly.

Servicing the Air Cleaner

Service the air cleaner foam pre-cleaner after every 50 operating hours and the air cleaner cartridge after every 100 operating hours. More frequent cleaning is required when operating in dusty or dirty conditions.

1. Release the locking clips and remove the air cleaner cover (Fig. 35). Clean the cover thoroughly.

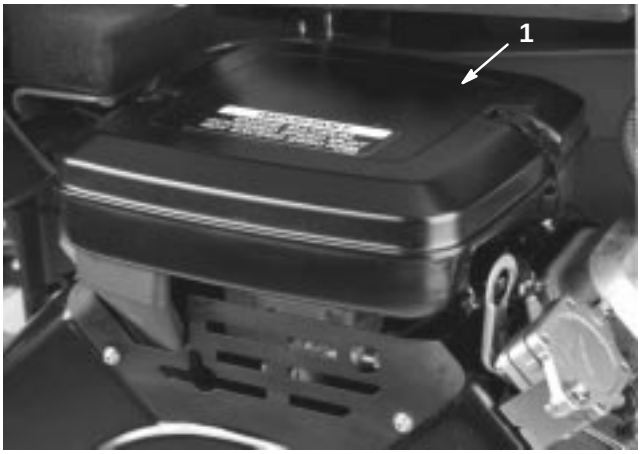

Figure 35

1. Air cleaner cover

2. Remove the wing nut securing the elements to the air cleaner body.
3. If the foam element is dirty, remove it from the paper element (Fig. 36). Clean it thoroughly.
   A. Wash the foam element in a solution of liquid soap and warm water. Squeeze it to remove dirt, but do not twist it because the foam may tear.
   B. Dry it by wrapping it in a clean rag. Squeeze the rag and foam element dry.



Figure 36

1. Foam element
2. Paper element

4. When servicing the foam element, check the condition of the paper element. Clean it by gently tapping it on a flat surface or replace it if needed.
5. Reinstall the foam element, paper element, and air cleaner cover.

Important Do not operate the engine without the air cleaner element because extreme engine wear and damage will likely result.

Adjusting the Throttle Control

Proper throttle operation is dependent upon proper adjustment of the throttle control. Before adjusting the carburetor, ensure that the throttle control is operating properly.

1. Loosen the cable clamp screw securing the cable to the engine (Fig. 37).

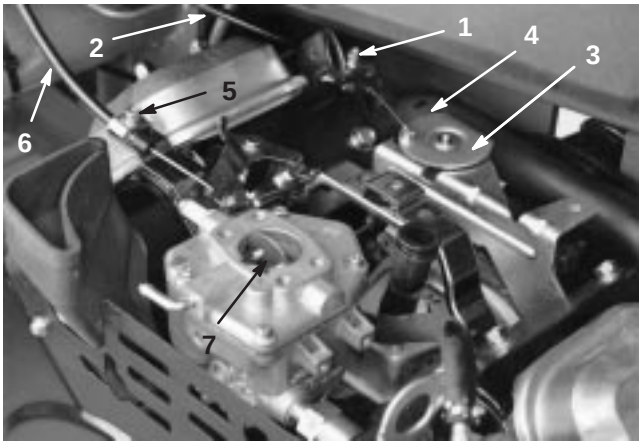

Figure 37

1. Throttle casing clamp screw
2. Throttle cable
3. Swivel
4. Stop
5. Choke casing clamp screw
6. Choke cable
7. Choke butterfly

2. Move the remote throttle control lever forward to the Fast position.
3. Pull firmly on the throttle cable until the back of the swivel contacts the stop (Fig. 37).
4. Tighten the cable clamp screw and check the engine RPM setting.

   High Idle: 2850 ± 50 RPM

   Low Idle: 1650 ± 100 RPM

Adjusting the Choke Control

1. Loosen the cable clamp screw securing the cable to the engine (Fig. 37).
2. Move the remote choke control lever forward to the Closed position.
3. Pull firmly on the choke cable until the choke butterfly is completely closed, then tighten the cable clamp screw (Fig. 37).

Adjusting the Carburetor and Speed Control

Important Before the carburetor and speed control are adjusted, the throttle and choke controls must be adjusted properly.

Warning

The engine must be running during adjustment of the carburetor and speed control. Contact with moving parts or hot surfaces may cause personal injury.

- **Shift into neutral and engage the parking brake before performing this procedure.**
- **Keep hands, feet, clothing, and other body parts away from the cutting blades, rotating parts, the muffler, and other hot surfaces.**

1. Start the engine and let it run at half throttle for approximately five minutes to warm up.
2. Move the throttle control to the Slow setting. Adjust the idle stop screw counterclockwise until it no longer contacts the throttle lever.
3. Bend the governed idle spring anchor tang (Fig. 38) to attain an idle speed of 1450±50 RPM. Check the speed with a tachometer.

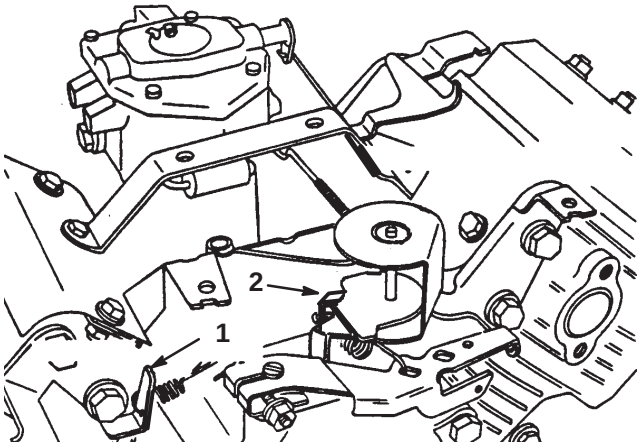

Figure 38

Shown with Air Cleaner Removed

1. Governed idle spring anchor tang
2. High speed spring anchor tang

4. Adjust the idle stop screw clockwise until the idle speed is 1650±100 RPM.
5. Move the throttle control to the Fast position. Bend the high speed spring anchor tang (Fig. 38) to attain a high speed of 2850±50 RPM.

Replacing the Spark Plugs

Replace the spark plugs after every 800 operating hours.

The recommended air gap is 0.030 in. (.76 mm)

The correct spark plug to use is a Champion RC 12YC.

Note: The spark plug usually lasts a long time; however, the plug should be removed and checked whenever the engine malfunctions.

1. Clean the area around the spark plugs so that foreign matter cannot fall into the cylinder when the spark plug is removed.
2. Pull the spark plug wires off of the spark plugs and remove the plugs from the cylinder head.
3. Check the condition of the side electrode, center electrode, and center electrode insulator to ensure that there is no damage.

Important A cracked, fouled, dirty, or otherwise malfunctioning spark plug must be replaced. Do not sand blast, scrape, or clean electrodes by using a wire brush because grit may eventually release from the plug and fall into the cylinder. The result is usually a damaged engine.

4. Set the air gap between the center and side of the electrodes at 0.030 in. (.76 mm) (Fig. 39) Install the correctly gapped spark plug w/gasket seal, and tighten the plug to 200 in.-lb. (23 N·m). If a torque wrench is not used, tighten the plug firmly.

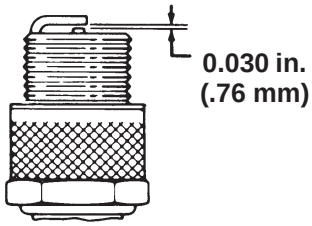

Figure 39

Replacing the Fuel Filter

An in-line filter is incorporated into the fuel line between the fuel tank and carburetor (Fig. 40). Replace the filter every 800 hours or sooner if the fuel flow is restricted. Be sure the arrow on the filter is pointing away from the fuel tank.

Danger

In certain conditions, gasoline is extremely flammable and highly explosive. A fire or explosion from gasoline can burn you and others and can damage property.

- **Drain gasoline from the fuel tank when the engine is cold. Do this outdoors in an open area. Wipe up any gasoline that spills.**
- **Never smoke when draining gasoline, and stay away from an open flame or where a spark may ignite the gasoline fumes.**

1. Close the fuel shut-off valve, loosen the hose clamp (Fig. 40) on the carburetor side of filter and remove the fuel line from the filter.

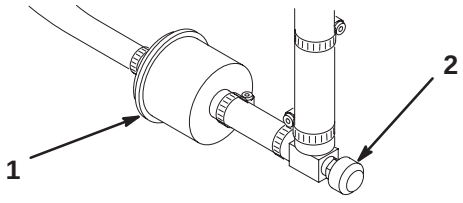

Figure 40

1. Fuel filter
2. Shut-off valve

2. Place a drain pan under the filter, loosen the remaining hose clamp, and remove the filter (Fig. 40).
3. Install the new filter with the arrow on the filter body pointing away from the fuel tank.

Changing the Hydraulic Oil and Filter

Normally, change the hydraulic oil and filter after every 2000 operating hours. If the oil becomes contaminated, contact your local Toro distributor because the system must be flushed. Contaminated oil looks milky or black when compared to clean oil.

1. Remove the drain plug from the reservoir (Fig. 41) and let hydraulic oil flow into a drain pan. Reinstall and tighten the plug when hydraulic oil stops draining.

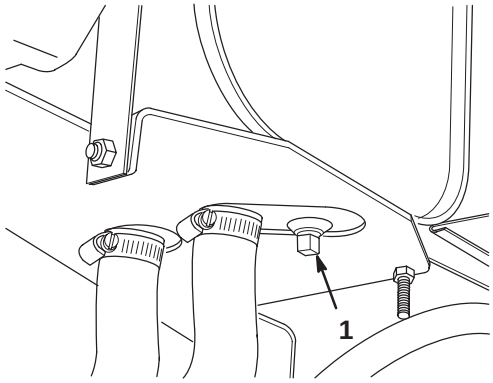

Figure 41

1. Hydraulic reservoir drain plug

2. Clean the area around the filter mounting area (Fig. 42). Place a drain pan under the filter and remove the filter.

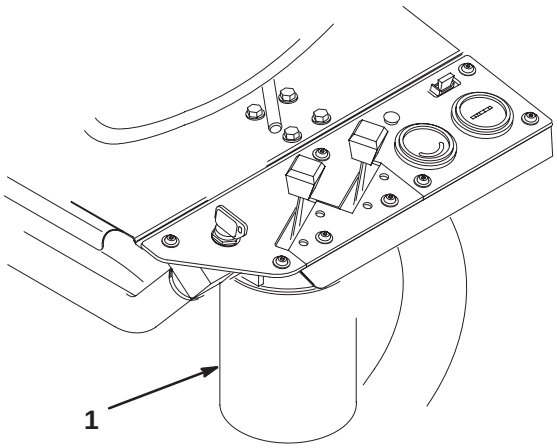

Figure 42

1. Hydraulic filter

3. Fill the replacement filter with Mobil DTE 15M hydraulic fluid. Lubricate the sealing gasket, and hand turn the filter until the gasket contacts the filter head. Tighten the filter 3/4 turn further. The filter should now be sealed.

4. Fill the hydraulic tank with approximately 4.5 gallons of hydraulic oil; refer to Checking the Hydraulic System, page 17.

5. Start the machine and run it at idle for 3 to 5 minutes to circulate the fluid and remove any air trapped in the system. Stop the machine and recheck the fluid level.

6. Dispose of the used oil properly.

Checking the Hydraulic Lines and Hoses

Warning

Hydraulic fluid escaping under pressure can penetrate skin and cause injury.

- **Make sure all hydraulic fluid hoses and lines are in good condition and all hydraulic connections and fittings are tight before applying pressure to the hydraulic system.**
- **Keep your body and hands away from pin hole leaks or nozzles that eject high pressure hydraulic fluid.**
- **Use cardboard or paper to find hydraulic leaks.**
- **Safely relieve all pressure in the hydraulic system before performing any work on the hydraulic system.**
- **Seek immediate medical attention if fluid is injected into skin.**

Check the hydraulic lines and hoses daily for leaks, kinked lines, loose mounting supports, wear, loose fittings, weather deterioration, and chemical deterioration. Make all necessary repairs before operating.

Adjusting the Brakes

A brake adjustment rod is located on each side of the machine so that the brakes can be equally adjusted. Adjust the brakes as follows:

1. Transport the machine and depress the brake pedal; both wheels should lock equally.

Caution

Testing the brakes in a confined area where others are present could cause injury.

Always check the brakes in a wide, open-spaced, flat area which is free of other persons and obstructions before and after adjustment.

2. If the brakes do not lock equally, disconnect the brake rods by removing the cotter pin and clevis pin (Fig. 43).

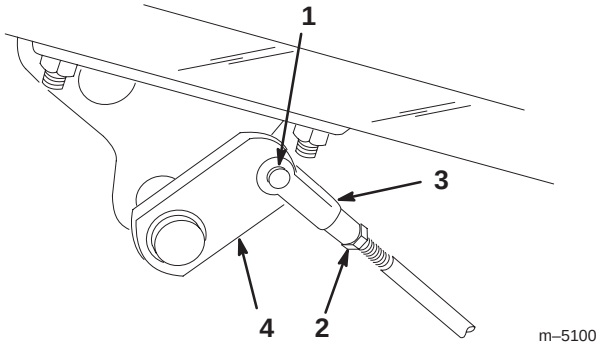

Figure 43

1. Clevis pin and cotter pin
2. Jam nut
3. Clevis
4. Brake shaft

3. Loosen the jam nut and adjust the clevis accordingly (Fig. 43).

4. Assemble the clevis to the brake shaft (Fig. 43).

5. Check the amount of free travel of the brake pedal when the adjustment is completed. There should be 1/2 to 1 in. (13 to 26 mm) travel before the brake shoes make contact with the brake drums. Readjust, if necessary, to achieve this setting.

6. Transport the machine and depress the brake pedal; both brakes should lock equally. Readjust, if necessary.

7. It is recommended that the brakes be burnished annually; refer to Break-In Period, page 20.

Adjusting the Rear Camshaft

A camshaft misaligned with the valve bank may cause the following:

- No increase in ground speed in the No. 2 (transport) traction selection
- The mow pedal will not stay depressed (in detent) without foot pressure.
- Slow lift of the cutting units
- Slow or no drive to the cutting units

If one or more malfunctions occur, loosen the rear camshaft mounting capscrews (Fig. 44) and relocate the cam shaft until the condition is corrected. Retighten the capscrews.

Important Readjust the mow/lift switch and the lift and mow pedal height when the camshaft adjustment is completed.

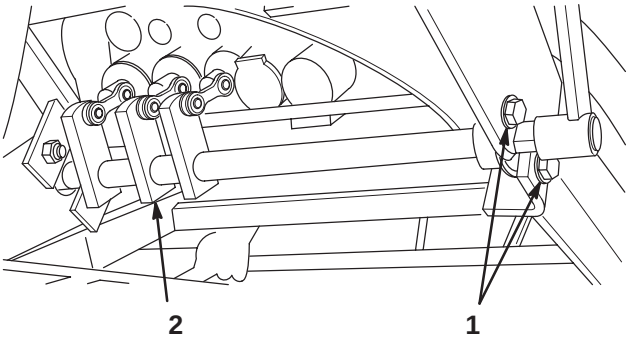

Figure 44

1. Mounting capscrews
2. Cam blocks

Adjusting the Lift and Mow Pedal Height

To gain proper spool travel in the valve bank, adjust the lift and mow pedals to equal heights as follows:

1. Place 1, 2, and 3 spools in neutral (center of travel) and remove the transfer rod guard from the foot panel (Fig. 45).

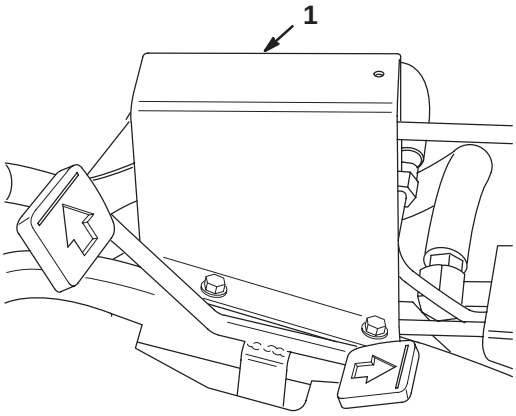

Figure 45

1. Transfer rod guard

2. Loosen the jam nut securing the yoke on the front of the long control rod. Remove the cotter pin and clevis pin.

3. Move the adjustment lever by hand to level the mow and lift pedals and adjust the yoke on the control rod until the hole in the yoke lines up with the adjustment lever hole (Fig. 46).

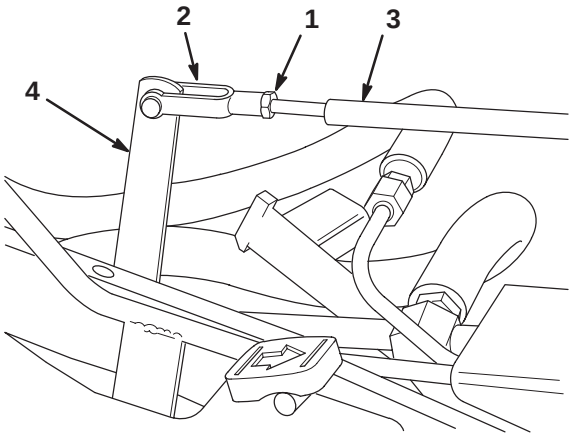

Figure 46

1. Jam nut
2. Yoke
3. Control rod
4. Adjustment lever

Leveling the Lift and Mow Pedals

If the lift and mow pedals are not level when they are in the neutral position, an adjustment to the lift pivot is required.

1. Loosen the nut on the back side of the lift pivot (Fig. 47).



Figure 47

1. Lift pivot
2. Eccentric screw

2. Rotate the eccentric screw (Fig. 47) to raise or lower the lift pivot spring, leveling the lift pivot and pedals.

3. While holding the screw, tighten the nut locking the adjustment.

Adjusting the Traction Pedal

To check the forward and reverse operation of the traction pedal, proceed as follows:

Adjusting Forward

1. Press the traction pedal fully forward until the No. 5 section valve spool is completely pulled out. The pedal should contact the pedal stop (Fig. 48).

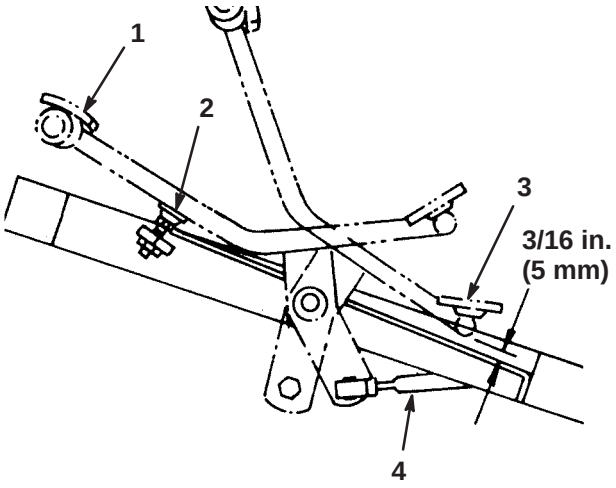

Figure 48

1. Fully forward
2. Pedal stop
3. Reverse
4. Control rod

If the pedal contacts the stop before the spool is completely out, or if the pedal does not make contact with the stop, an adjustment to the stop is necessary. Proceed as follows:

2. Loosen the hex nut securing the threaded rod to the frame. Turn the flange nut on the rod to raise or lower the stop (rod) while checking the pedal. Retighten the nut.

Adjusting Reverse

1. Press down on the rear of the traction pedal (reverse) until the No. 5 section spool valve is completely pushed in.

2. Check the distance between the bottom of the pedal and footrest as shown in Fig. 48. The distance shouId be approximately 3/16 in. (5 mm). If the distance is greater or less than 3/16 in. (5 mm), an adjustment to the traction control rod is required. Proceed as follows:

A. Remove the jam nut and ball joint securing the control rod (Fig. 48) to the traction shaft pivot.

B. Loosen the jam nuts securing the ball joints to the control rod and adjust the ball joints and control rod to attain the 3/16 in. (5 mm) dimension when reinstalled.

Adjusting Cutting Unit Lift and Drop

The cutting unit lift/drop circuit is equipped with a flow control valve. This valve is preset at the factory at approximately 3-1/2 turns open, but an adjustment may be required to compensate for differences in hydraulic oil temperatures, mowing speeds, etc. If an adjustment is required, proceed as follows:

Note: Allow the hydraulic oil to reach full operating temperature before adjusting the flow control valve.

1. Raise the seat and locate the flow control valve mounted to the main control valve (Fig. 49).

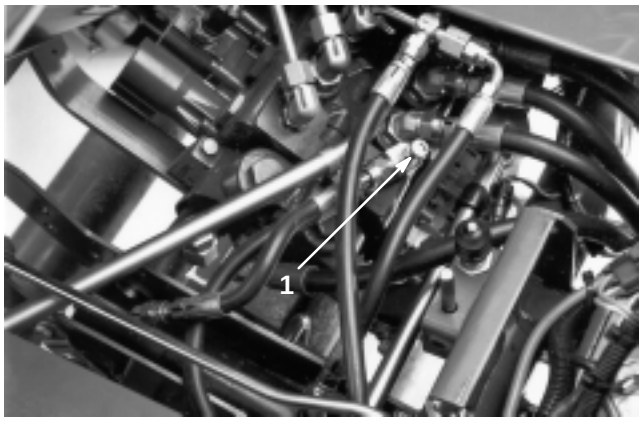

Figure 49

1. Flow control valve

2. Loosen the jam nut retaining the adjusting knob on the flow control. When loosening the jam nut, **hold the flow control knob** to prevent it from rotating.

3. Rotate the knob 1/4 turn counterclockwise if the center cutting unit is dropping too late or 1/4 turn clockwise if the center cutting unit is dropping too early.

4. After the desired setting has been achieved, hold the knob to prevent any rotation and tighten the jam nut.

Adjusting the Lift Cylinders

To regulate the height of the front cutting units when in the raised (transport) position, the front lift cylinders may be adjusted.

1. Lower the cutting units to the ground.

2. Loosen the jam nut, on the clevis, of the cutting unit lift cylinder that needs to be adjusted.

3. Disconnect the cylinder clevis from the lift arm.

4. Rotate the clevis until the desired height is attained.

5. Connect the cylinder clevis to the lift arm and tighten the jam nut.

Replacing the Seat Switch

1. Pivot the seat forward and secure it with the support rod.
2. Remove the boot from the button end of the seat switch (Fig. 50) and retain it for installation on the replacement switch. Unplug the switch connectors.

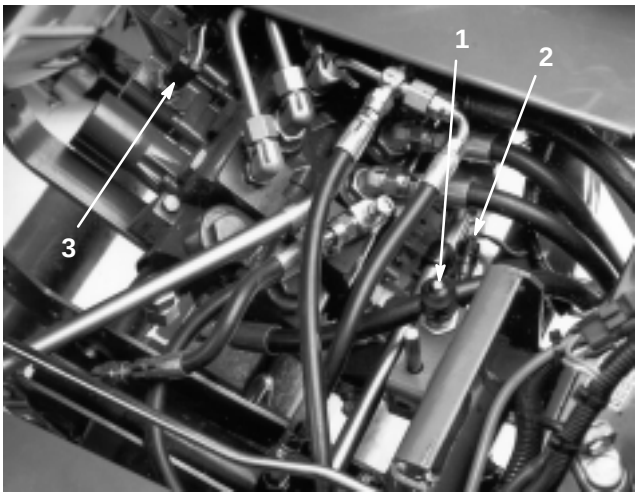

Figure 50

1. Traction switch
2. Seat switch
3. Mow/lift switch

3. Loosen the jam nut and unscrew the switch from the mounting bracket.
4. Screw the new switch through the mounting bracket until the switch button is about 1/16 in. (1.6 mm) shorter than the top of the seat return spring pin. Install the boot into the mount grooves.
5. Carefully release the seat to its normally down position, but do not sit or apply force on the seat. There should be a slight gap between the switch and the seat plate.
6. Lock the switch in place by tightening the jam nut to 75 in.-lb. (8 N·m) against the mounting bracket.

Important The switch threads will be damaged if the jam nut is overtightened.

7. Connect a continuity tester or ohm meter to the switch terminals. With the seat in the down position and no one on the seat, the switch circuit should **not** have continuity. If there is continuity, repeat steps 4–6. If there is no continuity, proceed to step 8.
8. Sit on the seat. The seat switch **should** have continuity. If there is no continuity, repeat steps 4–7. If there is continuity, proceed to step 9.
9. Plug the switch connectors together.

Replacing the Traction Switch

1. Pivot the seat forward and secure it with the support rod..
2. Unplug the switch connectors from the traction switch installed in the valve bank bonnet on the selector valve section (Fig. 50).
3. Loosen the jam nut and unscrew the switch from the mounting bracket.
4. Move the shift selector to Neutral.
5. Partially screw the new switch into the bonnet.
6. Connect a continuity tester or ohm meter to the switch terminals and continue to turn the switch in until there is continuity. Then rotate the switch in 1/2 turn (180 degrees).
7. Tighten the jam nut to 75 in.-lb. (8 N·m) against the bonnet.

Important The switch threads will be damaged **if** the jam nut is overtightened.

8. Connect a continuity tester or ohm meter to the switch terminals and move the shift selector to the #1 and #2 positions. There should **not** be continuity when the shift selector is in either of these positions. If there is continuity, repeat steps 5 and 6.
9. Move the shift selector lever to Neutral and connect a continuity tester or ohm meter to the switch terminals. The switch **should** show continuity. This means the switch is operating correctly.
10. Plug the switch connectors together.

Replacing the Mow/Lift Switch

Important The spool travel for the 1, 2, and 3 spools must be correct before the mow/lift switch can be adjusted; refer to Adjusting the Rear Camshaft, page 31.

1. Pivot the seat forward and secure it with the support rod.
2. Unplug the switch connectors from the end of the mow/lift switch installed in the valve bank bonnet (Fig. 50).
3. Loosen the jam nut and unscrew the switch from the valve bank bonnet.
4. While holding the lift pedal in the fully depressed position (the valve bank spools are fully in) partially screw the new switch into the bonnet.

5. Connect a continuity tester or ohm meter across the switch terminals and turn the switch in until continuity occurs. Then rotate the switch in 1/2 turn (180 degrees) and secure the jam nut to 75 in.-lb. (8 N·m) against the bonnet.

Important The switch threads will be damaged if the jam nut is overtightened.

6. Connect a continuity tester or ohm meter to the switch terminals and depress the mow pedal. There should **not** be continuity. If there is continuity, repeat step 4. Proceed to step 7 if there is no continuity.

7. Depress the lift pedal and release it (neutral position). The switch circuit **should** have continuity.

8. Plug the switch connectors together.

Adjusting the Traction Return Linkage

If the shift selector lever does not return to Neutral or the #1 position from the #2 position when the mow pedal is engaged, an adjustment to the traction return linkage is required.

1. Loosen the front jam nut securing the cable assembly to the mow/lift control rod bracket (Fig. 51).

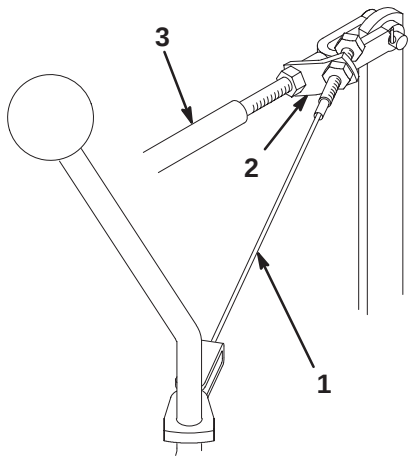

Figure 51

1. Cable assembly
2. Mow/lift control rod bracket
3. Mow/lift control rod

2. Move the shift lever to the #1 position.

3. While holding the mow/lift control rod in the rear position, tighten the rear locknut to remove almost all of the slack from the cable assembly (Fig. 51). Do not over-tension the cable.

4. Tighten the front jam nut to lock the adjustment.

5. Check the operation and readjust as required.

Servicing the Steering Assembly

The steering cable tension should be adjusted whenever play is felt in the steering wheel. A loose steering cable will make it difficult to steer in a straight line. However, overtightening the cable will cause undue wear to the pulleys and cause the cable to stretch and fail prematurely. When properly tensioned, the cable should deflect 1/2 in. (13 mm) at mid span when 11 lb. of force is applied.

1. Tension the cable by securing the cable end hex with an open end wrench and turning the nut on the cable end with another wrench (Fig. 52).

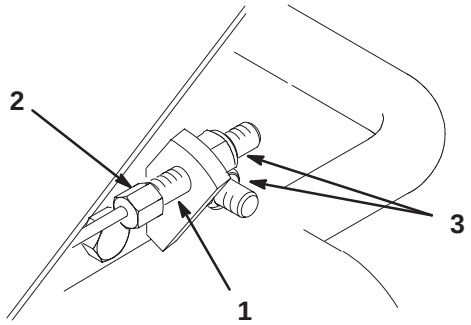

Figure 52

1. Steering cable
2. Hold with wrench
3. Turn to remove slack

2. If all threads on the cable end have been used, replace the cables. If necessary, service the pulley and steering cable under the steering wheel by removing the cover on the end of the steering column (Fig. 53).

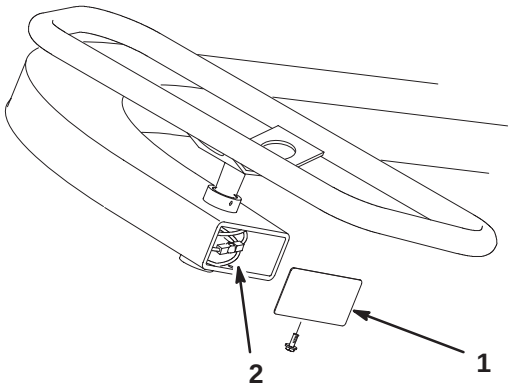

Figure 53

1. Cover
2. Pulley and steering cable

Battery Care

Warning

Battery posts, terminals, and related accessories contain lead and lead compounds, chemicals known to the State of California to cause cancer and reproductive harm. *Wash hands after handling.*

The battery electrolyte level must be properly maintained and the top of the battery kept clean. Store the machine in a cool place to prevent the battery from running down.

Check the electrolyte level every 50 operating hours or, if machine is in storage, every 30 days.

Danger

Battery electrolyte contains sulfuric acid which is a deadly poison and causes severe burns.

- **Do not drink electrolyte and avoid contact with skin, eyes or clothing. Wear safety glasses to shield your eyes and rubber gloves to protect your hands.**
- **Fill the battery where clean water is always available for flushing the skin.**

Maintain the cell level with distilled or demineralized water. Do not fill the cells above the bottom of the split ring inside each cell.

Keep the top of the battery clean by washing it periodically with a brush dipped in ammonia or bicarbonate of soda solution. Flush the top surface with water after cleaning it. Do not remove the fill caps while cleaning the battery.

The battery cables must be tight on the terminals to provide good electrical contact.

Warning

Incorrect battery cable routing could damage the tractor and cables causing sparks. Sparks can cause the battery gasses to explode, resulting in personal injury.

- **Always *disconnect* the negative (black) battery cable before disconnecting the positive (red) cable.**
- **Always *connect* the positive (red) battery cable before connecting the negative (black) cable.**

If corrosion occurs at the terminals, disconnect the cables, negative (–) cable first, and scrape the clamps and terminals separately. Reconnect the cables, positive (+) cable first, and coat the terminals with petroleum jelly.

Storage

If you wish to store the machine for a long period of time, the following steps should be performed prior to storage:

1. Remove accumulations of dirt and old grass clippings. Sharpen the reels and bedknives, if necessary; refer to the Cutting Unit Operator's Manual. Use a rust preventive on bedknives and reel blades. Grease and oil all lubrication points; refer to Lubrication, page 26.
2. Block up the wheels to remove any weight on the tires.
3. Drain and replace the hydraulic fluid and filter and inspect the hydraulic lines and fittings. Replace, if necessary; refer to Changing the Hydraulic Oil and Filter, page 30 and Checking the Hydraulic Lines and Hoses, page 31.
4. All fuel should be removed from the fuel tank. Run the engine until it stops from lack of fuel. The small amount of fuel that remains in the bottom of the tank should be removed by absorbing it with a clean dry cloth. Replace the fuel filter; refer to Replacing the Fuel Filter, page 30.
5. While the engine is still warm, drain the oil from the crankcase. Refill it with fresh oil; refer to Changing the Engine Oil and Filter, page 27.
6. Remove the spark plugs, pour one ounce of SAE 30 oil into the cylinders, and crank slowly to distribute the oil. Replace the spark plugs; refer to Replacing the Spark Plugs, page 29.
7. Clean dirt and chaff from the cylinder, cylinder head fins, and blower housing.
8. Remove the battery and charge it fully. Either store it on the shelf or on the machine. Leave the cables disconnected if it is stored on the machine. Store the battery in a cool atmosphere to avoid quick deterioration of the charge in the battery.
9. If possible, store the machine in a warm, dry location.

Electrical Schematic

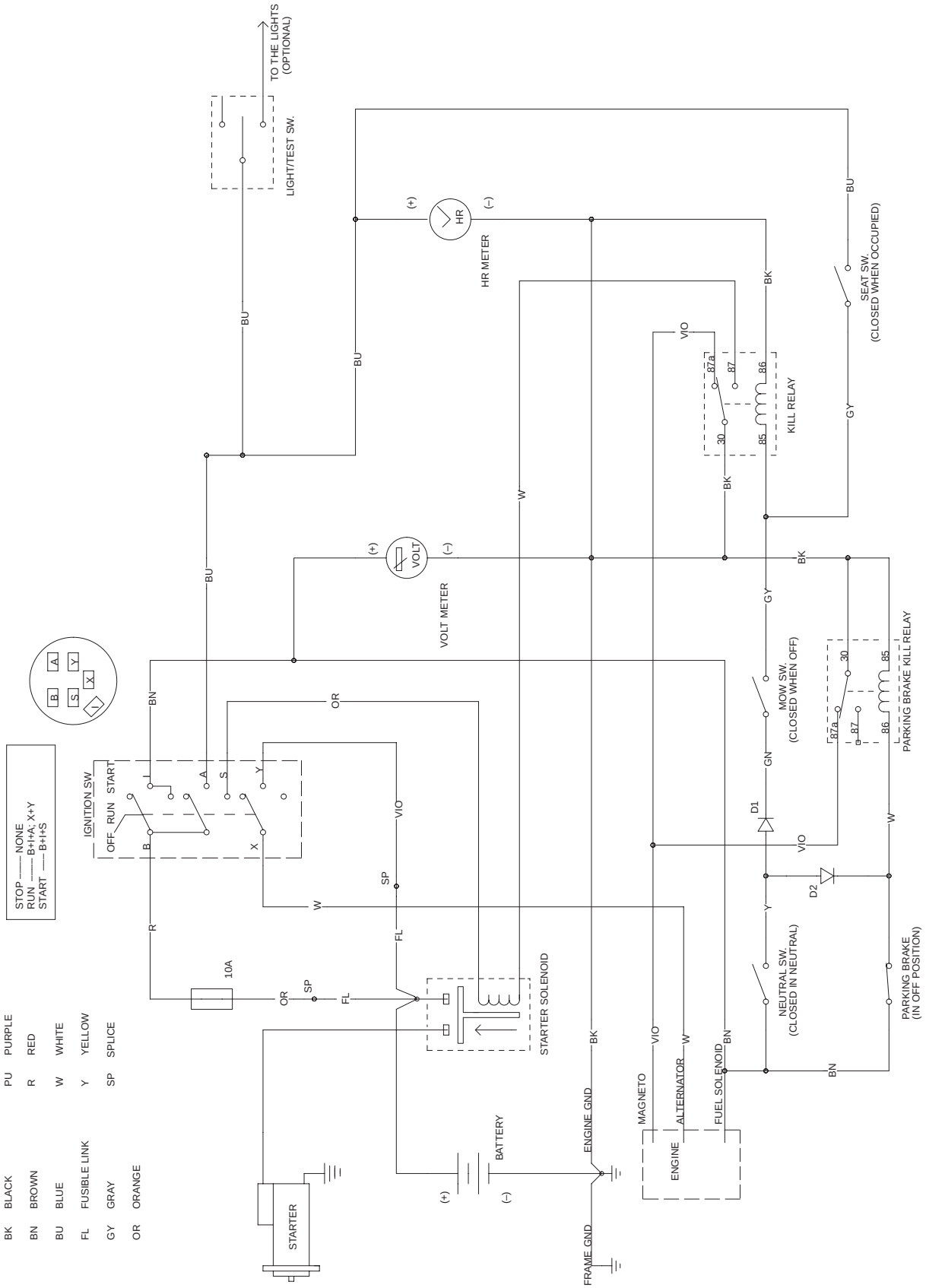

Hydraulic Schematic

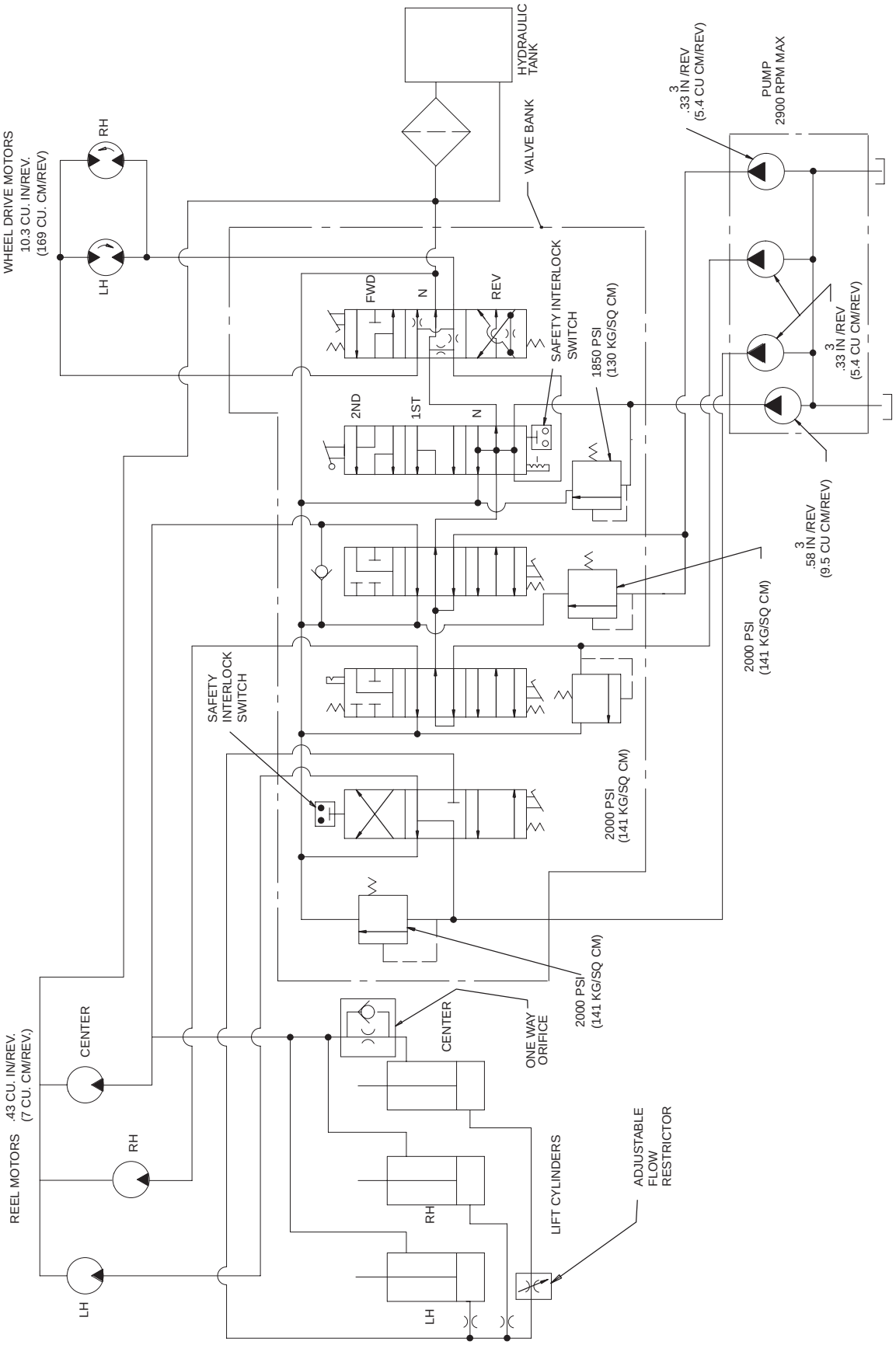

Troubleshooting

Problem	Possible Causes	Corrective Action
Engine: The engine loses power.	1. The fuel tank is empty. 2. A fuel line is clogged or there is debris in the fuel tank. 3. The fuel filter is clogged. 4. The oil level in the crankcase is low. 5. The oil in the crankcase is incorrect. 6. Carburetor fuel solenoid 7. The throttle cable is set incorrectly. 8. The choke is closed. 9. The air cleaner element is plugged. 10. The carburetor malfunctions. 11. The ignition malfunctions. 12. The cooling fins are plugged with debris or the engine is overheating. 13. The engine has an internal malfunction. 14. The pump coupling is loose. 15. The hydraulic system is malfunctioning.	1. Fill the fuel tank. 2. Clean the fuel tank. Use clean gasoline. 3. Replace the filter. 4. Add oil to the proper level. Check the level more frequently. 5. Replace it with the correct oil. 6. Check the solenoid and wiring. 7. Repair as necessary. 8. Readjust the choke. 9. Replace the element and service it more frequently. 10. Repair as necessary. 11. Repair as necessary. 12. Clean the fins. Repair the engine as necessary. 13. Repair as necessary. 14. Repair or replace the coupling. 15. Refer to hydraulic troubleshooting below.
The engine will not start.	1. The ignition system is faulty. 2. The fuel tank is empty. 3. The starter system is malfunctioning. 4. Carburetor fuel solenoid	1. Repair as necessary. 2. Fill the fuel tank. 3. Check the connections, solenoid, starter motor, and ignition switch. 4. Check the solenoid and wiring.
Hydraulic: There is no ground speed increase in the #2 selection.	1. The control lever is misadjusted. 2. The rear camshaft is misadjusted. 3. The mow/lift linkage is binding or there is a broken lift pivot spring. 4. There are wrong detent parts in the #4 spool. 5. The #2 or #3 spool relief valves are stuck open. (The reel drive RPM will also be low on the #1 or #3 cutting unit).	1. Adjust the control lever. 2. Adjust it by moving the right end or the rear camshaft forward or the left end rearward. 3. Lubricate or repair the machine. 4. Remove the valve bank and repair the #4 spool assembly. 5. Remove and repair or replace the relief cartridge.
In the hydraulic system there is no #1 or reverse traction speed. The #2 speed is normal.	1. The disc seal between the #3 and #4 valve sections is damaged or missing. 2. The poppet inside the #4 spool is stuck open or off its seat.	1. Remove the valve bank and replace the disc seal. 2. Remove the valve bank and repair the #4 spool section.

Problem	Possible Causes	Corrective Action
In the hydraulic system there is no #1 or reverse traction speed. The #2 speed is normal. (continued)	3. The traction relief cartridge in the #4 spool section is open. 4. A traction motor lacks efficiency. There is fluid leaking past the internal gears. 5. The hydraulic pump lacks efficiency. There is fluid leaking past the internal gears.	3. Remove the relief cartridge. Repair or replace it. 4. Test to identify the faulty motor. Repair or replace the motor. 5. Test to verify a diagnosis. Repair or replace the pump.
There is no traction or it is slow in all selections.	1. The brakes are dragging. 2. The o-ring seals around the traction relief cartridge or inlet sleeve in the #4 spool valve are faulty. Fluid is leaking by to the tank. 3. A traction motor(s) is worn or weak. 4. The pump is excessively worn. 5. The traction relief in the #4 spool valve is open.	1. Determine the cause and repair it. 2. Remove the relief and inlet sleeve. Replace the o-rings. 3. Test to verify. Repair or replace the motor(s). 4. Test to verify. Repair or replace the pump. 5. Remove, repair, or replace it.
There is no traction or it is slow in all selections and the reels are affected.	1. The oil level in the reservoir is low. 2. The shift lever bracket is loose. 3. The rear camshaft is misadjusted. 4. The engine lacks power.	1. Add oil to the proper level. 2. Adjust and tighten the shift lever. 3. Adjust the camshaft. 4. Repair as necessary.
The shift lever is binding.	1. The #4 spool detent assembly is lacking lubrication.	1. Remove the valve bank. Disassemble the detent assembly and repair it.
All three cutting units raise and lower too slowly.	1. The lift cylinder and linkages are binding due to lack of lubrication.	1. Lubricate more frequently.
The center (#1) cutting unit is dropping too late or too early.	1. The flow control valve is misadjusted.	1. Adjust the valve.
The front cutting units are too high or too low when they are in the raised (transport) position.	1. The front lift cylinders are misadjusted.	1. Adjust the cylinders.
The cutting units lift too slowly.	1. The rear camshaft is misadjusted. 2. The #1 spool travel is restricted by the mow/lift switch. 3. The lift check poppet in the #1 spool section is stuck partially closed.	1. Adjust the camshaft. 2. Adjust the switch. 3. Remove the lift check and repair or replace it.
The center cutting unit (#1) reel operates in the raised position.	1. The rear camshaft is misadjusted. The #3 spool is too far out of the body. 2. The brazed tube assembly on the #3 spool section is restricted. 3. The valve return port between the #3 spool section and the right-hand cover is restricted.	1. Adjusted the camshaft. 2. Remove the restriction. 3. Disassembly the cover and remove the restriction.

Problem	Possible Causes	Corrective Action
The cutting units drop during transport (between greens).	1. A lift cylinder is leaking internally.	1. Raise the units and block them up. Remove the lines from the brazed tube and remove the blocks. The line that leaks fluid is attached to the bad cylinder. Repair the cylinder.
	2. The lift check plug seals in the #1 spool body are damaged.	2. Remove the lift check plugs. Replace the o-ring assemblies.
	3. A detent stud is loose in the #2 spool.	3. Remove the adjustment cap from the #2 spool bonnet. Tighten the stud with a screwdriver.
	4. The #1 spool is loose in the valve body and fluid is bypassing.	4. Replace the spool valve assembly.
The cutting units drop while the machine is stored (overnight).	1. This is a normal condition.	1. No repair is necessary.
One or more cutting units are slow or there is no reel driven action.	1. The bedknife to reel adjustment is too tight.	1. Adjust per the cutting unit operator's manual
	2. The reel bearings are tight.	2. Repair as necessary.
	3. The rear camshaft is misadjusted.	3. Adjust the camshaft.
	4. The poppet in a relief cartridge is off seat.	4. Remove and repair or replace the relief cartridge.
	5. An improper suction line(s) is installed. The line collapsed.	5. Remove the suction line and replace with genuine Toro parts.
	6. A line fitting has a blockage.	6. Repair as necessary.
	7. A motor is excessively worn.	7. Test to verify. Repair or replace the motor.
	8. The #1 cutting unit has slow reel RPM.	8. Check the lift cylinders for internal leakage. Repair or replace the cylinder.
	9. The pump is excessively worn.	9. Text to verify. Repair or replace the pump.
	10. A spool is loose in the valve body. Fluid is leaking past the spool.	10. Replace the spool valve assembly.
	11. A steel pressure line is damaged and flow is restricted (front cutting units only).	11. Replace the line.
	12. The fluid level is low enough to affect the total machine performance.	12. Add fluid
The reel drive pressure lines pulsate during operation.	1. This is a normal condition. It will vary from line to line.	1. No repair is necessary.
The mow pedal will not stay down unless it is held down with your foot (the #2 spool is not in Detent).	1. The rear camshaft is misadjusted.	1. Adjust the camshaft.
	2. The #2 spool detent is malfunctioning.	2. Remove and repair it.
Electrical: The engine starts (but should not) when the shift selector is in gear.	1. The traction switch is adjusted incorrectly or is damaged.	1. Refer to Replacing the Traction Switch.
The engine starts (but should not) when the mow pedal is depressed and the reels are engaged.	1. The mow/lift switch is adjusted incorrectly or is damaged.	1. Refer to Replacing the Mow/Lift Switch.
The engine starts (but should not) when the operator is not on the seat.	1. The seat switch is adjusted incorrectly or is damaged.	1. Refer to Replacing the Seat Switch

Problem	Possible Causes	Corrective Action
The engine fails to crank, regardless of the shift selector or mow pedal position.	1. The mow/lift switch, traction switch, and/or seat switch are adjusted incorrectly or are damaged.	1. Refer to Replacing the Traction Switch, Replacing the Mow/Lift Switch, and/or Replacing the Seat Switch.
	2. The battery terminals are corroded.	2. Clean the terminals.
	3. The mow/lift or traction switch wires are loose.	3. Check the wires and connect them properly.
	4. The battery is dead.	4. Charge or replace the battery.
	5. A solenoid is damaged.	5. Replace the solenoid.
	6. The ignition switch is damaged.	6. Replace the ignition switch.
	7. The starter is damaged.	7. Replace or repair the starter.
	8. The engine is seized.	8. Repair the engine.
	9. The key switch, voltmeter, or solenoid wires are loose.	9. Connect the wires.
	10. The operator is not on the seat.	10. Sit on the seat.
The engine cranks but does not start when the shift selector and mow pedal are in neutral.	1. The cause of this problem is **unrelated** to the interlock wiring system.	1. All interlock switches are okay. Proceed to next cause.
	2. The rear camshaft is misadjusted.	2. Adjust the camshaft.
	3. The engine or rectifier plug is loose.	3. Connect the wire.
	4. The “I” terminal wire of key switch is loose.	4. Connect the wire.
	5. There is engine trouble or the fuel tank is empty.	5. Determine the problem and correct it.
	6. The parking brake kill relay is damaged.	6. Replace the relay.
The engine does not stop when the mow pedal is depressed (the reels are engaged) as you get off of the seat.	1. The mow/lift or seat switch is adjusted incorrectly or is damaged.	1. Refer to Replacing the Mow/Lift Switch or Replacing the Seat Switch.
	2. The seat return pin spring is broken, missing, or jammed down.	2. Replace, loosen, and lubricate the parts so that the pin operates freely.
	3. The seat pivot fails to rotate freely.	3. Loosen and lubricate the seat pivot pin to ensure free movement.
The engine does not stop when the shift selector is in gear as you get off of the seat.	1. The traction or seat switch is adjusted incorrectly or is damaged.	1. Refer to Replacing the Traction Switch or Replacing the Seat Switch.
	2. The seat return pin spring is broken, missing, or jammed down.	2. Replace, loosen, and lubricate the parts sp that the pin operates freely.
	3. The seat pivot fails to rotate freely.	3. Loosen and lubricate the seat pivot pin the ensure free movement.
The engine seems to “cut out” too much during transport. (Some cut out is normal.)	1. The seat if lifting off of the seat switch button too easily.	1. Adjust the seat switch or instruct the operator to sit back in the seat during transport.

Problem	Possible Causes	Corrective Action
The engine does not continue to run when sitting on the seat and the shift selector is placed in gear or the mow pedal is depressed.	1. The seat switch is adjusted incorrectly or is damaged. 2. The seat return pin spring is jammed in the up position.	1. Refer to Replacing the Seat Switch. 2. Loosen and lubricate the jammed parts so that the pin operates freely. Replace the spring if it is damaged.
The engine stops regardless of the shift selector or mow pedal position (even if both are in Neutral) as you get off of the seat.	1. The mow/lift switch and/or traction switch are adjusted incorrectly or are damaged. 2. The mow/lift and/or traction switch wires are loose. 3. The traction switch extension plug wires are loose. 4. The “B” terminal wire of the key switch is loose.	1. Refer to Replacing the Mow/Lift Switch and Replacing the Traction Switch. 2. Connect the wires. 3. Connect the wires. 4. Connect the wires.
The engine does not stop when the ignition key is rotated to the Off position.	1. The ignition switch connection is loose. 2. The ignition switch is damaged. 3. The wires in the connector have shorted. 4. The engine timing or carburetor adjustment is incorrect.	1. Push the connector onto the ignition switch terminals. 2. Replace the ignition switch. 3. Repair the affected wires. 4. Adjust the carburetor or engine timing.
The battery does not charge.	1. A fuse is blown or missing. 2. The electrical system has a loose wire. 3. The regulator or engine charging circuit is damaged.	1. Install a new fuse. 2. Check all connections and make all necessary repairs. 3. Install a new regulator or repair the engine charging circuit.

The Toro General Commercial Products Warranty

A Two-Year Limited Warranty

Conditions and Products Covered

The Toro Company and its affiliate, Toro Warranty Company, pursuant to an agreement between them, jointly warrant your 1996 or newer Toro Commercial Product ("Product") purchased after January 1, 1997, to be free from defects in materials or workmanship for two years or 1500 operational hours*, whichever occurs first. Where a warrantable condition exists, we will repair the Product at no cost to you including diagnosis, labor, parts, and transportation. This warranty begins on the date the Product is delivered to the original retail purchaser.

* Product equipped with hour meter

Instructions for Obtaining Warranty Service

You are responsible for notifying the Commercial Products Distributor or Authorized Commercial Products Dealer from whom you purchased the Product as soon as you believe a warrantable condition exists.

If you need help locating a Commercial Products Distributor or Authorized Dealer, or if you have questions regarding your warranty rights or responsibilities, you may contact us at:

Toro Commercial Products Service Department
Toro Warranty Company
8111 Lyndale Avenue South
Bloomington, MN 55420-1196
952-888-8801 or 800-982-2740
E-mail: commercial.service@toro.com

Owner Responsibilities

As the Product owner, you are responsible for required maintenance and adjustments stated in your operator's manual. Failure to perform required maintenance and adjustments can be grounds for disallowing a warranty claim.

Items and Conditions Not Covered

Not all product failures or malfunctions that occur during the warranty period are defects in materials or workmanship. This express warranty does not cover the following:

- Product failures which result from the use of non-Toro replacement parts, or from installation and use of add-on, modified, or unapproved accessories
- Product failures which result from failure to perform required maintenance and/or adjustments
- Product failures which result from operating the Product in an abusive, negligent or reckless manner
- Parts subject to consumption through use unless found to be defective. Examples of parts which are consumed, or used up, during normal Product operation include, but are not limited to, blades, reels, bedknives, tines, spark plugs, castor wheels, tires, filters, belts, etc.
- Failures caused by outside influence. Items considered to be outside influence include, but are not limited to, weather, storage practices, contamination, use of unapproved coolants, lubricants, additives, or chemicals, etc.
- Normal "wear and tear" items. Normal "wear and tear" includes, but is not limited to, damage to seats due to wear or abrasion, worn painted surfaces, scratched decals or windows, etc.

Parts

Parts scheduled for replacement as required maintenance are warranted for the period of time up to the scheduled replacement time for that part.

Parts replaced under this warranty become the property of Toro. Toro will make the final decision whether to repair any existing part or assembly or replace it. Toro may use factory remanufactured parts rather than new parts for some warranty repairs.

General Conditions

Repair by an Authorized Toro Distributor or Dealer is your sole remedy under this warranty.

Neither The Toro Company nor Toro Warranty Company is liable for indirect, incidental or consequential damages in connection with the use of the Toro Products covered by this warranty, including any cost or expense of providing substitute equipment or service during reasonable periods of malfunction or non-use pending completion of repairs under this warranty. Except for the Emissions warranty referenced below, if applicable, there is no other express warranty. All implied warranties of merchantability and fitness for use are limited to the duration of this express warranty.

Some states do not allow exclusions of incidental or consequential damages, or limitations on how long an implied warranty lasts, so the above exclusions and limitations may not apply to you.

This warranty gives you specific legal rights, and you may also have other rights which vary from state to state.

Note regarding engine warranty: The Emissions Control System on your Product may be covered by a separate warranty meeting requirements established by the U.S. Environmental Protection Agency (EPA) and/or the California Air Resources Board (CARB). The hour limitations set forth above do not apply to the Emissions Control System Warranty. Refer to the Engine Emission Control Warranty Statement printed in your operator's manual or contained in the engine manufacturer's documentation for details.

Countries Other than the United States or Canada

Customers who have purchased Toro products exported from the United States or Canada should contact their Toro Distributor (Dealer) to obtain guarantee policies for your country, province, or state. If for any reason you are dissatisfied with your Distributor's service or have difficulty obtaining guarantee information, contact the Toro importer. If all other remedies fail, you may contact us at Toro Warranty Company.

Part No. 374-0031 Rev. –