Form No. 3327–359

Electric Starter Kit

Proline Mid–Size Mowers

Part No. 104–8580

Addendum

Important The following instructions are for Gear Drive Pistol Grip Mid–Size Mowers only.

Installing the Battery Holder

1. Remove left drive tire.
2. Remove the front carrier frame mounting bolt.
3. Align the battery holder so the back hole is aligned with the carrier frame hole (Fig. 1 and 2).
4. Using the battery holder as a template, mark and drill a 17/32 in. hole (Fig. 1).

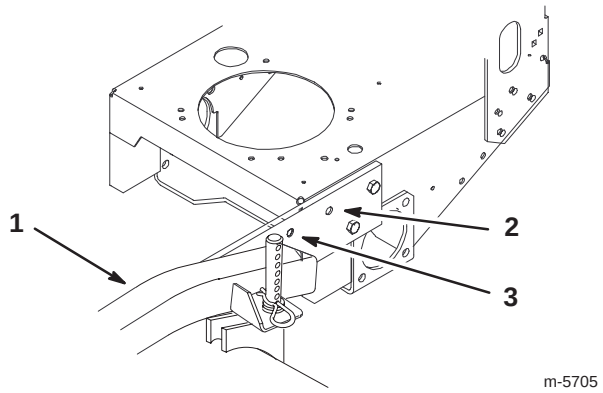

Figure 1

1. Carrier frame
2. Carrier frame hole
3. Drill a 17/32 in. hole

5. Mount battery holder to the left side of machine with 2 bolts (1/2 x 1–3/4 in.) and 2 nuts (1/2 in.) (Fig 2).
6. Peel off backing from battery pad and affix pad to battery holder (Fig 2). Rubber battery pad should be centered on battery holder.

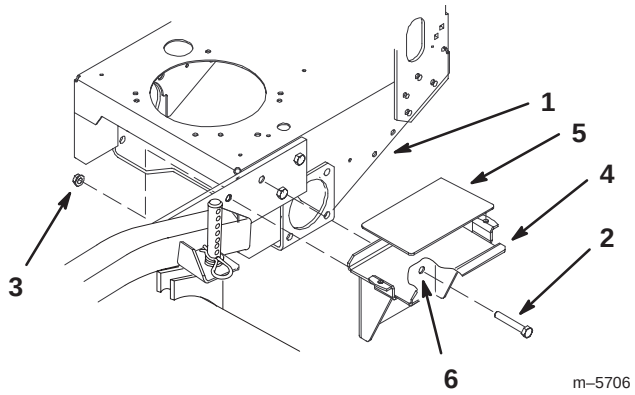

Figure 2

1. Left side of machine
2. Bolt, 1/2 x 1–3/4 in.
3. Nut, 1/2 in.
4. Battery holder
5. Battery pad
6. Back hole of holder

© 2001 by The Toro Company
8111 Lyndale Avenue South
Bloomington, MN 55420-1196

All Rights Reserved
Printed in the USA