Form No. 3455-196 Rev A

TORO®

Count on it.

Parts Catalog

MB TX 2500 Tracked Mud Buggy

Model No. 68138—Serial No. 412337958 and Up

Register at www.Toro.com.
Original Instructions (EN)

3455-196 A

Ordering Replacement Parts

To order replacement parts, please supply the part number, the quantity, and the description of each part desired.

Understanding Reference Numbers

Each identified part in an illustration has a reference number. The reference number for a part also appears in the parts list, along with other information about the part.

This catalog uses two special reference number formats, one to indicate parts in a service assembly and another to indicate the quantity of a given part in an illustration.

Service Assembly Reference Numbers

Parts in service assemblies have reference numbers in the form a:b. The a represents the reference number of the entire service assembly and the b represents a sequential number unique to each part within the service assembly.

For example, a wheel assembly might be identified by reference number 6, the tire by 6:1, the valve by 6:2, and the wheel by 6:3. When you order the assembly identified by reference number 6, you receive all parts identified by reference numbers 6:1,6:2, and 6:3. However, you may also order any part individually. Reference numbers of this type appear in illustration and in parts lists.

Reference Numbers Indicating Quantity

In an illustration, if a reference number indicates more than one part, the reference number has the form nX y. The n represents the quantity of the part, the X is the multiplication symbol, and the y represents the reference number.

For example, in an illustration, the reference number 2X 37 means that two of the parts identified by reference number 37 are indicated.

Contents

Frame Assembly 4
Hydraulic Pump Assembly 6
LH Hydro Transaxle Assembly No. 132-8802 8
RH Hydro Transaxle Assembly No. 132-8803 10
Hydraulic Manifold Assembly No. 132-8989 12
Engine Assembly 14
Hydraulic Gear Pump Assembly No. 132-8954 16
Fuel Tank and Tower Assembly 18
Track Assembly 20
Hopper Assembly 22
Electrical Harness Assembly 24
Control Assembly 26
Platform Assembly 28
Hood Assembly 30
Attachments and Accessories 32

© 2022—The Toro® Company
8111 Lyndale Avenue South
Bloomington, MN 55420

Contact us at www.Toro.com.
Printed in the USA.
All Rights Reserved

Frame Assembly

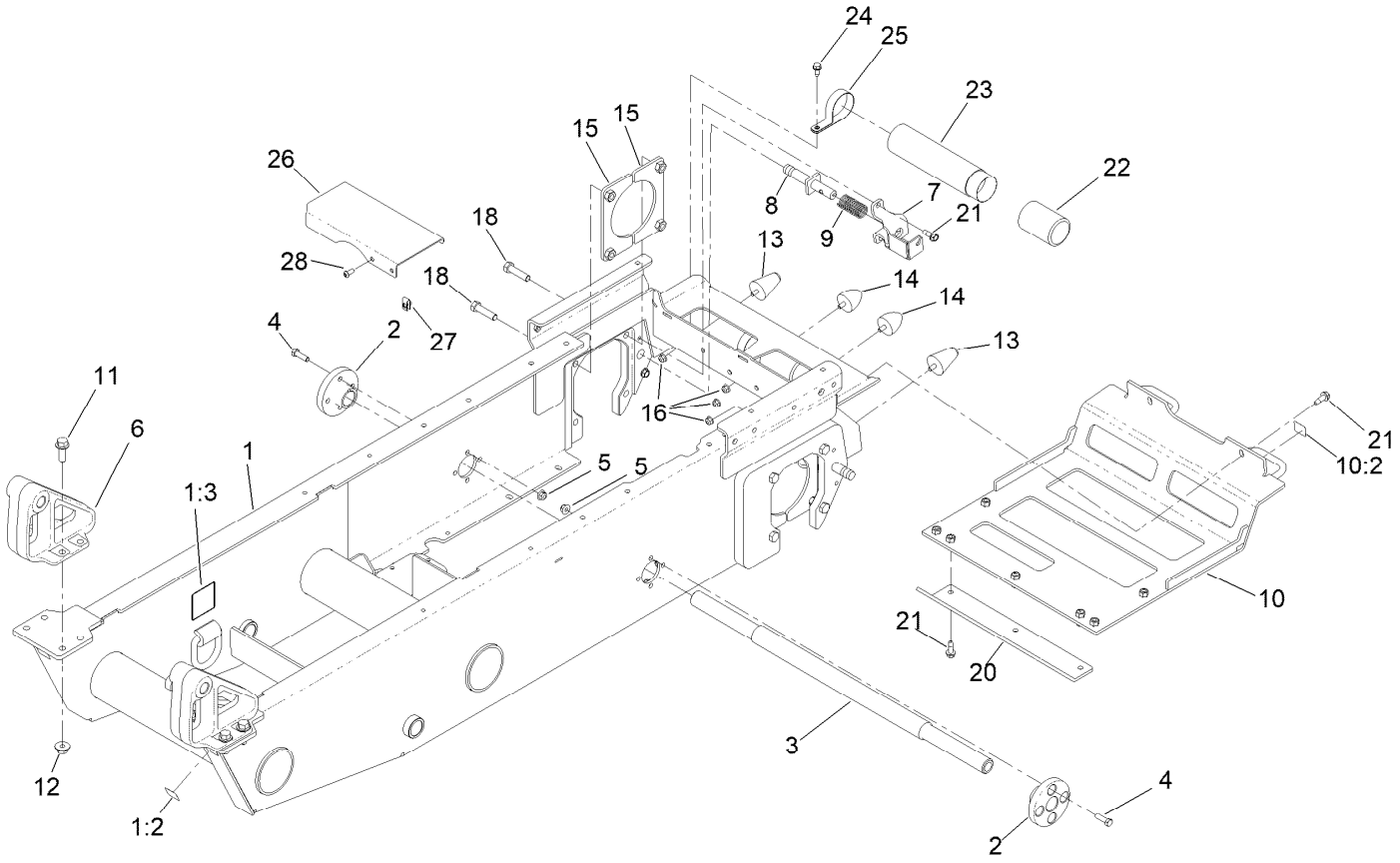

Frame Assembly (continued)

Ref.	Part Number	Qty.	Description
1	139-7198	1	Frame ASM- Straight
1:2	125-4967	2	Decal-Lift Here
1:3	132-9051	2	Decal-Tiedown
2	132-9075	2	Hub-Mount, Track
3	125-0425	1	Shaft-Track
4	323-7	8	Screw-HH
5	104-8301	8	Nut-HF, NI
6	132-9025-03	2	Pivot-Dump
7	130-5284-03	2	Bracket-Brake
8	132-8866	2	Shaft-Brake
9	125-0344	2	Spring-Compression
10	136-4651	1	Plate-Side
10:2	132-9051	2	Decal-Tiedown
11	130-6482	8	Screw-HHF
12	32128-52	8	Nut-Lock, Flange
13	114-1925	2	Bumper-Rubber
14	114-1926	2	Bumper-Rubber
15	132-8936-0P	4	Hydro Mounting Plate ASM
16	104-8300	4	Nut-HF, NI
18	325-8	8	Screw-HH
20	136-4611-03	1	Plate-Skid
21	105-6245	13	Screw-Tapping
22	104-7048	1	Cap-Housing
23	104-7050	1	Tube-Manual
24	32144-70	2	Screw-HWHTF
25	2412-133	2	Clamp-R
26	144-7389-03	1	Bracket, Manifold Shield
27	115-7721	2	Nut-Clip, U
28	3274-55	2	Screw-HSBH

Hydraulic Pump Assembly

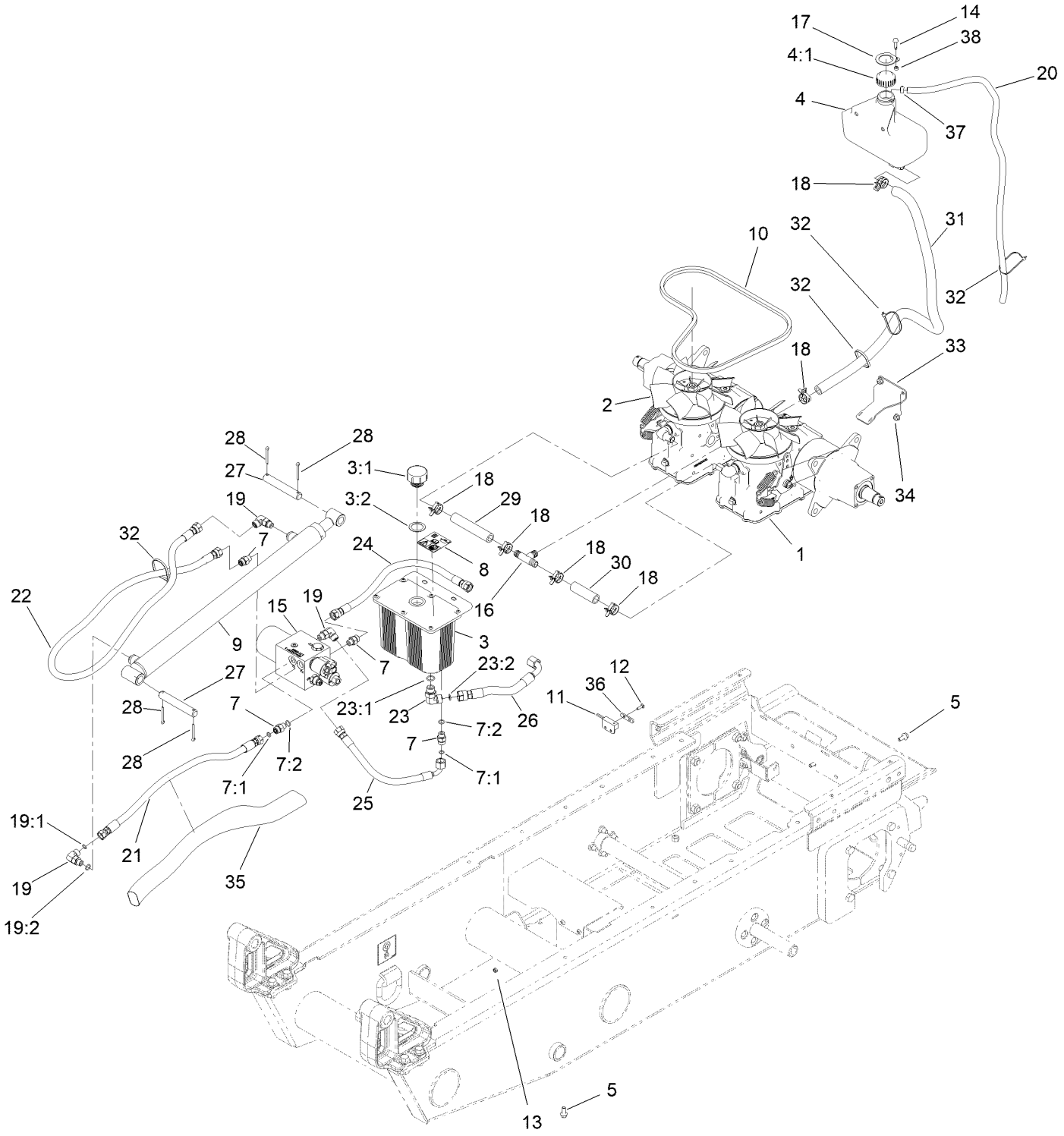

Hydraulic Pump Assembly (continued)

Ref.	Part Number	Qty.	Description
1	132-8802	1	LH Hydro Transaxle ASM
2	132-8803	1	RH Hydro Transaxle ASM
3	109-0448	1	Tank-Hydraulic
3:1	103-1948	1	Cap-Reservoir, HYD
3:2	103-1949	1	Gasket-Cap
4	138-3164	1	Tank-Hydraulic
4:1	133-8677	1	Cap-Vented
5	3234-47	5	Screw-HHF
7	340-2	4	Fitting-Straight
7:1	237-22	1	O-Ring
7:2	237-42	1	O-Ring
8	115-4212	1	Decal-Warning
9	132-8835	1	Cylinder-Hydraulic
9:1	132-9084	1	Seal Kit ●
10	138-7157	1	Belt And Spring Kit
11	100-1270	1	Switch-Proximity
12	3229-20	2	Screw-CARR
13	3296-2	2	Nut-Lock, NI
14	137-3711	1	Screw
15	132-8989	1	Hydraulic Manifold ASM
16	132-5127	1	Tee
17	136-0549-01	1	Lock-Tank
18	144-2248	6	Clamp-Sc Band
19	340-77	3	Fitting-Elbow, 90 DEG
19:1	237-22	1	O-Ring
19:2	237-42	1	O-Ring
20	132-7563	1	Hose-Breather, Transmission
21	132-8941	1	Hose-Hydraulic
22	144-7464	1	Hose ASM-HYD
23	340-98	1	Fitting-Elbow, 90 DEG
23:1	237-79	1	O-Ring
23:2	237-30	1	O-Ring
24	144-7465	1	Hose ASM-HYD
25	144-7466	1	Hose ASM-HYD
26	144-7468	1	Hose ASM-HYD
27	105-7456	2	Pin-Pivot
28	3272-23	4	Pin-Cotter
29	132-8933	1	Hose-HYD, Hydro
30	132-8934	1	Hose-HYD, Hydro
31	132-8935	1	Hose-HYD, Hydro
32	3290-378	4	Tie-Cable
33	132-9032-03	1	Bracket-Hose Retainer
34	104-8300	2	Nut-HF, NI
35	100-6127	1	Sleeve-Protective
36	132-9092	1	Plate-Switch, Proximity
37	92-2379	1	Clamp-Hose
38	126-0416	1	Spacer

● Not illustrated

LH Hydro Transaxle Assembly No. 132-8802

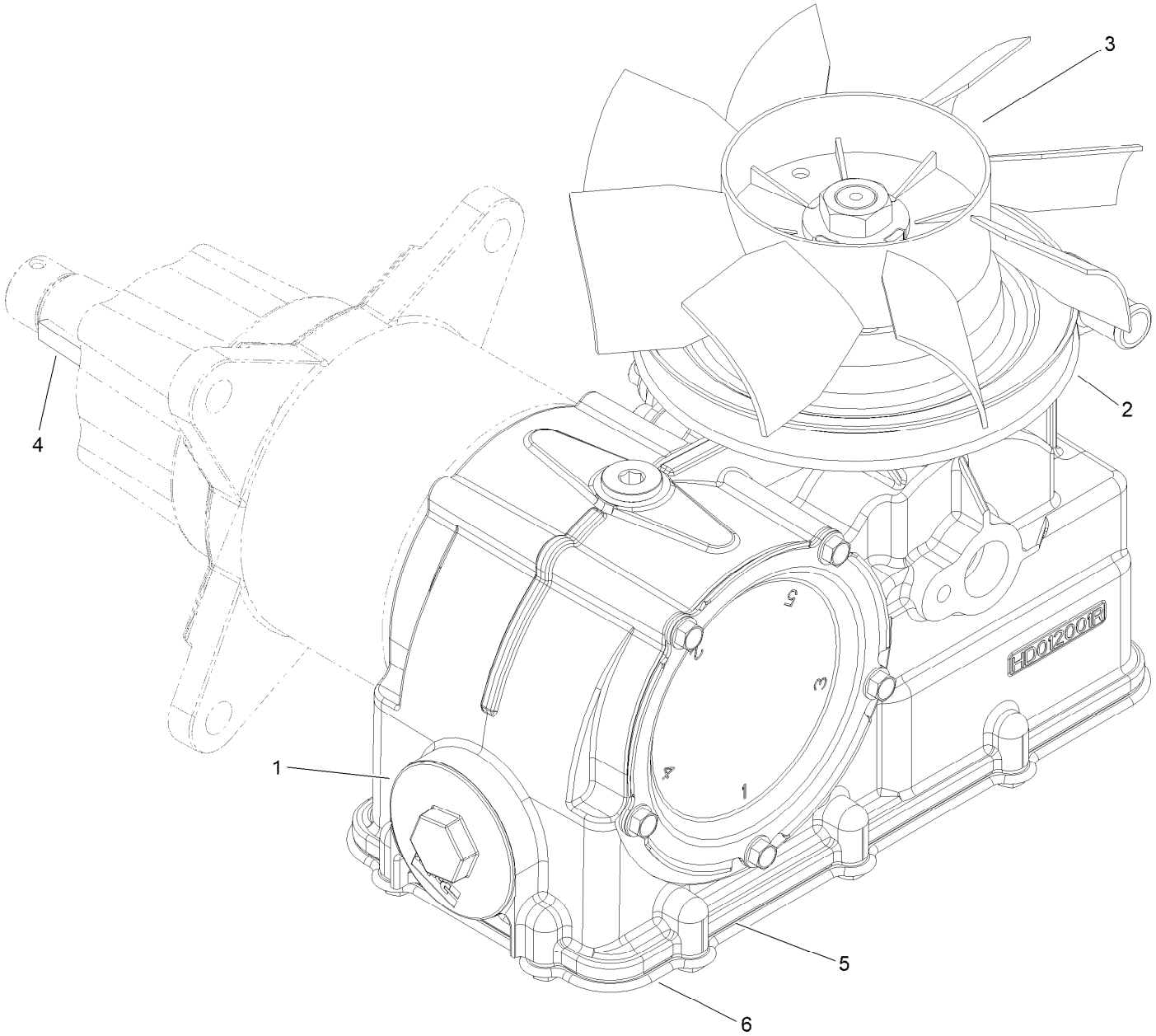

LH Hydro Transaxle Assembly No. 132-8802 (continued)

Ref.	Part Number	Qty.	Description
1	137-3772	1	Filter
2	137-3773	1	Pulley
3	137-3774	1	Fan (8.3 Inch)
4	3257-42	1	Key-Woodruff
5	140-1148	1	Gasket-Cover, Bottom
6	139-7233	1	Cover-Service
7	145-1155	1	Kit-Seal, Motor ●
8	145-1156	1	Seal-Shaft ●
9	145-1166	1	Rtn ASM (LH) ●

● Not illustrated

RH Hydro Transaxle Assembly No. 132-8803

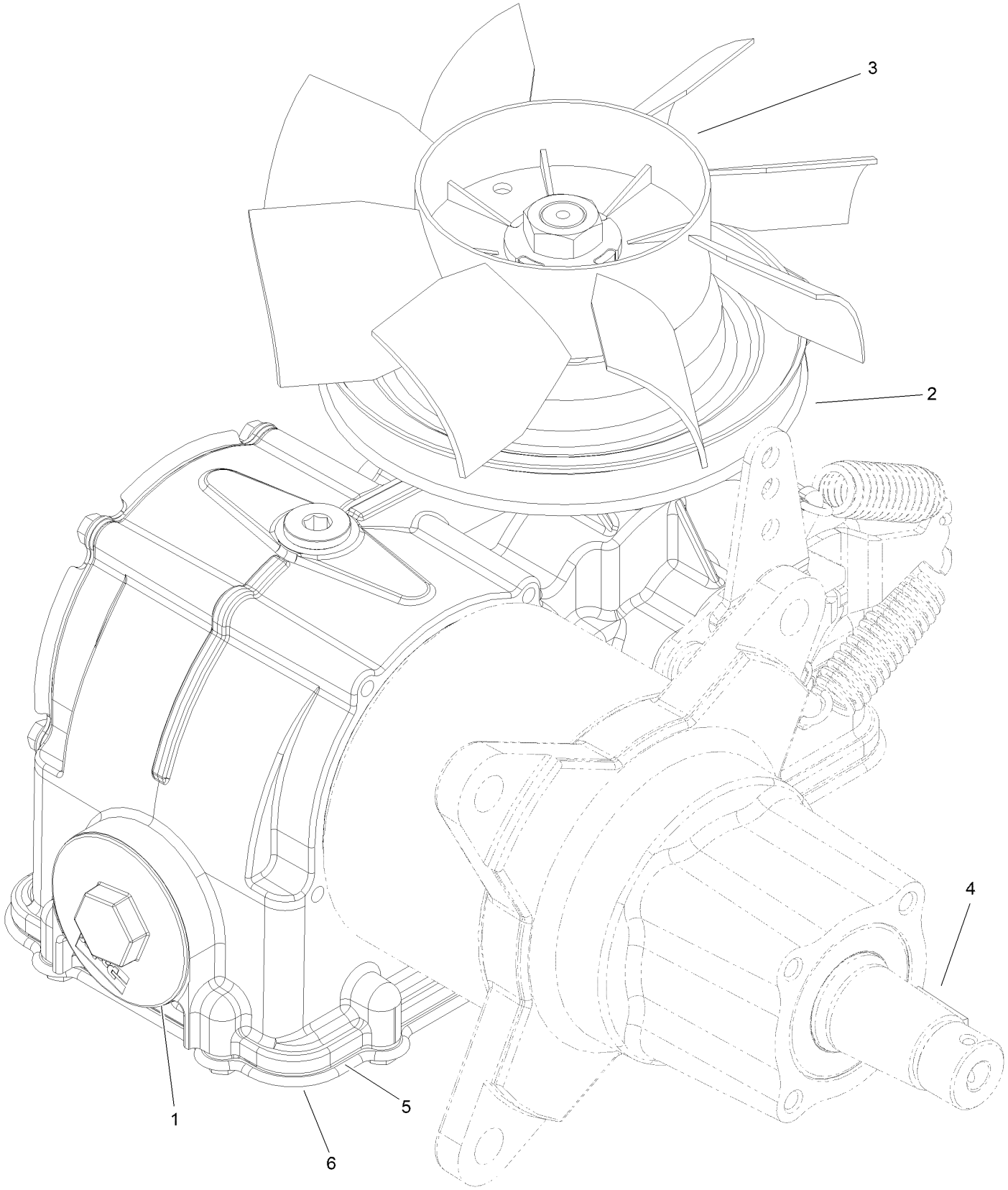

RH Hydro Transaxle Assembly No. 132-8803 (continued)

Ref.	Part Number	Qty.	Description
1	137-3772	1	Filter
2	137-3773	1	Pulley
3	137-3774	1	Fan (8.3 Inch)
4	3257-42	1	Key-Woodruff
5	140-1148	1	Gasket-Cover, Bottom
6	139-7233	1	Cover-Service
7	145-1155	1	Kit-Seal, Motor ●
8	145-1156	1	Seal-Shaft ●
9	145-1167	1	Rtn ASM (RH) ●

● Not illustrated

Hydraulic Manifold Assembly No. 132-8989

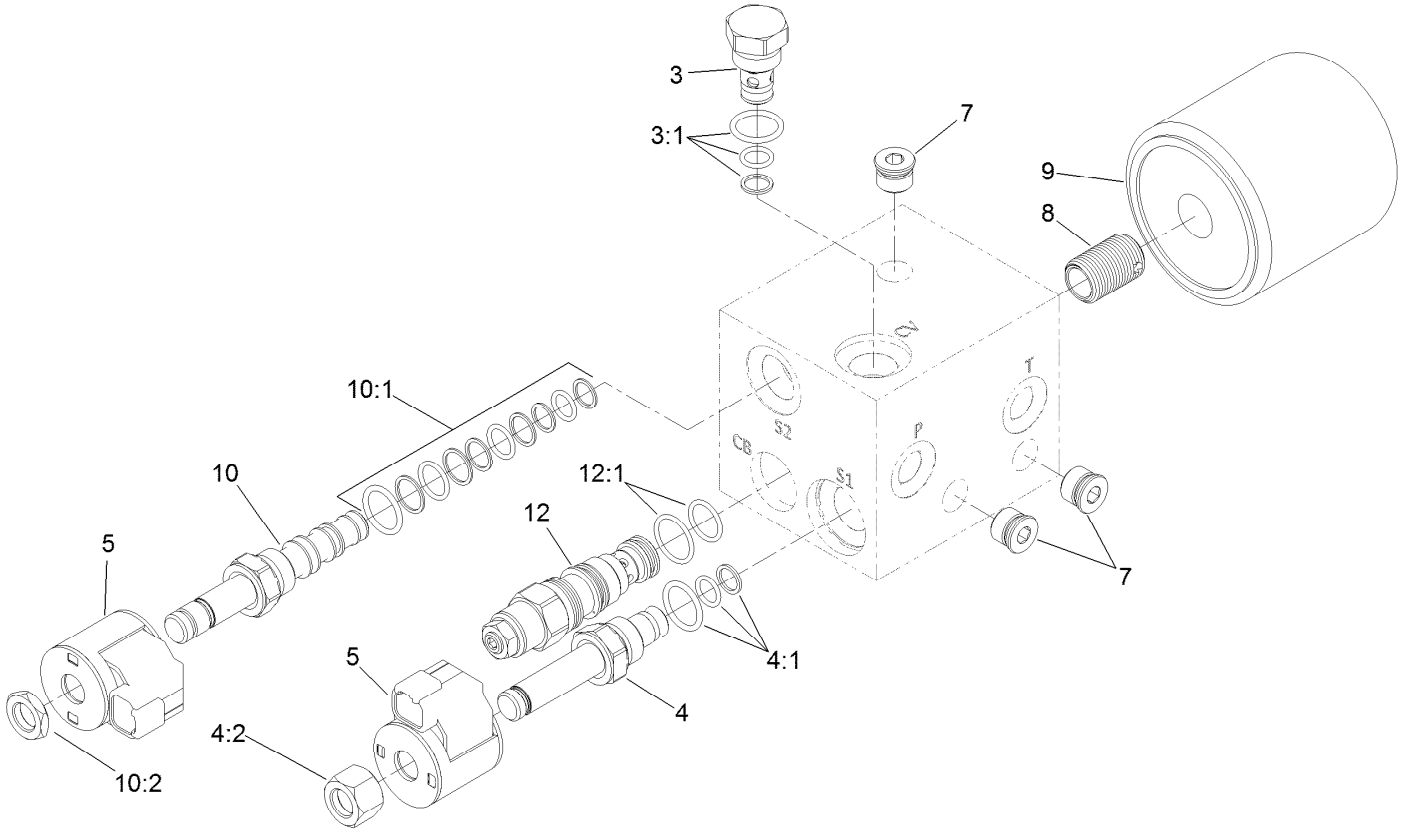

Hydraulic Manifold Assembly No. 132-8989 (continued)

Ref.	Part Number	Qty.	Description
3	105-9321	1	Check Valve ASM
3:1	105-9156	1	Seal Kit
4	107-7517	1	Valve-Solenoid
4:1	105-9156	1	Seal Kit
4:2	107-7812	1	Nut-Solenoid
5	119-8036	2	Coil
7	112-9213	3	Plug

Ref.	Part Number	Qty.	Description
8	127-3885	1	Nipple-Filter
9	1-633750	1	Filter-Oil, HYD
10	120-1665	1	Valve-Solenoid
10:1	112-6520	1	Seal Kit
10:2	110-2634	1	Nut-Coil
12	114-5082	1	Valve-Balance, Counter
12:1	114-5083	1	Seal Kit

Engine Assembly

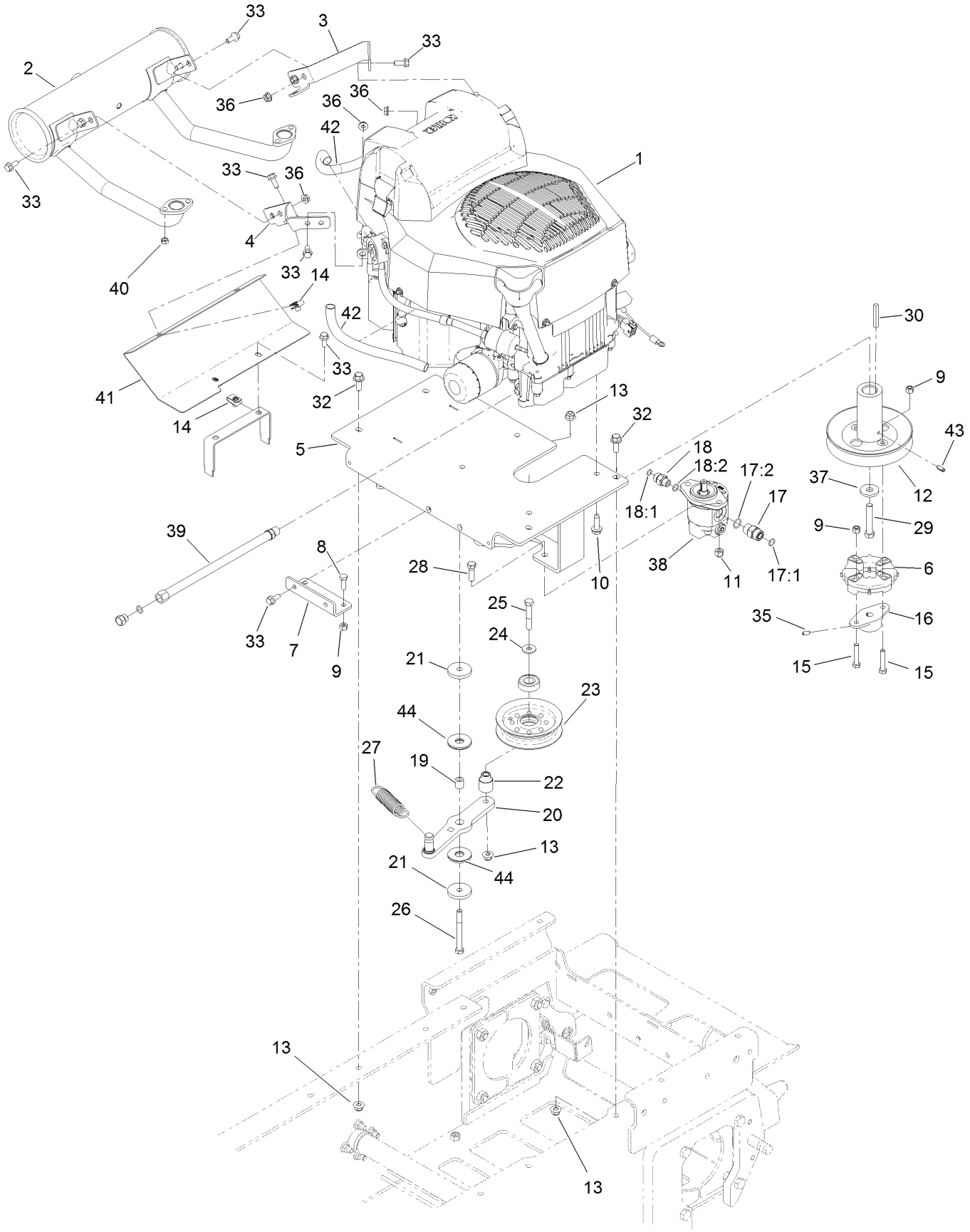

Engine Assembly (continued)

Ref.	Part Number	Qty.	Description
1	139-7245	1	Engine-Kohler, Zt740 [service]
2	132-8995	1	Muffler-Kohler
3	132-8916-03	1	Bracket-Muffler
4	132-8917-03	1	Bracket-Muffler
5	132-8907-0P	1	Engine Plate ASM (Welded)
6	119-0652	1	Coupler-Rubber
7	132-8940-03	1	Bracket-Tank, Hydro
8	322-5	2	Screw-HH
9	3296-29	6	Nut-Lock, NI
10	32144-109	4	Screw-Thd
11	125-5069	2	Nut-Hex
12	132-8938	1	Pulley-Engine
13	104-8301	6	Nut-HF, NI
14	115-7721	4	Nut-Clip, U
15	322-9	4	Screw-HH
16	132-9033	1	Hub-Pump
17	340-4	1	Fitting-Straight
17:1	237-30	1	O-Ring
17:2	237-79	1	O-Ring
18	340-2	1	Fitting-Straight
18:1	237-22	1	O-Ring
18:2	237-42	1	O-Ring
19	75-5270	1	Spacer-Knob, Seat
20	132-9086-03	1	Arm-Idler
21	110-9981	2	Washer-Plain
22	132-9080	1	Bushing-Idler
23	116-3626	1	Pulley-Idler
24	80-6990	1	Washer-Hardened
25	323-12	1	Screw-HH
26	323-15	1	Screw-HH
27	138-7110	1	Spring-Extension
28	323-6	2	Screw-HH
29	3212-10	1	Screw-HH
30	103-4177	1	Key
32	3234-42	4	Screw-HHF
33	3234-47	14	Screw-HHF
35	3245-9	2	Screw-Set, HSH
36	32128-26	8	Nut-HF
37	110-6147	1	Washer-Flat
38	132-8954	1	Pump-Gear
39	117-1261	1	Hose-Drain, Oil
40	114-3549	4	Nut
41	139-7232-03	1	Shield-Muffler
42	136-4617	2	Sleeve-Thermal
43	32121-134	1	Pin-Roll
44	114-0463	2	Washer-Friction, Composite

Hydraulic Gear Pump Assembly No. 132-8954

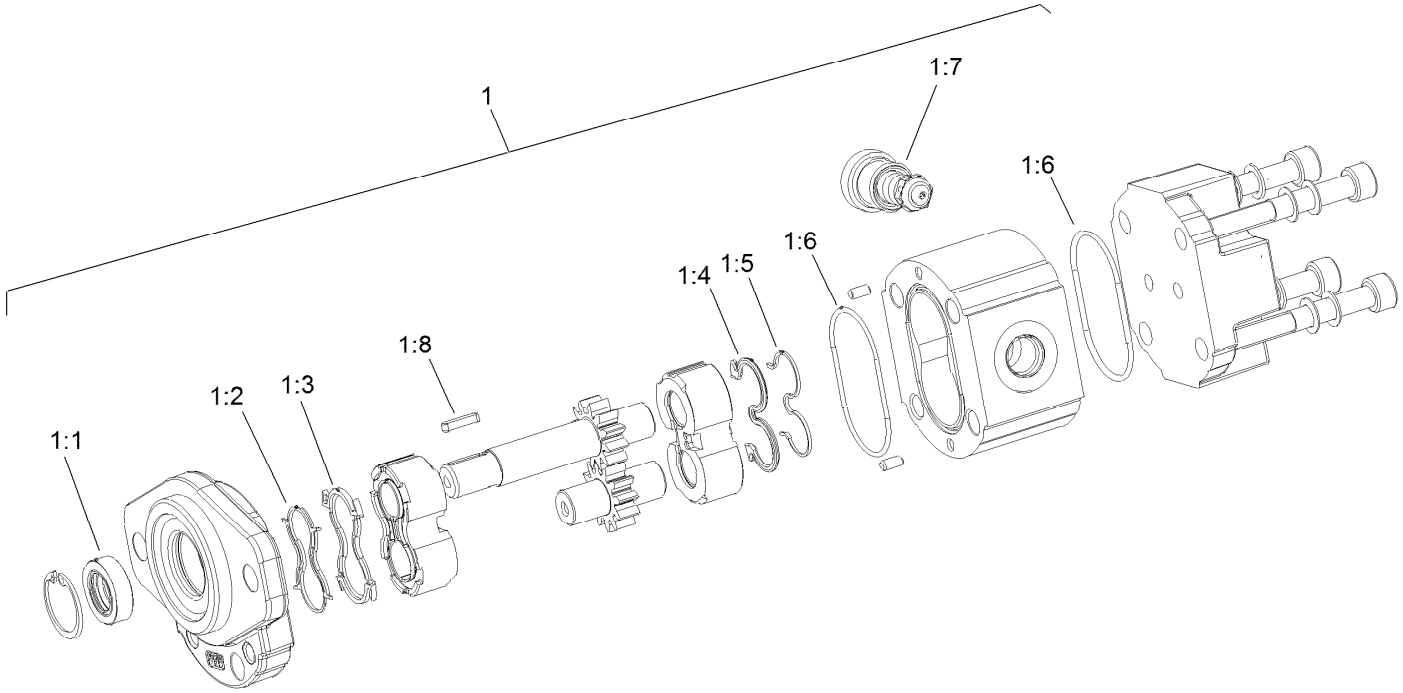

Hydraulic Gear Pump Assembly No. 132-8954 (continued)

Ref.	Part Number	Qty.	Description
1	132-8969	1	Seal-Kit
1:1		1	Shaft Seal ●
1:2		1	Anti Extrusion ●
1:3		1	Upper Seal ●
1:4		1	Seal ●
1:5		1	Anti Extrusion ●
1:6		2	O-Ring Seal ●
1:7		1	O-Ring Seal ●
1:8		1	Key ●

● Not serviced separately

Fuel Tank and Tower Assembly

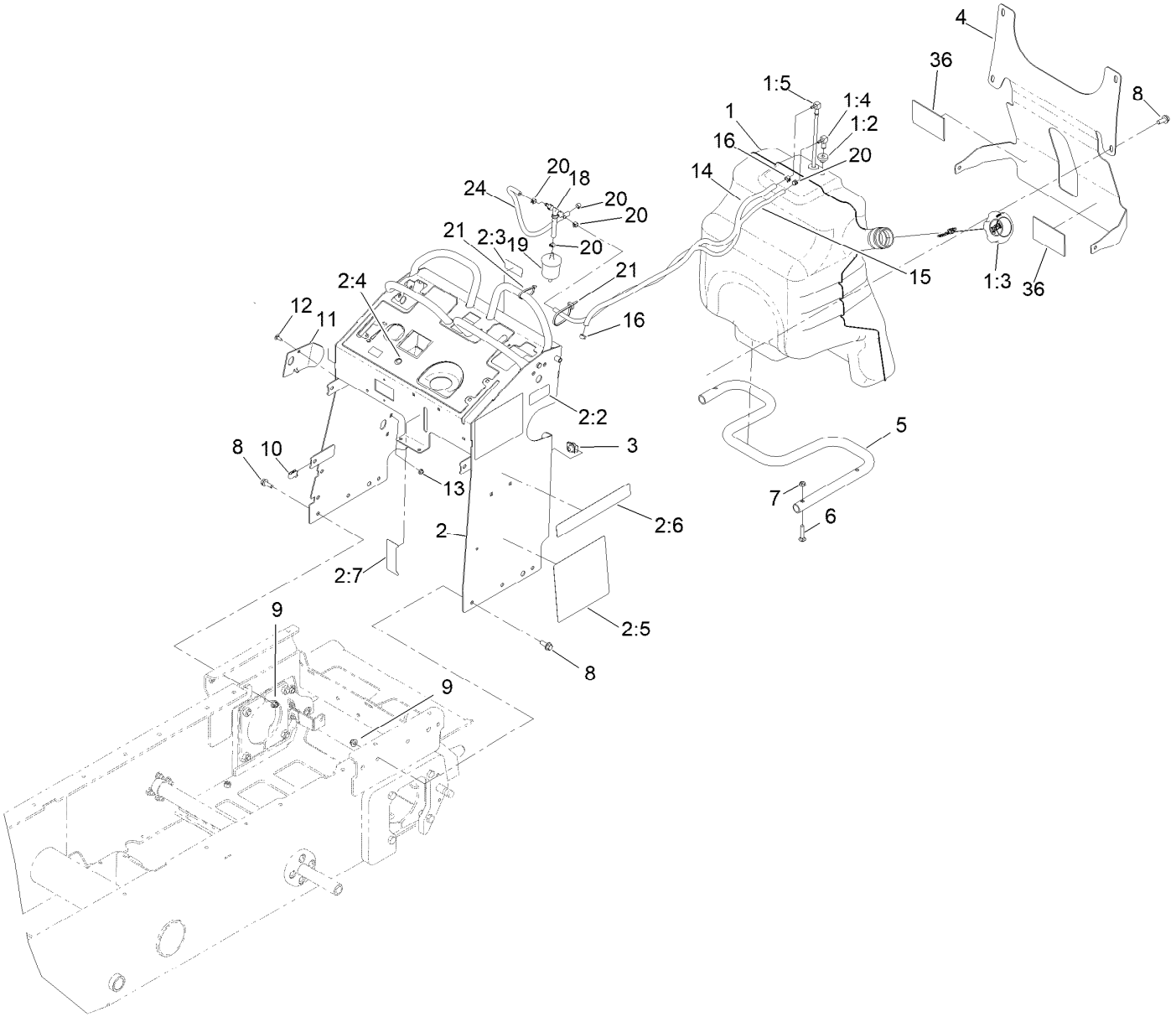

Fuel Tank and Tower Assembly (continued)

Ref.	Part Number	Qty.	Description
1	132-7560	1	Fuel Tank ASM
1:2	46-6560	2	Bushing
1:3	137-4127	1	Cap-Fuel
1:4	104-5228	1	Fitting-Elbow, 90 DEG
1:5	145-6195	1	ASM, Tube-Fuel
2	139-7221	1	Tower ASM
2:2	116-8775	1	Decal-Fill, Fuel
2:3	132-9052	1	Decal-Fuse
2:4	139-7219	1	Decal-Control Panel
2:5	138-7146	1	Decal-Service
2:6	132-9057	2	Decal
2:7	137-0575	1	Decal-Level, Oil
3	105-4886	4	Nut-Tinnerman
4	147-3226-03	1	Bracket-Cross
5	132-5161-01	1	Tube-Mount, Fuel Tank
6	3230-5	3	Bolt-CARR
7	104-8300	3	Nut-HF, NI
8	3234-42	10	Screw-HHF
9	104-8301	6	Nut-HF, NI
10	115-7721	5	Nut-Clip, U
11	131-7455	1	Plate-Striker
12	3229-11	1	Screw-CARR
13	104-7201	1	Nut-HF, NI
14	132-8929	1	Hose-Fuel [32"]
15	110-3958	1	Hose-Fuel
16	2412-98	2	Clamp-Hose
18	116-5464	1	Tee And Check
19	120-2235	1	Filter-Fuel
20	2412-146	5	Clamp-Hose
21	3290-378	1	Tie-Cable
24	132-9046	1	Hose-Vent
36	98-1386	2	Pad-Foam

Track Assembly

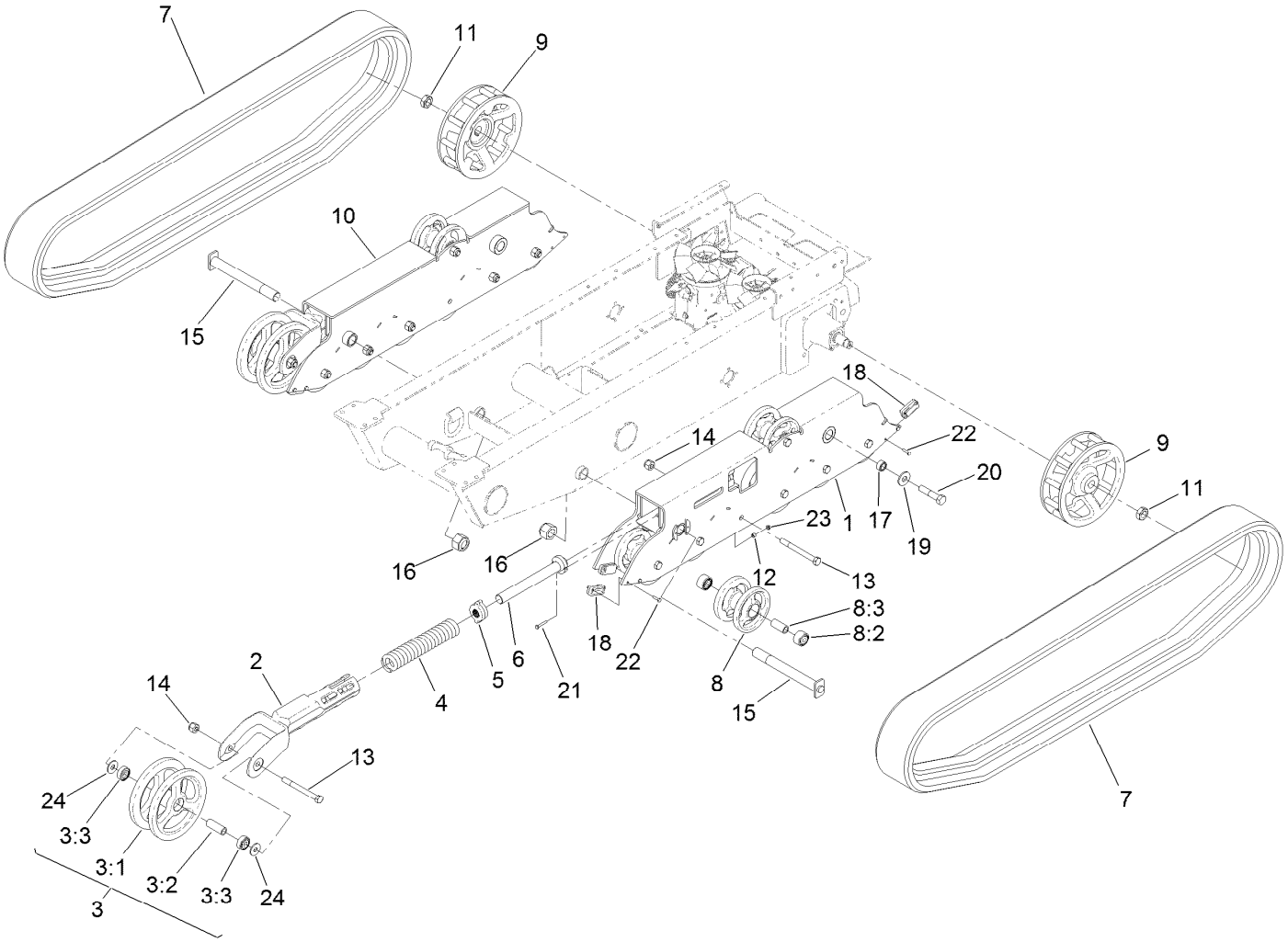

Track Assembly (continued)

Ref.	Part Number	Qty.	Description
1	132-8813-03	1	Mount-Wheel, LH
2	108-4691-03	2	Arm-Tensioner
3	104-5745	2	Tensioner Wheel ASM
3:1	104-5747-03	1	Wheel-Tensioner
3:2	98-9835	1	Spacer-Wheel, Tensioner
3:3	120-5378	2	Bearing-Ball
4	95-3624	2	Spring-Compression
5	108-4664	2	Block-Tensioner
6	127-9563	2	Bolt-Tensioner
7	137-8712	2	Track
8	138-5231	14	Wheel ASM
8:2	138-0547	2	Bearing-Ball
8:3	130-7564	1	Spacer-Wheel
9	132-8893-03	2	Wheel-Drive
10	132-8814-03	1	Mount-Wheel, RH
11	26-3790	2	Nut-Lock
12	98-4799	2	Spacer
13	327-17	16	Screw-HH
14	3296-24	16	Nut-Hex
15	130-1050	2	Pin-Track
16	125-0399	2	Nut-HH
17	132-8944	2	Spacer-Track, Outside Mount
18	132-6053	8	Block-Track
19	99-2659	2	Washer
20	328-5	2	Screw-HH
21	321-37	2	Screw-HH
22	321-6	16	Screw-HH
23	32128-32	2	Nut-HHF
24	3256-7	4	Washer-Flat

Hopper Assembly

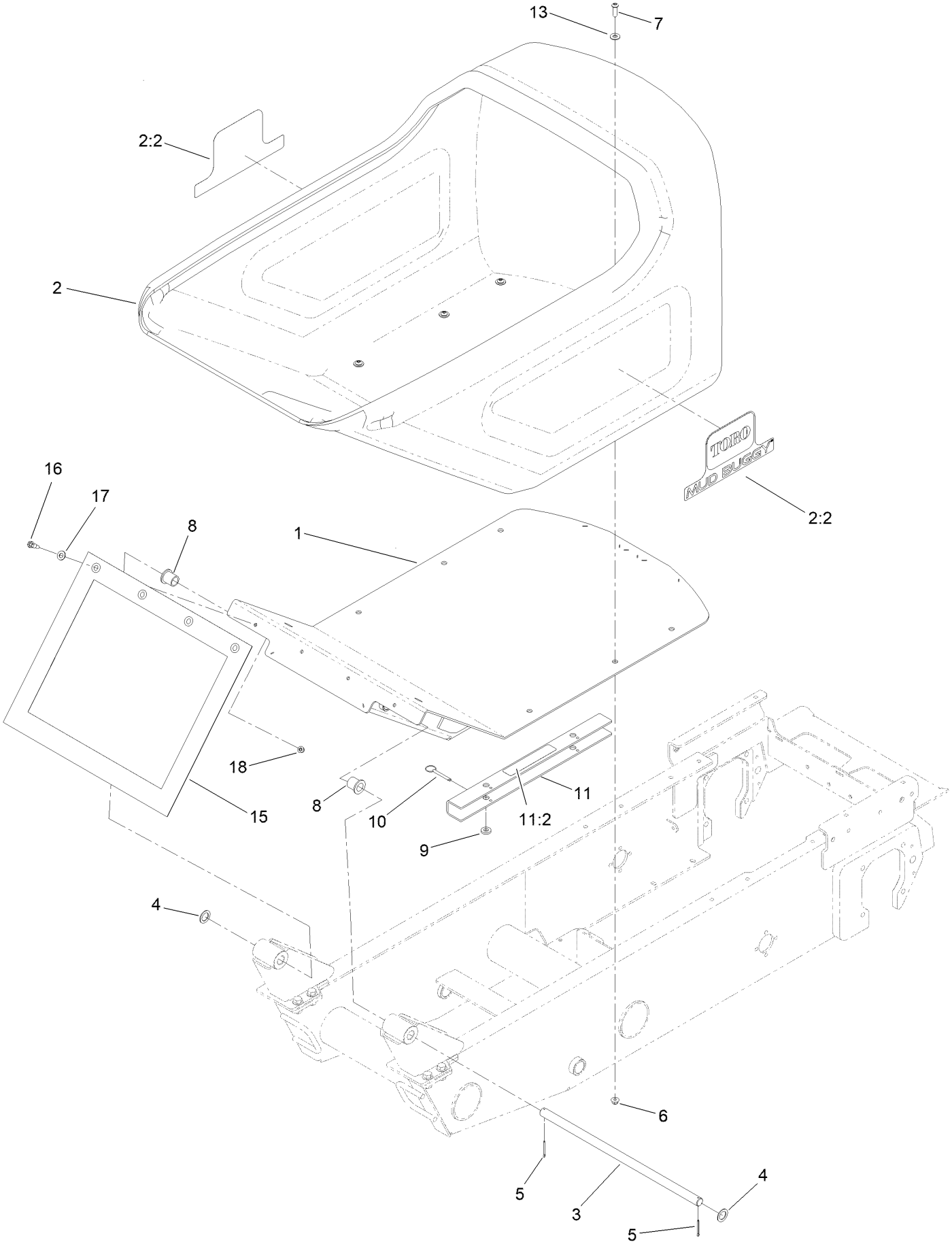

Hopper Assembly (continued)

Ref.	Part Number	Qty.	Description
1	139-7207	1	Frame-Hopper ASM
2	139-7240	1	Hopper-Mortar, ASM
2:2	139-7234	2	Decal-Mud Buggy
3	132-8854	1	Shaft-Pivot,Tub
4	99-4958	2	Spacer
5	3272-13	2	Pin-Cotter
6	104-8301	6	Nut-HF, NI
7	3274-63	6	Screw-HSBH
8	1-303514	2	Bearing-Flanged
9	83-1470	2	Washer-Neoprene
10	108-0094	2	Pin-Cotterless
11	130-5315	1	Arm-Locking
11:2	115-4858	1	Decal-Danger
13	3256-4	6	Washer-Flat
15	132-9044	1	Shield-Splatter
16	28-0540	4	Bolt-Shoulder
17	3256-25	4	Washer-Flat
18	104-8300	4	Nut-HF, NI

Electrical Harness Assembly

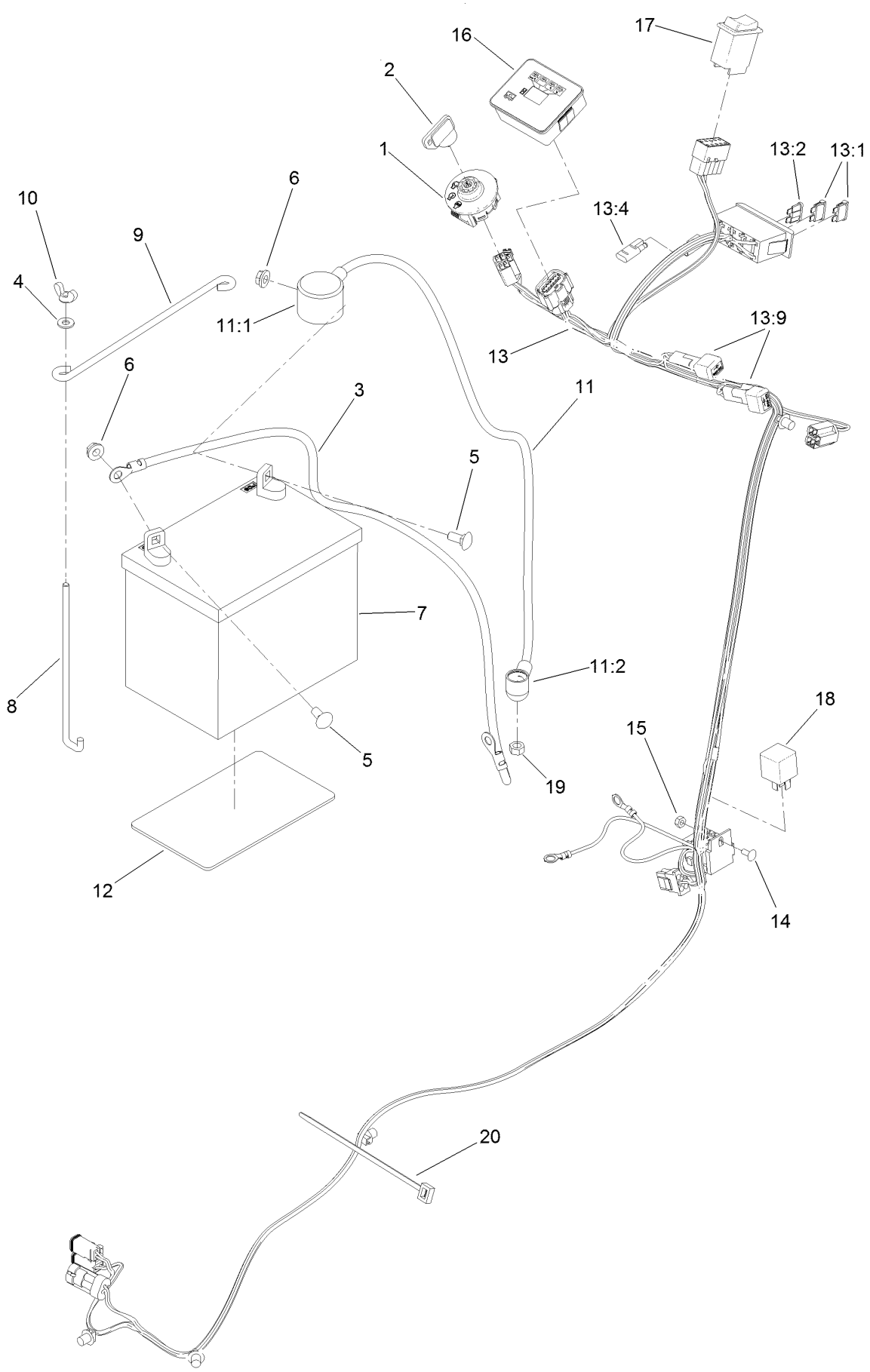

Electrical Harness Assembly (continued)

Ref.	Part Number	Qty.	Description
1	137-4101	1	Switch-Ignition
2	63-8360	1	Key-Ignition
3	117-7240	1	Cable-Battery, Negative
4	3256-22	2	Washer-Flat
5	3230-1	2	Bolt-CARR
6	32128-20	2	Nut-HF
7	104-4657	1	Battery (340 CCA, Wet)
8	100-6435	2	Post-Battery
9	100-6434	1	Rod-Hold Down, Battery
10	32103-22	2	Nut-Wing
11	109-7630	1	Positive Battery Cable ASM
11:1	109-2407	1	Insulator-Battery
11:2	1-543393	1	Insulator-Solenoid

Ref.	Part Number	Qty.	Description
12	62-4300	1	Pad-Skid, Anti
13	138-3138	1	Harness-Wire
13:1	109355	2	Fuse-Blade, 15 Amp
13:2	114241	1	Fuse-Blade, 7.5 Amp
13:4	116-0053	1	Cap-Plug
13:9	100-4918	2	Diode
14	1-807513	1	Bolt-CARR
15	3296-2	1	Nut-Lock, NI
16	132-8959	1	Module, Hour Meter
17	AU113664	1	Switch-Rocker, 2 Pole
18	1-643275	1	Relay
19	33014-00	1	Nut-Hex
20	3290-378	1	Tie-Cable

Control Assembly

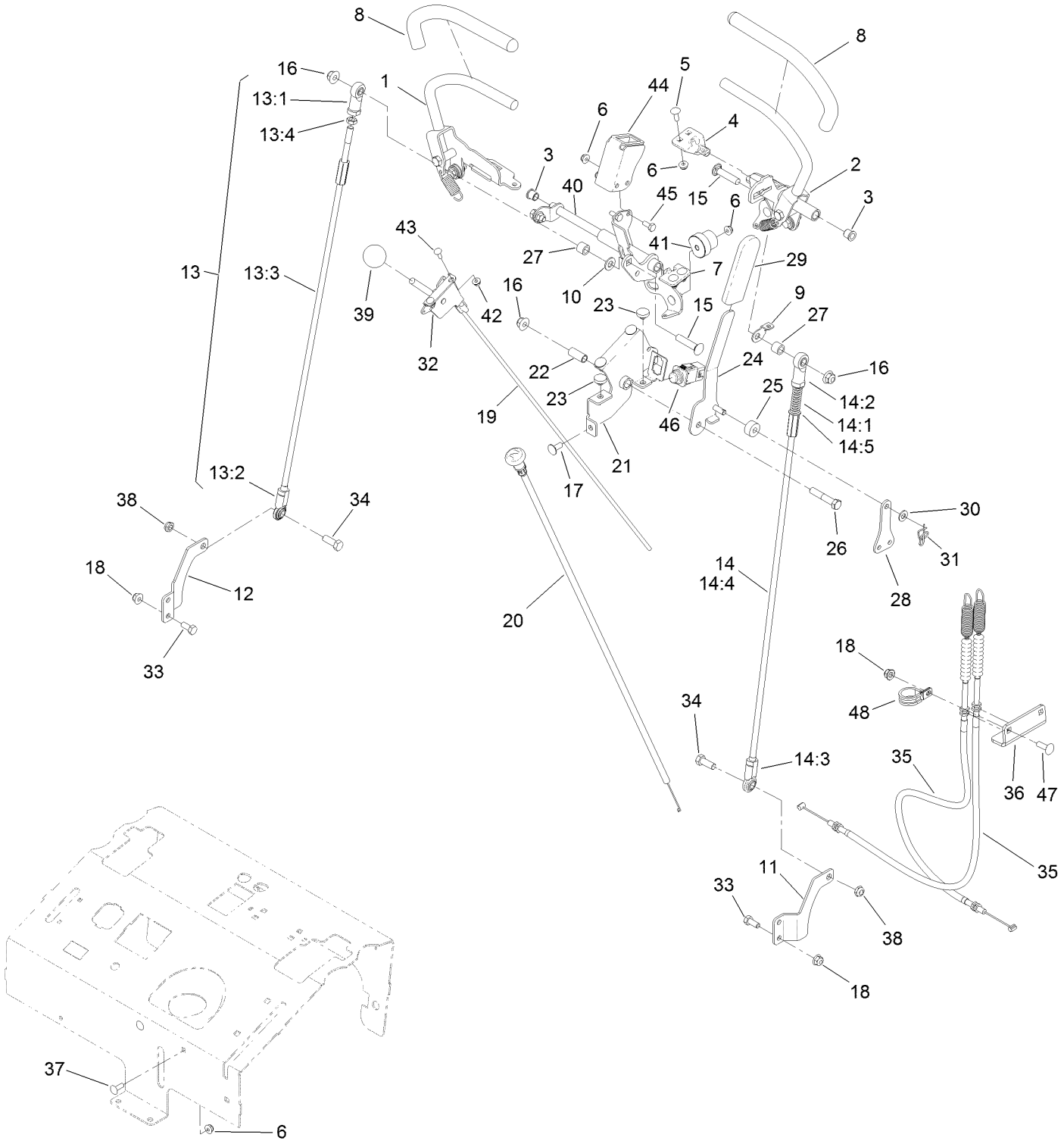

Control Assembly (continued)

Ref.	Part Number	Qty.	Description
1	132-9048	1	RH Control Handle ASM
2	132-9047	1	LH Control Handle ASM
3	103-9928	2	Bearing
4	120-3288	1	Tab-Pivot, LH
5	3229-1	4	Screw-CARR
6	104-7201	10	Nut-HF, NI
7	120-3287	1	Tab-Pivot, RH
8	119-0222	2	Grip
9	132-7538	1	Bracket-Adjustment, Speed
10	3256-24	1	Washer-Flat
11	131-5748-0P	1	Bracket-Hydro, LH (Primer)
12	131-5747-0P	1	Bracket-Hydro, RH (Black)
13	138-8642	1	RH Control Rod ASM
13:1	92-7008	1	End-Rod, Female
13:2	103-1167	1	Joint-Ball End, LH
13:3	138-8641	1	Rod-Control
13:4	3220-3	1	Nut-HJ
14	138-8643	1	LH Control Rod ASM
14:1	1-603807	1	Spring-Return, Neutral
14:2	92-7008	1	End-Rod, Female
14:3	103-1167	1	Joint-Ball End, LH
14:4	138-8641	1	Rod-Control
14:5	3256-45	2	Washer-Flat
15	3231-29	2	Screw-CARR
16	104-8301	3	Nut-HF, NI
17	3230-23	3	Bolt-CARR
18	104-8300	10	Nut-HF, NI
19	115-1211	1	Cable-Control
20	132-9035	1	Cable-Choke
21	132-8919-03	1	Bracket-Brake, Pivot
22	131-3562	1	Bearing-Sleeve
23	1-513658	2	Bumper
24	132-8920-03	1	Handle-Arm, Brake
25	132-9064	1	Bushing-Brake
26	323-10	1	Screw-HH
27	93-9847	2	Spacer
28	132-1188	1	Yoke-Cable
29	1-633268	1	Grip-Lever
30	93-6079	1	Spacer-Nylon
31	112-1491	1	Pin-Cotter
32	110-5547	1	Lever-Control
33	322-3	5	Screw-HH
34	323-6	2	Screw-HH
35	132-8921	2	Cable-Brake
36	132-8923-03	1	Bracket-Cable, Brake
37	3229-25	2	Screw-CARR
38	3296-59	2	Nut-Lock, NI
39	1-603175	1	Knob-Ball
40	132-9029-03	1	Pivot/Plate Switch ASM
41	126-1499	2	Cam
42	32128-17	2	Nut-Lock, Flange
43	1-807533	2	Bolt-CARR
44	132-9027-03	1	Bracket-Switch
45	321-3	2	Screw-HH
46	100-1268	1	Switch-Plunger
47	3230-22	2	Screw-CARR
48	2412-104	1	Clamp-R

Platform Assembly

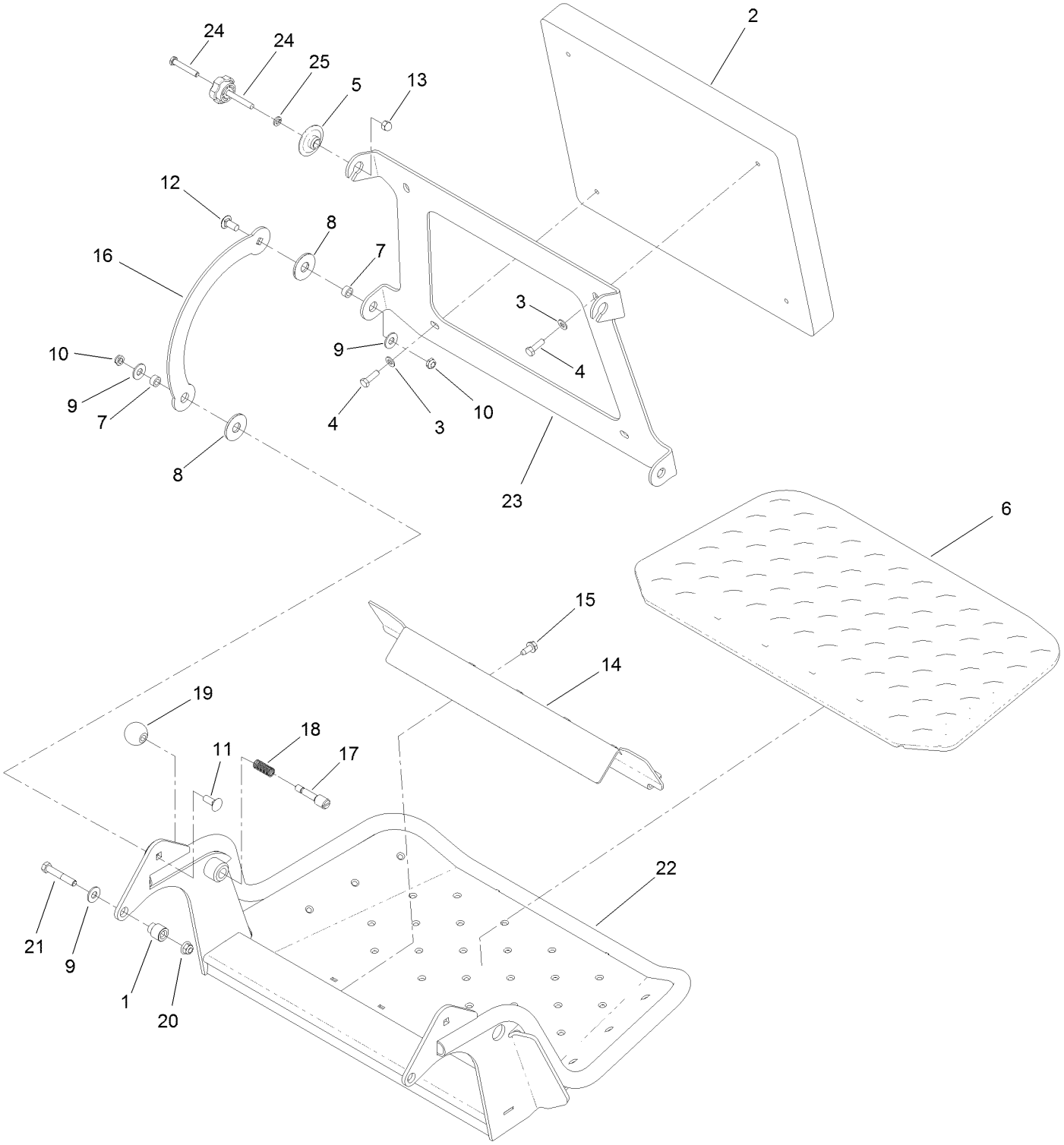

Platform Assembly (continued)

Ref.	Part Number	Qty.	Description
1	132-7583	2	Bushing-Flanged
2	117-9739	1	Pad-Cushion
3	3256-23	4	Washer-Plain
4	121-7999	4	Screw-HH
5	116-2886	2	Slide-Bushing
6	126-7157	1	Mat-Platform
7	111044	4	Spacer
8	114-0463	4	Washer-Friction, Composite
9	3256-4	6	Washer-Flat
10	3296-59	4	Nut-Lock, NI
11	3231-2	2	Bolt-CARR
12	3231-27	2	Screw-CARR
13	137-4808	2	Nut-Acorn
14	136-5669-03	1	Clamp-Shield
15	32144-70	2	Screw-HWHTF
16	114-1915-03	2	Link-Pad
17	119-8650	1	Pin-Latch
18	114-5348	1	Spring
19	1-603175	1	Knob-Ball
20	104-8301	2	Nut-HF, NI
21	323-11	2	Screw-HH
22	120-8475-03	1	Platform
23	120-8499-03	1	Hinge-Pad
24	133-1426	2	Knob
25	3253-4	2	Washer-Lock

Hood Assembly

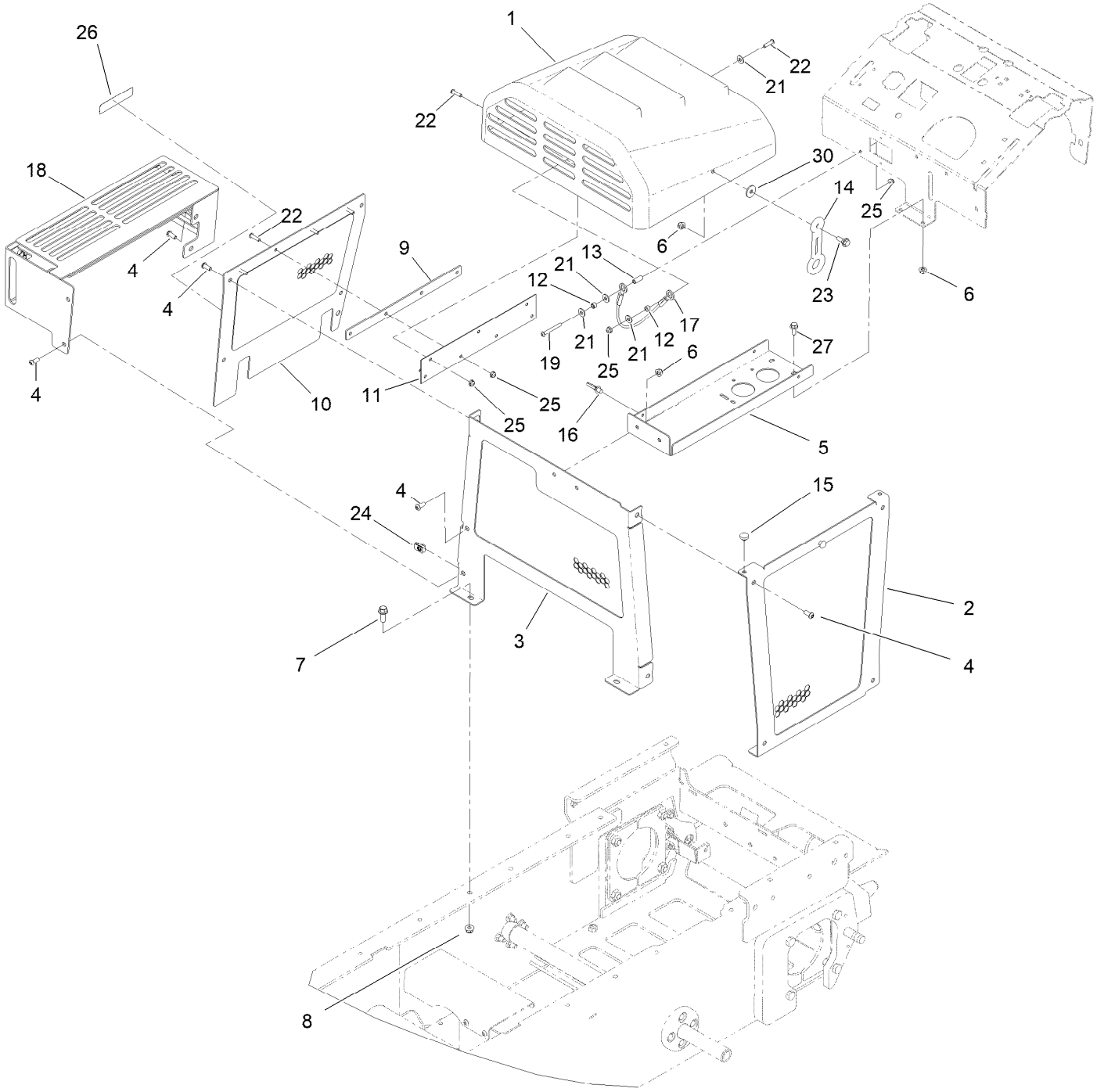

Hood Assembly (continued)

Ref.	Part Number	Qty.	Description
1	132-8990	1	Hood
2	132-8886-01	1	Panel-Side, LH
3	132-8887-01	1	Panel-Front
4	3274-55	14	Screw-HSBH
5	132-8876-03	1	Platform-Battery
6	104-8300	5	Nut-HF, NI
7	3234-42	2	Screw-HHF
8	104-8301	2	Nut-HF, NI
9	132-9050-03	1	Plate-Spacer, Hood
10	132-3905-01	1	Panel-Side, Upper
11	132-9021	1	Hinge-Hood
12	55-9370	2	Spacer-Blade, Rotor
13	87-4710	1	Spacer-Brake, Parking
14	ST47182	1	Latch-Rubber
15	1-513658	2	Bumper
16	32180-118	2	Clip-Tie
17	130-5726	1	Lanyard
18	136-4592-01	1	Guard-Muffler
19	120-2011	1	Screw-HSBH
21	3256-2	4	Washer-Flat
22	3274-65	8	Screw-HSBH
23	116-2670	1	Screw-Shoulder
24	115-7721	6	Nut-Clip, U
25	104-7201	9	Nut-HF, NI
26	133-8062	1	Decal-Arrestor, Spark
27	3234-47	2	Screw-HHF
30	115-7109	1	Washer-Flat

Attachments and Accessories

For 68138 MB TX 2500 Tracked Mud Buggy

Product Name	Model/Part
Light Kit	137-0558
Decal - HERC	145-6934
Toro Red 12oz Aerosol Can	361-10
New Red Paint - Gallon	361-11
Semi-Gloss Black Spray Paint	361-9
Spark Arrestor	98-9099

Notes:

Notes:

Notes:

TORO®

Count on it.