Form No. 3455-445 Rev A

TORO®

Count on it.

Parts Catalog

Groundsmaster® 3300

All-Wheel Drive Traction Unit

Model No. 31902—Serial No. 412400000 and Up

Register at www.Toro.com.
Original Instructions (EN)

CE

3455-445 A

Ordering Replacement Parts

To order replacement parts, please supply the part number, the quantity, and the description of each part desired.

Understanding Reference Numbers

Each identified part in an illustration has a reference number. The reference number for a part also appears in the parts list, along with other information about the part.

This catalog uses two special reference number formats, one to indicate parts in a service assembly and another to indicate the quantity of a given part in an illustration.

Service Assembly Reference Numbers

Parts in service assemblies have reference numbers in the form a:b. The a represents the reference number of the entire service assembly and the b represents a sequential number unique to each part within the service assembly.

For example, a wheel assembly might be identified by reference number 6, the tire by 6:1, the valve by 6:2, and the wheel by 6:3. When you order the assembly identified by reference number 6, you receive all parts identified by reference numbers 6:1,6:2, and 6:3. However, you may also order any part individually. Reference numbers of this type appear in illustration and in parts lists.

Reference Numbers Indicating Quantity

In an illustration, if a reference number indicates more than one part, the reference number has the form nX y. The n represents the quantity of the part, the X is the multiplication symbol, and the y represents the reference number.

For example, in an illustration, the reference number 2X 37 means that two of the parts identified by reference number 37 are indicated.

Contents

Frame and Roll-Over Protection System Assembly . . . 4
LH Lift Arm Assembly No. 138-7419SP . . . 6
RH Lift Arm Assembly No. 138-7429SP . . . 7
Tie Rod Assembly No. 133-6462 . . . 8
Rear Bumper Assembly . . . 9
Front Axle and Parking Brake Assembly . . . 10
Left Hand Brake Assembly No. 120-0235 . . . 12
Right Hand Brake Assembly No. 120-0233 . . . 13
Hydraulic Drive Assembly . . . 14
Hydraulic Motor Assembly No. 138-0304 . . . 15
Hydraulic Motor Assembly No. 138-0303 . . . 16
Hydraulic Motor Assembly No. 137-2458 . . . 17
Hydraulic Motor Assembly No. 137-2478 . . . 18
Steer/Lift Manifold Assembly No. 138-4489 . . . 19
Engine, Radiator Hoses and Shroud Assembly . . . 21
Air Cleaner and Exhaust Assembly . . . 23
Air Cleaner Assembly No. 136-4481 . . . 24
Radiator and Cooler Assembly . . . 25
Fuel and Hydraulic Tank Assembly . . . 26
Fuel Tank Assembly No. 138-0291 . . . 28
Hydraulic Tank Assembly No. 138-4418 . . . 29
Platform, Steering and Console Assembly . . . 30
Steering Column Assembly No. 139-0857 . . . 32
Traction Pedal Assembly . . . 33
Control Console Assembly . . . 34
Hood Assembly . . . 35
Hydraulic PTO Assembly . . . 36
Variable Piston Pump Assembly No. 138-0305 . . . 37
Driveshaft Assembly No. 144-0521SP . . . 39
Hydraulic Assembly . . . 40
Gear Pump Assembly No. 138-0321 . . . 43
Steering Valve Assembly No. 114-8119 . . . 44
Traction Hydraulic Assembly . . . 45
Electrical Assembly . . . 46
Cylinder Block Assembly . . . 48
Gear Housing Assembly . . . 50
Flywheel Housing and Oil Sump Assembly . . . 52
Cylinder Head and Cover Assembly . . . 54
Suction Manifold Assembly . . . 56
Exhaust Manifold Assembly . . . 58
Diesel Particulate Filter Assembly . . . 60
Camshaft and Driving Gear Assembly . . . 62
Crankshaft and Piston Assembly . . . 64
Lubrication and Oil System Assembly . . . 66
Cooling Water System Assembly . . . 68
Fuel Supply Pump Assembly . . . 70
Fuel Injection Valve Assembly . . . 72
Fuel Filter Assembly . . . 74
Starting Motor Assembly . . . 76
Generator Assembly . . . 78
Electronic Control Unit Assembly . . . 80
Electric Parts Assembly . . . 82
Accessory Assembly . . . 84
Gasket Set . . . 86
Attachments and Accessories . . . 88

© 2022—The Toro® Company

8111 Lyndale Avenue South
Bloomington, MN 55420

Contact us at www.Toro.com.
Printed in the USA.

All Rights Reserved

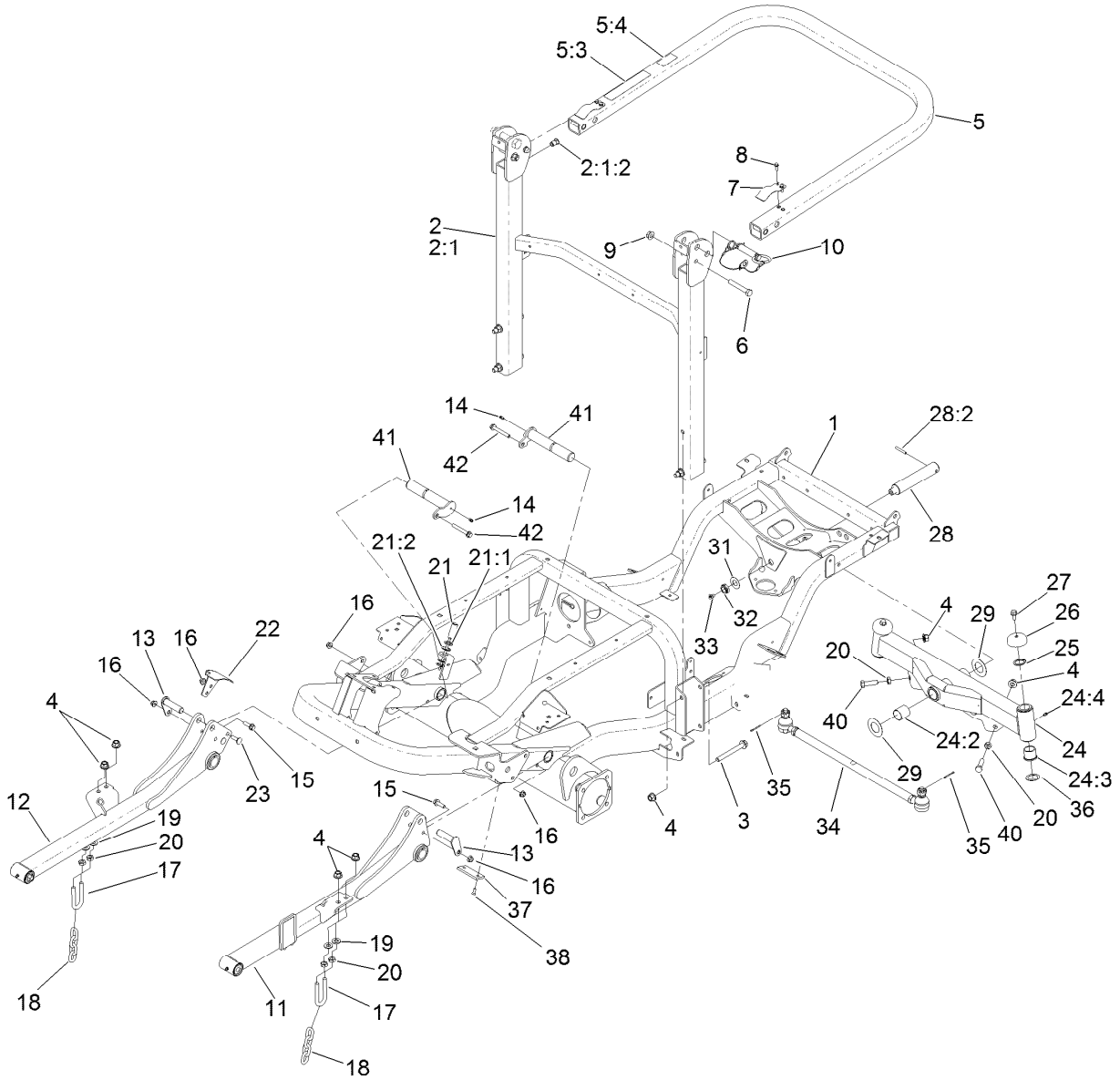

Frame and Roll-Over Protection System Assembly

Ref.	Part Number	Qty.	Description
1	133-6450SP	1	Frame ASM
2	139-6254SP	1	ROPS ASM, Lower
2:1		1	ROPS ASM, Lower ●
2:1:2	138-2760	4	Nut-Clinch, Hex
3	117-3176	4	Screw-HHF
4	99-5107	10	Nut-Lock
5	138-7470	1	ROPS ASM, Upper
5:3	108-2073	1	Decal-Warning
5:4	139-6244	1	Decal-ROPS Compliance
6	325-13	2	Screw-HH
7	110-5696	2	Spring-Leaf
8	32105-15	4	Screw-HWH
9	32128-23	2	Nut-HF
10	103-4553	2	Pin-Fold, ROPS
11	138-7419SP	1	LH Lift Arm ASM
12	138-7429SP	1	RH Lift Arm ASM
13	138-7489	2	Pin (Machined)
14	302-5	2	Fitting-Grease

Ref.	Part Number	Qty.	Description
15	119-4061	2	Screw-HHF
16	104-8301	6	Nut-HF, NI
17	104-0108	2	U-Bolt
18	95-6231	2	Chain-HOC
19	3256-26	4	Washer-Flat
20	3218-5	6	Nut-Jam
21	115-5300	1	Proximity Switch ASM
21:1	117-3207	2	Nut-Hex
21:2	117-3208	2	Washer-Lock, Internal Tooth
22	139-6170-0P	1	Bracket-Sensor Mount [primed]
23	3231-2	2	Bolt-CARR
24	138-4588	1	Axle ASM
24:2	99-6964	2	Bushing-Axle
24:3	104-0015	4	Bushing-Flange
24:4	302-5	2	Fitting-Grease
25	32151-77	2	Ring-Retaining, External
26	69-8890	2	Cap-Spindle

● Not serviced separately

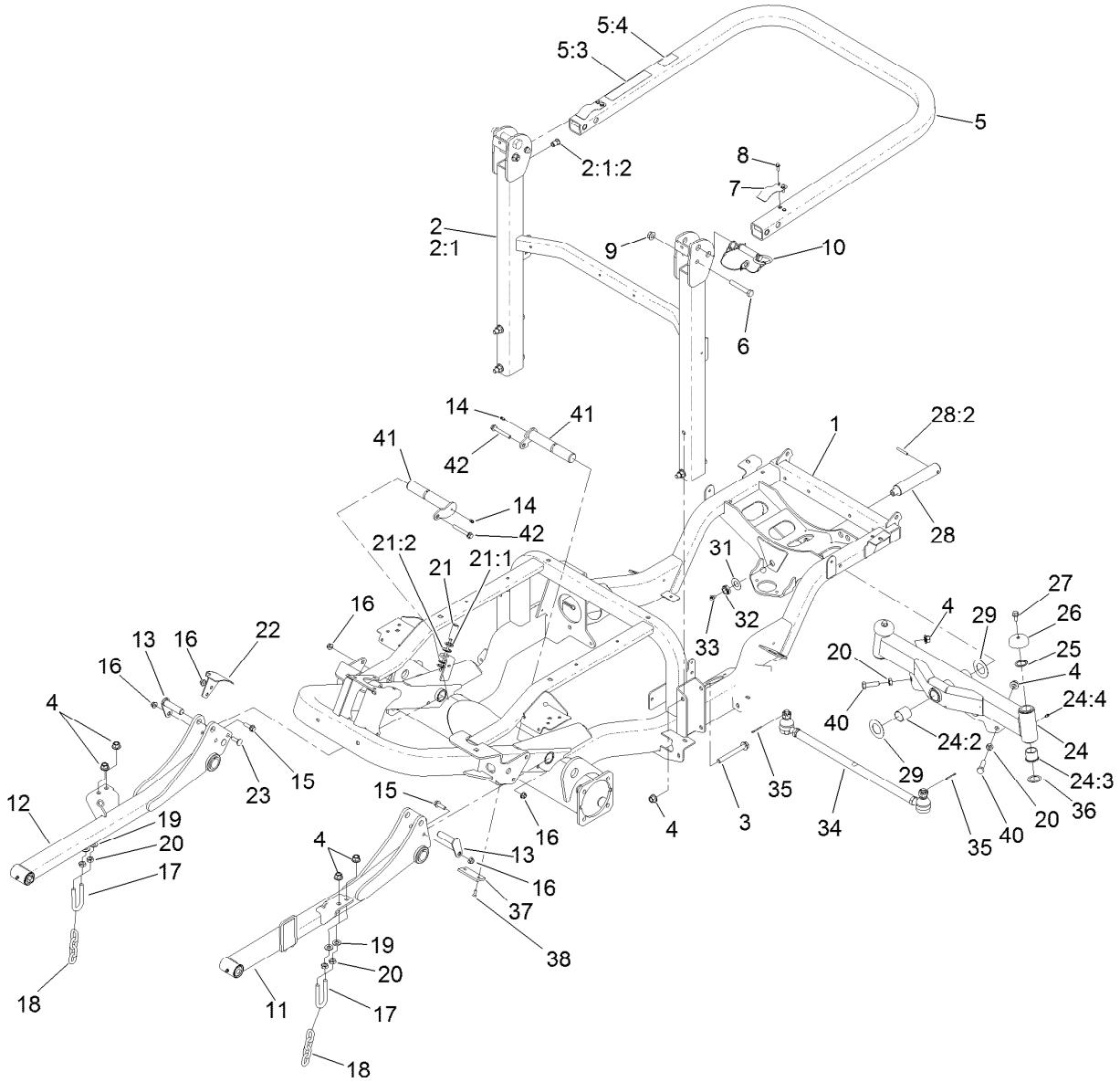

Frame and Roll-Over Protection System Assembly (continued)

Ref.	Part Number	Qty.	Description
27	3234-1	2	Screw-HHF
28	140-6101	1	Pin ASM-Axle Pivot
28:2	32121-32	1	Pin-Roll
29	99-8432	2	Washer-Thrust
31	71-4540	1	Washer-Thrust
32	3296-15	1	Nut-Lock, NI
33	302-33	1	Fitting-Grease
34	133-6462	1	Tie Rod ASM

Ref.	Part Number	Qty.	Description
35	3272-12	2	Pin-Cotter
36	76-2980	2	Washer-Thrust
37	138-4452	2	Pad-Stop, Deck
38	3289-4	4	Screw-FH
40	325-7	2	Screw-HH
41	138-4593	2	Pin
42	133-9682	2	Screw-Hfh

● Not serviced separately

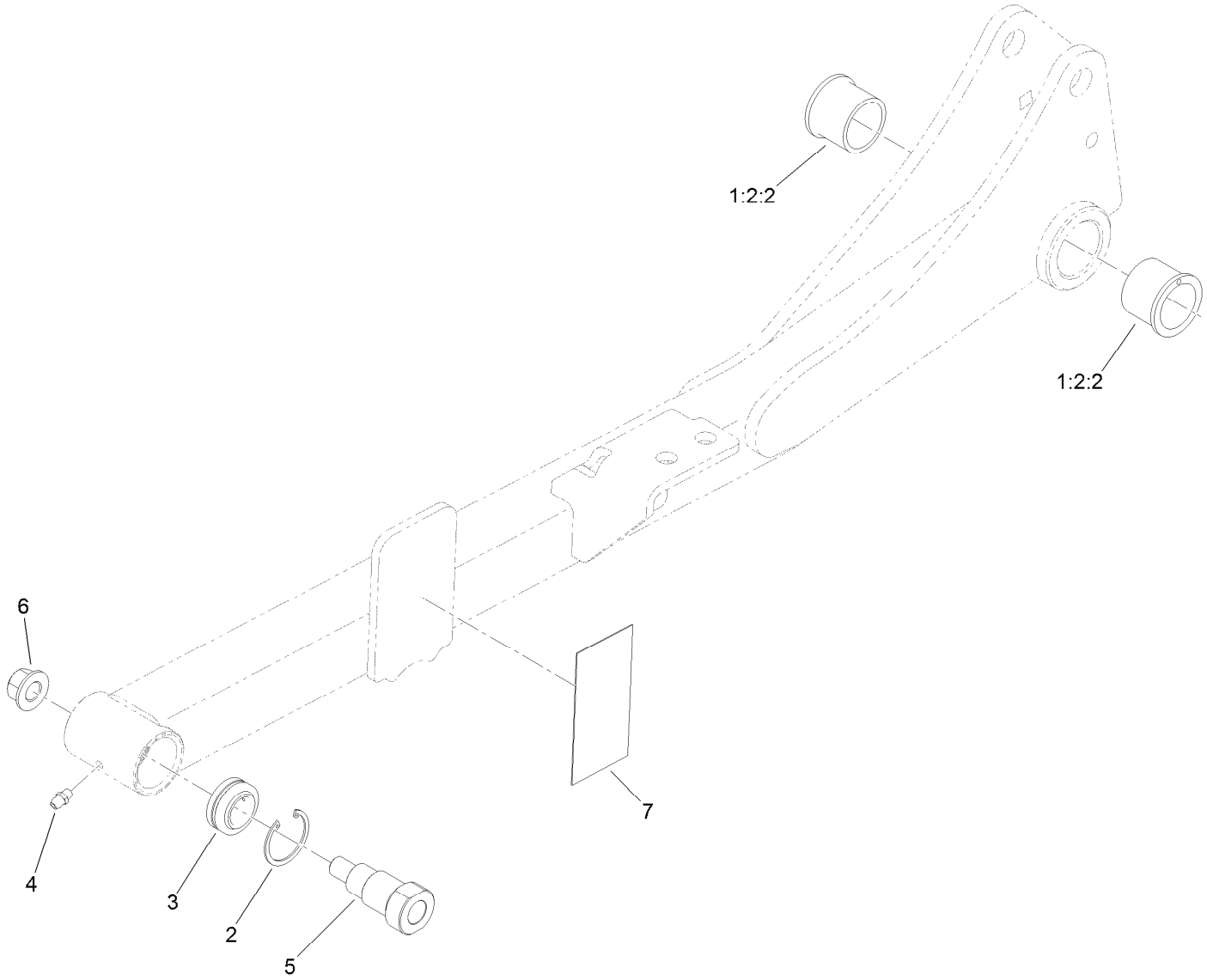

LH Lift Arm Assembly No. 138-7419SP

Ref.	*Part Number*	*Qty.*	*Description*
1:2:2	104-0015	2	Bushing-Flange
2	32151-34	1	Ring-Retaining
3	105-7441	1	Bearing-Spherical
4	302-5	1	Fitting-Grease
5	139-0910	1	Bolt-Shoulder
6	99-5107	1	Nut-Lock
7	139-0948	1	Pad-Ride, Pin

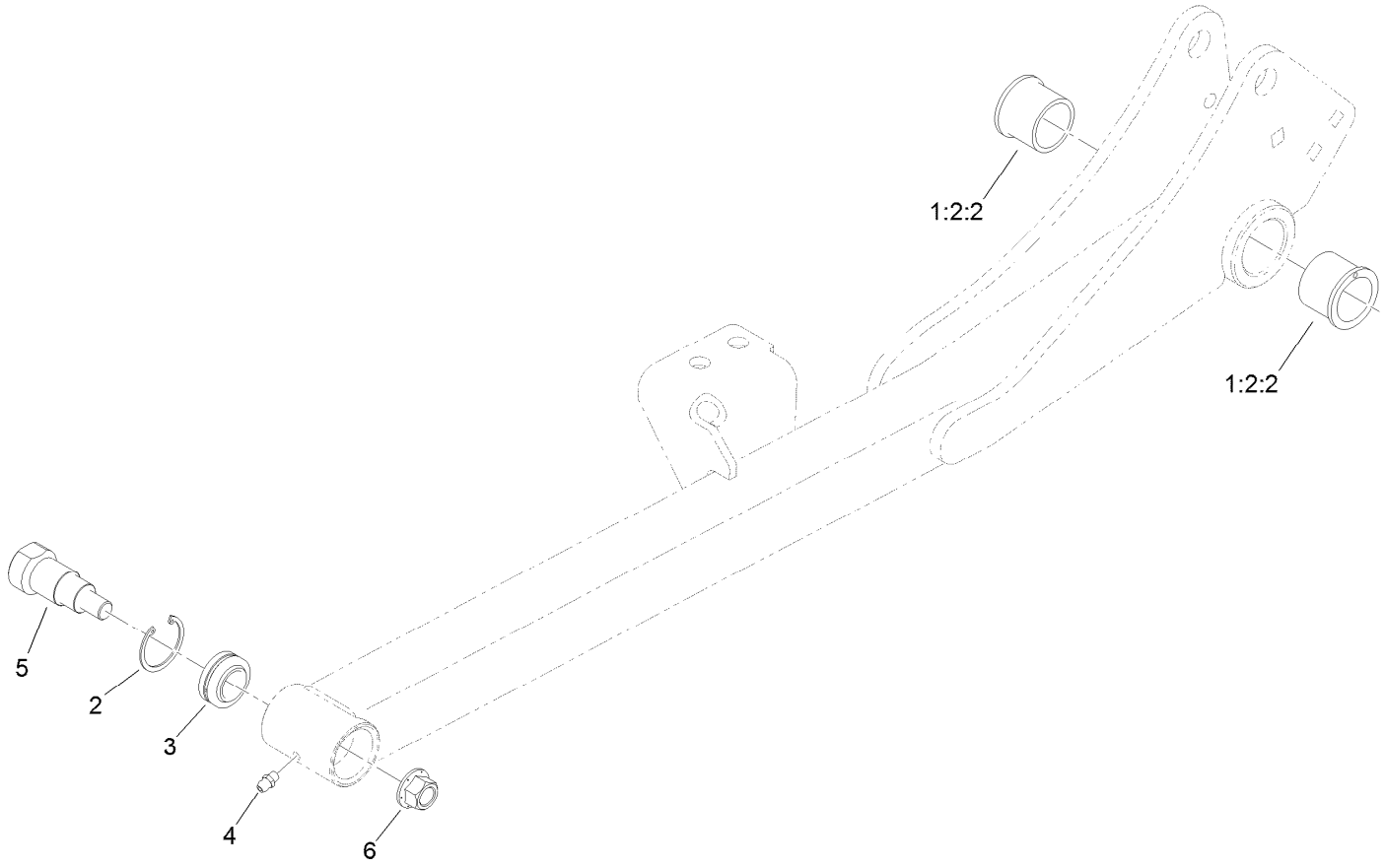

RH Lift Arm Assembly No. 138-7429SP

Ref.	*Part Number*	*Qty.*	*Description*
1:2:2	104-0015	2	Bushing-Flange
2	32151-34	1	Ring-Retaining
3	105-7441	1	Bearing-Spherical
4	302-5	1	Fitting-Grease
5	139-0910	1	Bolt-Shoulder
6	99-5107	1	Nut-Lock

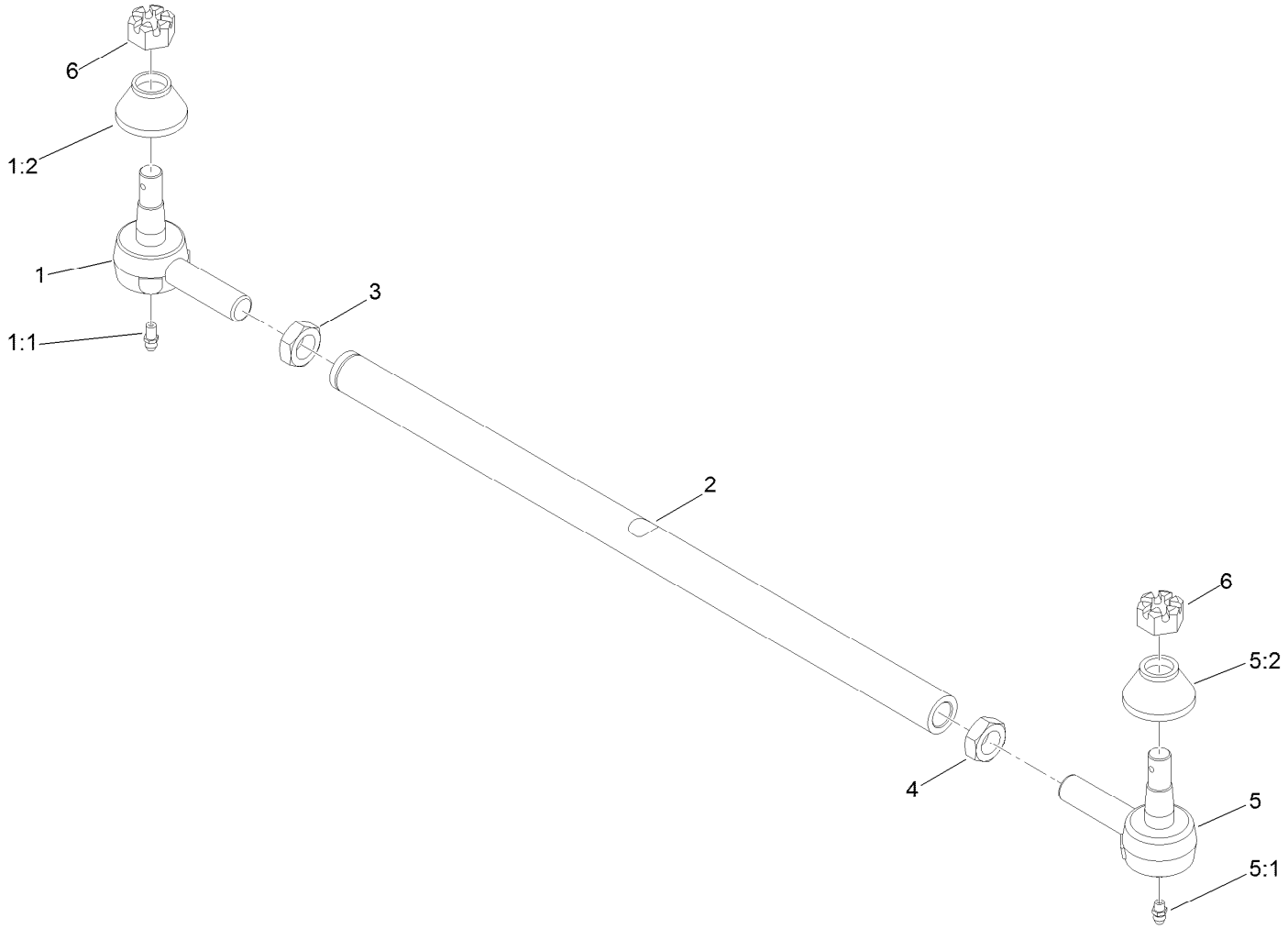

Tie Rod Assembly No. 133-6462

Ref.	*Part Number*	*Qty.*	*Description*
1	139-6199	1	Tie Rod End
1:1	302-5	1	Fitting-Grease
1:2	105-7835	1	Seal
2	133-6463	1	Tie-Rod
3	84-5300	1	Nut-Jam
4	110-5337	1	Nut-Jam
5	139-6200	1	Tie Rod End
5:1	302-5	1	Fitting-Grease
5:2	105-7835	1	Seal
6	140-6135	2	Nut-Hex, Slotted

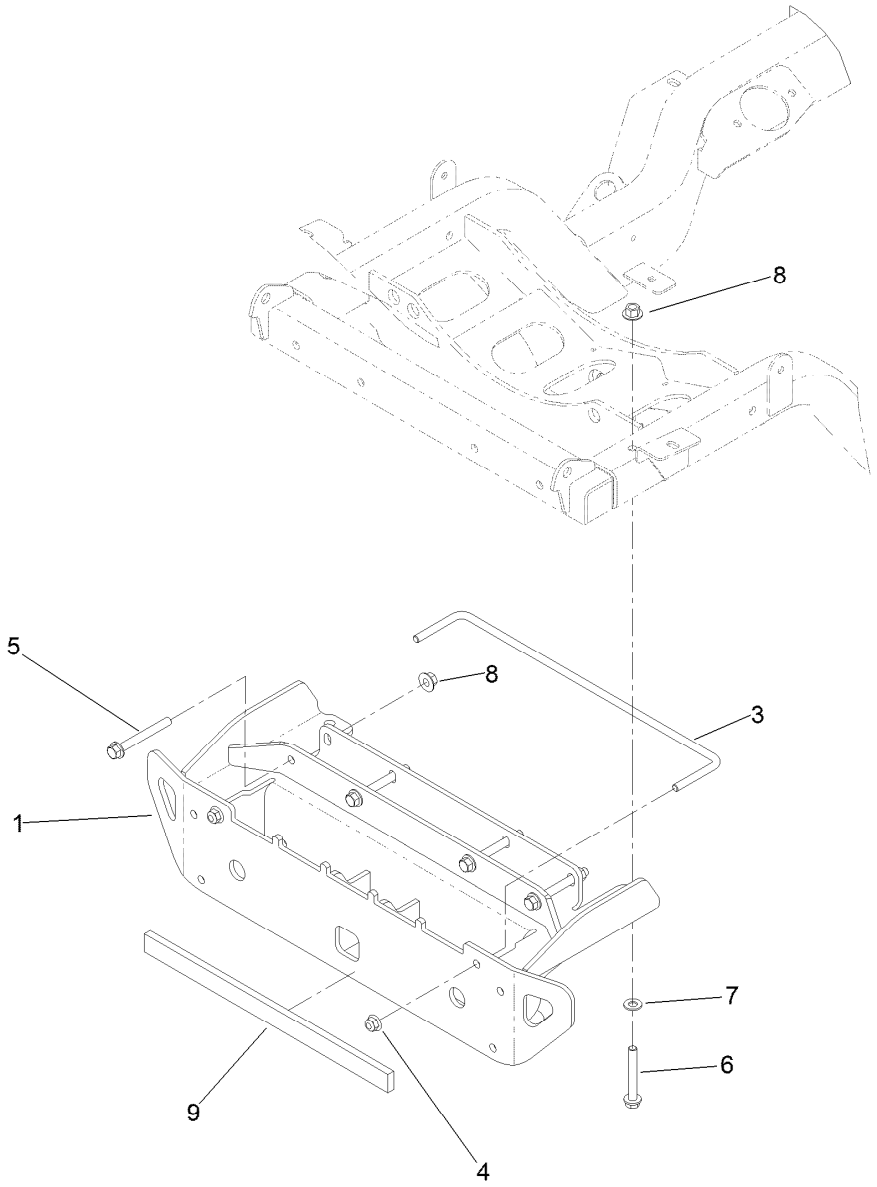

Rear Bumper Assembly

Ref.	*Part Number*	*Qty.*	*Description*
1	145-5981SP	1	Bumper-Rear Wa
3	125-2667	1	Lock-Weight
4	104-8301	2	Nut-HF, NI
5	3234-41	4	Screw-HHF
6	139-2429	2	Screw-HHF
7	3256-24	2	Washer-Flat
8	32128-43	6	Nut-Flange
9	144-0553	1	Strip-Rubber

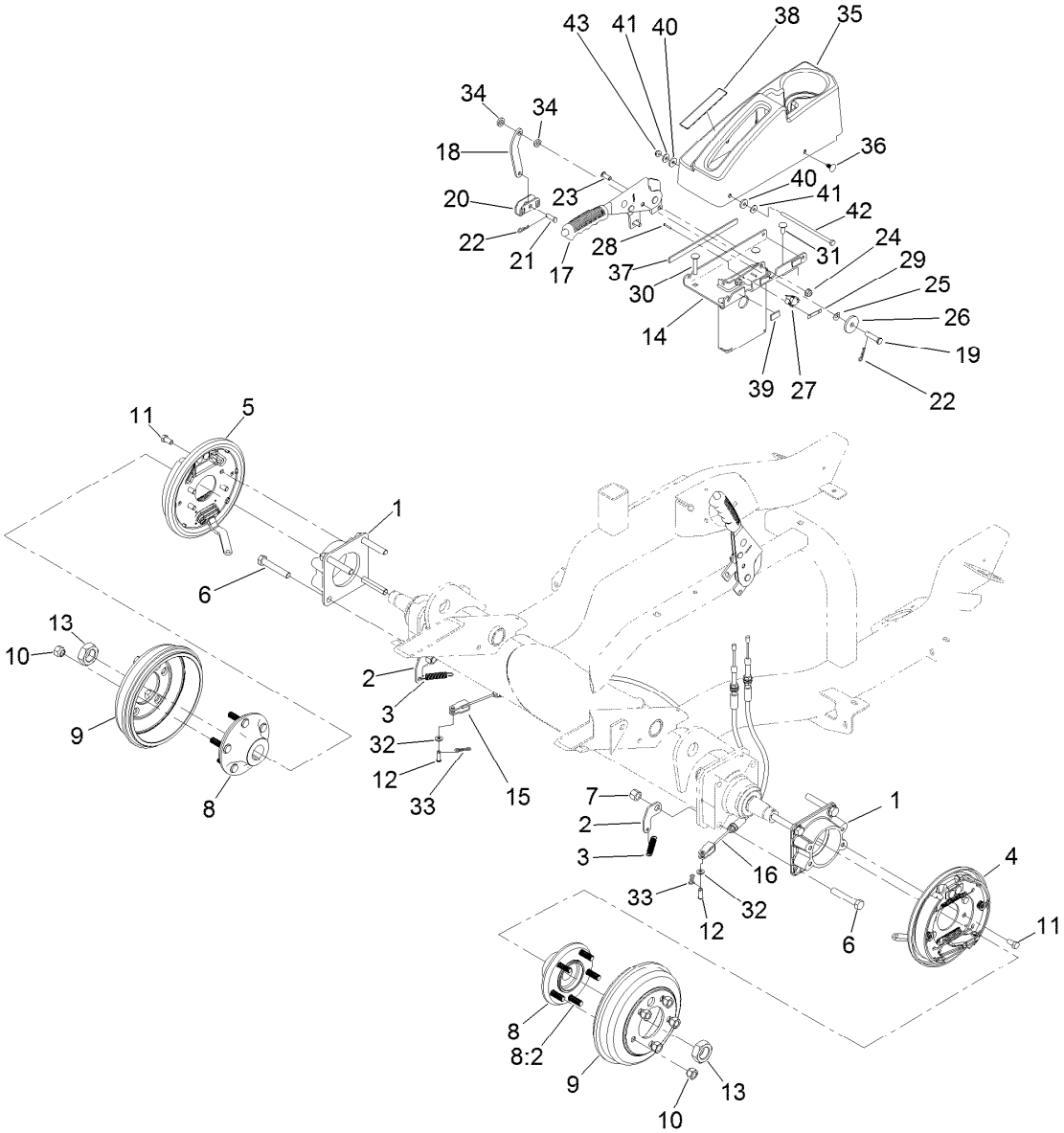

Front Axle and Parking Brake Assembly

Ref.	Part Number	Qty.	Description
1	120-6253-03	2	Adapter-Brake
2	138-4499	2	Clip-Spring
3	137-2591	2	Spring-Extension
4	120-0235	1	LH Brake ASM
5	120-0233	1	RH Brake ASM
6	325-12	8	Screw-HH
7	3296-23	8	Nut-Lock, NI
8	137-2470	2	Hub ASM
8:2	114-3918	5	Stud-Wheel
9	114-8864	2	Drum-Brake
10	242-50	10	Nut-Lug
11	323-4	8	Screw-HH
12	283-58	2	Pin-Clevis
13	107-9319	2	Nut-Hex
14	144-0517-0P	1	Parking Brake Mount [primed]
15	137-2640	1	Cable-Brake, Adjustable RH
16	137-2641	1	Cable-Brake, Adjustable LH
17	131-8320	1	Lever-Brake, Park
18	144-0516	1	Link-Park, Brake
19	283-10	1	Pin-Clevis

Ref.	Part Number	Qty.	Description
20	87-3480	1	Bracket-Equalizer, Cable
21	1-808280	1	Pin-Clevis
22	1-806003	2	Pin-Cotter
23	3274-55	2	Screw-HSBH
24	104-8300	6	Nut-HF, NI
25	121-4605	1	Washer-Spring
26	131-8496	1	Washer-Plain
27	108-6496	1	Switch (W/Boot)
28	95-3003	2	Screw-PPHTF
29	3290-354	1	Nut-Speed
30	116-0629	2	Screw-CARR
31	3230-23	2	Bolt-CARR
32	3256-74	2	Washer-Flat
33	119-1415	2	Pin-Cotter, Locking
34	3-3287	2	Spacer
35	138-7475	1	Cover-Brake, Parking
36	117-2382	2	Plug-Plastic
37	132-7282	1	Strip-Foam
38	139-6224	1	Decal-Brake, Parking
39	115-5417	3	Strip-Foam
40	144-0499	2	Washer-Epdm

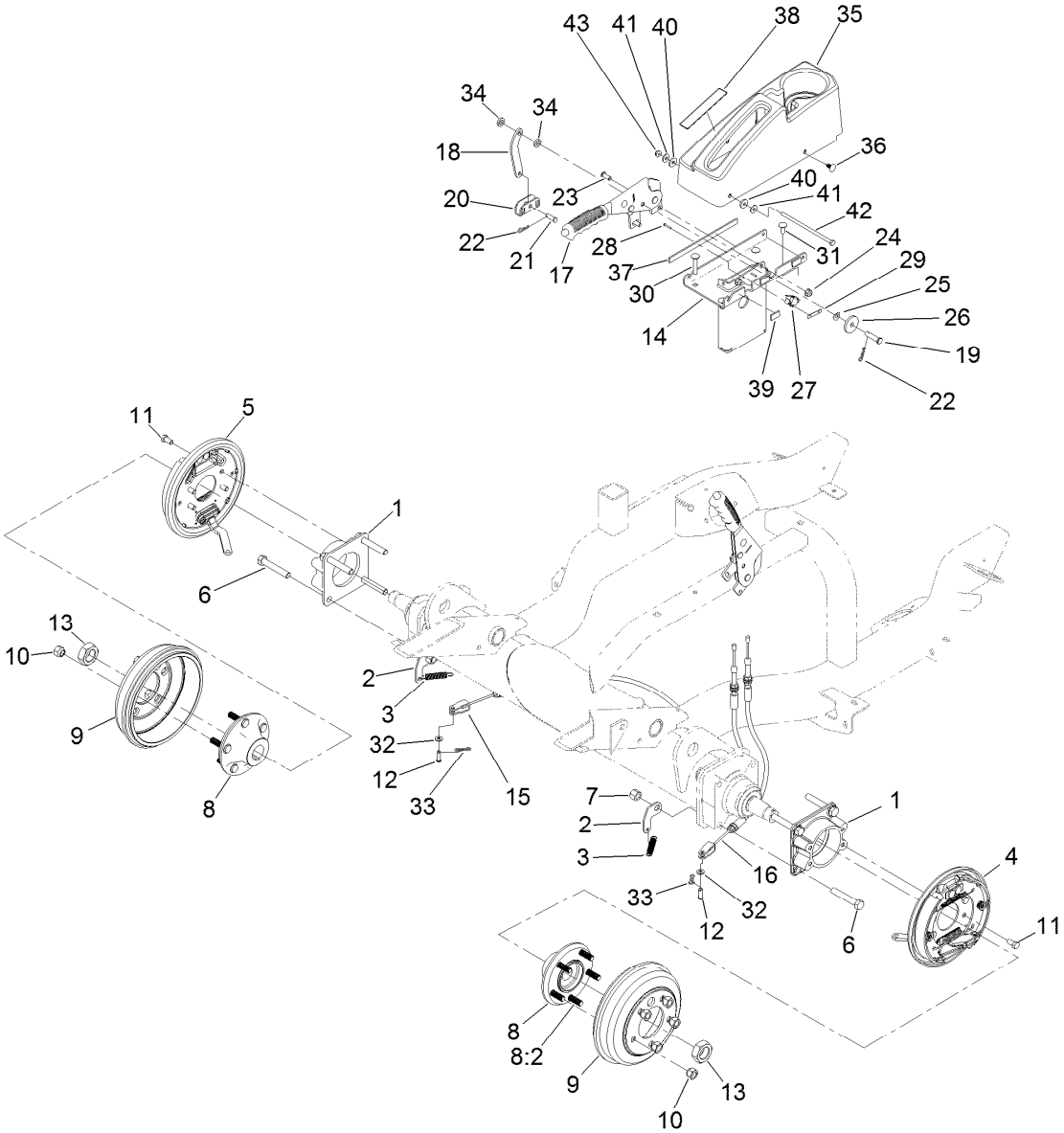

Front Axle and Parking Brake Assembly (continued)

Ref.	Part Number	Qty.	Description
41	3256-78	2	Washer-Flat
42	321-21	1	Screw-HH
43	104-7201	1	Nut-HF, NI

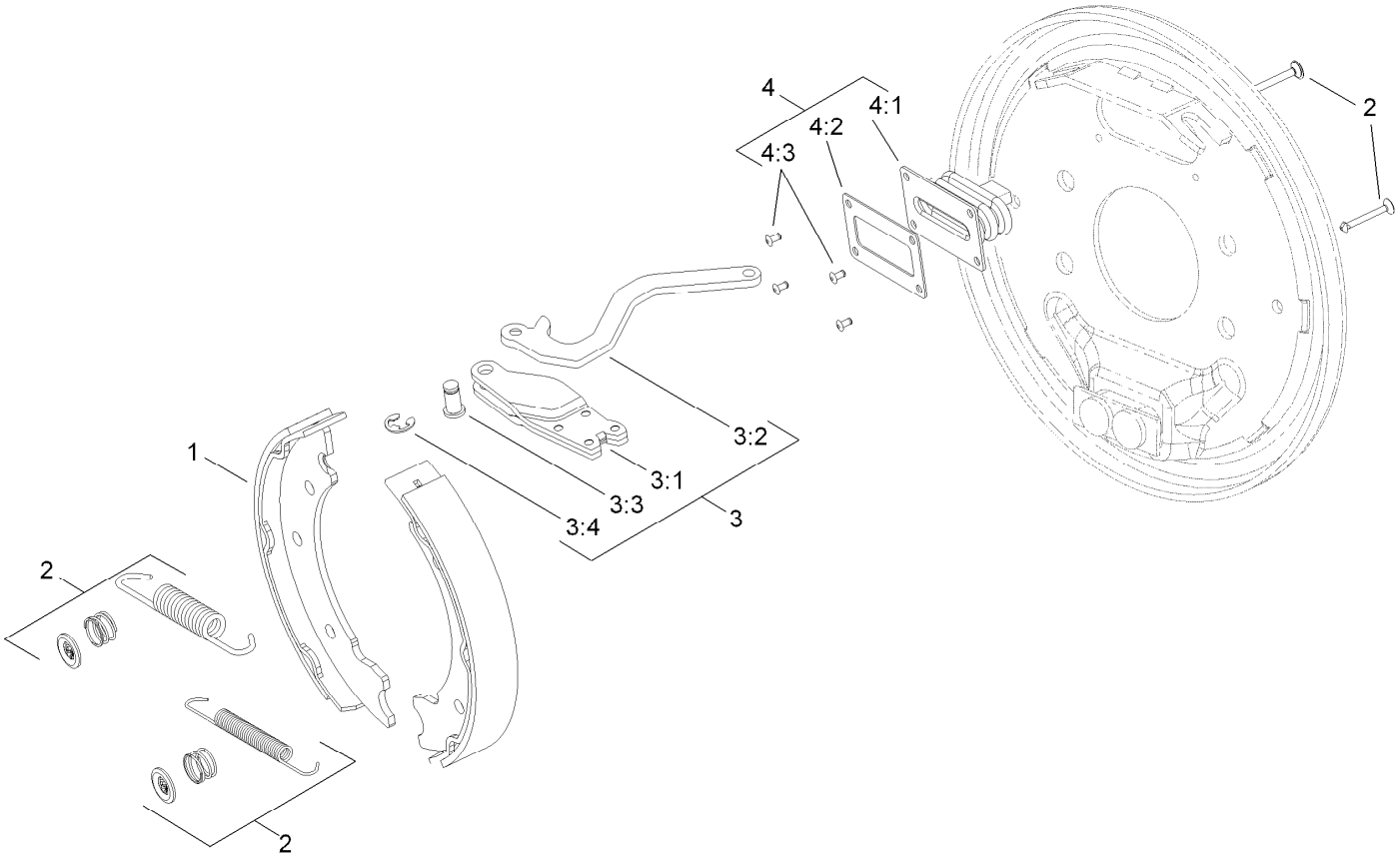

Left Hand Brake Assembly No. 120-0235

Ref.	*Part Number*	*Qty.*	*Description*
1	139-5950	1	Brake Shoe Kit
2	108-6983	1	Brake Hardware Kit
3	120-0236	1	LH Actuator Kit
3:1		1	Housing ●
3:2		1	Lever-LH ●
3:3		1	Pin-Pivot ●
3:4		1	E-Ring ●
4	110-8885	1	Dust Boot Kit
4:1		1	Boot ●
4:2		1	Plate-Back Up ●
4:3		2	Rivet ●

● Not serviced separately

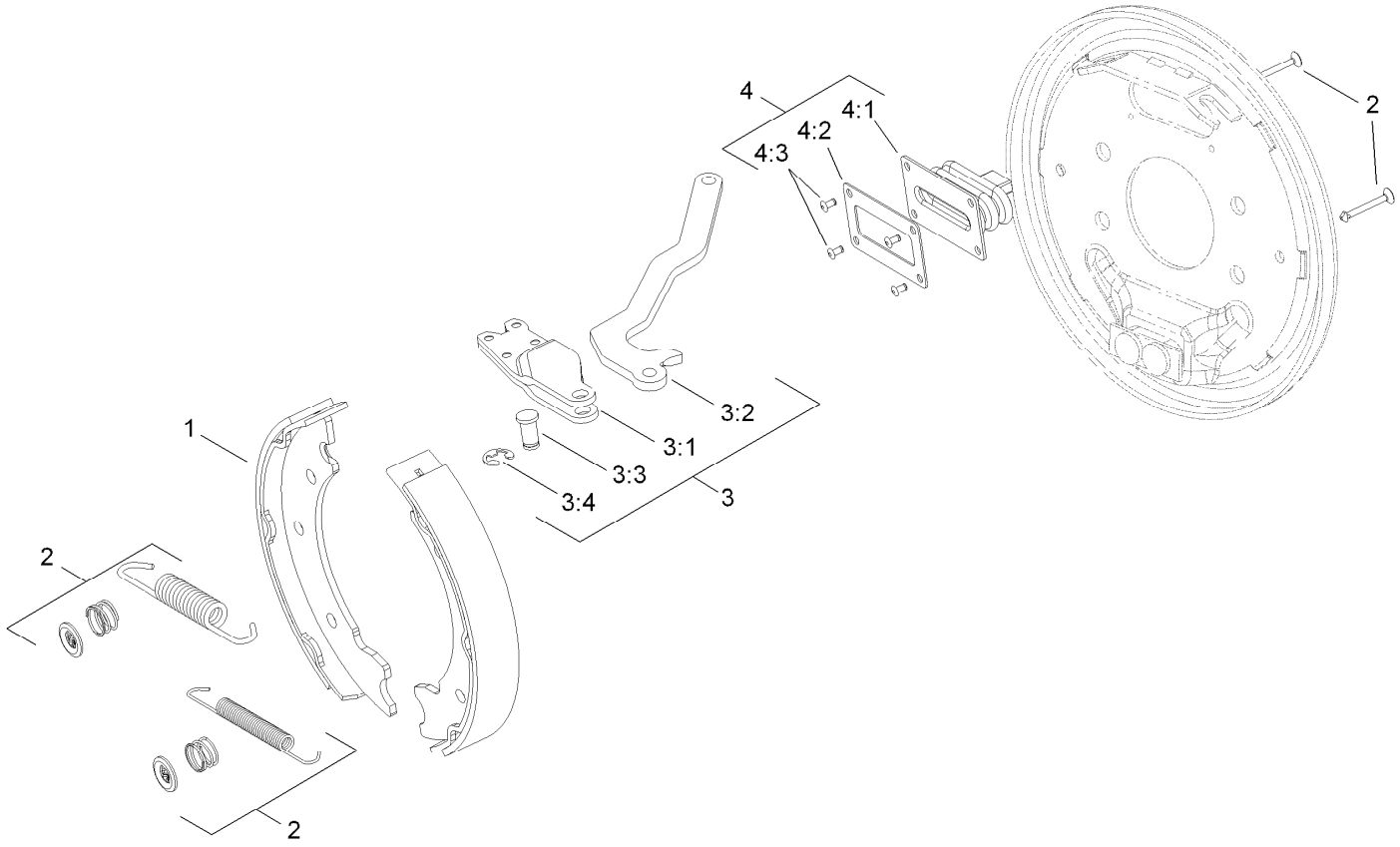

Right Hand Brake Assembly No. 120-0233

Ref.	*Part Number*	*Qty.*	*Description*
1	139-5950	1	Brake Shoe Kit
2	108-6983	1	Brake Hardware Kit
3	120-0234	1	RH Actuator Kit
3:1		1	Housing ●
3:2		1	Lever-RH ●
3:3		1	Pin-Pivot ●
3:4		1	E-Ring ●
4	110-8885	1	Dust Boot Kit
4:1		1	Boot ●
4:2		1	Plate-Back Up ●
4:3		2	Rivet ●

● Not serviced separately

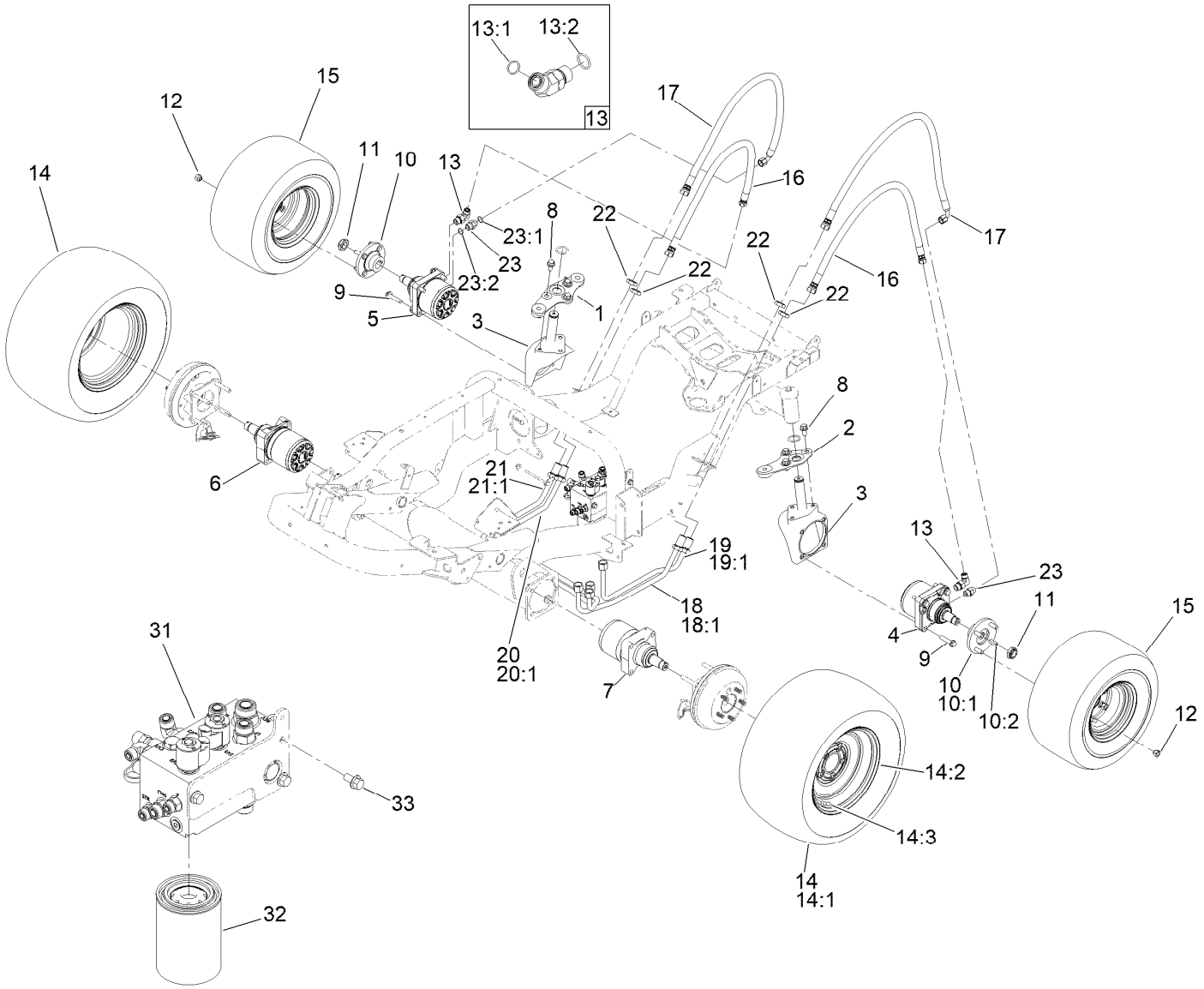

Hydraulic Drive Assembly

Ref.	Part Number	Qty.	Description
1	140-3142	1	Link-Drag, RH
2	140-3144	1	Link-Drag, LH
3	107-4517-03	2	Housing-Motor
4	138-0303	1	Motor-Hydraulic, CCW
5	138-0304	1	Motor-Hydraulic, CW
6	137-2478	1	Motor-Hydraulic, CW
7	137-2458	1	Motor-Hydraulic, CCW
8	3234-38	6	Screw-HHF
9	3234-46	8	Screw-HHF
10	18-3209	2	Wheel Hub/Stud ASM
10:1	10-6870-03	1	Hub-Wheel
10:2	10-6830	4	Stud-Type, Drive
11	116-1399	2	Locknut
12	242-50	8	Nut-Lug
13	340-105	2	Fitting-Elbow, 90 DEG
13:1	237-80	1	O-Ring
13:2	237-30	1	O-Ring
14	137-2590	2	Wheel ASM
14:1	137-2594	1	Tire
14:2	137-2595	1	Rim

Ref.	Part Number	Qty.	Description
14:3	232-27	1	Stem-Valve
15	137-2592	2	Wheel ASM
16	144-3929	2	Hose ASM, Hydraulic
17	144-3928	2	Hose ASM, Hydraulic
18	138-0334	1	Hydraulic Tube ASM
18:1	237-65	1	O-Ring
19	138-0335	1	Hydraulic Tube ASM
19:1	237-65	1	O-Ring
20	138-0337	1	Hydraulic Tube ASM
20:1	237-65	1	O-Ring
21	138-0338	1	Hydraulic Tube ASM
21:1	237-65	1	O-Ring
22	340-74	4	Nut-Lock, Bulkhead
23	340-6	2	Fitting-Straight
23:1	237-30	1	O-Ring
23:2	237-80	1	O-Ring
31	138-4489	1	Manifold-Steering/Lift
32	86-3010	1	Filter-Oil
33	3234-1	3	Screw-HHF

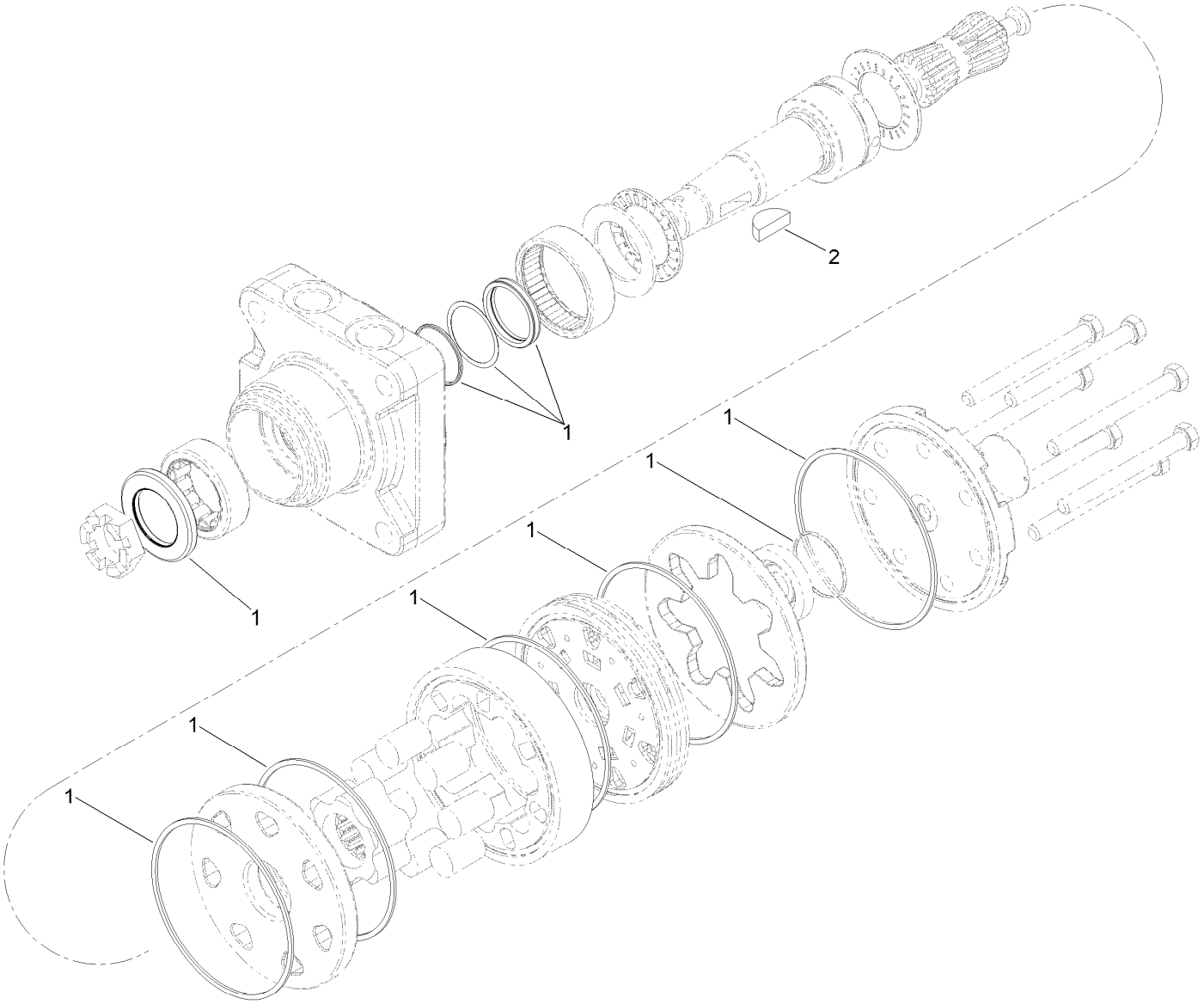

Hydraulic Motor Assembly No. 138-0304

Ref.	*Part Number*	*Qty.*	*Description*
1	110-8897	1	Seal Kit
2	3257-42	1	Key-Woodruff

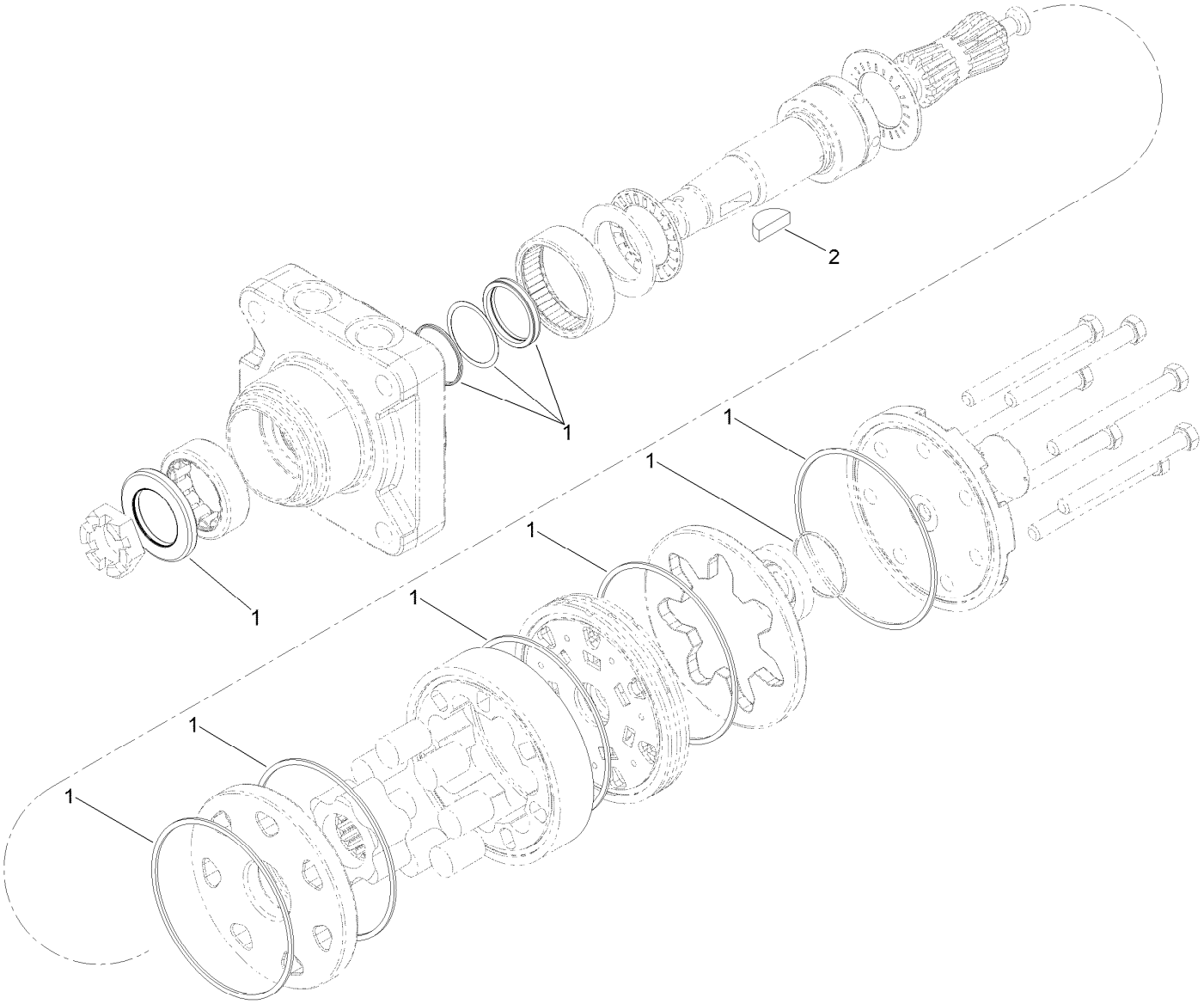

Hydraulic Motor Assembly No. 138-0303

Ref.	*Part Number*	*Qty.*	*Description*
1	110-8897	1	Seal Kit
2	3257-42	1	Key-Woodruff

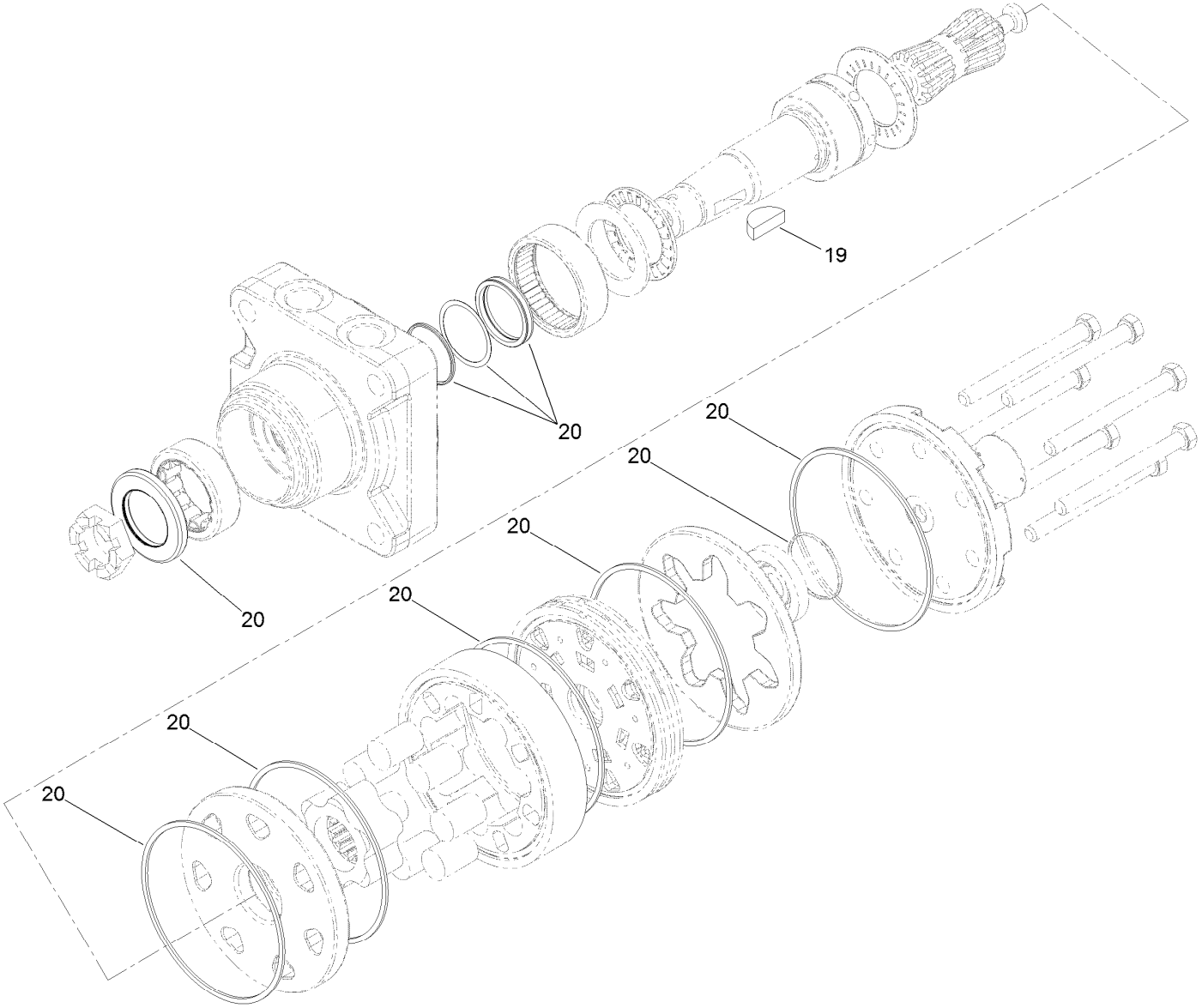

Hydraulic Motor Assembly No. 137-2458

Ref.	*Part Number*	*Qty.*	*Description*
19	3257-42	1	Key-Woodruff
20	110-8896	1	Seal Kit

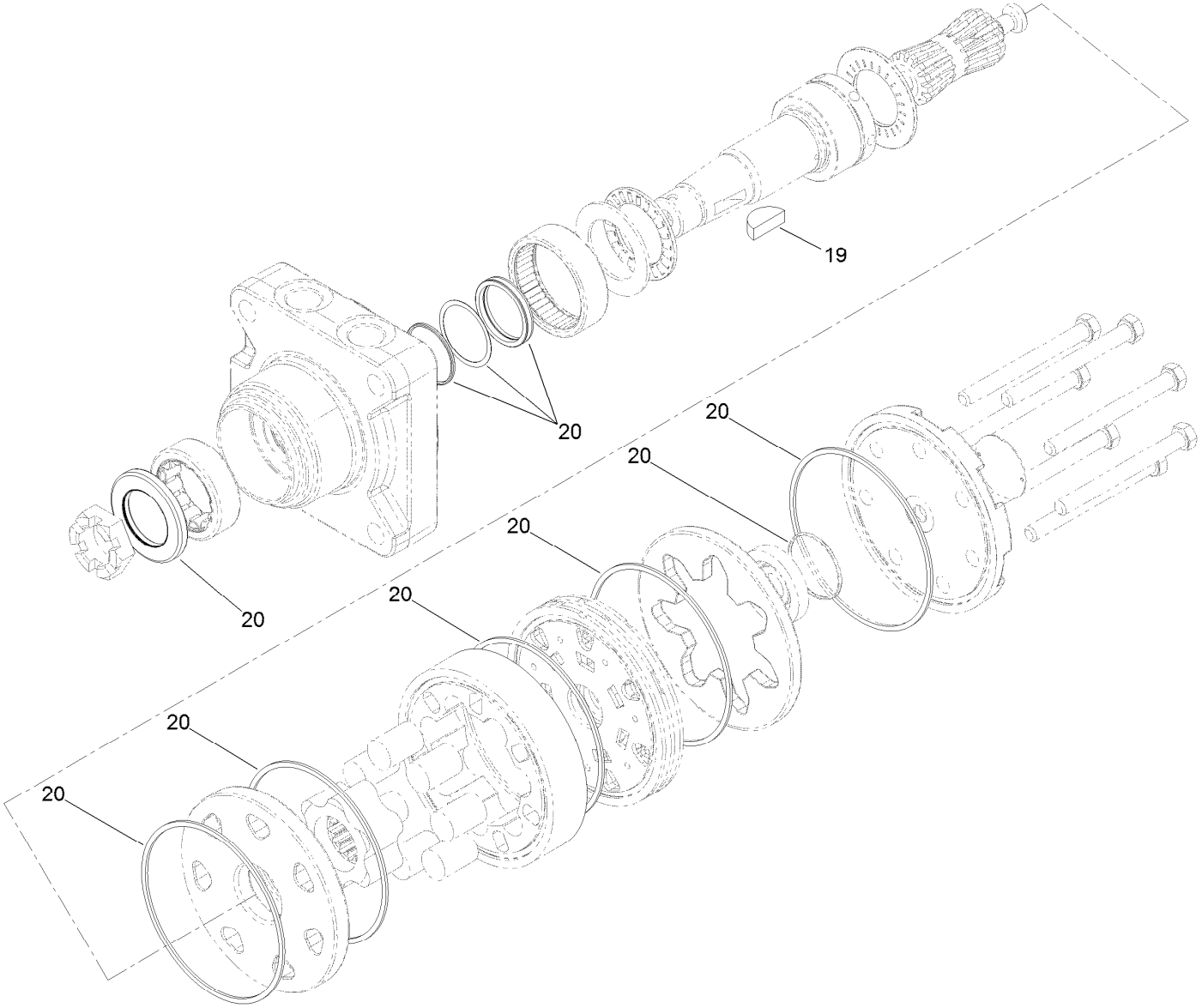

Hydraulic Motor Assembly No. 137-2478

Ref.	*Part Number*	*Qty.*	*Description*
19	3257-42	1	Key-Woodruff
20	110-8896	1	Seal Kit

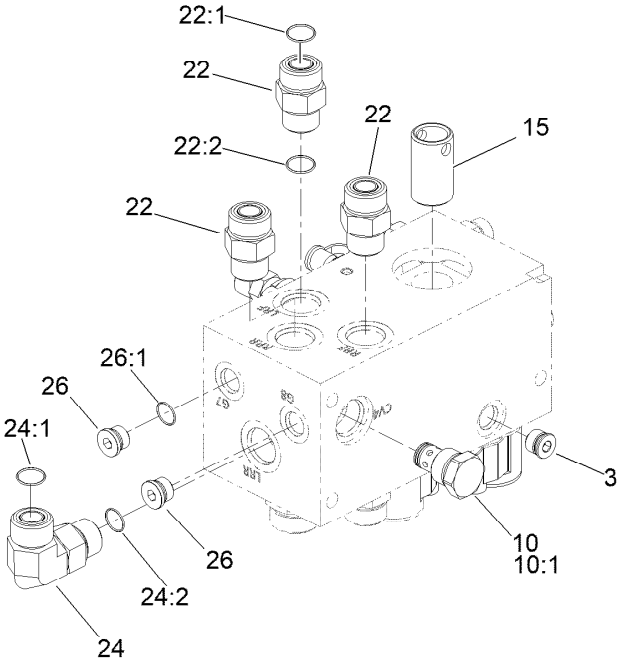

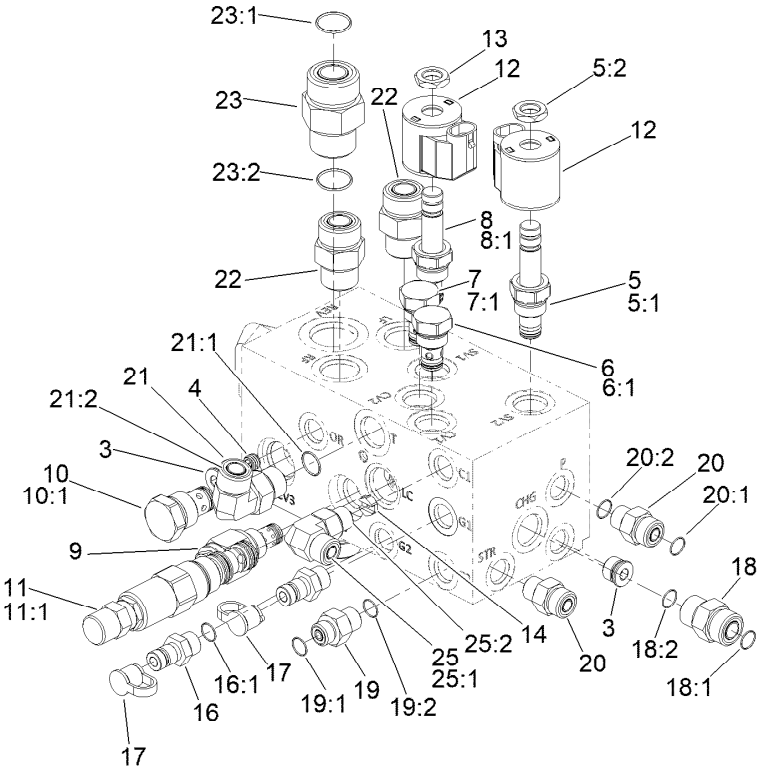

Steer/Lift Manifold Assembly No. 138-4489

Ref.	Part Number	Qty.	Description
3	112-9213	3	Plug
4	110-8883	1	Plug-Orifice (0.040)
5	112-9206	1	Solenoid Valve ASM
5:1	105-9156	1	Seal Kit
5:2	110-2634	1	Nut-Coil
6	114-2873	1	Check Valve ASM
6:1	105-9156	1	Seal Kit
7	139-1213	1	Valve-Check
7:1	105-9156	1	Seal Kit
8	120-6562	1	Valve-Solenoid
8:1	105-9156	1	Seal Kit
9	139-6298	1	Valve-Relief (Bi-Directional)
10	110-8881	2	Valve-Check
10:1	105-9159	1	Seal Kit ●
11	144-0501	1	Valve-Logic, 220 PSI (Adjustable)
11:1	119-2159	1	Seal Kit
12	110-0497	2	Coil-Solenoid

Ref.	Part Number	Qty.	Description
13	110-2634	2	Nut-Coil
14	139-6296	1	Orifice-Check 0.100 DIA
15	139-6297	1	Nipple-Filter
16	59-7410	2	Fitting-Diagnostic
16:1	237-42	1	O-Ring
17	354-79	2	Cap-Dust
18	340-4	1	Fitting-Straight
18:1	237-30	1	O-Ring
18:2	237-79	1	O-Ring
19	340-1	1	Fitting-Straight
19:1	237-21	1	O-Ring
19:2	237-42	1	O-Ring
20	340-2	2	Fitting-Straight
20:1	237-22	1	O-Ring
20:2	237-42	1	O-Ring
21	340-98	1	Fitting-Elbow, 90 DEG
21:1	237-79	1	O-Ring
21:2	237-30	1	O-Ring

● Not illustrated

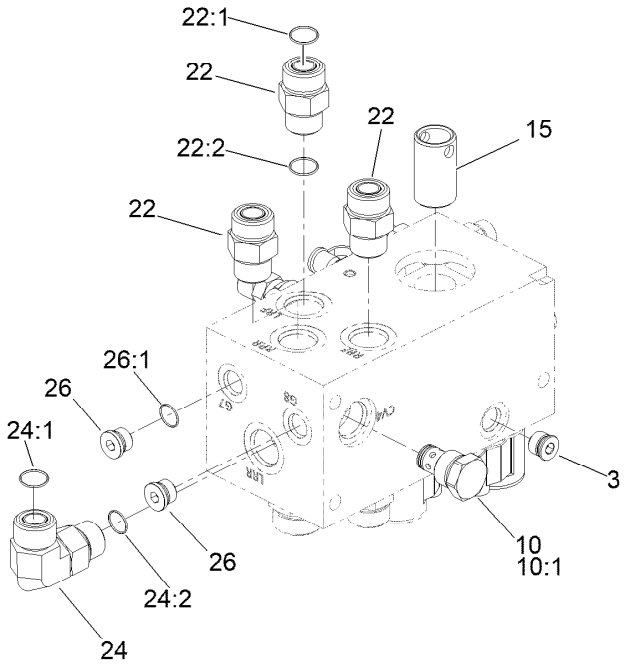

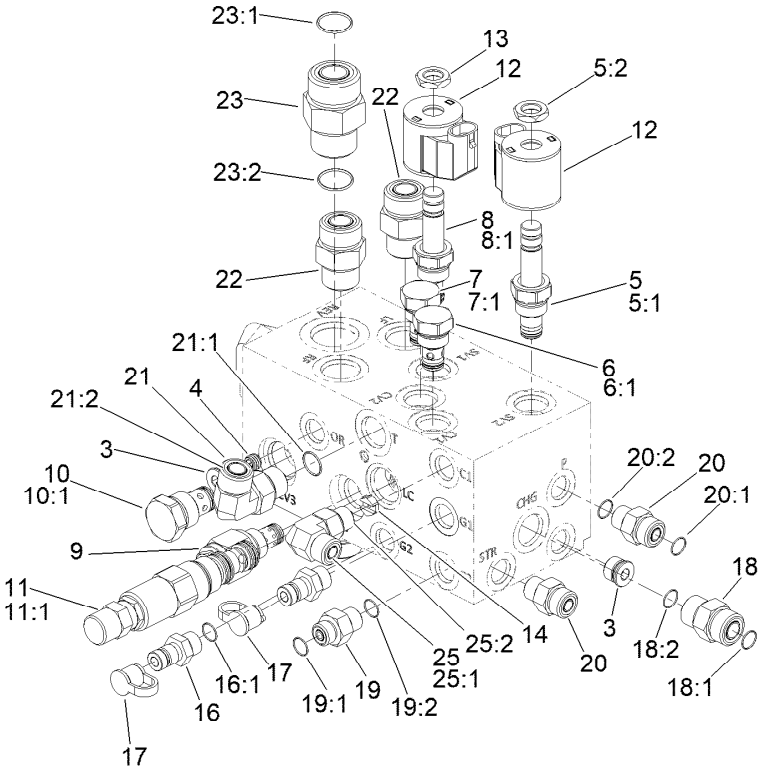

Steer/Lift Manifold Assembly No. 138-4489 (continued)

Ref.	Part Number	Qty.	Description
22	340-7	5	Fitting-Straight
22:1	237-65	1	O-Ring
22:2	237-80	1	O-Ring
23	340-9	1	Fitting-STR
23:1	237-58	1	O-Ring
23:2	237-81	1	O-Ring
24	340-17	1	Fitting-Elbow, 90 DEG

Ref.	Part Number	Qty.	Description
24:1	237-65	1	O-Ring
24:2	237-80	1	O-Ring
25	340-77	1	Fitting-Elbow, 90 DEG
25:1	237-22	1	O-Ring
25:2	237-42	1	O-Ring
26	353-989	2	Plug-Hex, Hollow
26:1	237-42	1	O-Ring

● Not illustrated

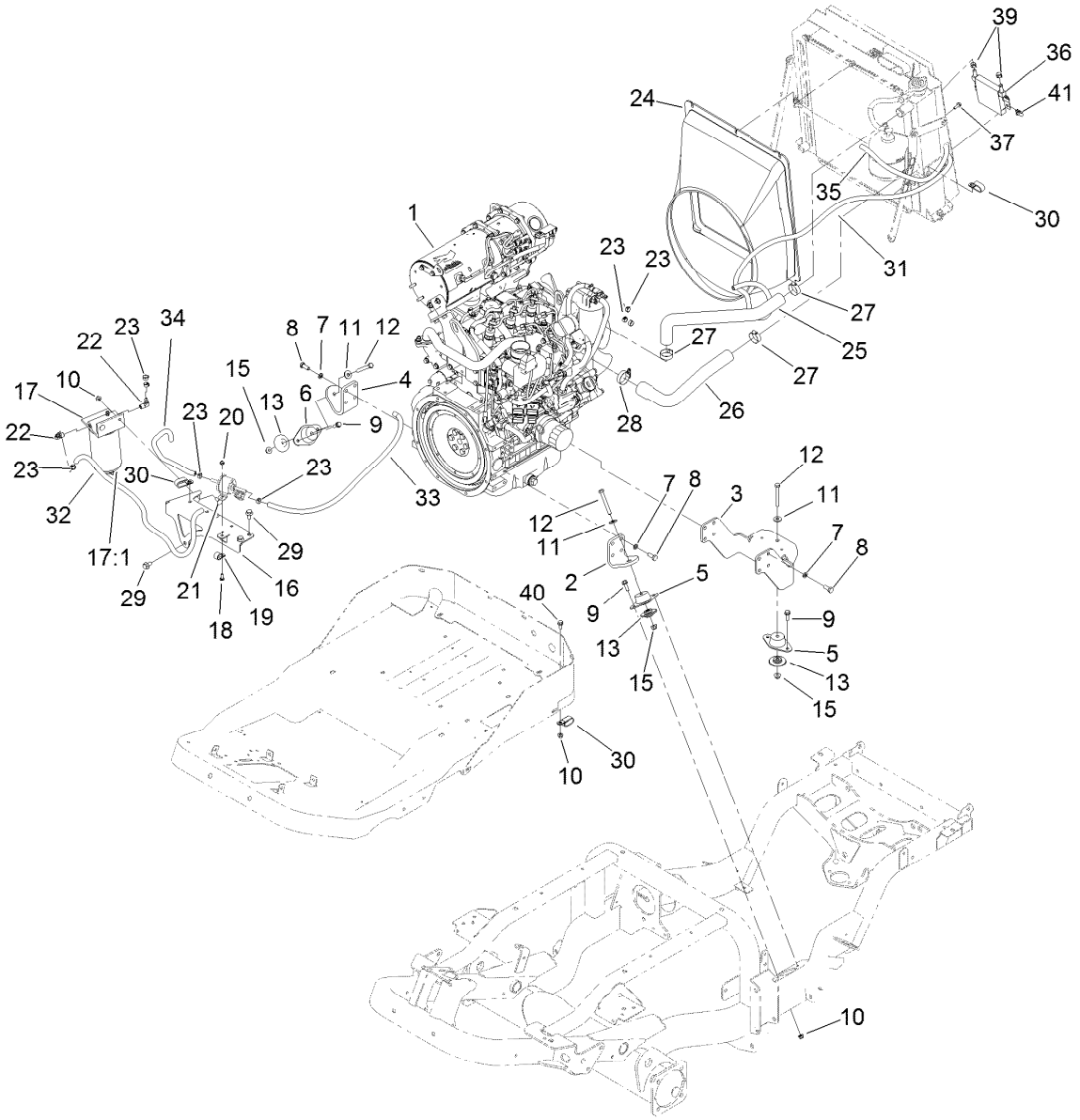

Engine, Radiator Hoses and Shroud Assembly

Ref.	Part Number	Qty.	Description
1	139-6183	1	Engine-Yanmar 3Tnv88C-Dtr6
2	138-0409-0P	1	Mount-Engine, LH Front
3	138-0410-0P	1	Mount-Engine, Rear 37HP [primed
4	138-0408-0P	1	Mount-Engine, RH Front
5	120-6274	2	Mount-Engine
6	139-0856	1	Mount-Engine
7	48-9590	14	Washer-Lock
8	33115-025	14	Screw-HH
9	3234-29	5	Screw-HHF
10	104-8300	8	Nut-HF, NI
11	80-6990	3	Washer-Hardened
12	323-14	3	Screw-HH
13	138-6462	3	Support-Isolator
15	104-8301	3	Nut-HF, NI
16	138-4532-0P	1	Bracket-Filter Mount [primed]
17	125-2914	1	Filter-Separator

Ref.	Part Number	Qty.	Description
17:1	125-2915	1	Filter-Fuel/Water Separator
18	1-807512	2	Bolt-CARR
19	2412-87	1	Clamp-Cable
20	104-7201	2	Nut-HF, NI
21	3230-10	2	Bolt-CARR
22	353-781	2	Fitting-HYD, 90
23	92-2379	6	Clamp-Hose
24	138-0419	1	Shroud-Fan
25	138-0429	1	Hose-Radiator, Upper
26	138-0430	1	Hose-Radiator, Lower
27	2412-34	3	Clamp-Hose
28	2412-3	1	Clamp-Hose
29	33105-020	4	Screw-HHF
30	120-1959	3	Clamp
31	139-6255	1	Hose-Fuel
32	126-1805	1	Hose
33	110-3257	1	Hose-Fuel
34	110-4101	1	Hose-Fuel
35	139-6276	1	Hose-Fuel

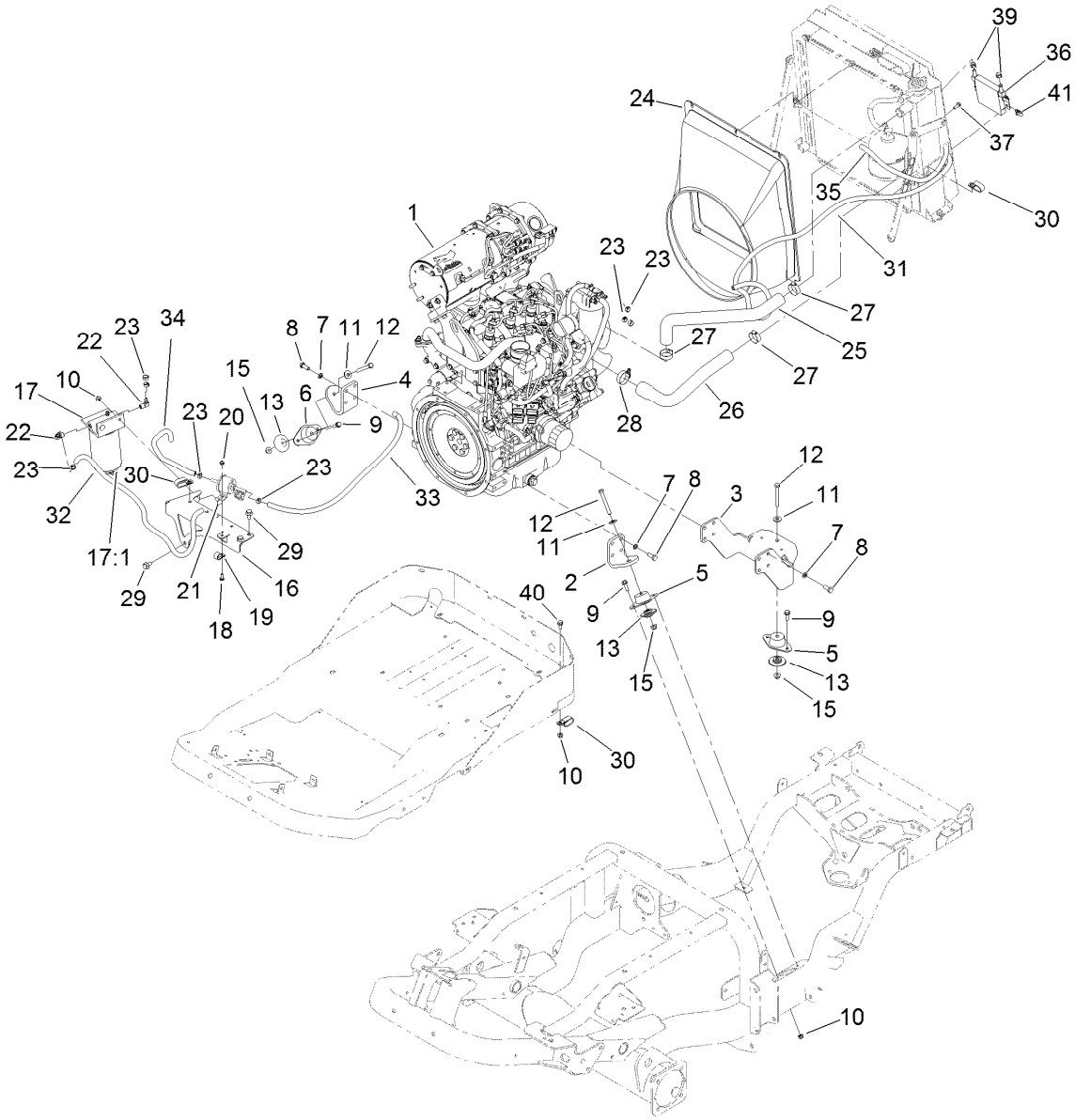

Engine, Radiator Hoses and Shroud Assembly (continued)

Ref.	Part Number	Qty.	Description
36	116-7205	1	Cooler
37	3234-4	4	Screw-HHF
39	103-1988	2	Clamp-Hose
40	3234-47	1	Screw-HHF
41	107069	4	Clip

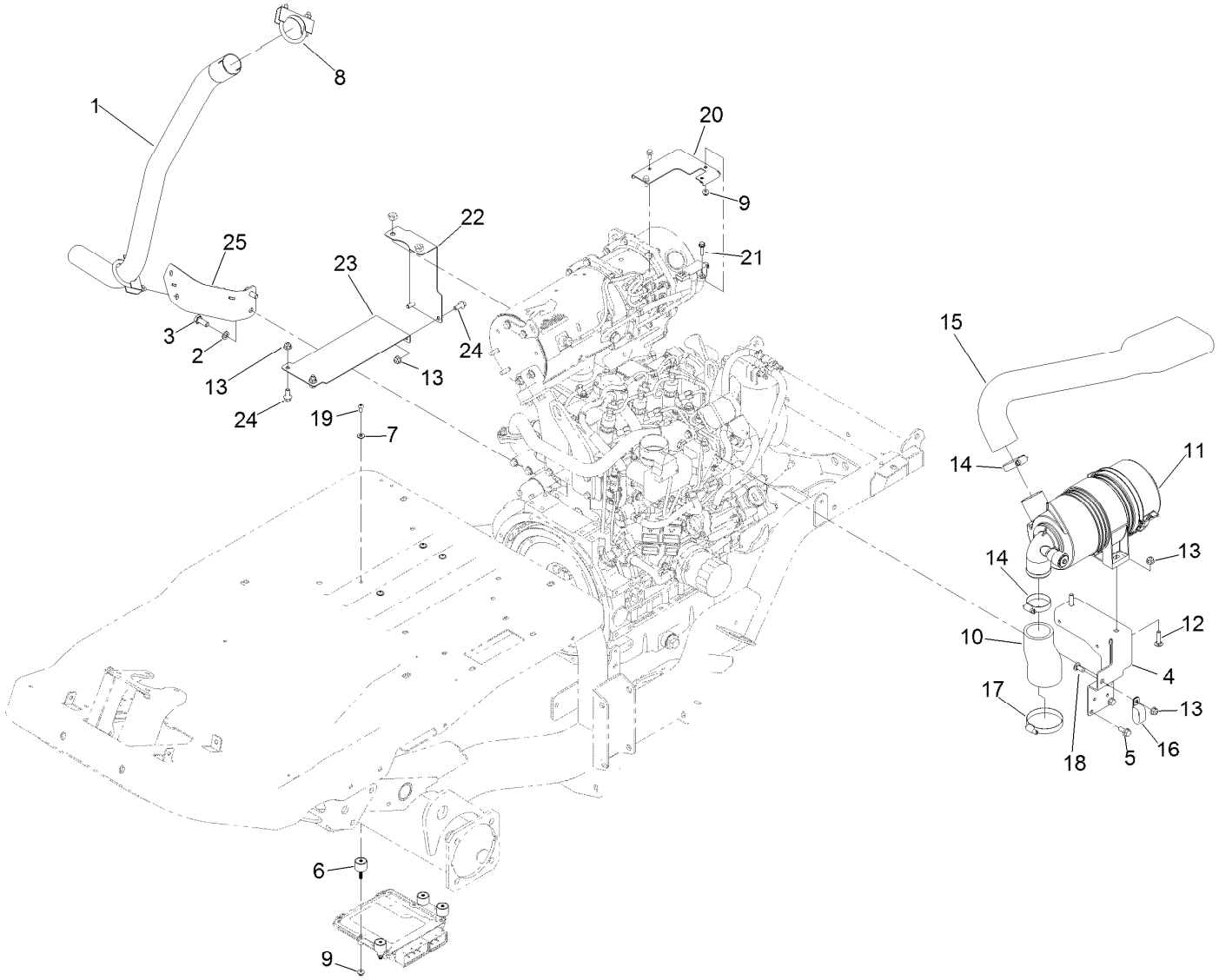

Air Cleaner and Exhaust Assembly

Ref.	Part Number	Qty.	Description
1	144-0569	1	Pipe-Exhaust
2	48-9590	2	Washer-Lock
3	33115-025	2	Screw-HH
4	138-0432-0P	1	Bracket-Air Filter [primed]
5	33104-020	3	Screw-HHF
6	139-6176	4	Mount-ISO
7	3256-1	4	Washer-Flat
8	18-2130	2	Clamp
9	104-7201	6	Nut-HF, NI
10	137-5809	1	Hose-Cleaner, Air
11	136-4481	1	Air Cleaner ASM
12	3230-29	2	Screw-CARR
13	104-8300	7	Nut-HF, NI

Ref.	Part Number	Qty.	Description
14	2412-130	2	Clamp-Hose
15	138-4455	1	Hose-Intake
16	120-1959	1	Clamp
17	2412-53	1	Clamp-Drive, Worm
18	3230-23	1	Bolt-CARR
19	135-6367	4	Screw-HSBH
20	139-6181-0P	1	Bracket-Sensor, Dpf
21	120-4654	2	Screw-HHF
22	139-6185	1	Bracket-Heat Shield, Rear
23	139-6184	1	Bracket-Heat Shield, Lower
24	3234-47	4	Screw-HHF
25	144-0572-03	1	Support-Tailpipe

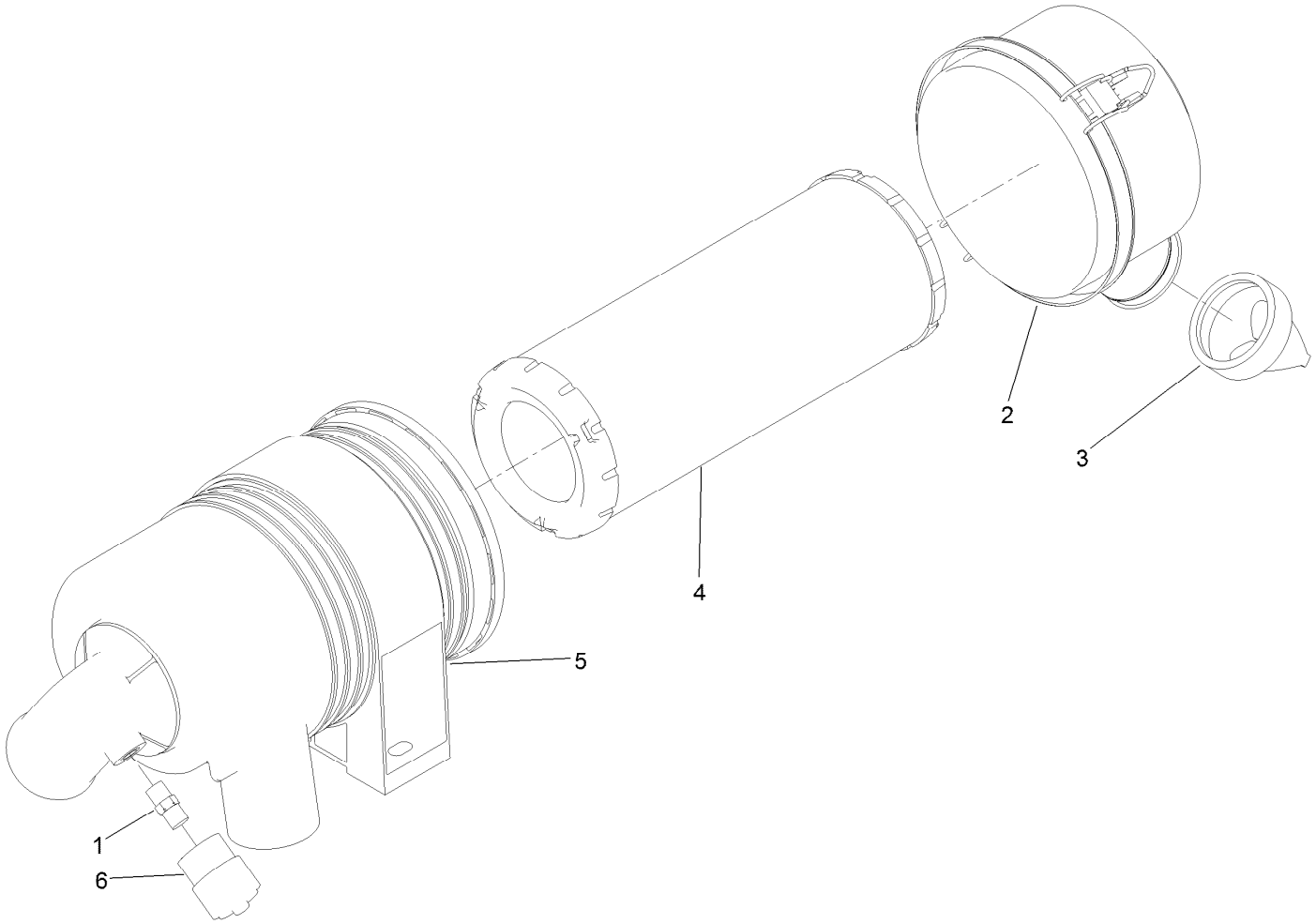

Air Cleaner Assembly No. 136-4481

Ref.	*Part Number*	*Qty.*	*Description*
1	94-1416	1	Adapter-Indicator
2	98-9771	1	Cover ASM
3	94-1414	1	Valve-Vacuator
4	108-3810	1	Filter-Air
5	98-4525	1	Bracket-Cleaner, Air
6	93-9164	1	Indicator-Mini

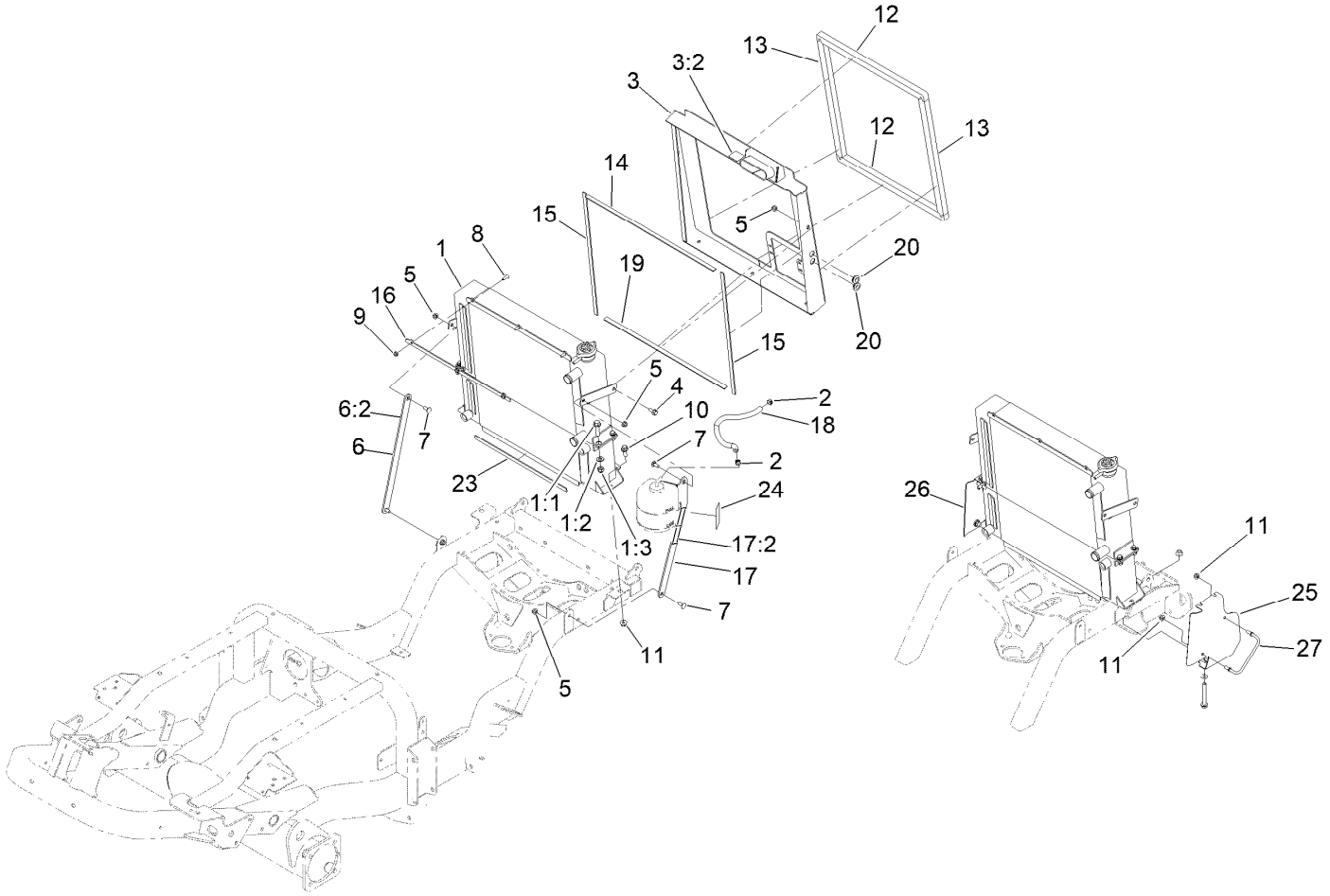

Radiator and Cooler Assembly

Ref.	Part Number	Qty.	Description
1	138-7420	1	Radiator/Oil Cooler ASM
1:1	119-4036	4	Screw-HHF
1:2	3256-23	4	Washer-Plain
1:3	137-3093	4	Nut-Hex
2	92-2379	2	Clamp-Hose
3	139-6232	1	Shroud-Cooler ASM
3:2	115-8155	1	Decal-Warning
4	3234-47	2	Screw-HHF
5	104-8300	15	Nut-HF, NI
6	139-6229	1	Strap-Cooler
6:2	93-7272	1	Decal-Warning
7	3230-23	9	Bolt-CARR
8	1-807512	3	Bolt-CARR
9	104-7201	3	Nut-HF, NI
10	3234-42	2	Screw-HHF
11	104-8301	2	Nut-HF, NI

Ref.	Part Number	Qty.	Description
12	138-4410	2	Seal-Foam
13	138-4411	2	Seal-Foam
14	138-4453	1	Foam-Radiator
15	138-4454	2	Foam-Radiator, Side
16	138-4461-0P	1	Bracket-Shroud Retainer
17	139-6230	1	Bracket-Bottle Mount
17:2	93-7272	1	Decal-Warning
18	106-1126	1	Hose-Fuel
19	108-1393	1	Strip-Foam
20	MSC14544	2	Grommet
23	130-9182	1	Foam-Radiator, Short
24	144-0472	1	Decal-Coolant Level
25	144-0537-03	1	Bracket-Cooler Shroud, LH
26	144-0544-03	1	Bracket-Cooler Shroud, RH
27	144-3905	2	Guide-Hose

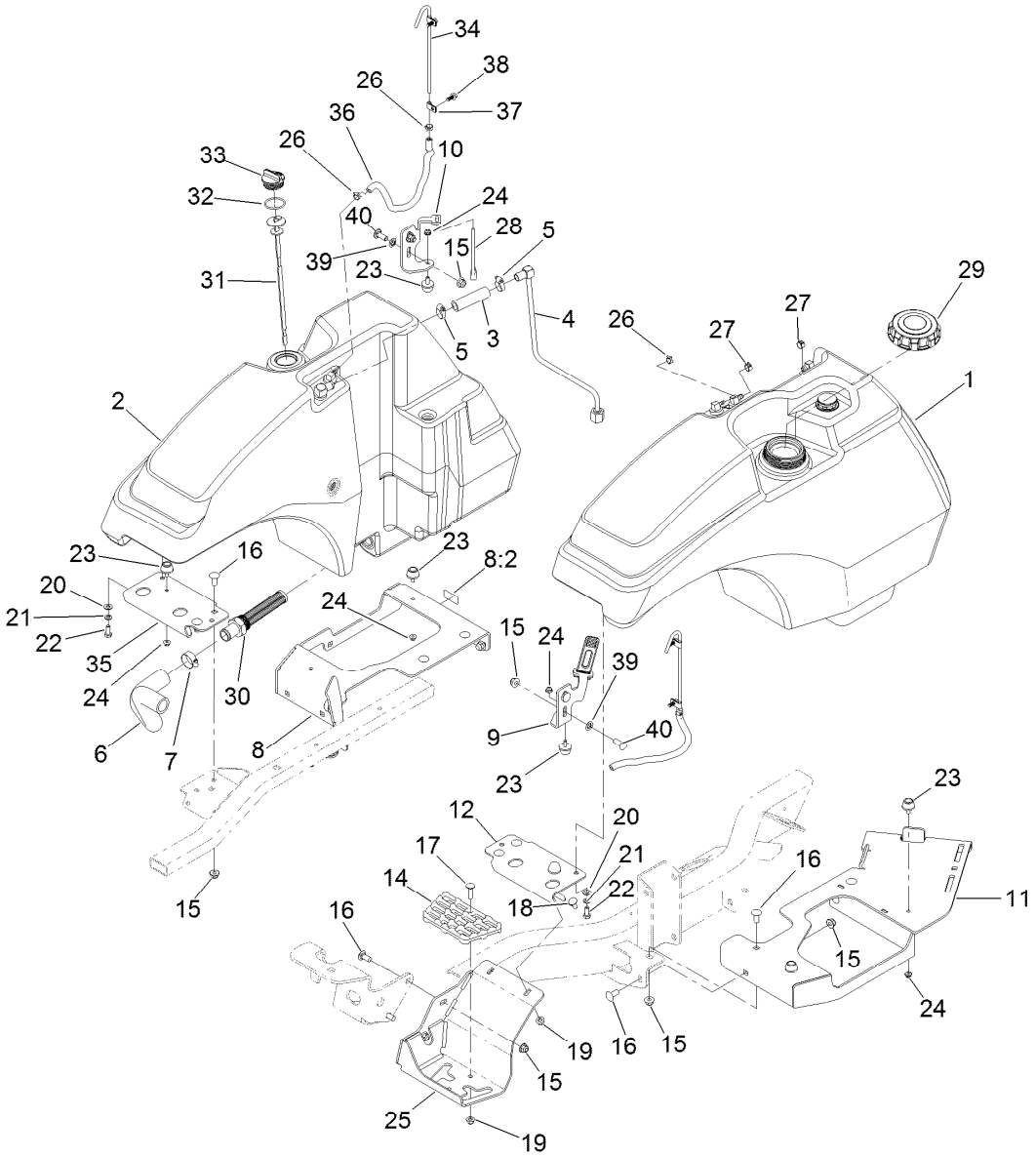

Fuel and Hydraulic Tank Assembly

Ref.	Part Number	Qty.	Description
1	138-0291	1	Fuel Tank
2	138-4418	1	Hydraulics Tank ASM
3	114-4920	1	Hose
4	138-7392	1	Hydraulic Tube ASM
5	2412-119	2	Clamp-Hose, Worm Drive
6	138-7361	1	Hose-Suction
7	2412-34	1	Clamp-Hose
8	139-6228	1	Tank Support-Hydraulic
8:2	127-0392	1	Decal-Hot Surface
9	138-0441-03	1	Bracket-Tank Hold Down, LH
10	138-7315-03	1	Bracket-Tank Hold Down, RH
11	138-4404-03	1	Tray-Tank/Battery
12	138-7365-03	1	Bracket-Tank Mount, Front LH
14	126-4781	1	Step-Deck
15	104-8301	19	Nut-HF, NI
16	3231-27	15	Screw-CARR
17	3230-3	1	Screw-CARR
18	3230-23	2	Bolt-CARR

Ref.	Part Number	Qty.	Description
19	104-8300	3	Nut-HF, NI
20	3256-23	2	Washer-Plain
21	3253-4	2	Washer-Lock
22	322-3	2	Screw-HH
23	109-2365	8	Bumper-Rubber
24	104-7201	8	Nut-HF, NI
25	139-0927-01	1	Bracket-Mount, Step
26	2412-98	4	Clamp-Hose
27	92-2379	2	Clamp-Hose
28	131-8402	2	Strap-Down, Hold
29	125-9171	1	Cap-Fuel
30	138-7499	1	Fitting-Strainer
31	138-7388	1	Dipstick
32	94-8166	1	O-Ring
33	93-7498	1	Plug-Plastic
34	139-6252	2	Tube-Vent
35	139-0940-03	1	Bracket-Tank Mount, Front RH
36	139-6253	2	Hose-Fuel
37	2412-72	4	Clip-Closed, Insulated
38	99-6810	4	Screw-HHF

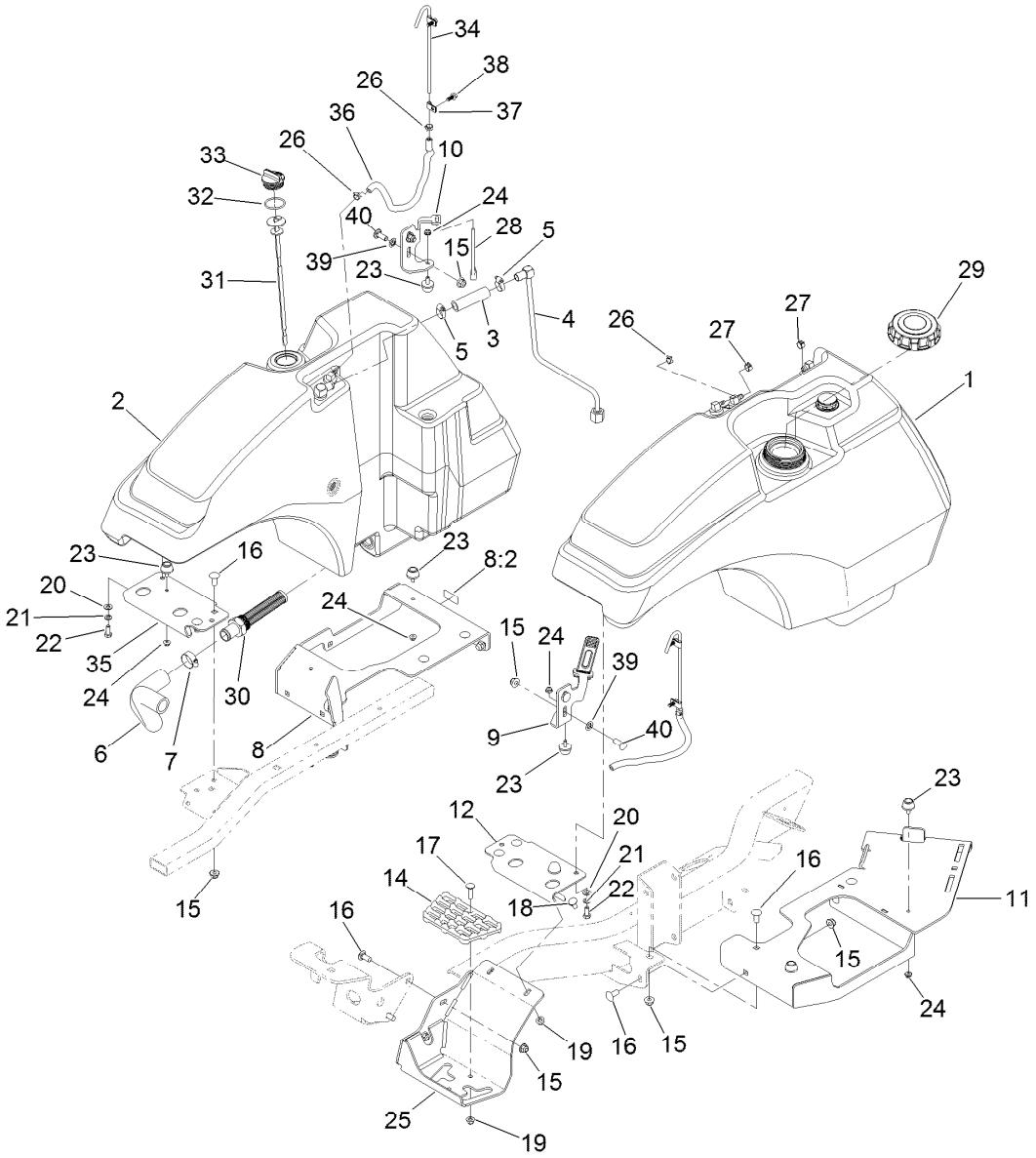

Fuel and Hydraulic Tank Assembly (continued)

Ref.	*Part Number*	*Qty.*	*Description*
39	107-3154	6	Nut-Push
40	3231-22	4	Screw-CARR

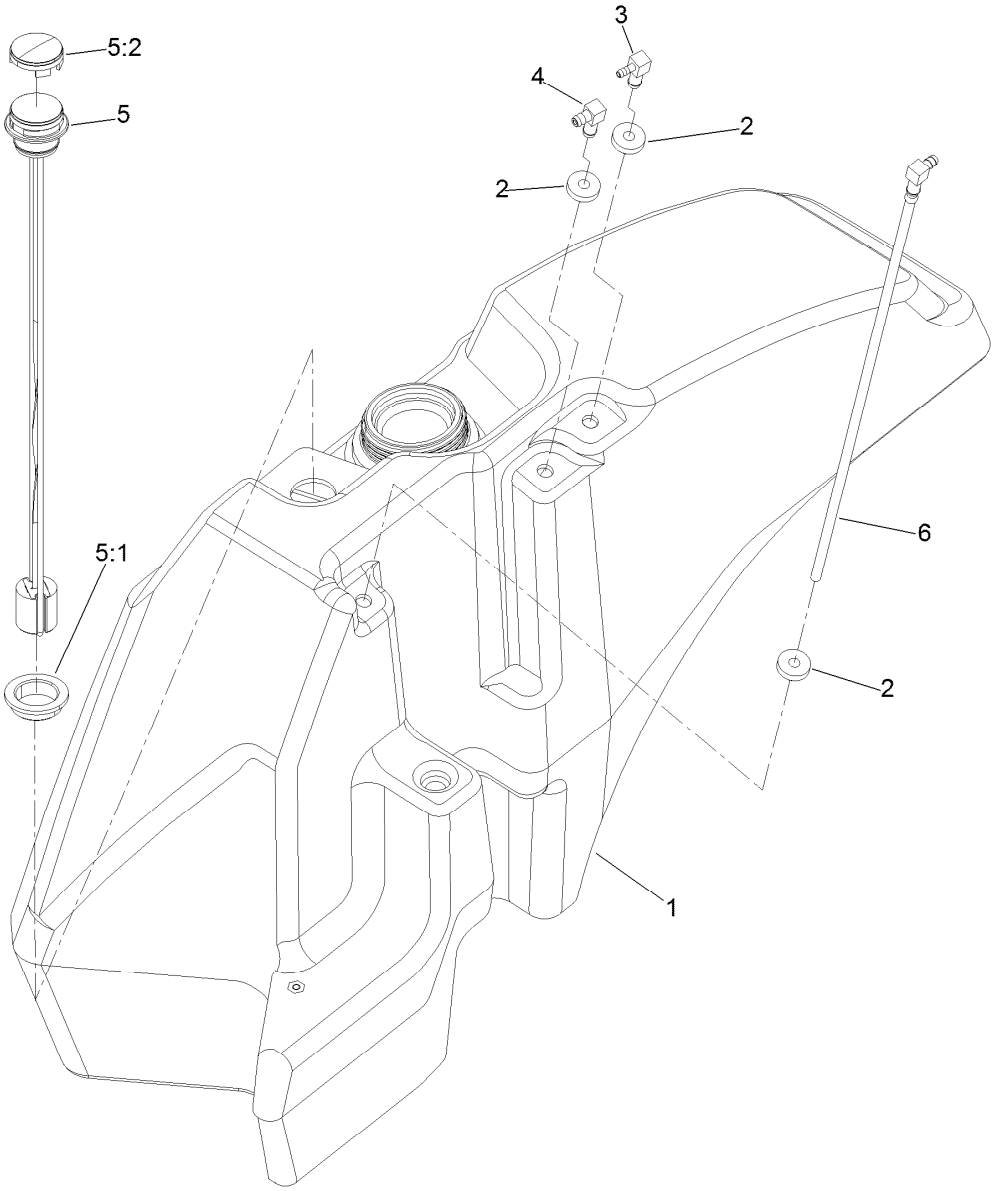

Fuel Tank Assembly No. 138-0291

Ref.	*Part Number*	*Qty.*	*Description*
1	138-7385	1	Fuel Tank W/Inserts ASM
2	46-6560	3	Bushing
3	104-5228	1	Fitting-Elbow, 90 DEG
4	46-6550	1	Fitting-Elbow, 90 DEG
5	139-0872	1	Gauge-Fuel
5:1	119-0508	1	Seal
5:2	117-8404	1	Dial-Gauge
6	138-7389	1	Pipe-Stand

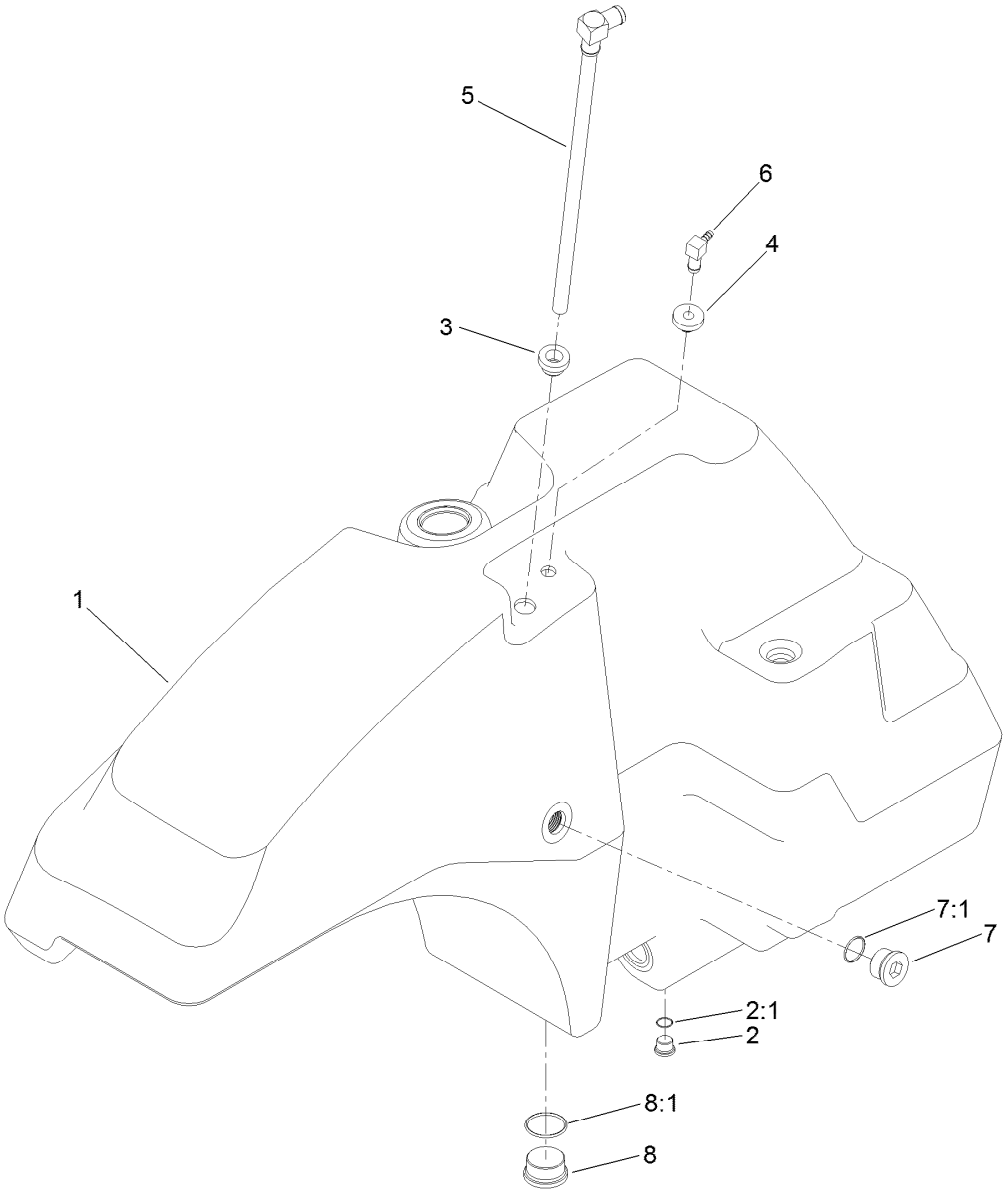

Hydraulic Tank Assembly No. 138-4418

Ref.	*Part Number*	*Qty.*	*Description*
1	138-7386	1	Tank-Hydraulic W/Inserts
2	353-989	1	Plug-Hex, Hollow
2:1	237-42	1	O-Ring
3	104-0790	1	Bushing
4	46-6560	1	Bushing
5	138-7384	1	Tube-Drop
6	104-5228	1	Fitting-Elbow, 90 DEG
7	139-6333	1	Fitting-Plug
7:1	237-81	1	O-Ring
8	105-3921	1	Fitting-Plug
8:1	237-146	1	O-Ring

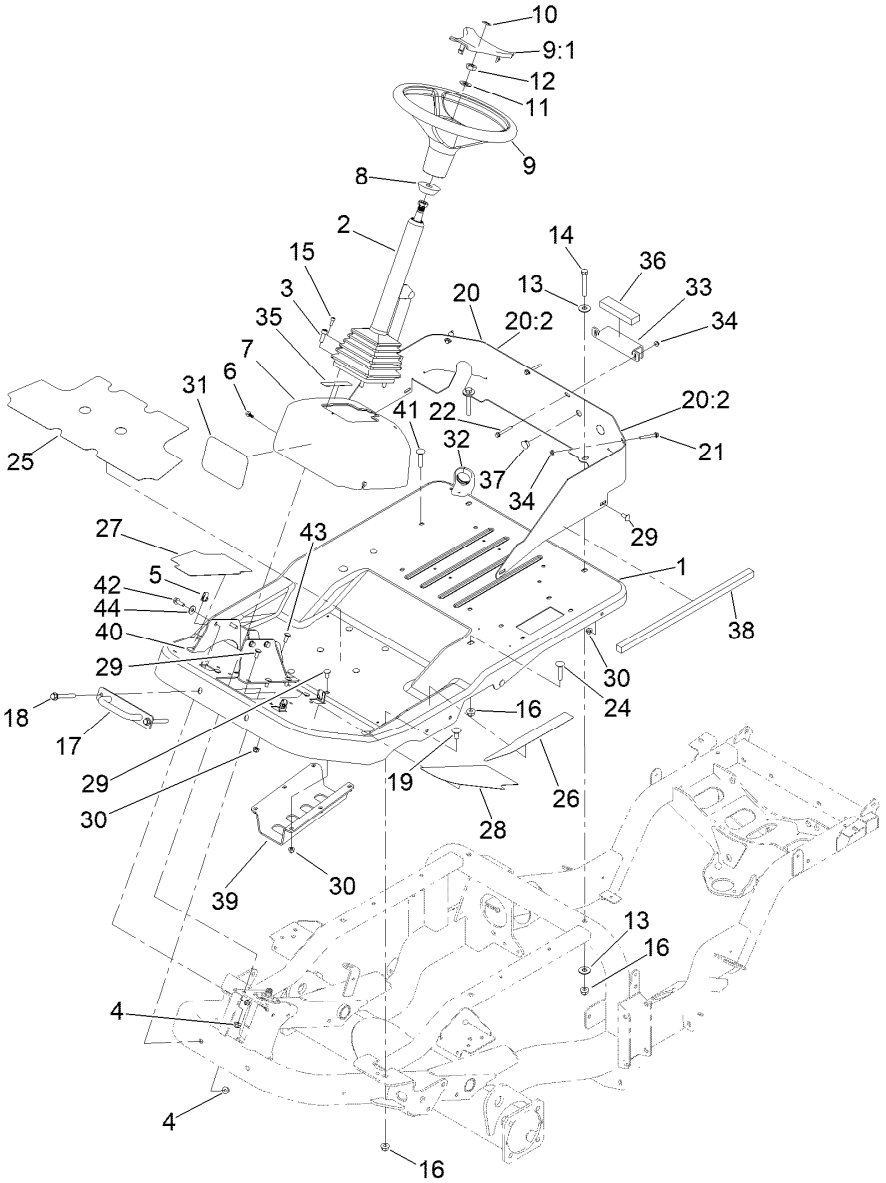

Platform, Steering and Console Assembly

Ref.	Part Number	Qty.	Description
1	144-4030SP	1	Platform-Stamped
2	139-0857	1	Column-Steering, Tilt
3	3274-7	4	Screw-HSH
4	104-8301	6	Nut-HF, NI
5	107069	4	Clip
6	99-6810	4	Screw-HHF
7	138-7494	1	Cover-Steering
8	93-5429	1	Collar-Foam
9	98-1471	1	Wheel-Steering
9:1	98-1468	1	Cover-Wheel, Steering
10	98-1459	1	Decal
11	3256-27	1	Washer-Flat
12	3296-33	1	Nut-Lock, NI
13	3256-40	4	Washer-Flat
14	324-12	2	Screw-HH
15	105-2409	4	Screw-HSH
16	114-8417	6	Nut-HF, NI
17	138-0288	1	Bracket-Down, Tie
18	3234-41	2	Screw-HHF
19	3232-1	2	Screw-CARR
20	144-0528	1	Plate-Firewall, Lower

Ref.	Part Number	Qty.	Description
20:2	132-1316	2	Decal-Danger, Belt
21	125-4287	2	Screw-HHF
22	3234-34	2	Screw-HHF
24	3232-5	2	Screw-CARR
25	144-4029	1	Tread-Foot, Main
26	139-0859	1	Tread-Foot, Side
27	139-0885	1	Tread-Foot, Front RH
28	139-0886	1	Tread-Foot, Front LH
29	3230-23	15	Bolt-CARR
30	104-8300	22	Nut-HF, NI
31	105-1217	1	Decal
32	144-0473	1	Plug-Harness, Firewall
33	139-2166-0P	1	Bracket-Hood Support
34	104-7201	4	Nut-HF, NI
35	140-1460	1	Decal-Traction Pedal
36	139-6202	1	Foam-Strip
37	130-8439	1	Plug-Dome
38	139-6207	1	Foam-Strip
39	144-3954-03	1	Guard-Tubes, Hydraulic
40	145-5983-0P	1	Bracket-Steering Mount [primed]

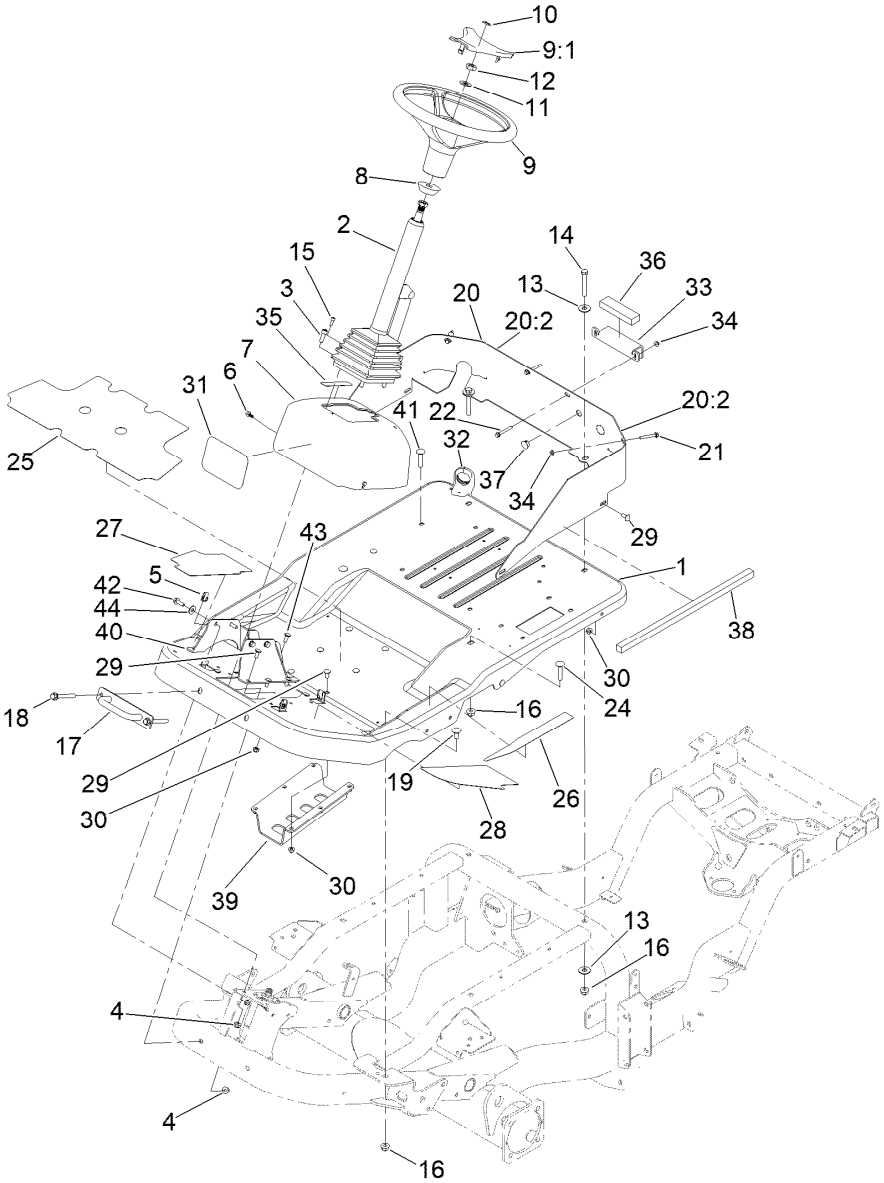

Platform, Steering and Console Assembly (continued)

Ref.	Part Number	Qty.	Description
41	116-0629	2	Screw-CARR
42	3234-29	4	Screw-HHF

Ref.	Part Number	Qty.	Description
43	3230-10	1	Bolt-CARR
44	3256-38	4	Washer-Flat

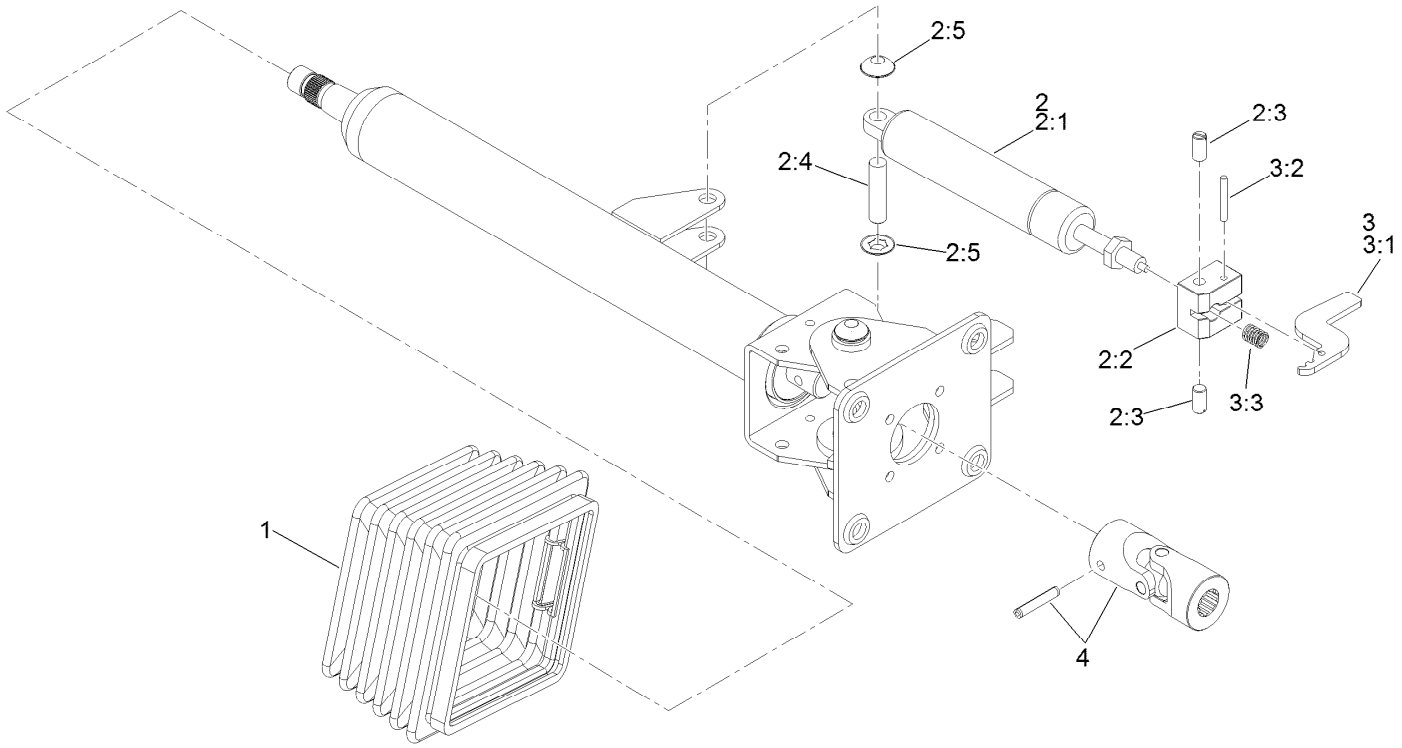

Steering Column Assembly No. 139-0857

Ref.	Part Number	Qty.	Description
1	110-6462	1	Bellows-Rubber
2	110-6463	1	Cylinder Service Kit
2:1		1	Cylinder-Gas ●
2:2		1	Block-Pedal ●
2:3		2	Bolt ●
2:4		1	Pin ●
2:5		2	Washer-Lock ●
3	136-4385	1	Pedal Service Kit
3:1		1	Pedal ●
3:2		1	Pin ●
3:3		1	Spring ●
4	120-6256	1	Universal Joint Kit

● Not serviced separately

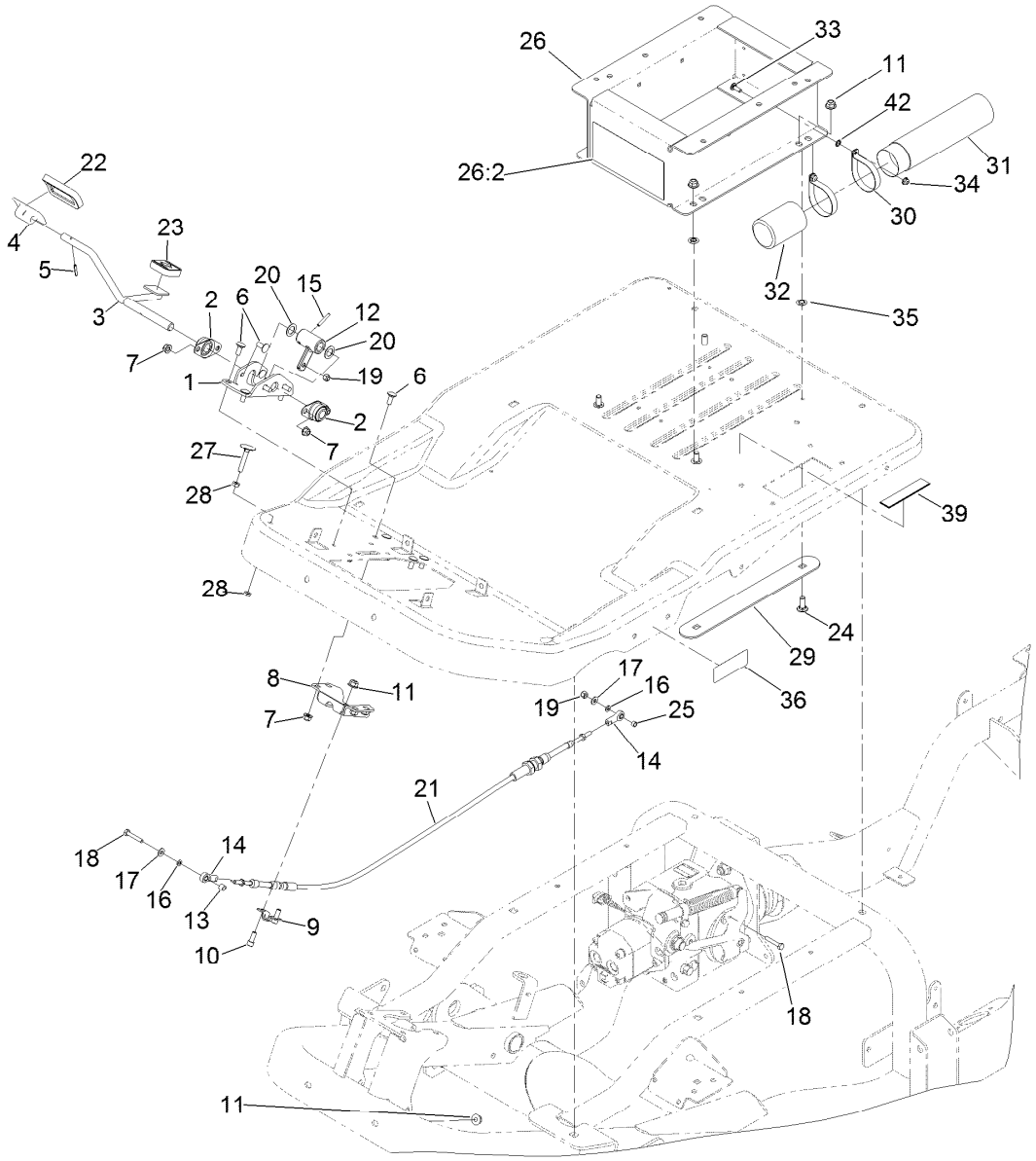

Traction Pedal Assembly

Ref.	Part Number	Qty.	Description
1	138-7477-01	1	Bracket-Pedal, Traction
2	256-236	2	Bearing-Mount, Flange
3	138-4594	1	Pedal-Traction
4	117-9507	1	Pedal-Accelerator
5	32121-45	1	Pin-Spring
6	3230-23	12	Bolt-CARR
7	104-8300	12	Nut-HF, NI
8	138-7446-01	1	Bracket-Cable, Traction
9	93-2092	1	Clamp-Cable
10	3274-10	2	Screw-HSH
11	104-8301	6	Nut-HF, NI
12	117-5199	1	Hub-Pedal, Traction
13	66-8010	1	Spacer
14	2411-41	2	Rod End-Ball Joint
15	32121-6	1	Pin-Roll, Slotted
16	33093-00	2	Washer-Flat
17	3256-22	2	Washer-Flat
18	321-9	2	Screw-HH
19	3296-42	2	Nut-Lock, NI
20	137-2601	2	Washer

Ref.	Part Number	Qty.	Description
21	137-2568	1	Traction-Cable
22	74-9100	1	Pad-Pedal, Forward
23	74-9110	1	Pad-Pedal, Reverse
24	3231-22	4	Screw-CARR
25	130-9691	1	Spacer
26	139-6221	1	Seat Box ASM
26:2	139-6215	1	Decal-Warning
27	115-8240	1	Screw-Elevator
28	3218-2	2	Nut-Hex Jam
29	138-7422-0P	2	Strip-Seat Mount
30	107-1865	2	R-Clamp
31	104-7050	1	Tube-Manual
32	104-7048	1	Cap-Housing
33	1-807512	2	Bolt-CARR
34	104-7201	2	Nut-HF, NI
35	107-3154	4	Nut-Push
36	106-9206	2	Decal-Torque, Wheel
39	133-8062	1	Decal-Arrestor, Spark
42	32115-15	2	Nut-Push

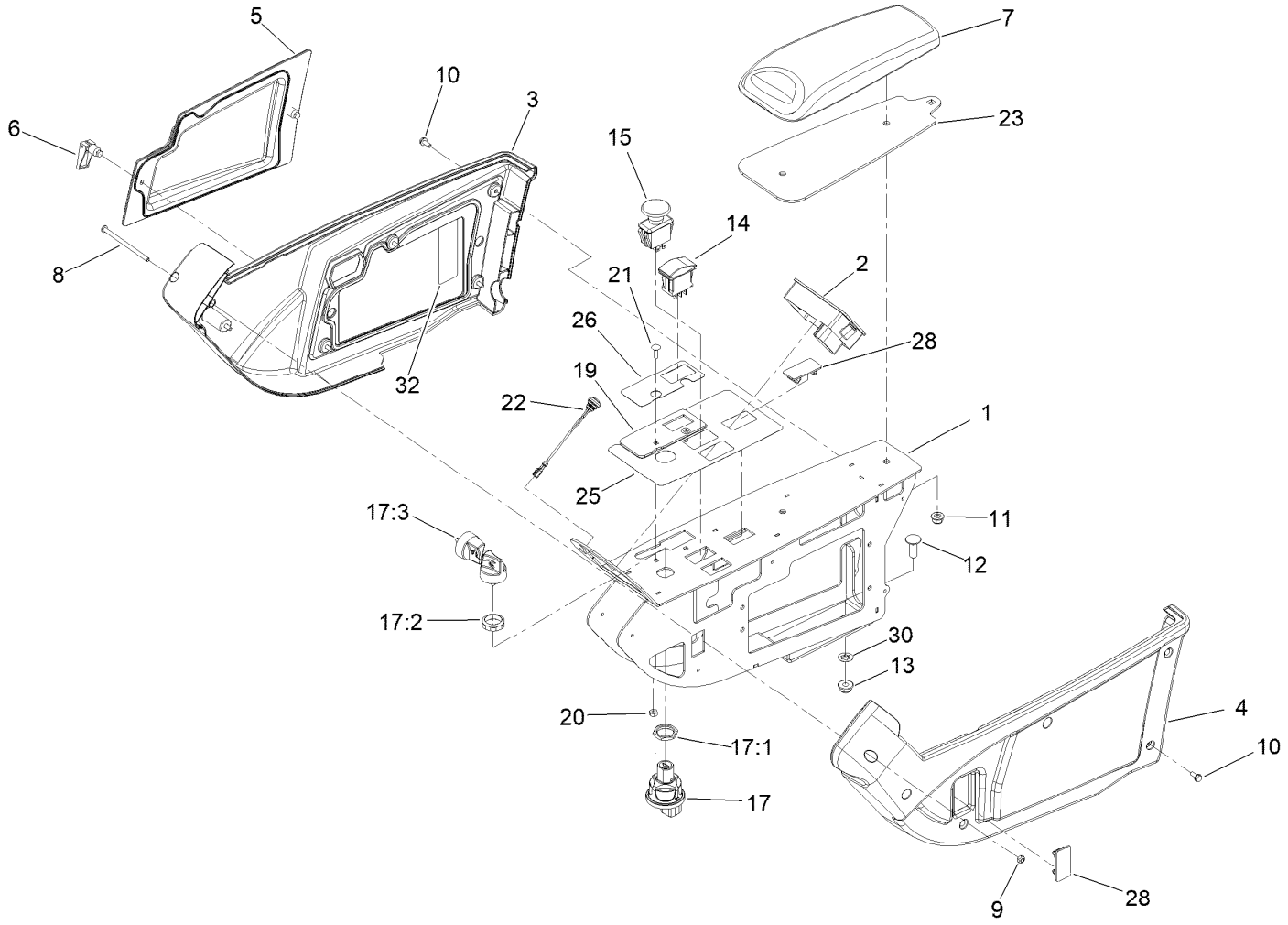

Control Console Assembly

Ref.	Part Number	Qty.	Description
1	133-6406-03	1	Panel
2	132-9751	1	Tdm 2001
3	108-7605	1	Cover-RH
4	108-7604	1	Cover-LH
5	108-7616	1	Panel-Access
6	74-5950	2	Latch-Swell
7	131-9637	1	Armrest-Quick Find
8	3250-22	1	Screw-PPH
9	3296-12	1	Nut-Lock, NI
10	32144-112	10	Screw-HWH
11	104-8300	2	Nut-HF, NI
12	3231-22	2	Screw-CARR
13	104-8301	2	Nut-HF, NI
14	100-1535	2	Switch-Rocker, (On)-Off-(On)

Ref.	Part Number	Qty.	Description
15	93-9999	1	Switch-PTO
17	121-5159	1	Switch-Ignition
17:1	121-5160	1	Nut-Hex
17:2	122-2704	1	Nut-Face, M22 (Plastic)
17:3	121-5162	1	Set-Key, Ignition
19	137-2511	1	Cover-Throttle, Switch
20	3296-2	2	Nut-Lock, NI
21	1-807533	2	Bolt-CARR
22	136-9678	1	Switch-Pushbutton
23	138-4548-03	1	Plate-Spacer, Console Pad
25	138-7471	1	Decal-Console
26	138-7472	1	Decal-Throttle
28	99-7420	2	Plug-Hole
30	107-3154	2	Nut-Push
32	140-3126	1	Decal-Fuse

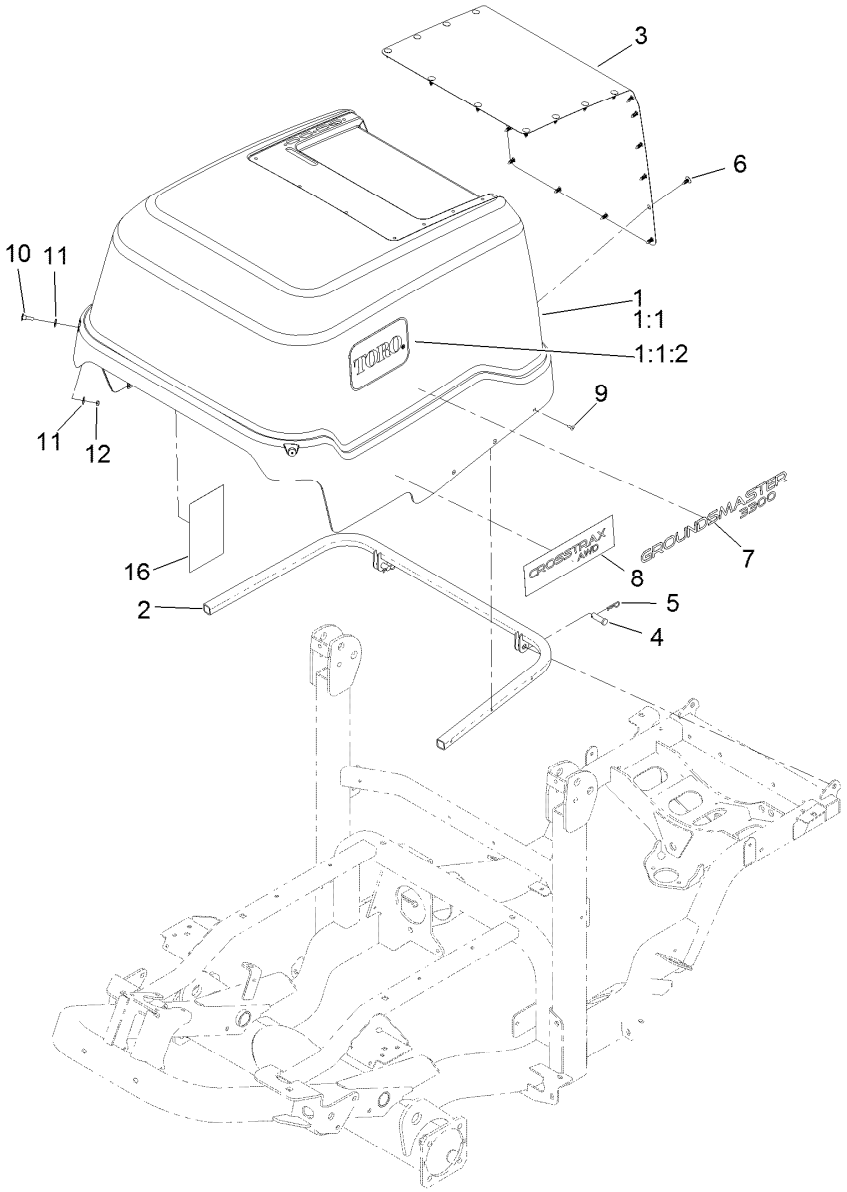

Hood Assembly

Ref.	Part Number	Qty.	Description
1	138-7330SP	1	Hood
1:1		1	Hood ASM ■
1:1:2	62-7400	2	Decal-Toro Logo
1:2	139-6225	1	Tape-Heat, Hood Front ●
1:3	139-6226	1	Tape-Heat, Hood Rear ●
1:4	139-6227	1	Tape-Heat, Hood Side ●
2	138-7331-03	1	Support-Hood
3	138-7474-03	1	Screen-Cooler
4	283-68	2	Pin-Clevis
5	3290-467	2	Pin-Hair
6	117-2382	24	Plug-Plastic
7	139-6152	2	Decal-Identification
8	110-8859	2	Decal
9	114439	10	Rivet-Blind
10	139-0855	2	Screw-Countersunk, Oval
11	3256-2	4	Washer-Flat
12	3296-56	2	Nut-Lock, NI
16	139-6218	1	Decal-Service, Gm3300

● Not illustrated

■ Not serviced separately

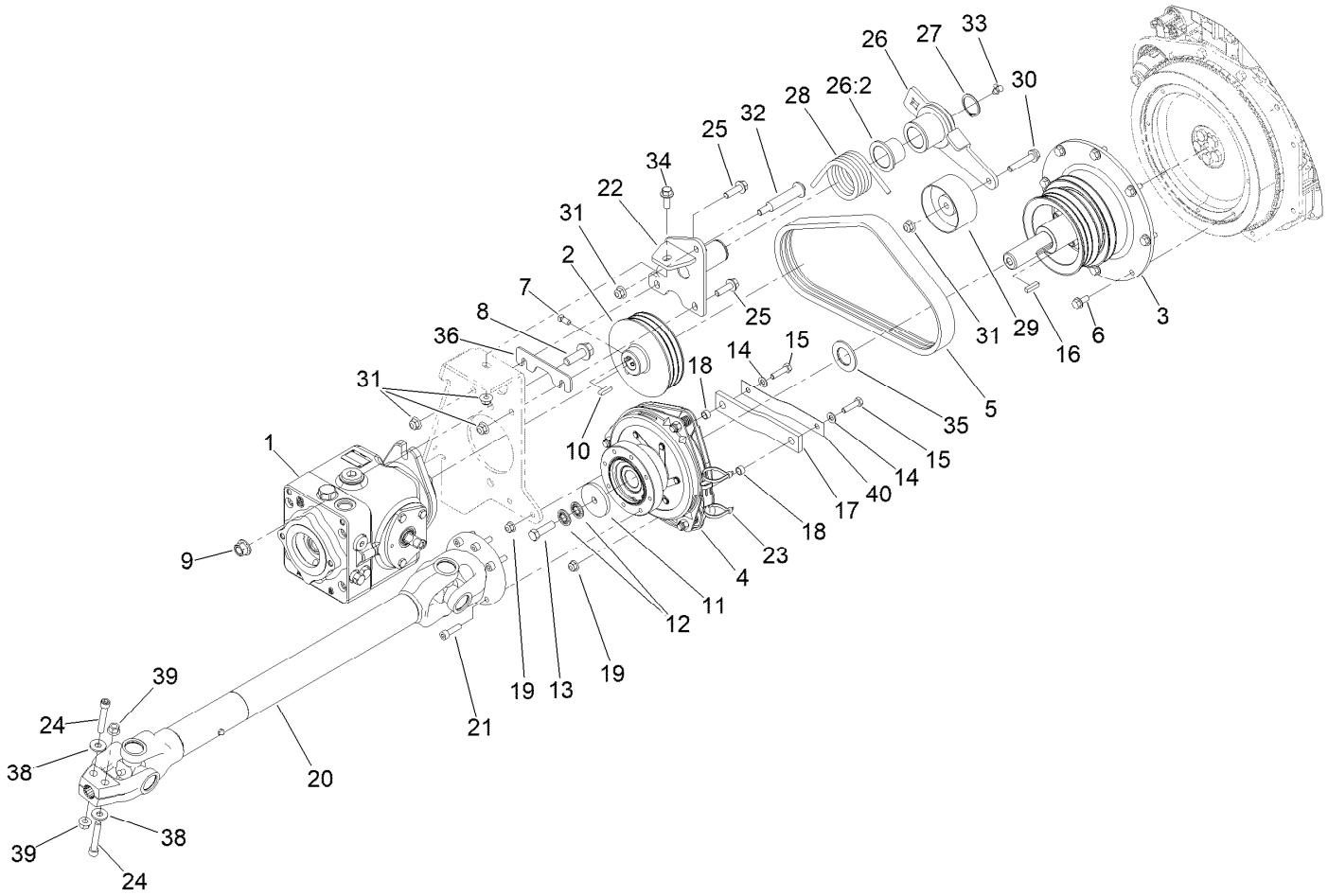

Hydraulic PTO Assembly

Ref.	Part Number	Qty.	Description
1	138-0305	1	Variable Piston Pump ASM
2	139-6257	1	Pulley-3/3V
3	139-6258	1	Stubshaft-3/3V
4	144-4013	1	Clutch-Gt5
5	139-6259	1	Belt-3/3V
6	138-0690	8	Screw-HH
7	1-803022	2	Screw-Set
8	100-6116	2	Screw-HHF
9	99-5107	2	Nut-Lock
10	94-3645	1	Key
11	139-6238	1	Washer
12	1-603610	2	Washer-Spring
13	109-9761	1	Screw-HH
14	3256-23	2	Washer-Plain
15	322-6	2	Screw-HH
16	1-807259	1	Key
17	139-6278	1	Strap-Clutch Stop
18	65-9820	2	Spacer
19	104-8300	3	Nut-HF, NI
20	144-0521SP	1	Driveshaft ASM

Ref.	Part Number	Qty.	Description
21	144-0452	6	Screw-Hex Socket
22	140-3091	1	Idler Pivot ASM
23	3290-378	2	Tie-Cable
24	131-8591	2	Screw-HSH
25	119-4061	2	Screw-HHF
26	140-6179	1	Idler Arm ASM
26:2	93-4510	2	Bushing-Caster
27	32120-84	1	Ring-Snap, External
28	140-3102	1	Spring-Torsion
29	140-3101	1	Pulley-Flat
30	108-3742	1	Screw-HHF
31	104-8301	5	Nut-HF, NI
32	112-3977	1	Bolt-Shoulder
33	302-40	1	Fitting-Grease, 90 DEG
34	3234-42	1	Screw-HHF
35	139-6239	1	Washer
36	144-4046	1	Shim-Pivot
38	80-6990	2	Washer-Hardened
39	32128-36	2	Nut-HF
40	144-4025	1	Strip-Steel, Spring

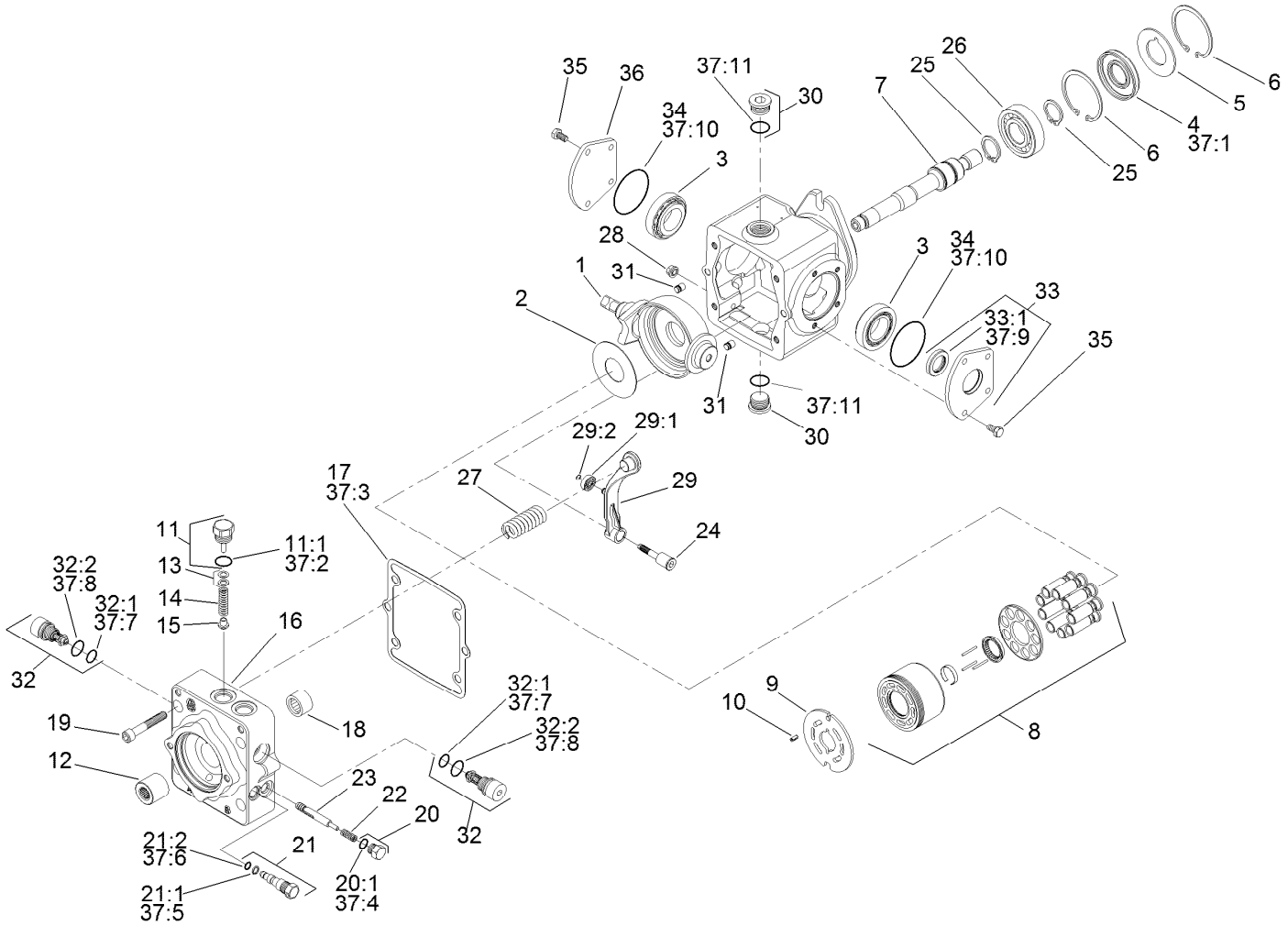

Variable Piston Pump Assembly No. 138-0305

Ref.	Part Number	Qty.	Description
1	140-3111	1	Plate-Swash
2	75-0400	1	Plate-Thrust
3	110-6483	2	Bearing Kit
4	110-6471	1	Seal-Lip
5	95-4400	1	Washer-Backup
6	131-8616	2	Ring-Retaining
7	140-3113	1	Shaft
8	110-6472	1	Cylinder Block Kit ASM
9	140-3114	1	Plate-Valve, CW
10	131-3800	1	Pin-Slotted
11	110-6486	1	Plug-Relief, Charge
11:1	28-3570	1	O-Ring
12	140-3122	1	Coupling
13	140-3115	1	Shim Kit
14	110-6474	1	Spring
15	110-6475	1	Poppet
16	115-8087	1	Cap-End
17	110-6476	1	Gasket-Cap, End

Ref.	Part Number	Qty.	Description
18	75-0500	1	Bearing-Needle
19	110-6489	4	Screw
20	94-9415	2	Plug ASM
20:1		1	O-Ring ■
21	107-4364	1	Bypass Valve ASM
21:1	25-2630	1	Ring-Back Up
21:2	110-6498	1	O-Ring
22	140-3116	2	Spring
23	110-6492	1	Spool-Loop, Flush
24	110-6493	1	Pivot-Return, Neutral
25	125-5280	2	Ring-Retaining
26	75-0460	1	Bearing-Ball
27	140-3117	1	Spring-Neutral Return
28	110-6496	1	Nut-Seal
29	110-6497	1	Neutral Return Arm ASM
29:1	110-6494	1	Bearing-Cam
29:2	110-3056	1	Ring-Retaining
30	69-3130	2	Plug

● Not illustrated

■ Not serviced separately

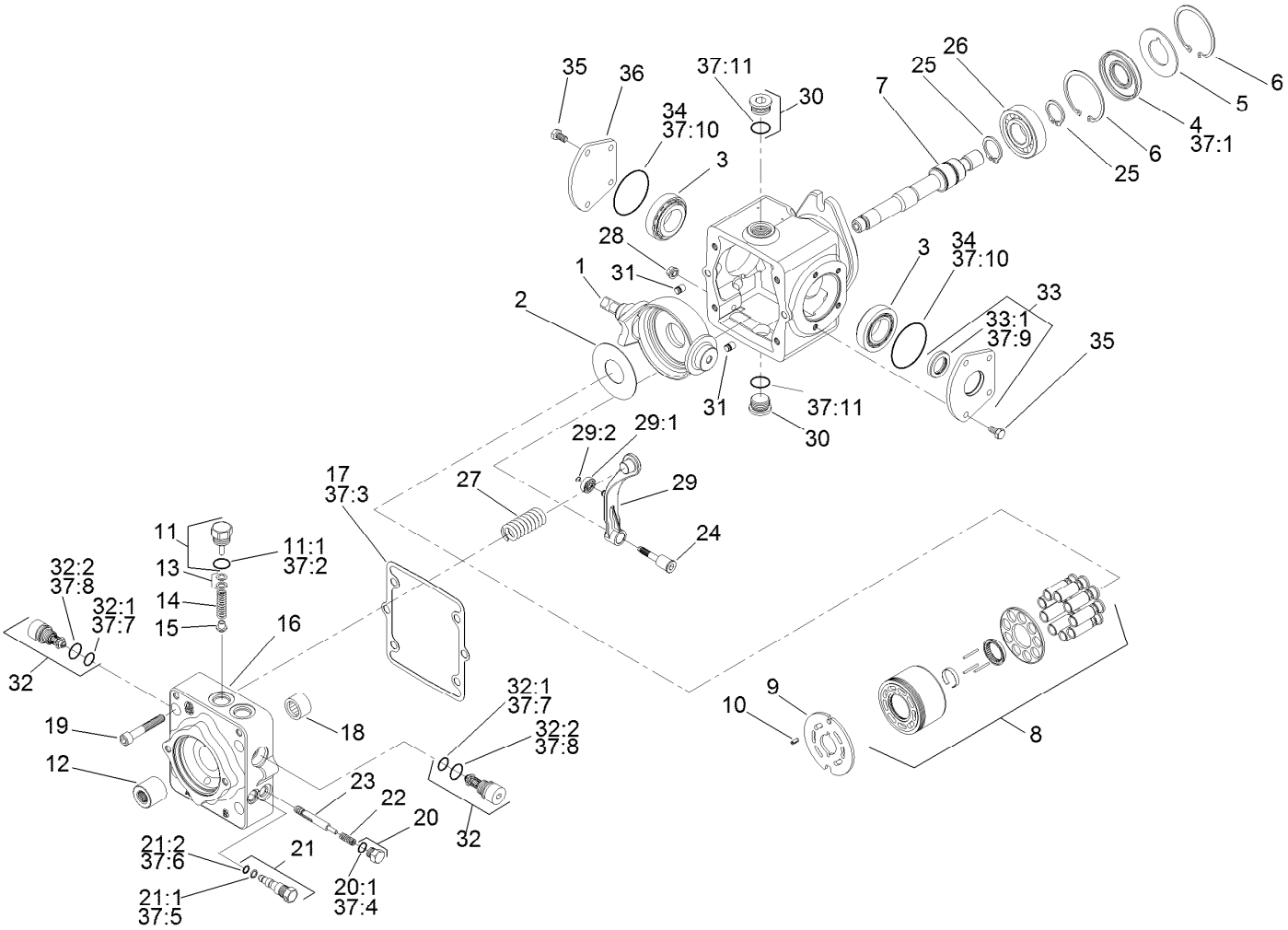

Variable Piston Pump Assembly No. 138-0305 (continued)

Ref.	Part Number	Qty.	Description
31	112-0158	2	Pin
32	110-6477	2	Valve-Relief
32:1	75-0240	1	O-Ring ●
32:2	84-0560	1	O-Ring ●
33	110-6499	1	Trunnion Cover ASM
33:1	110-6478	1	Seal-Lip
34	84-0430	2	O-Ring
35	112-0151	8	Screw
36	84-0440	1	Cover-Trunnion
37	110-6481	1	Seal Kit ●
37:1	110-6471	1	Seal-Lip

Ref.	Part Number	Qty.	Description
37:2	28-3570	1	O-Ring
37:3	110-6476	1	Gasket-Cap, End
37:4	131-8631	2	O-Ring
37:5	25-2630	1	Ring-Back Up
37:6	110-6498	1	O-Ring
37:7	75-0240	2	O-Ring
37:8	84-0560	2	O-Ring
37:9	110-6478	1	Seal-Lip
37:10	84-0430	2	O-Ring
37:11	131-8614	2	O-Ring

● Not illustrated

■ Not serviced separately

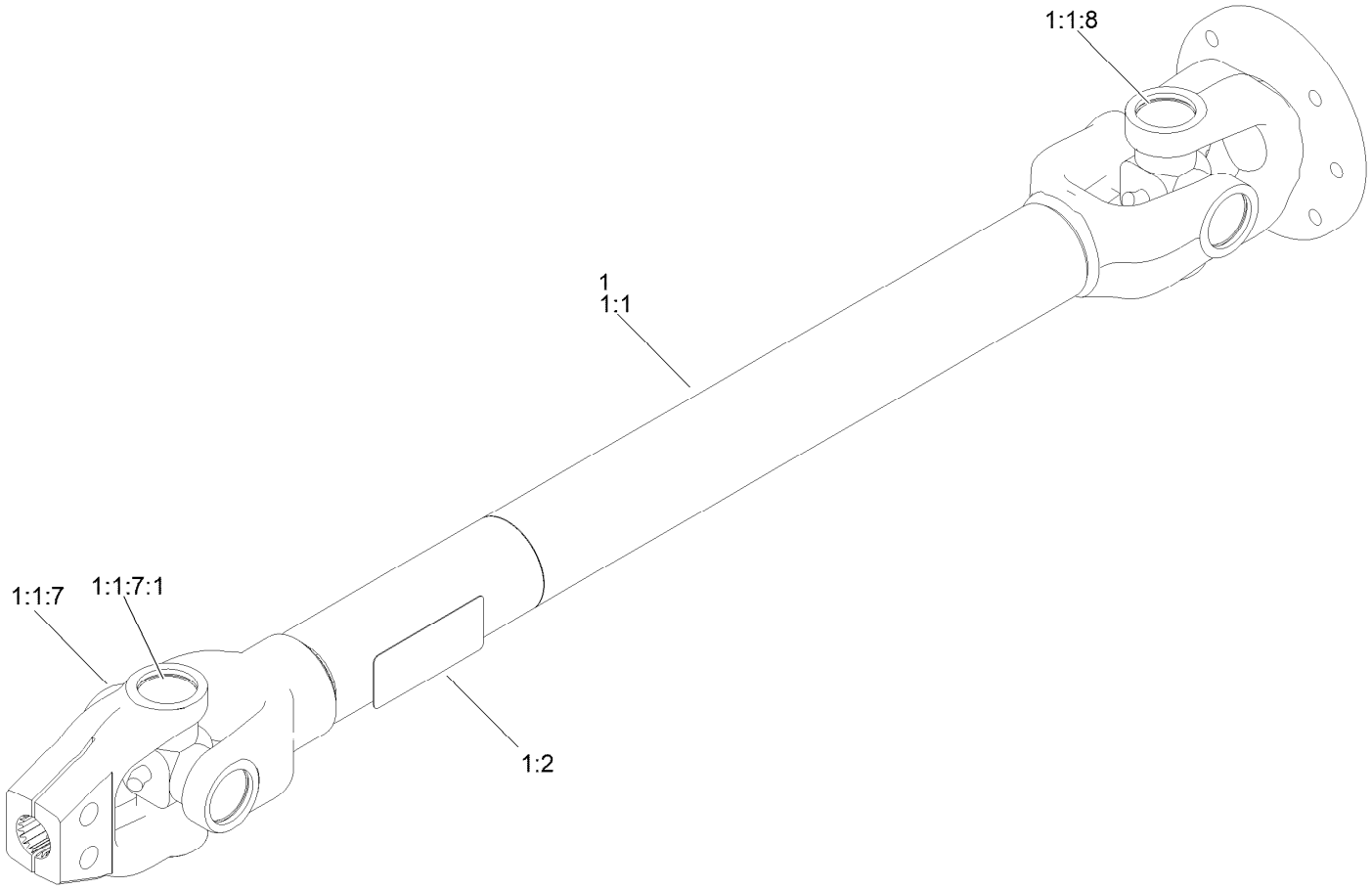

Driveshaft Assembly No. 144-0521SP

Ref.	*Part Number*	*Qty.*	*Description*
1		1	Driveshaft ASM ●
1:1		1	Shaft-Drive, Jdl ●
1:1:7		1	Yoke-Splined W/Cross Joint ●
1:1:7:1	144-0550	1	Bearing-Cross Joint
1:1:8	144-0550	1	Bearing-Cross Joint
1:2	139-6304	1	Decal-Danger, Entanglement

● Not serviced separately

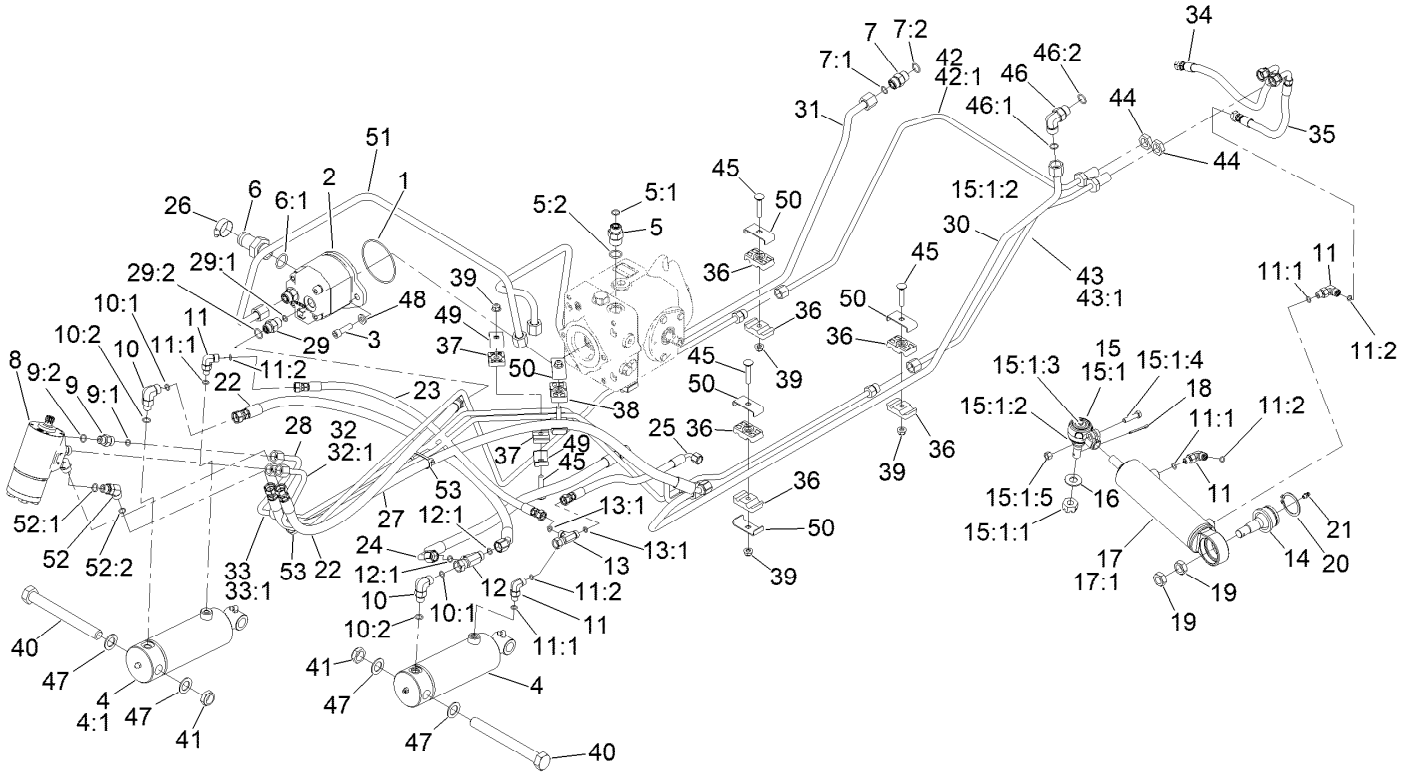

Hydraulic Assembly

Ref.	Part Number	Qty.	Description
1	237-161	1	O-Ring
2	138-0321	1	Pump-Gear
3	3274-1	2	Screw-HSH
4	139-0854	2	Cylinder-Hydraulic
4:1	140-3110	1	Kit-Seal ●
5	340-6	1	Fitting-Straight
5:1	237-30	1	O-Ring
5:2	237-80	1	O-Ring
6	99-3017	1	Fitting
6:1	237-81	1	O-Ring
7	340-4	2	Fitting-Straight
7:1	237-30	1	O-Ring
7:2	237-79	1	O-Ring
8	114-8119	1	Steering Valve ASM
9	340-2	3	Fitting-Straight
9:1	237-22	1	O-Ring
9:2	237-42	1	O-Ring
10	340-77	2	Fitting-Elbow, 90 DEG

● Not illustrated

Ref.	Part Number	Qty.	Description
10:1	237-22	1	O-Ring
10:2	237-42	1	O-Ring
11	340-132	4	Fitting-Elbow, 90 DEG
11:1	237-78	1	O-Ring
11:2	237-21	1	O-Ring
12	340-115	1	Fitting-Tee
12:1	237-22	2	O-Ring
13	340-151	1	Fitting-Tee
13:1	237-21	2	O-Ring
14	106-6774	1	Joint-Ball
15	106-6895-03	1	Ball Joint ASM
15:1		1	Joint-Ball ■
15:1:1	32136-13	1	Nut-SHH
15:1:2	106-6896	1	Seal
15:1:3	302-5	1	Fitting-Grease
15:1:4	3210-7	1	Screw-HH
15:1:5	32152-5	1	Nut-Hex
16	69-8980	1	Washer

■ Not serviced separately

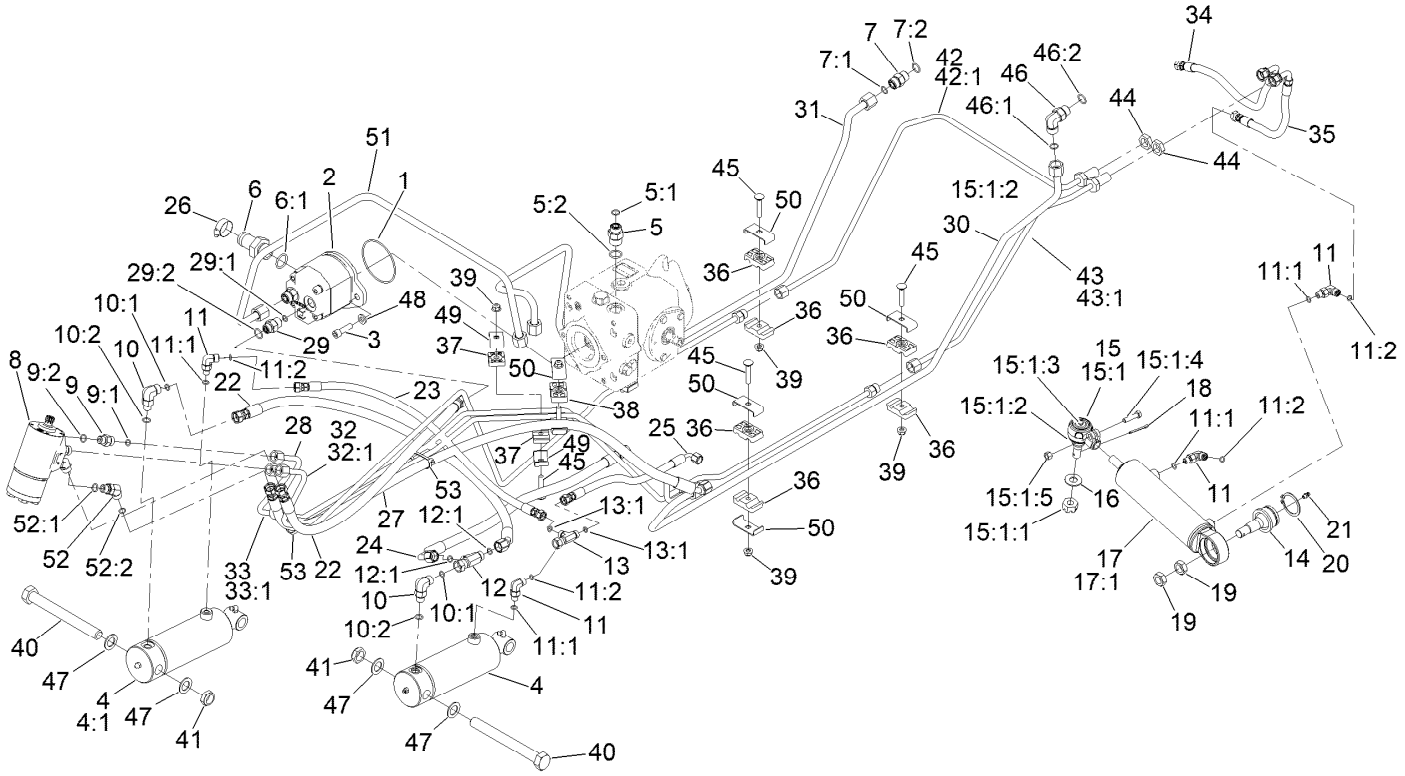

Hydraulic Assembly (continued)

Ref.	Part Number	Qty.	Description
17	139-6277	1	Steering Cylinder
17:1	140-3120	1	Kit-Seal ●
18	3272-12	1	Pin-Cotter
19	3220-6	2	Nut-Jam
20	32151-104	1	Ring-Retaining, External
21	302-5	1	Fitting-Grease
22	137-5844	2	Hose ASM
23	137-5845	1	Hose ASM
24	137-5846	1	Hose ASM
25	137-5847	1	Hose ASM
26	2412-34	1	Clamp-Hose
27	140-3097	1	Hose ASM
28	138-0331	1	Hydraulic Tube ASM
29	340-3	1	Fitting-Straight
29:1	237-22	1	O-Ring
29:2	237-79	1	O-Ring
30	138-7448	1	Hydraulic Tube ASM
31	138-7447	1	Hydraulic Tube ASM

Ref.	Part Number	Qty.	Description
32	138-0333	1	Hydraulic Tube ASM
32:1	237-22	1	O-Ring
33	138-0336	1	Hydraulic Tube ASM
33:1	237-22	1	O-Ring
34	115-0383	1	Hose ASM
35	137-2584	1	Hose ASM
36	56-7972	8	Clamp-Tube
37	56-7973	2	Clamp-Tube
38	56-7970	2	Clamp-Tube
39	104-8300	6	Nut-HF, NI
40	328-23	2	Screw-HH
41	HDW02059	2	Nut-Hex
42	138-0343	1	Hydraulic Tube ASM
42:1	237-22	1	O-Ring
43	138-0344	1	Hydraulic Tube ASM
43:1	237-22	1	O-Ring
44	340-70	2	Nut-Lock
45	3230-5	6	Bolt-CARR

● Not illustrated

■ Not serviced separately

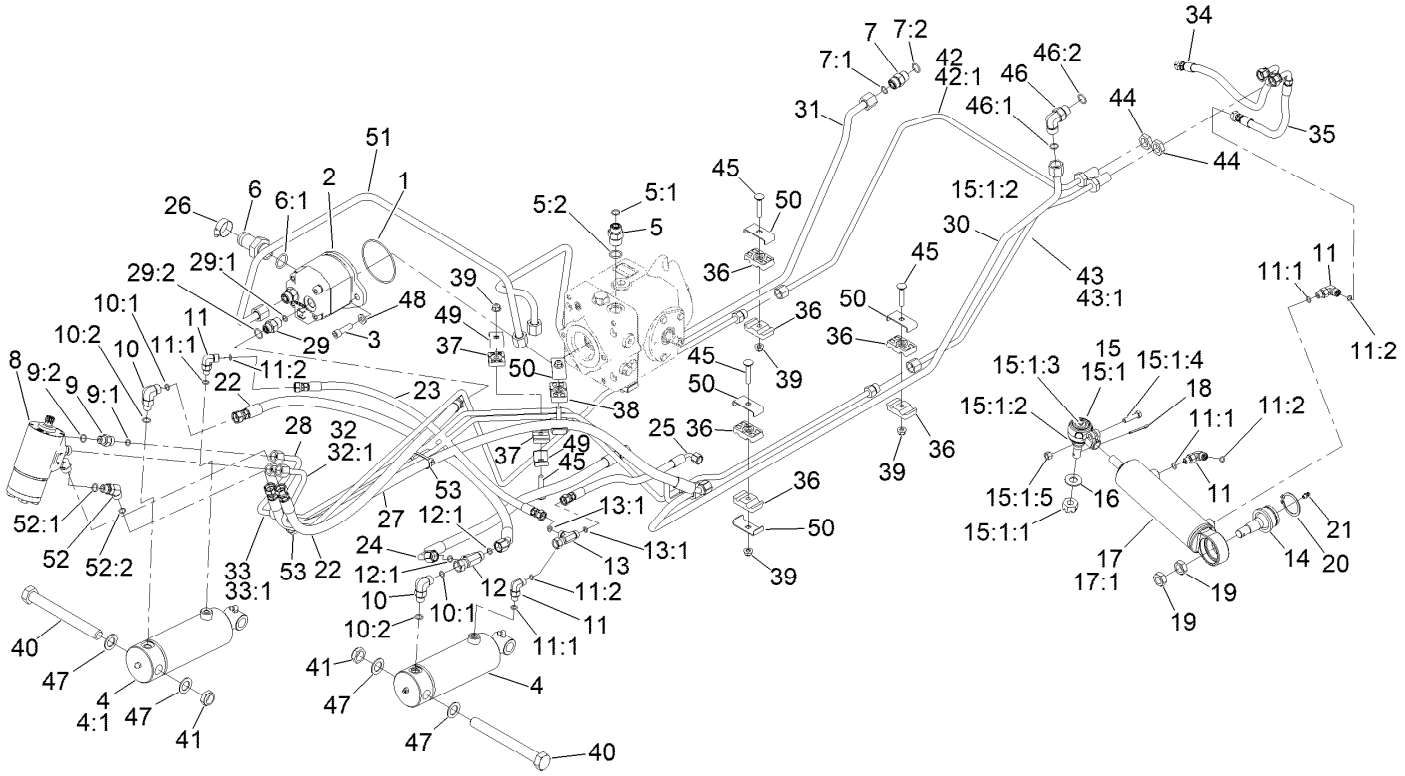

Hydraulic Assembly (continued)

Ref.	Part Number	Qty.	Description
46	340-98	1	Fitting-Elbow, 90 DEG
46:1	237-79	1	O-Ring
46:2	237-30	1	O-Ring
47	126-7888	4	Washer-Nylon
48	139-6293	2	Washer
49	119-1418	2	Plate-Clamp, Short

Ref.	Part Number	Qty.	Description
50	119-1419	8	Plate-Clamp
51	138-0342	1	Hydraulic Tube ASM
52	340-87	2	Fitting-Elbow, 45 DEG
52:1	237-22	1	O-Ring
52:2	237-42	1	O-Ring
53	3290-378	2	Tie-Cable

● Not illustrated

■ Not serviced separately

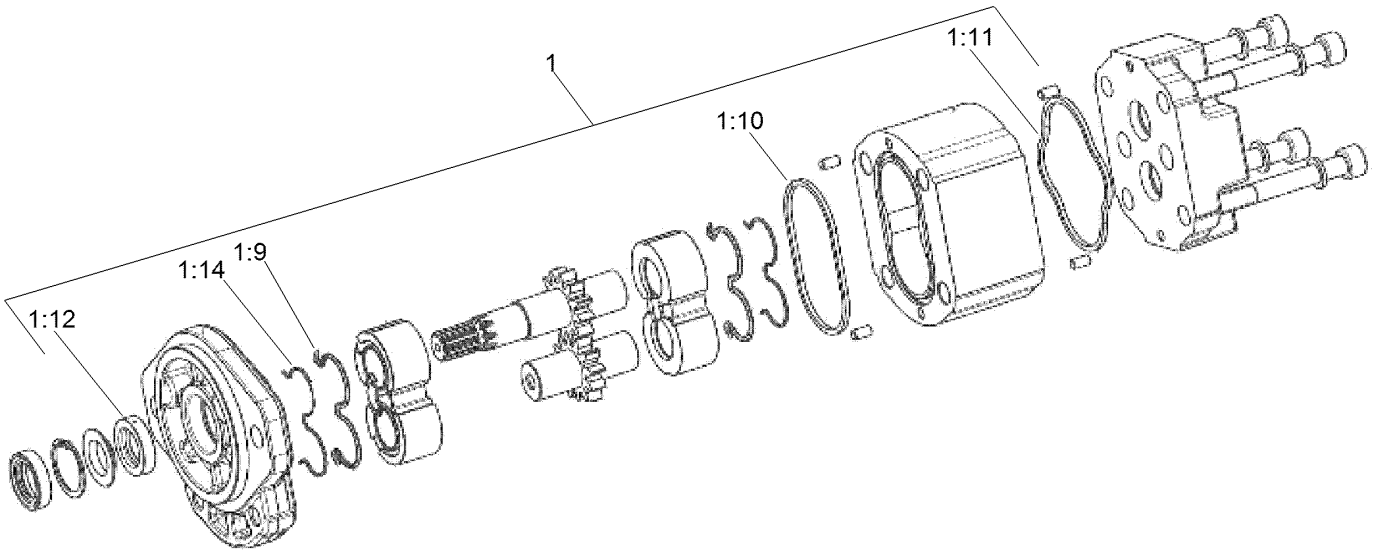

Gear Pump Assembly No. 138-0321

Ref.	*Part Number*	*Qty.*	*Description*
1	139-6299	1	Kit-Seal
1:9		1	Seal ●
1:10		1	Seal-Standard ●
1:11		1	Seal-Square ●
1:12		1	Seal-Shaft ●
1:14		1	Anti Extrusion ●

● Not serviced separately

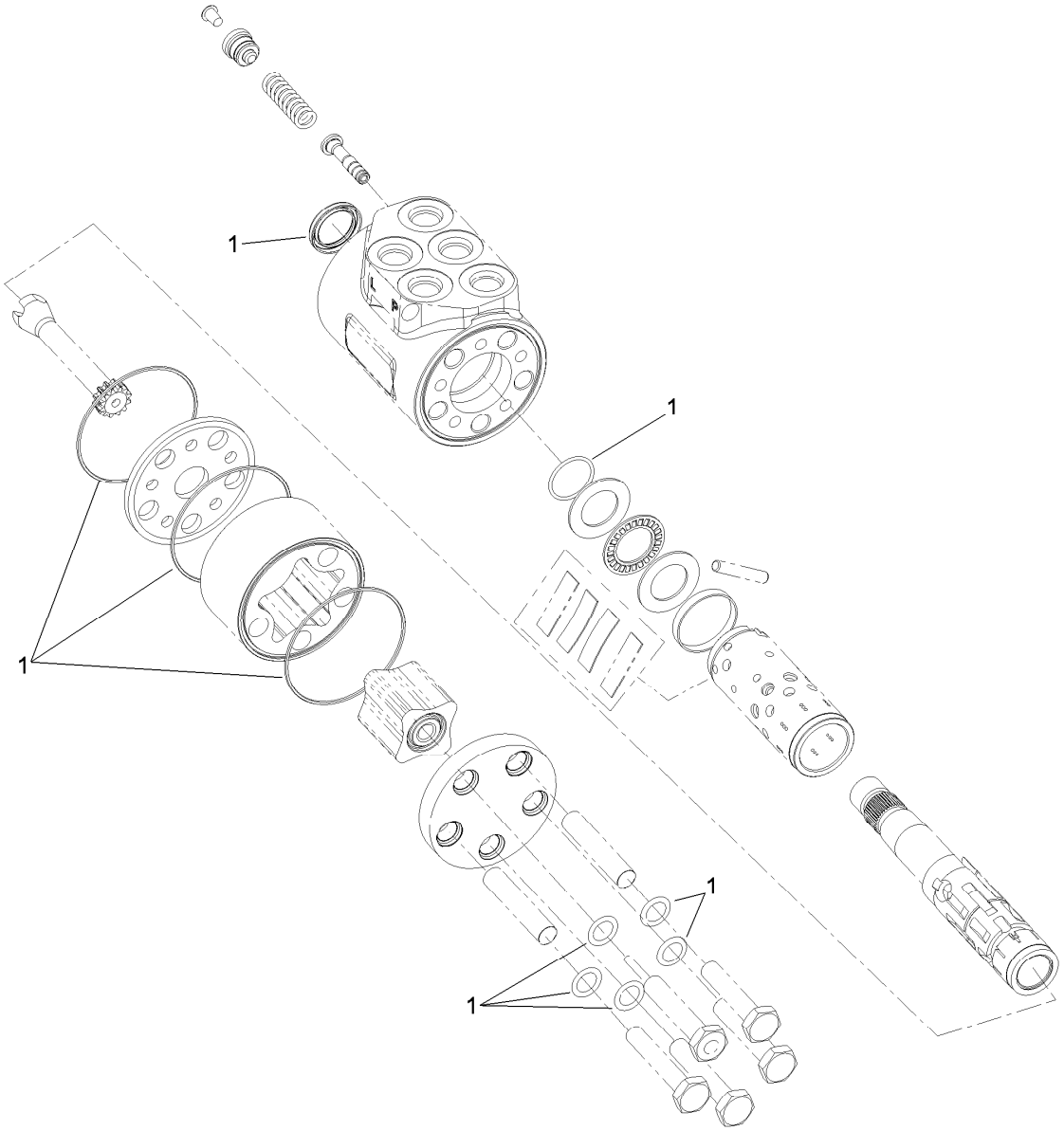

Steering Valve Assembly No. 114-8119

Ref.	*Part Number*	*Qty.*	*Description*
1	106-6716	1	Seal Kit

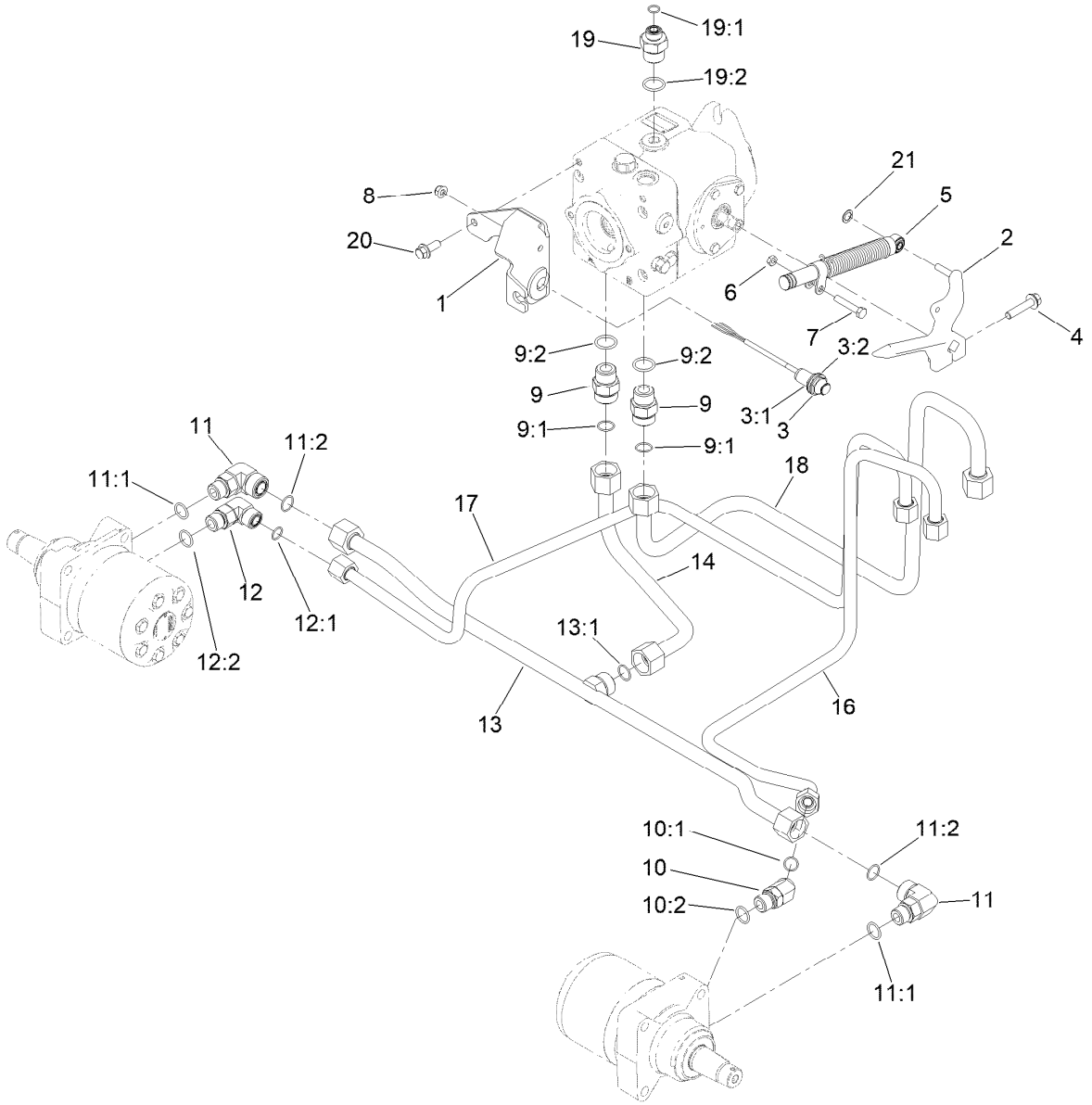

Traction Hydraulic Assembly

Ref.	Part Number	Qty.	Description
1	139-6195-0P	1	Bracket-Cable Support [primed]
2	138-6378	1	Lever-Pump
3	115-5300	1	Proximity Switch ASM
3:1	117-3207	2	Nut-Hex
3:2	117-3208	2	Washer-Lock, Internal Tooth
4	3234-19	1	Screw-HHF
5	140-6248	1	Damper
6	3218-2	1	Nut-Hex Jam
7	322-10	1	Screw-HH
8	104-8300	1	Nut-HF, NI
9	340-9	2	Fitting-STR
9:1	237-58	1	O-Ring
9:2	237-81	1	O-Ring
10	340-14	1	Fitting-HYD, 45 DEG
10:1	237-65	1	O-Ring
10:2	237-80	1	O-Ring
11	340-16	2	Fitting-HYD, 90 DEG
11:1	237-80	1	O-Ring
11:2	237-58	1	O-Ring
12	340-17	1	Fitting-Elbow, 90 DEG
12:1	237-65	1	O-Ring
12:2	237-80	1	O-Ring
13	138-0340	1	Hydraulic Tube ASM
13:1	237-58	1	O-Ring
14	138-0341	1	Hydraulic Tube ASM
16	138-0345	1	Hydraulic Tube ASM
17	138-0346	1	Hydraulic Tube ASM
18	138-0339	1	Hydraulic Tube ASM
19	100-4240	1	Fitting-STR
19:1	237-30	1	O-Ring
19:2	237-81	1	O-Ring
20	3234-42	2	Screw-HHF
21	32151-72	1	Ring-Retaining

Electrical Assembly

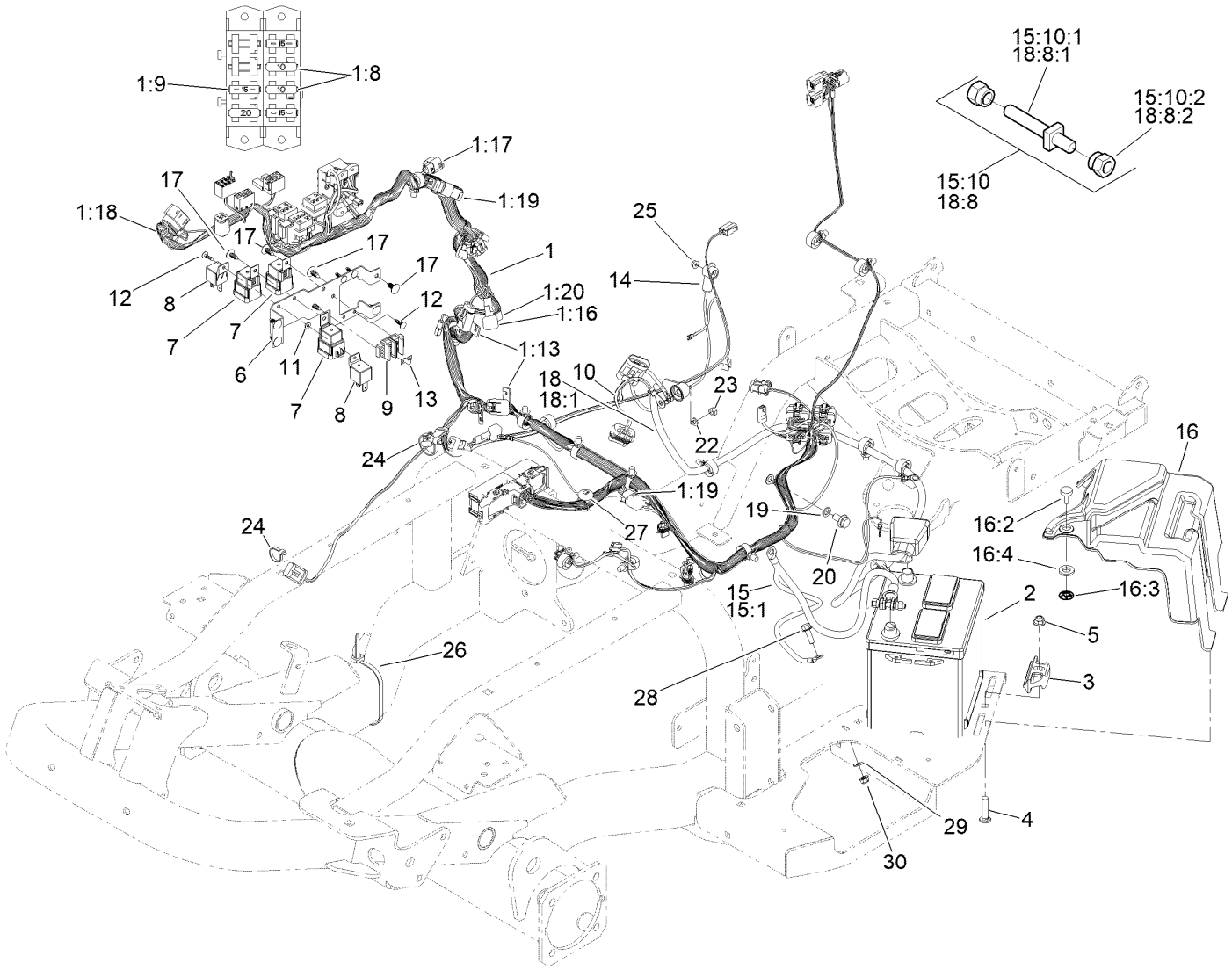

Electrical Assembly (continued)

Ref.	Part Number	Qty.	Description
1	122-1656	1	Harness-Wire, Main Gm33X0
1:8	218-578	4	Fuse-Blade, 10 Amp
1:9	109355	3	Fuse-Blade, 15 Amp
1:13	32180-019	2	Cover-Fuse, Single
1:16	108-9493	1	Diode-Tvs
1:17	32180-089	1	Cap-Plug, 3 Way
1:18	32180-043	1	Resistor-120 Ohm
1:19	32180-156	2	Cap-Plug, 6 Way
1:20	104-4022	1	Resistor-75 Ohm
2	106-5187	1	Battery, 525 CCA W/O Electrolyte
3	138-6335	1	Retainer-Battery
4	3231-29	1	Screw-CARR
5	104-8301	1	Nut-HF, NI
6	138-7467-0P	1	Bracket-Electrical
7	99-7430	3	Relay-Mini
8	99-7435	2	Relay
9	42862	1	Block-Terminal, Ground
10	99-3441	1	Harness-Wire, Fusible Link
11	3256-21	1	Washer-Flat
12	125-8067	1	Plug-Plastic
13	42863	1	Strip-Jumper
14	100-5552	1	Harness-Wire
15	122-1276	1	Cable-Battery, Negative ASM

Ref.	Part Number	Qty.	Description
15:1	32180-115	1	Panduit, Cable Tie ●
15:10		1	Bolt ASM ● ■
15:10:1	32180-107	1	Bolt-Clamp, Battery
15:10:2	32180-108	2	Nut-Clamp, Battery
16	140-9010	1	Battery Cover ASM
16:2	140-9033	1	Knob-Stud
16:3	32115-15	1	Nut-Push
16:4	3256-22	1	Washer-Flat
17	117-2382	10	Plug-Plastic
18	122-1275	1	Cable-Battery, Positive ASM
18:1	32180-115	1	Panduit, Cable Tie ●
18:8		1	Bolt ASM ● ■
18:8:1	32180-107	1	Bolt-Clamp, Battery
18:8:2	32180-108	2	Nut-Clamp, Battery
19	33095-00	1	Washer-Flat
20	33115-020	1	Screw-HH
22	3253-4	1	Washer-Lock
23	33014-00	1	Nut-Hex
24	3290-378	2	Tie-Cable
25	33003-00	1	Nut-HF
26	3290-379	1	Tie-Cable
27	32180-149	1	Tie-Button Head
28	3234-29	1	Screw-HHF
29	120-9683	1	Washer-Plain
30	104-8300	1	Nut-HF, NI

● Not illustrated

■ Not serviced separately

Cylinder Block Assembly

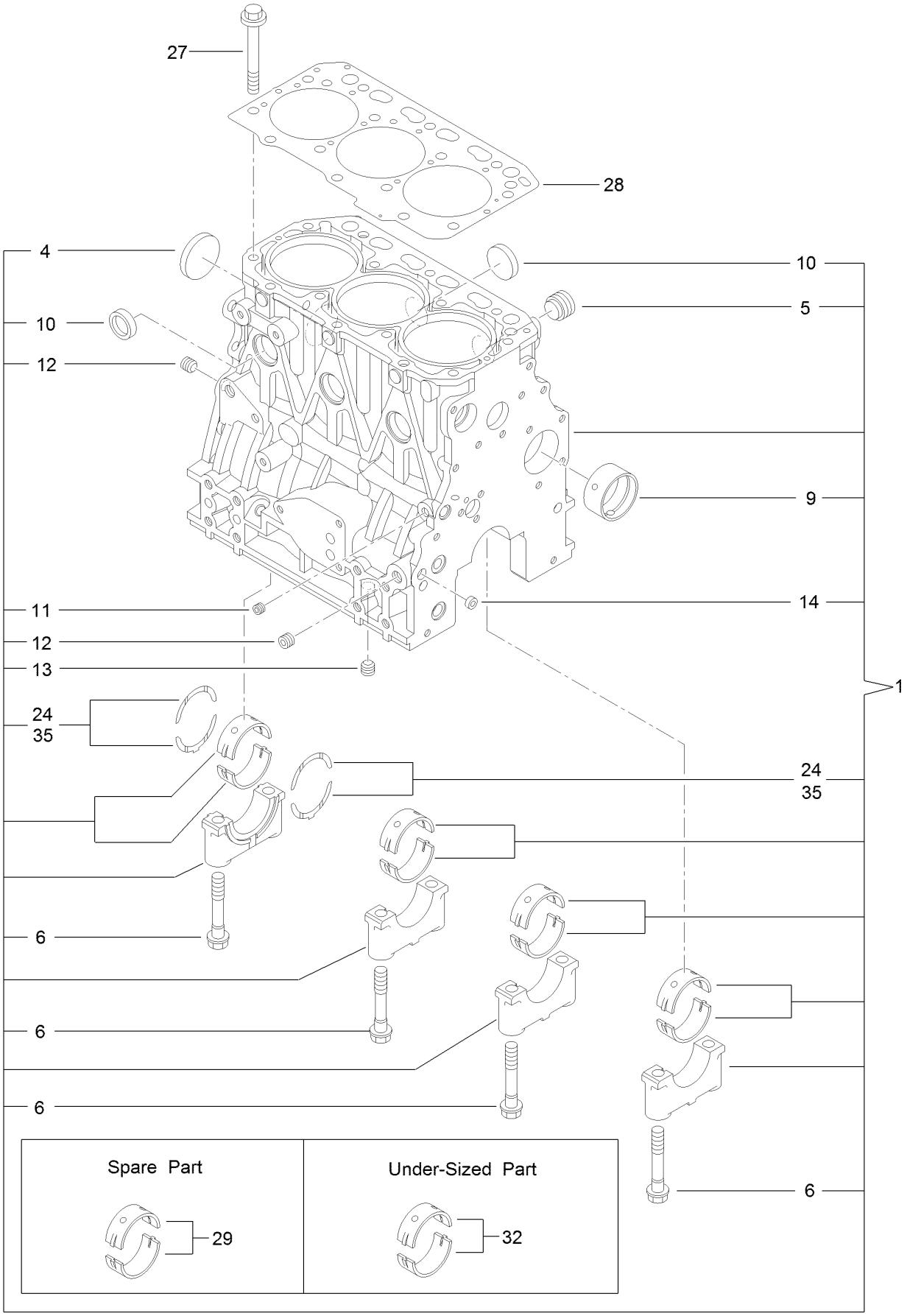

Cylinder Block Assembly (continued)

Ref.	Part Number	Qty.	Description
1	127-4717	1	Cylinder Block ASM
4	125-6980	1	Plug
5	125-7170	1	Plug
6	125-7007	8	Bolt
9	125-7108	1	Bushing
10	140-7182	6	Plug 30
11	125-6969	1	Plug
12	125-6973	2	Plug
13	125-6973	1	Plug
14	125-7237	1	Plug
24	125-7010	2	Metal-Thrust
27	125-7006	14	Bolt
28	127-4716	1	Head Gasket ASM
29	125-6981	4	Metal-Main
32	125-7009	4	Metal-Main (0.25)
35	125-7011	1	Metal-Thrust (0.25)

Gear Housing Assembly

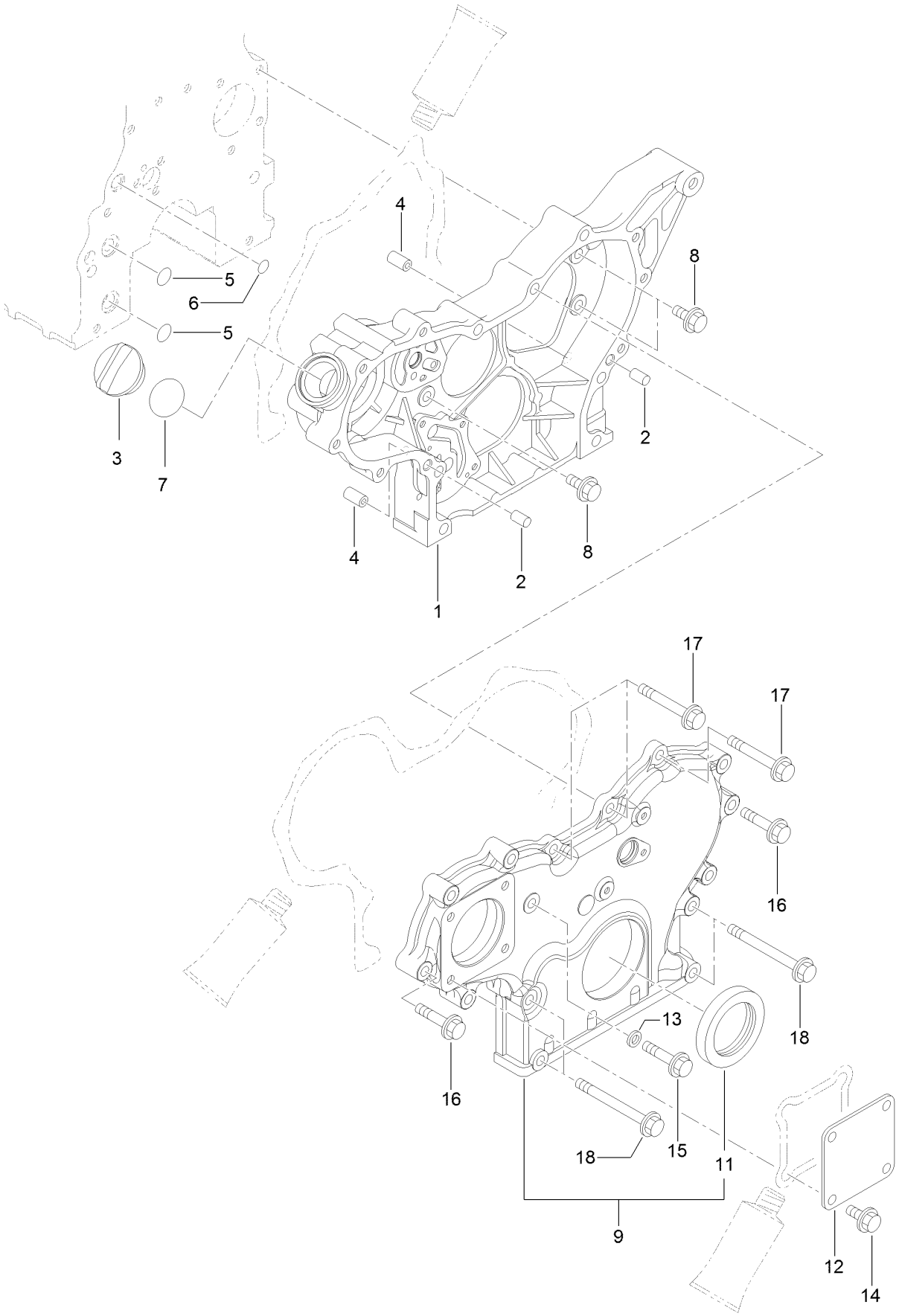

Gear Housing Assembly (continued)

Ref.	Part Number	Qty.	Description
1	127-3023	1	Case-Gear
2	125-6995	2	Pin
3	125-6972	1	Cover-Filler
4	125-7107	2	Pipe
5	125-6909	2	O-Ring
6	127-2973	1	O-Ring
7	125-7197	1	O-Ring
8	125-7214	3	Bolt
9	127-3024	1	Gearcase Cover ASM
11	125-6944	1	Seal-Oil
12	125-6977	1	Cover
13	125-7174	1	Washer-Seal
14	125-7214	4	Bolt
15	125-7217	1	Bolt
16	125-7218	7	Bolt
17	125-7222	3	Bolt
18	125-7224	4	Bolt

Flywheel Housing and Oil Sump Assembly

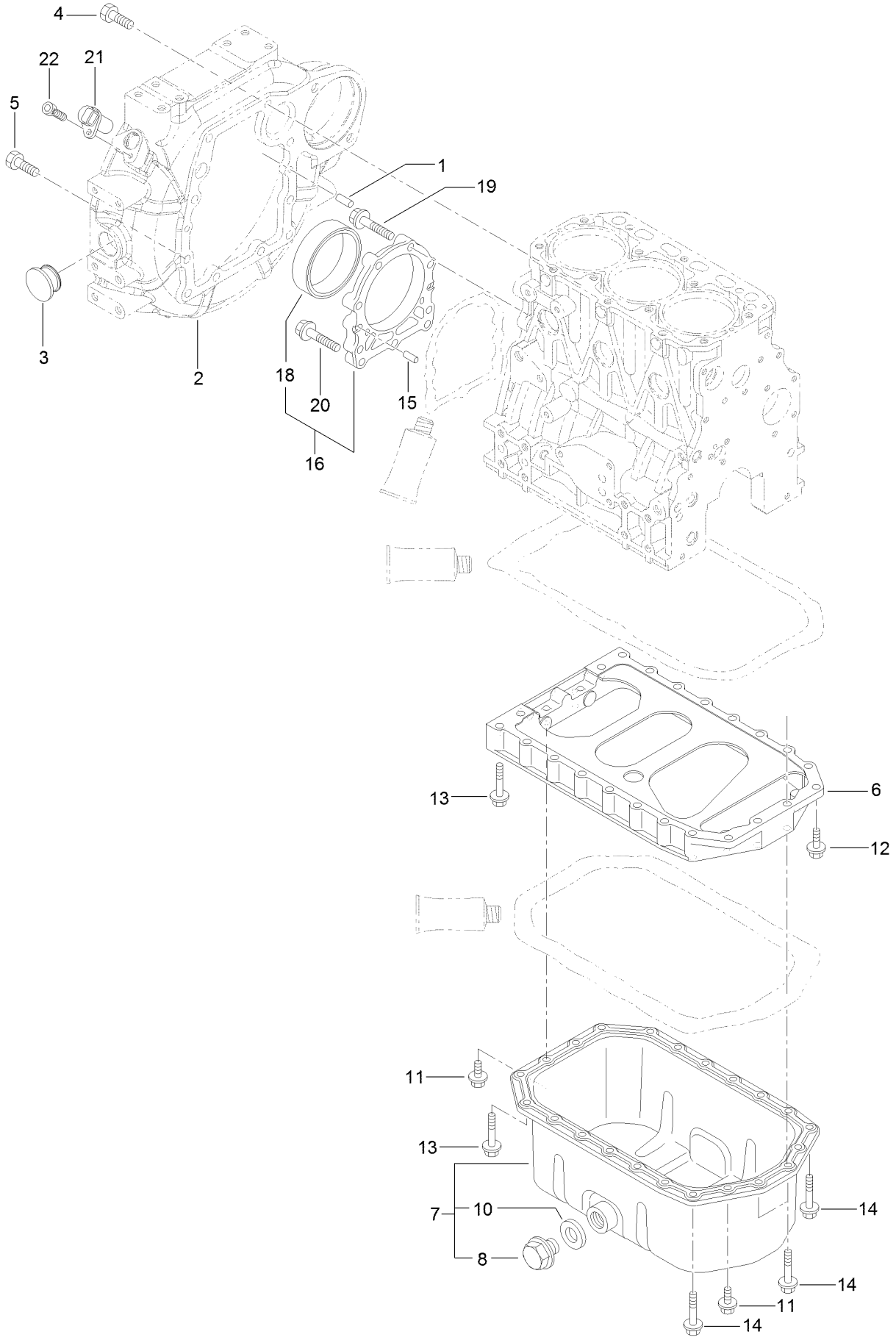

Flywheel Housing and Oil Sump Assembly (continued)

Ref.	Part Number	Qty.	Description
1	125-6995	2	Pin
2	127-3025	1	Housing-Flywheel
3	125-6910	1	Cap
4	125-7226	6	Bolt
5	125-7227	4	Bolt
6	127-3756	1	Spacer
7	135-4010	1	Oil Pan ASM
8	125-6912	1	Plug-Drain
10	125-7177	1	Washer-Seal
11	125-7214	4	Bolt
12	125-7215	2	Bolt
13	125-7219	16	Bolt
14	125-7220	4	Bolt
15	125-6995	2	Pin
16	140-7173	1	Oil Seal Case ASM
18	140-7174	1	Seal-Oil
19	125-7045	6	Bolt
20	125-7217	3	Bolt
21	127-3062	1	Sensor-Rev, Flywheel
22	127-3184	1	Bolt

Cylinder Head and Cover Assembly

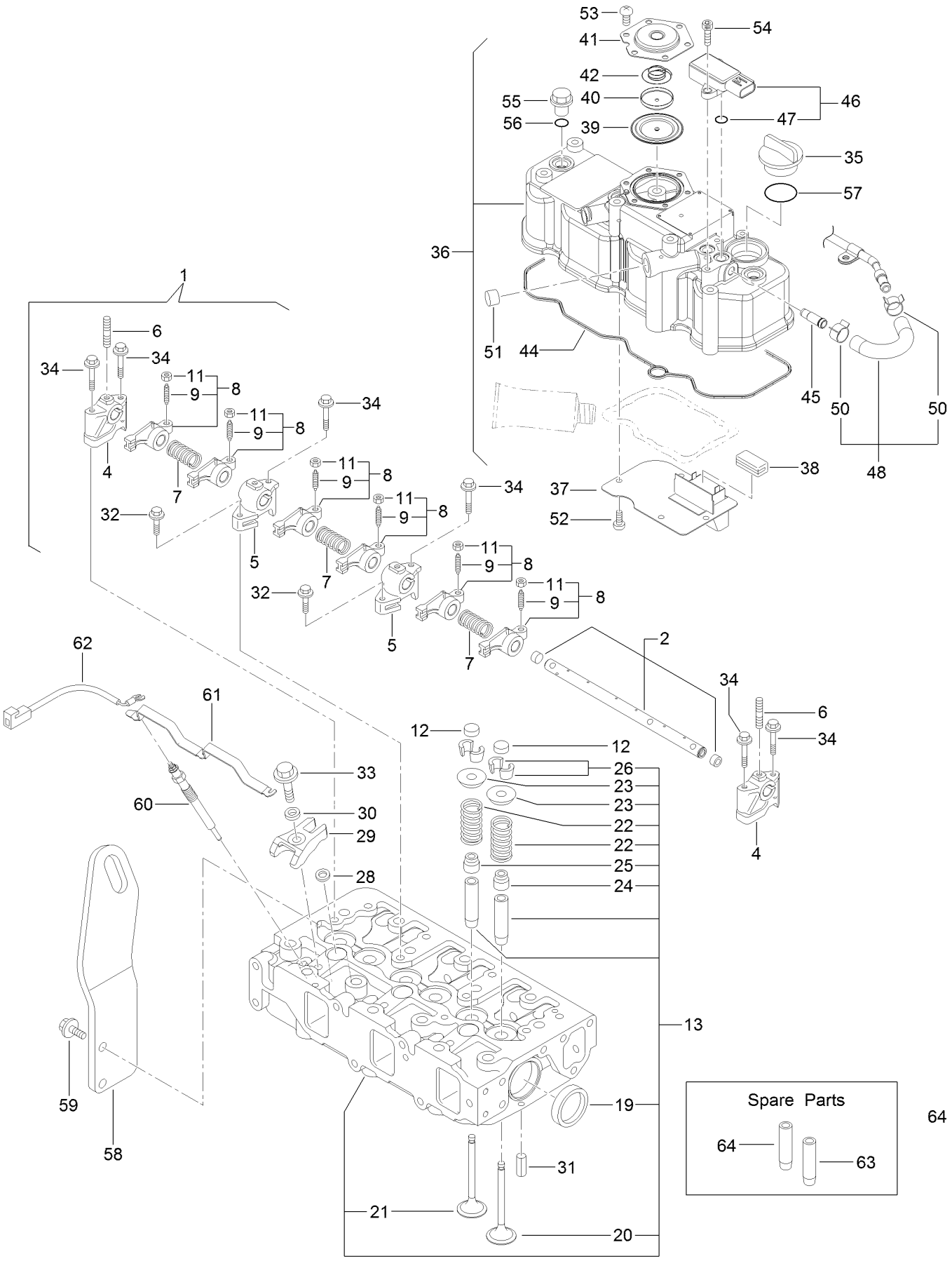

Cylinder Head and Cover Assembly (continued)

Ref.	Part Number	Qty.	Description
1	127-3757	1	Shaft ASM
2	127-3758	1	Shaft
4	127-2974	2	Support
5	127-2975	2	Support
6	135-4012	3	Bolt,Stud
7	127-2995	3	Spring
8	127-2989	6	Arm-Rocker
9	125-7013	6	Screw-Adjust, Valve
11	125-7014	6	Nut
12	127-2996	6	Cap-Valve
13	139-6014	1	Cylinder Head ASM
19	125-7240	2	Plug
20	127-2990	3	Valve
21	127-4710	3	Valve
22	127-3012	6	Spring
23	127-3013	6	Retainer-Spring
24	127-2986	3	Seal-Stem, Valve
25	127-3027	3	Seal-Stem, Valve
26	127-3186	6	Pin-Cotter
28	127-3021	3	Gasket-Injector
29	127-3028	3	Retainer-Injector
30	127-2980	3	Washer-Injector
31	125-7184	2	Pin-Spring
32	125-7215	2	Bolt
33	125-7217	3	Bolt
34	125-7220	6	Bolt
35	125-6972	1	Cover-Filler
36	127-4719	1	Cylinder Head Cover ASM
37	127-2988	1	Plate
38	125-7012	1	Baffle
39	125-6959	1	Diaphragm
40	125-6960	1	Plate
41	125-6961	1	Plate-Breather
42	125-6962	1	Spring-Diaphragm
44	127-3762	1	Gasket-Cover, Cylinder Head
45	127-3026	1	Joint
46	127-3029	1	Sensor-Pressure
47	127-3032	2	O Ring-Sensor, Pressure
48	127-3040	1	Hose ASM
50	127-3041	2	Clip-Hose
51	125-6913	1	Plug
52	125-7186	4	Screw
53	125-7186	6	Screw
54	127-3184	2	Bolt
55	125-6974	3	Knob
56	138-7829	3	O-Ring
57	125-7197	1	O-Ring
58	127-4718	1	Lifter-Engine
59	125-7595	2	Bolt
60	127-2991	3	Plug-Glow
61	127-3768	1	Connector-Plug, Glow
62	131-2704	1	Harness-Wire
63	127-2979	3	Guide
64	127-2997	3	Guide-Valve

Suction Manifold Assembly

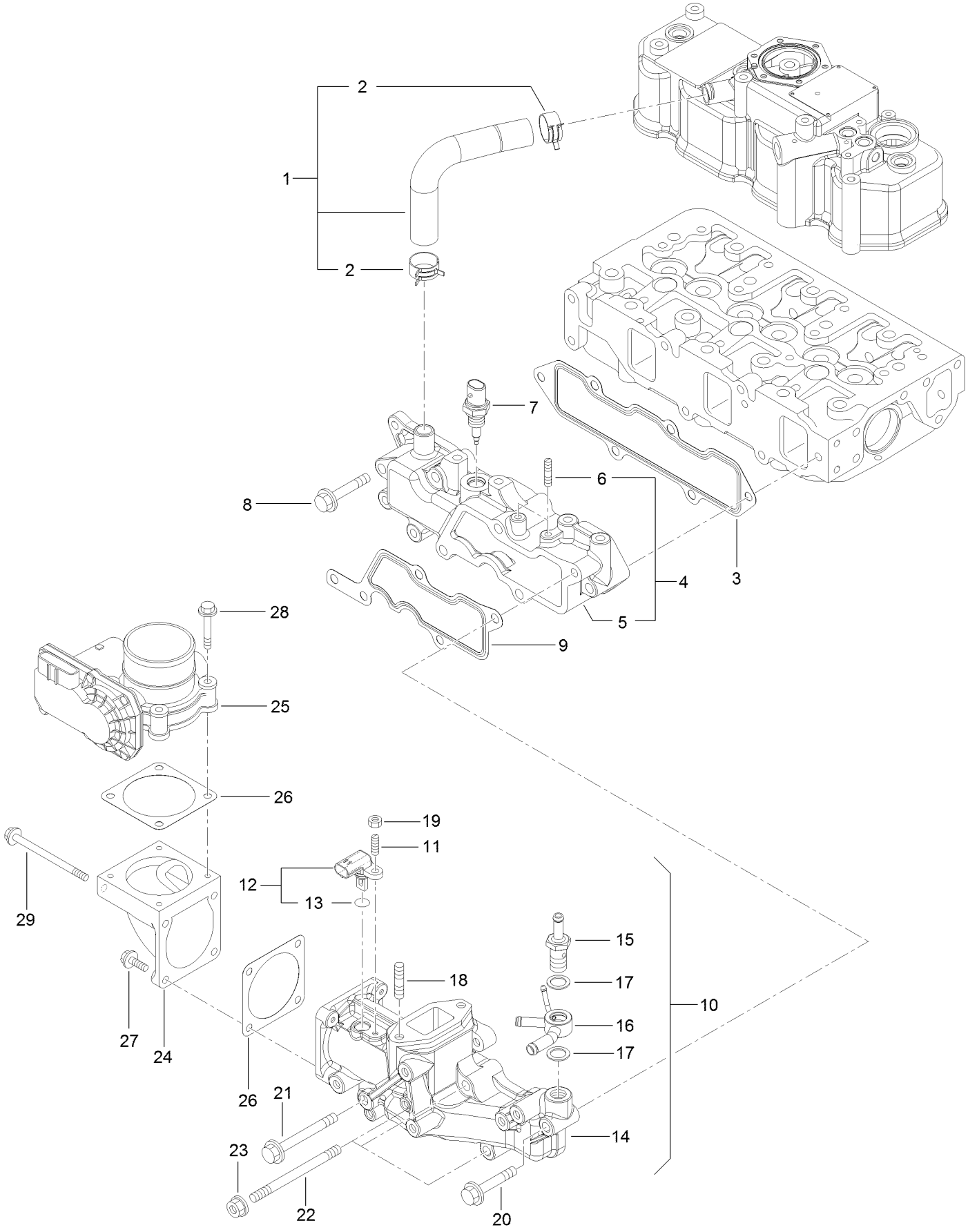

Suction Manifold Assembly (continued)

Ref.	Part Number	Qty.	Description
1	127-4704	1	Pipe
2	125-7040	2	Clip-Hose
3	127-3769	1	Gasket-Manifold, Intake
4	127-4722	1	Intake Manifold ASM
5	127-4721	1	Manifold-Intake
6	127-3180	2	Stud
7	137-5167	1	Sensor-Temperature, Air
8	125-7220	3	Bolt
9	127-3034	1	Gasket-Collector
10	127-4725	1	Intake Collector ASM
11	127-4701	1	Stud
12	127-3030	1	Sensor-Temp, Air
13	127-3033	1	O-Ring
14	127-4724	1	Collector-Intake
15	127-3080	1	Joint-Hose
16	127-3081	1	Joint-Hose
17	127-3166	2	Washer-Seal
18	127-3181	2	Stud
19	127-4775	1	Nut
20	125-7220	1	Bolt
21	127-3178	1	Bolt
22	127-3182	3	Stud
23	125-7229	3	Nut
24	127-3035	1	Bend-Inlet
25	127-3036	1	Body-Throttle
26	127-3037	2	Gasket-Throttle
27	125-7209	2	Bolt
28	125-7211	4	Bolt
29	127-3177	2	Bolt

Exhaust Manifold Assembly

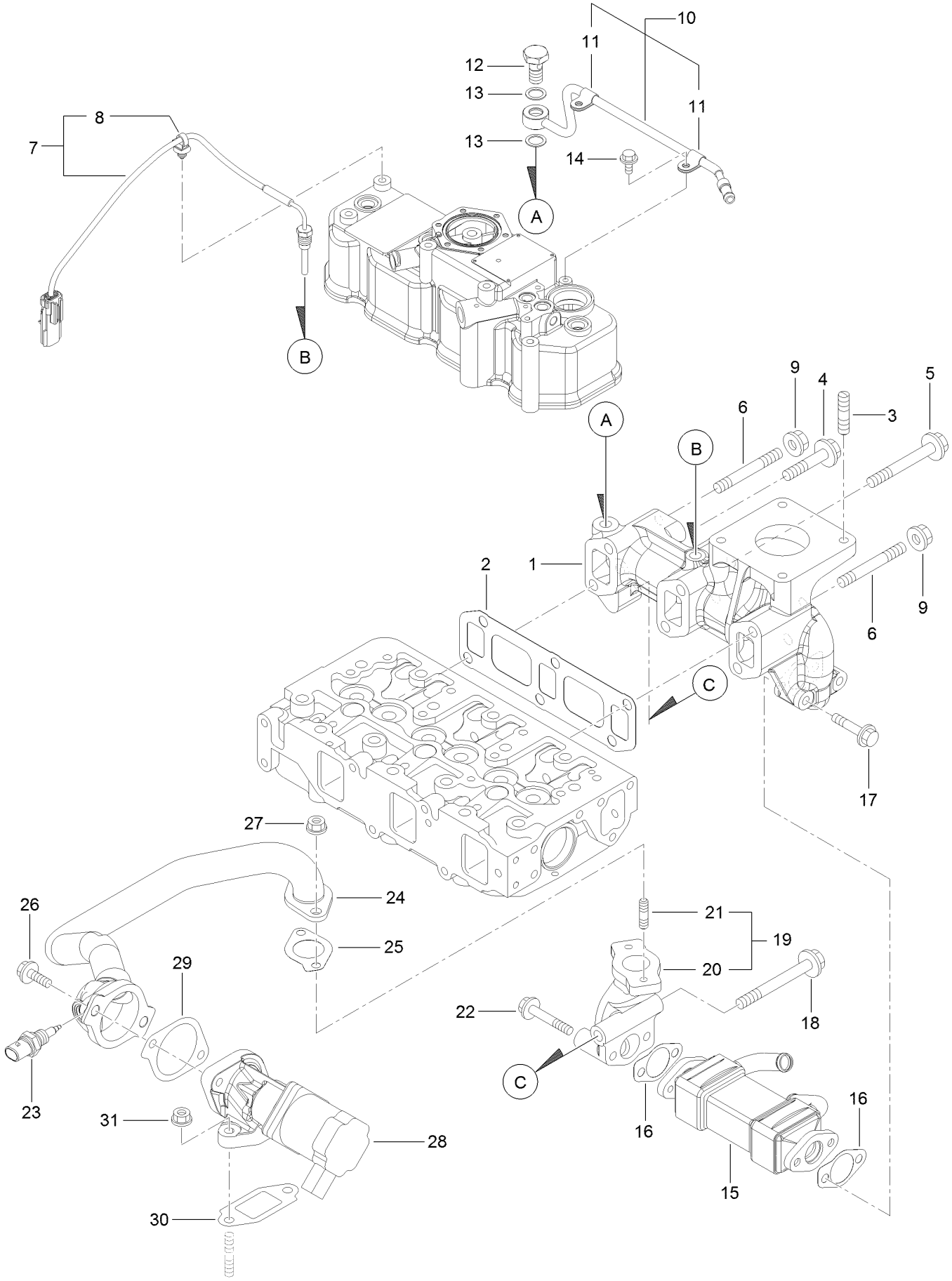

Exhaust Manifold Assembly (continued)

Ref.	Part Number	Qty.	Description
1	127-4726	1	Manifold-Exhaust
2	127-3775	1	Gasket-Manifold, Exhaust
3	127-2984	4	Stud
4	135-4013	1	Bolt
5	135-4014	3	Bolt
6	127-4756	2	Stud
7	127-4729	1	Sensor-Temp, Exhaust
8	127-3087	1	Band-Clip
9	125-7230	2	Nut
10	127-3038	1	Exhaust Pipe ASM
11	127-3173	2	Clamp
12	127-3039	1	Bolt-Joint, Pipe
13	127-3174	2	Gasket
14	125-7206	2	Bolt
15	127-3042	1	Cooler-E G R
16	127-3043	2	Gasket-Cooler, E G R
17	133-6715	2	Bolt
18	127-3022	1	Bolt-Flange
19	127-3048	1	E G R Pipe ASM
20	127-3049	1	Pipe-Out, E G R
21	125-7043	2	Stud
22	125-7220	2	Bolt
23	137-5168	1	Sensor-Gas Temp, E G R
24	127-3780	1	E G R Pipe ASM
25	127-3016	1	Gasket
26	125-7215	2	Bolt
27	125-7229	2	Nut
28	127-3781	1	Valve-E G R
29	127-3050	1	Gasket-Intake Valve, E G R
30	127-3051	1	Gasket-Out Valve, E G R
31	125-7229	2	Nut

Diesel Particulate Filter Assembly

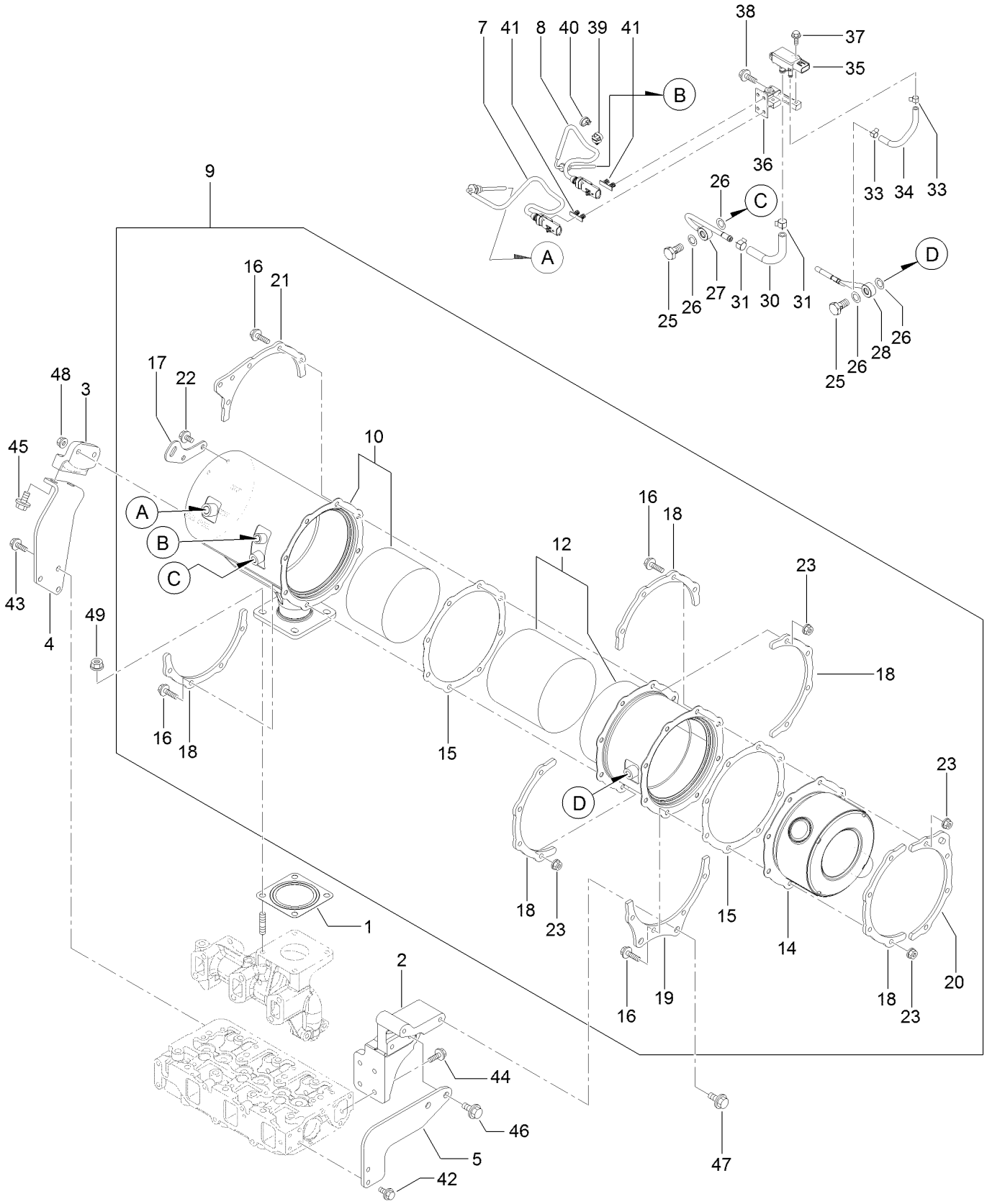

Diesel Particulate Filter Assembly (continued)

Ref.	Part Number	Qty.	Description
1	127-2987	1	Gasket-Silencer
2	127-4738	1	Stay-D P F
3	127-4739	1	Stay-D P F
4	127-4740	1	Stay-D P F
5	127-4741	1	Stay-D P F
7	127-4764	1	Sensor-Temp, Exhaust
8	127-3112	1	Sensor-Temp, Exhaust
9	127-4759	1	D P F ASM
10	127-4732	1	Case-D O C
12	127-4734	1	Case-Filter, Soot
14	127-3786	1	Silencer-D P F
15	127-3787	2	Gasket-D P F
16	127-3055	16	Bolt
17	127-3788	1	Lifter-D P F
18	127-3789	5	Stiffener-D P F, A
19	127-4735	1	Stiffener-D P F, B
20	127-3792	1	Stiffener-D P F, C
21	127-4736	1	Stiffener-D P F, C
22	125-7213	2	Bolt
23	125-7229	16	Nut
25	127-3039	2	Bolt-Joint, Pipe
26	127-3056	4	Gasket-Sensor

Ref.	Part Number	Qty.	Description
27	127-4744	1	Sensor Pipe ASM
28	127-4745	1	Sensor Pipe ASM
30	140-7175	1	Hose-Pressure
31	127-3057	2	Clip-Hose
33	127-3058	2	Clip-Hose
34	138-8257	1	Exhaust Press Hose ASM
35	127-3060	1	Sensor-Pressure
36	127-4750	1	Bracket-Sensor
37	125-7208	2	Bolt
38	125-7595	2	Bolt
39	127-3087	1	Band-Clip
40	127-3124	1	Band
41	127-3088	2	Clip-Connnector
42	125-7214	2	Bolt
43	125-7214	3	Bolt
44	125-7595	4	Bolt
45	127-3179	2	Bolt
46	127-3179	2	Bolt
47	127-3179	2	Bolt
48	125-7229	2	Nut
49	125-7230	4	Nut

Camshaft and Driving Gear Assembly

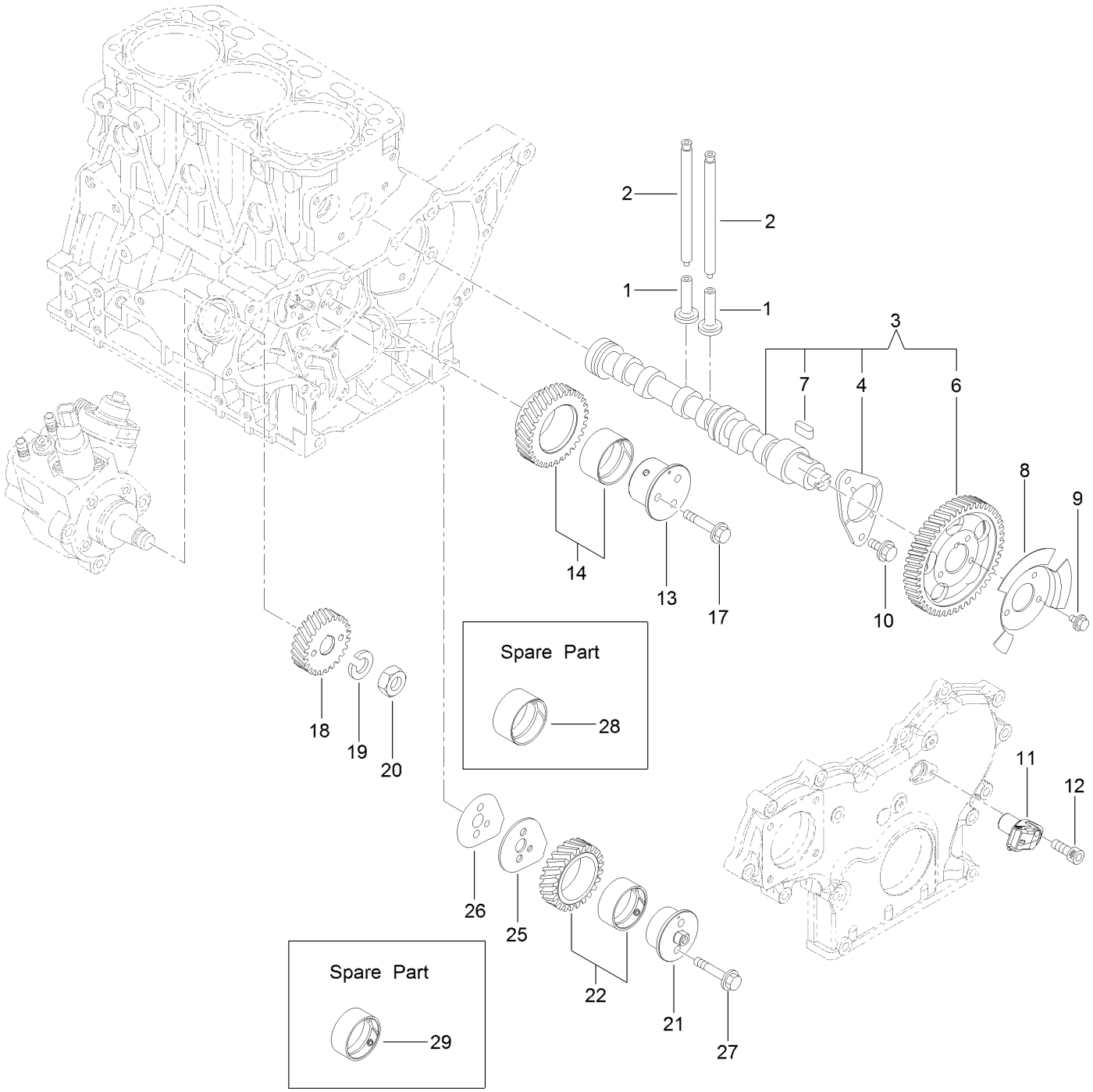

Camshaft and Driving Gear Assembly (continued)

Ref.	Part Number	Qty.	Description
1	125-7016	6	Tappet
2	125-7017	6	Rod-Push
3	127-3797	1	Camshaft ASM
4	125-7008	1	Metal-Thrust
6	127-3052	1	Gear-Camshaft
7	125-7185	1	Key
8	127-3053	1	Pulser-Camshaft
9	125-7205	3	Bolt
10	125-7213	2	Bolt
11	127-3054	1	Sensor-Rev, Gear
12	127-3184	1	Bolt
13	127-3063	1	Shaft-Idle, Gear A
14	127-3066	1	Idle Gear A ASM
17	125-7219	3	Bolt
18	127-3070	1	Gear-Pump, Supply
19	127-3167	1	Washer-Spring
20	127-3185	1	Nut-Lock
21	127-3064	1	Shaft-Idle, Gear B
22	127-3067	1	Idle Gear B ASM
25	127-3068	1	Plate-Idle, Shaft
26	127-3069	1	Gasket-Idle, Shaft B
27	125-7218	2	Bolt
28	125-6926	1	Bush
29	127-3065	1	Bushing

Crankshaft and Piston Assembly

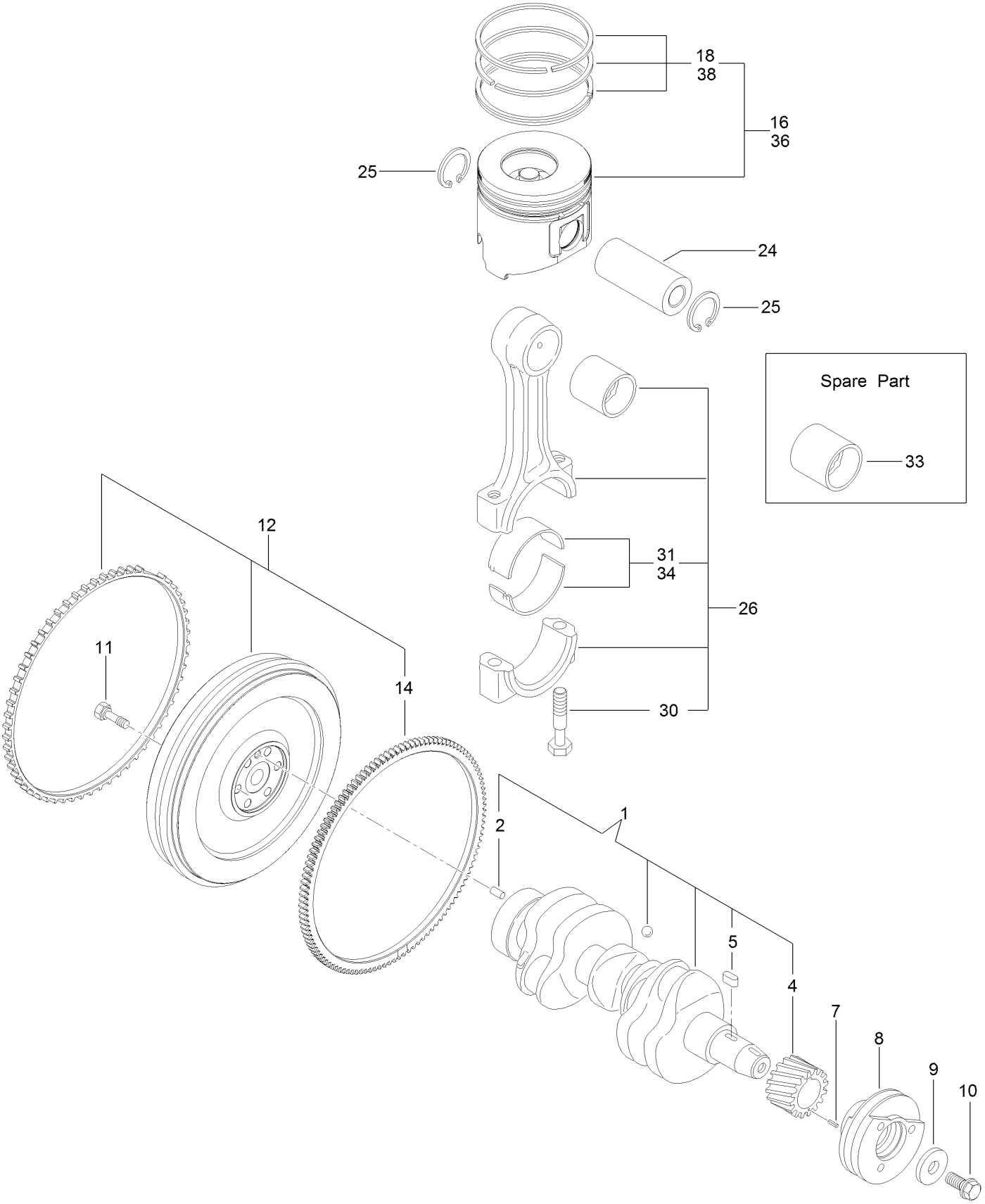

Crankshaft and Piston Assembly (continued)

Ref.	Part Number	Qty.	Description
1	127-3800	1	Crankshaft ASM
2	125-6995	1	Pin
4	125-6937	1	Gear
5	125-7185	1	Key
7	125-7182	1	Pin-Spring
8	127-3801	1	Pulley-V
9	125-7109	1	Washer
10	125-6956	1	Bolt
11	125-6951	6	Bolt
12	127-3802	1	Flywheel ASM
14	125-6943	1	Gear

Ref.	Part Number	Qty.	Description
16	127-4766	3	Piston ASM
18	127-4751	3	Piston Ring ASM
24	125-7030	3	Pin
25	125-7180	6	Ring
26	125-7242	3	Connecting Rod ASM
30	125-6955	6	Bolt
31	125-7018	3	Pin-Crank
33	125-6997	3	Pin-Piston
34	125-7019	3	Pin-Crank (.25)
36	127-4767	3	Piston ASM (0.25 O S)
38	127-4752	3	Ring Set (0.25 O S)

Lubrication and Oil System Assembly

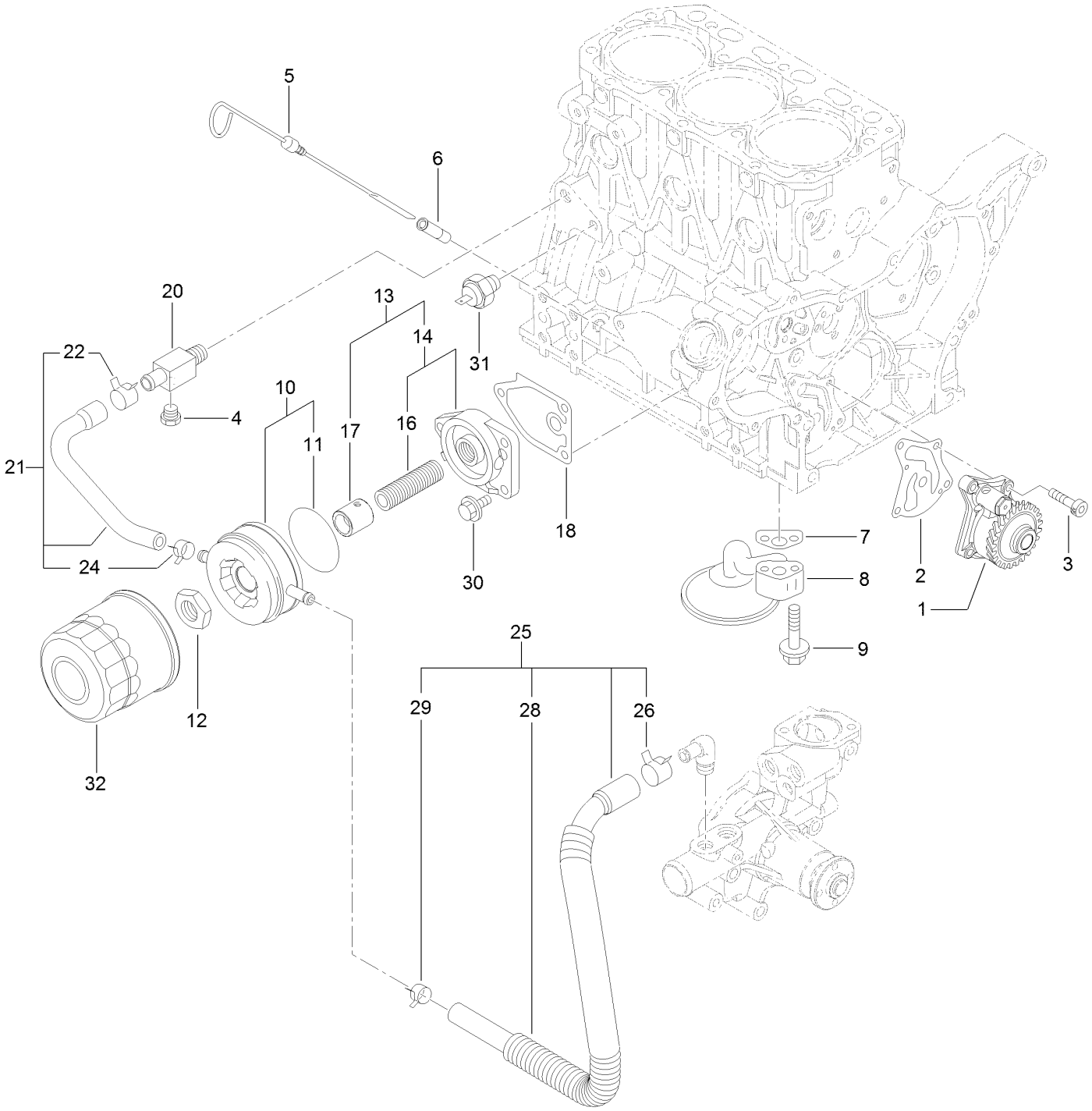

Lubrication and Oil System Assembly (continued)

Ref.	Part Number	Qty.	Description
1	127-4753	1	Oil Pump ASM
2	127-3004	1	Gasket
3	125-7232	4	Bolt
4	125-7171	1	Plug-Drain
5	140-7168	1	Dipstick-Oil
6	125-6954	1	Guide-Dipstick
7	125-7022	1	Gasket
8	135-4017	1	Oil Inlet Pipe ASM
9	125-7217	2	Bolt
10	135-4018	1	Oil Cooler ASM
11	135-4019	1	Packing-Oil Cooler
12	135-4020	1	Nut
13	135-4021	1	Lo Filter Bracket ASM
14	140-7169	1	Filter Bracket ASM

Ref.	Part Number	Qty.	Description
16	125-7042	1	Stud
17	135-4022	1	Collar-Cooler, Oil
18	125-7024	1	Gasket
20	125-6990	1	Joint
21	125-7078	1	Pipe ASM
22	125-7162	1	Clip
24	125-7191	1	Clamp-Hose
25	127-3804	1	Pipe ASM
26	125-7162	1	Clip
28	127-3805	1	Tube
29	125-7191	1	Clamp-Hose
30	125-7595	3	Bolt
31	125-6918	1	Switch-Oil
32	125-7025	1	Filter-Engine, Oil

Cooling Water System Assembly

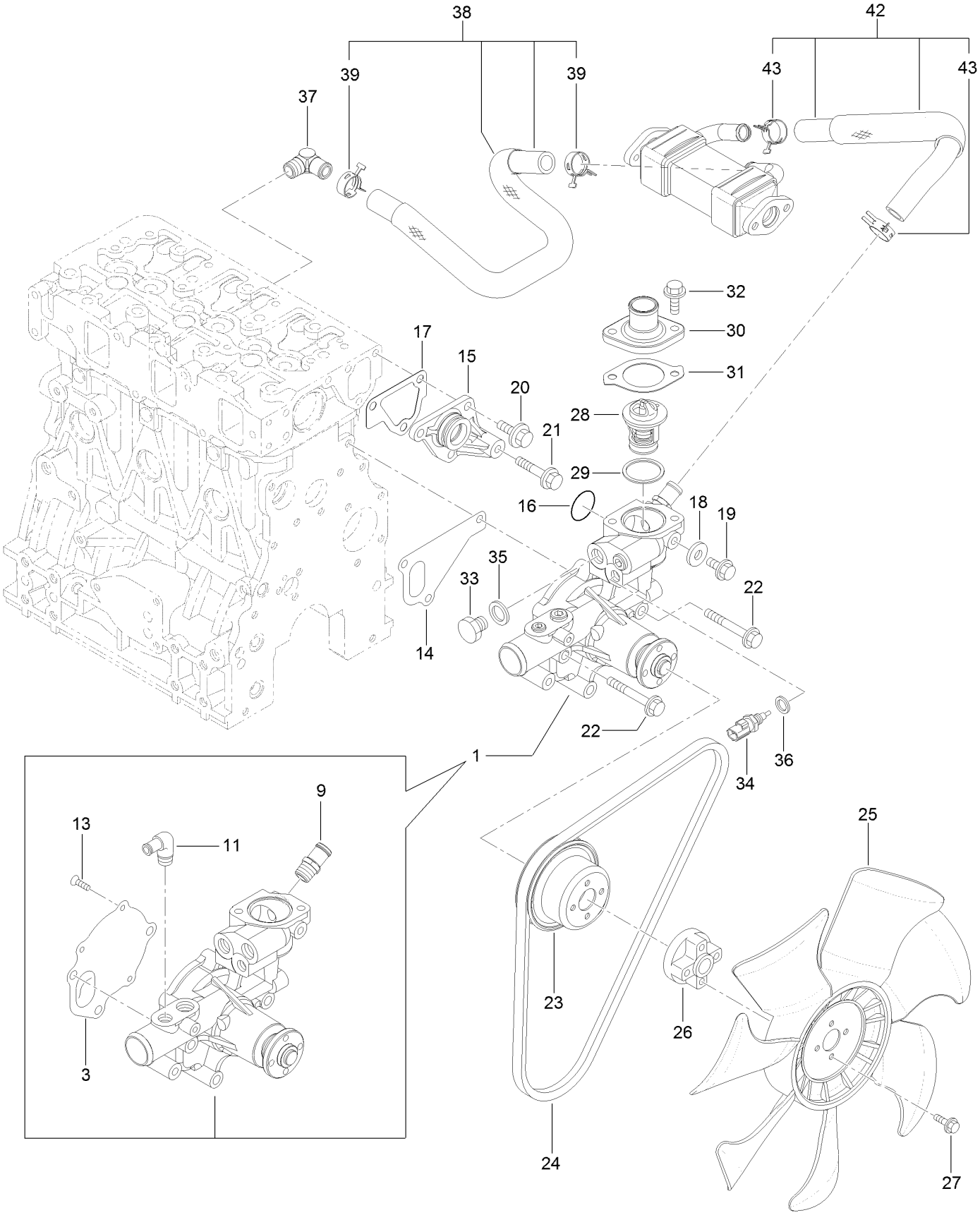

Cooling Water System Assembly (continued)

Ref.	Part Number	Qty.	Description
1	140-7176	1	CW Pump ASM
3	125-6998	1	Gasket
9	127-3017	1	Joint
11	125-7001	1	Elbow
13	140-7170	3	Screw-Flat
14	125-7047	1	Gasket
15	125-6986	1	Joint
16	125-7048	1	O-Ring
17	125-6978	1	Gasket
18	125-7192	1	Gasket
19	125-7212	1	Bolt
20	125-7214	3	Bolt
21	125-7219	1	Bolt
22	125-7222	3	Bolt
23	127-4712	1	V-Pulley
24	127-4771	1	V-Belt
25	127-4702	1	Fan
26	127-3810	1	Spacer
27	125-7209	4	Bolt
28	125-7029	1	Thermostat
29	125-7026	1	Gasket
30	140-7171	1	Cover-Thermostat
31	125-7110	1	Gasket
32	125-7594	2	Bolt
33	125-6953	1	Plug
34	125-7124	1	Sensor-Thermostat, CW
35	125-6979	1	Gasket
36	125-7176	1	Washer-Seal
37	127-4705	1	Elbow
38	127-4757	1	E G R-C Pipe ASM
39	127-3020	2	Clip-Hose
42	127-3811	1	CW Pipe ASM
43	127-3020	2	Clip-Hose

Fuel Supply Pump Assembly

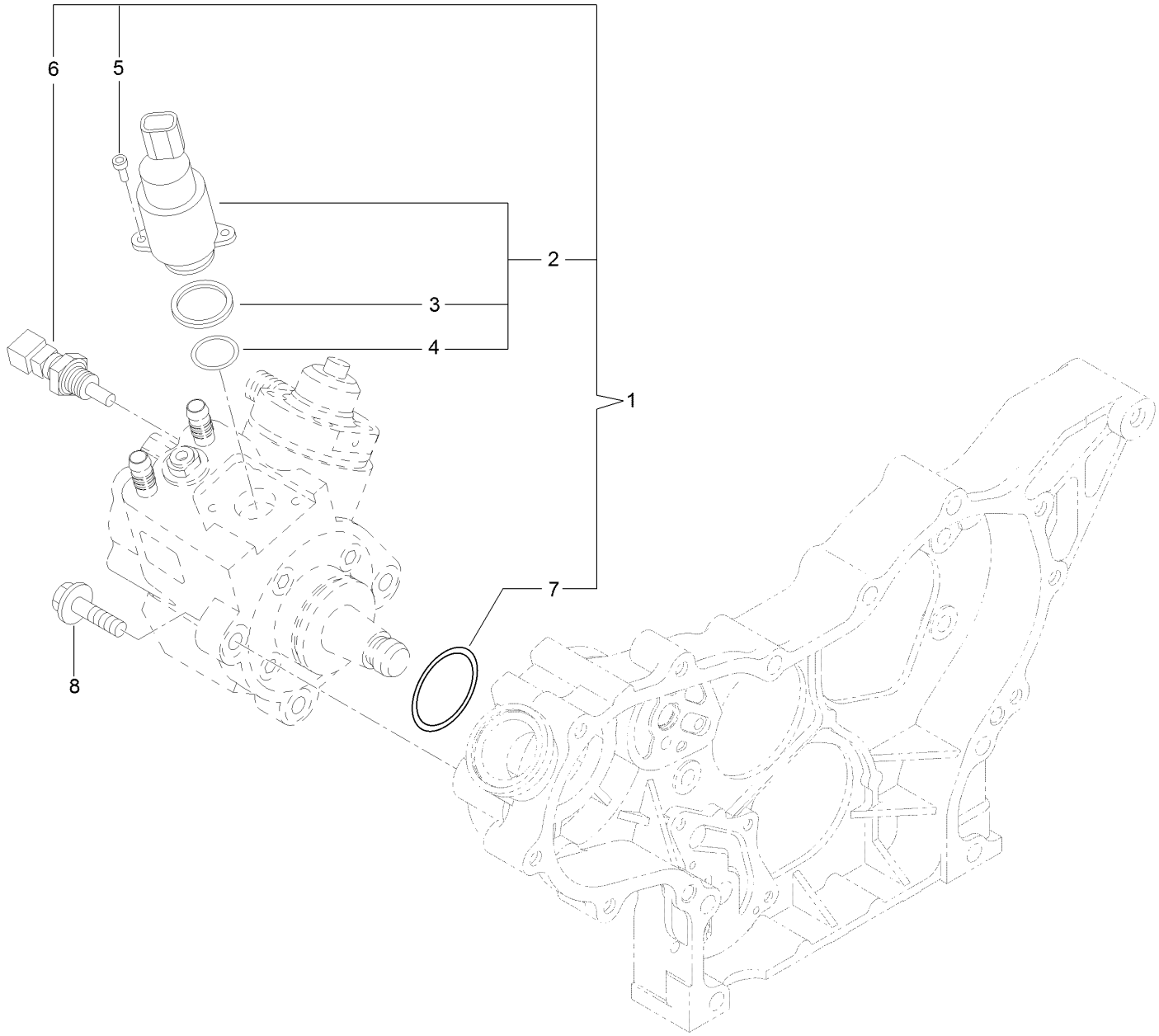

Fuel Supply Pump Assembly (continued)

Ref.	Part Number	Qty.	Description
1	140-7178	1	Fuel Pump ASM
2	131-2103	1	Valve ASM
3	131-2105	1	Ring-Sealing
4	131-2106	1	O-Ring
5	131-2107	2	Bolt
6	131-2108	1	Sensor-Temperature
7	127-3074	1	O-Ring
8	125-7216	3	Bolt

Fuel Injection Valve Assembly

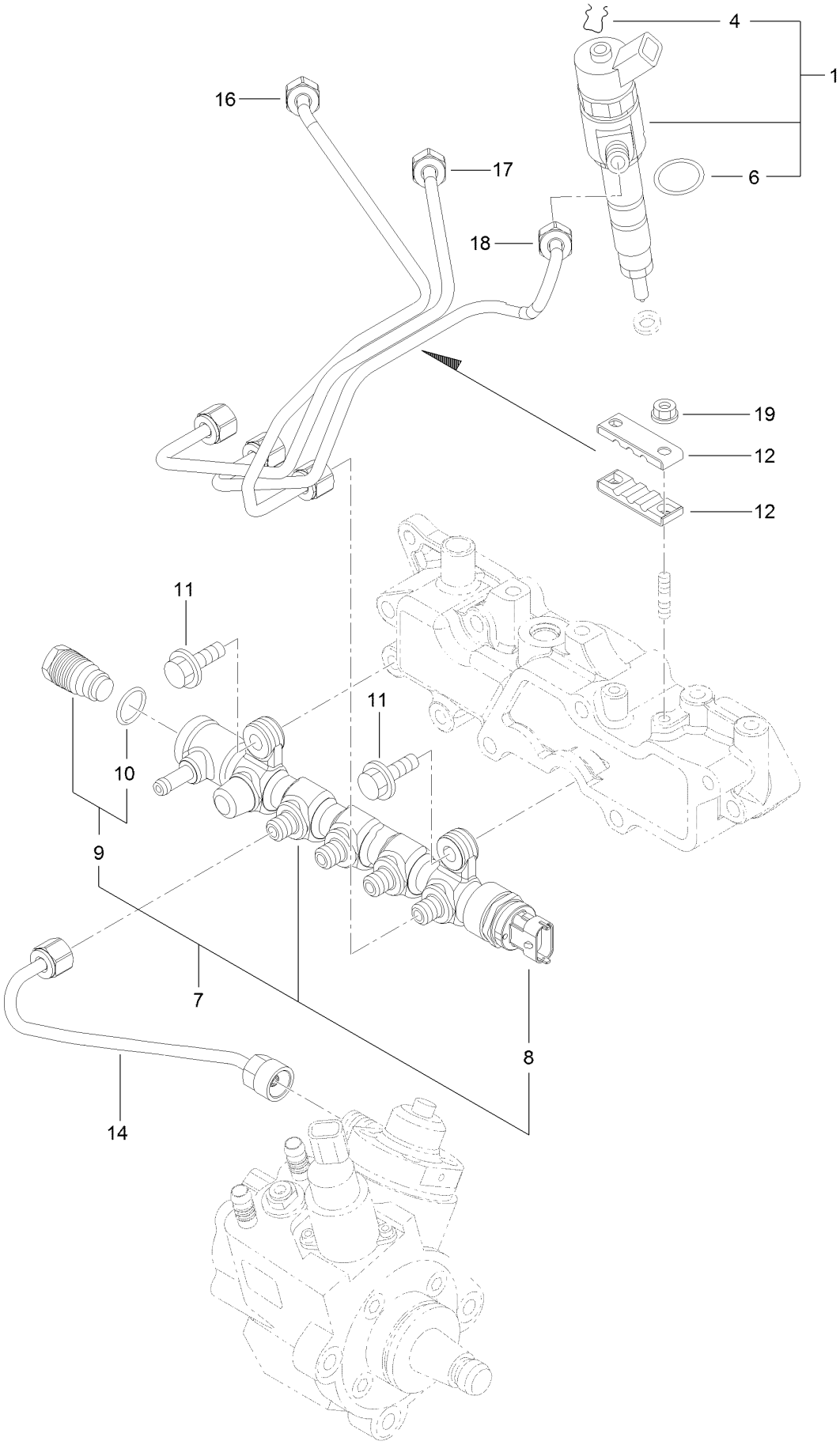

Fuel Injection Valve Assembly (continued)

Ref.	Part Number	Qty.	Description
1	127-4754	3	Injector ASM
4	130-7430	3	Ring-Retaining
6	137-5173	3	O-Ring
7	127-3812	1	Rail ASM
8	131-2709	1	Sensor-Pressure, Rail
9	131-2710	1	Valve ASM
10	130-7433	1	O-Ring
11	125-7215	2	Bolt
12	127-3813	2	Retainer
14	127-3082	1	Rail In Pipe ASM
16	127-3814	1	Injection Pipe ASM
17	127-3083	1	Injection Pipe ASM
18	127-3084	1	Injection Pipe ASM
19	125-7231	2	Nut

Fuel Filter Assembly

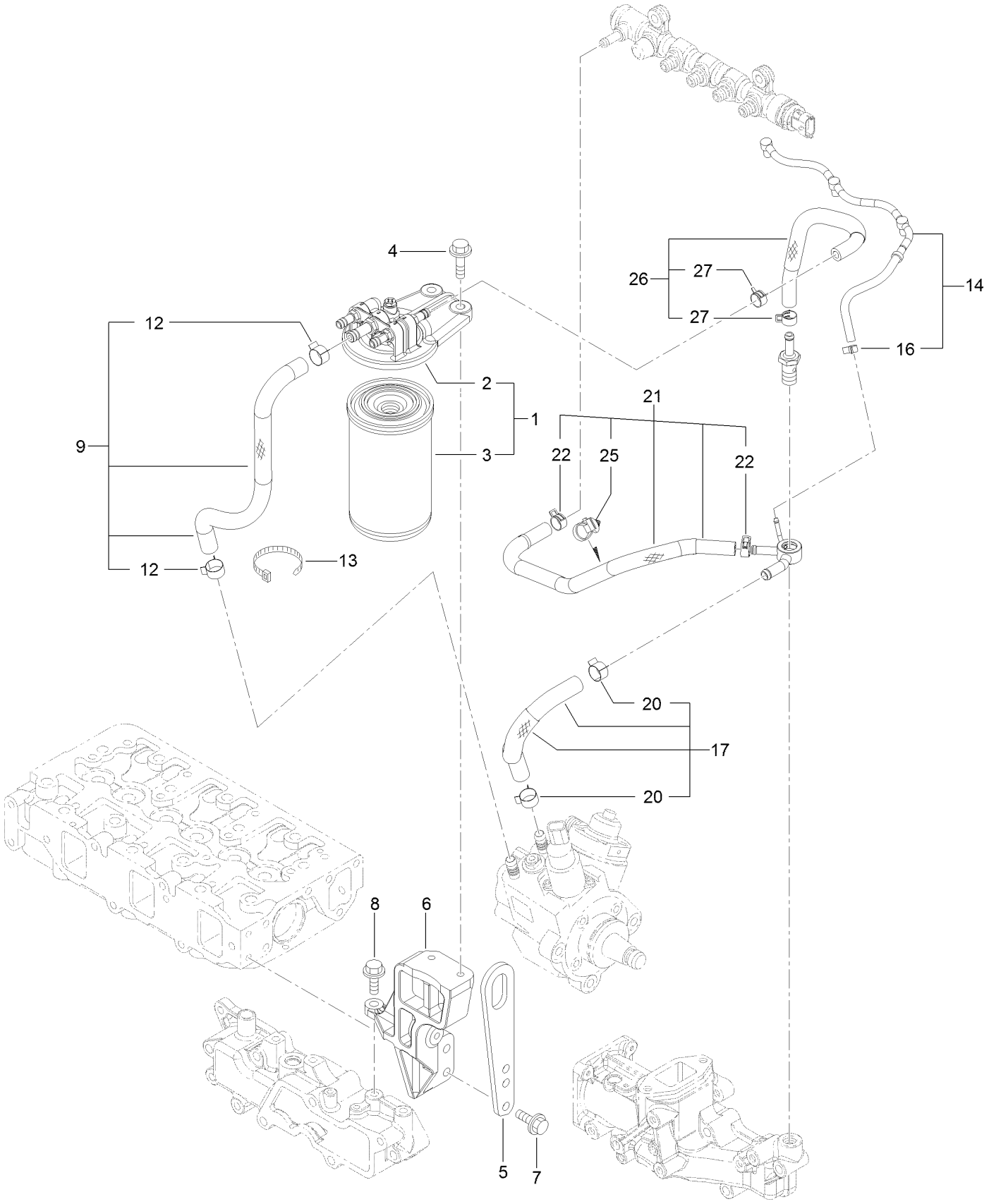

Fuel Filter Assembly (continued)

Ref.	Part Number	Qty.	Description
1	139-4535	1	Filter ASM
2	127-3076	1	Fuel/Oil Filter Bracket ASM
3	139-6017	1	Filter-Fuel
4	125-7216	2	Bolt
5	125-7111	1	Lifter
6	127-3815	1	Filter Bracket ASM
7	125-7215	2	Bolt
8	125-7215	1	Bolt
9	127-3077	1	Fuel Pipe ASM
12	125-7191	2	Clamp-Hose
13	127-2981	1	Band
14	135-4023	1	Fuel/Oil Return Pipe ASM
16	127-3172	1	Clamp-Hose
17	127-3078	1	Fuel Pipe ASM
20	125-7191	2	Clamp-Hose
21	127-3817	1	Fuel Pipe ASM
22	127-2950	2	Clip-Hose
25	127-3087	1	Band-Clip
26	127-3079	1	Fuel Pipe ASM
27	127-2950	2	Clip-Hose

Starting Motor Assembly

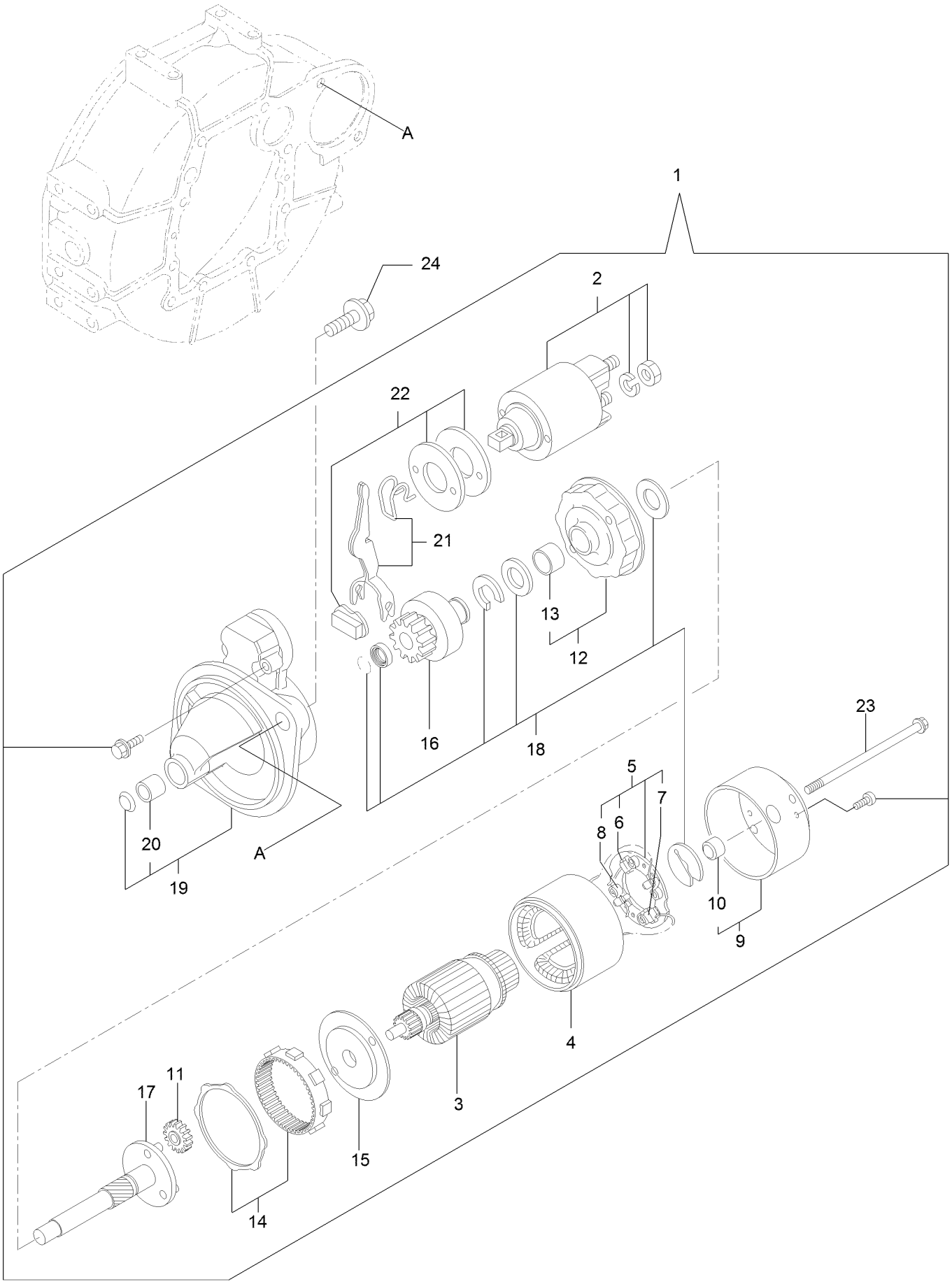

Starting Motor Assembly (continued)

Ref.	Part Number	Qty.	Description
1	127-3818	1	Starter ASM
2	127-3819	1	Switch ASM
3	127-3820	1	Armature ASM
4	127-3821	1	Yoke ASM
5	127-3822	1	Brush Holder ASM
6	127-3823	2	Brush
7	127-3824	1	Brush Set
8	127-3825	4	Spring
9	127-3826	1	Cover ASM
10	127-3827	1	Metal
11	127-3828	3	Gear
12	127-3829	1	Bracket
13	127-3830	1	Bracket
14	127-3831	1	Gear
15	127-3832	1	Bracket
16	127-3833	1	Pinion ASM
17	127-3834	1	Shaft
18	127-3835	1	Washer Set
19	127-3836	1	Case ASM
20	127-3837	1	Metal-Starter
21	127-3838	1	Lever Set
22	127-3839	1	Dust Cover ASM
23	135-4024	2	Bolt-Through
24	125-7225	2	Bolt

Generator Assembly

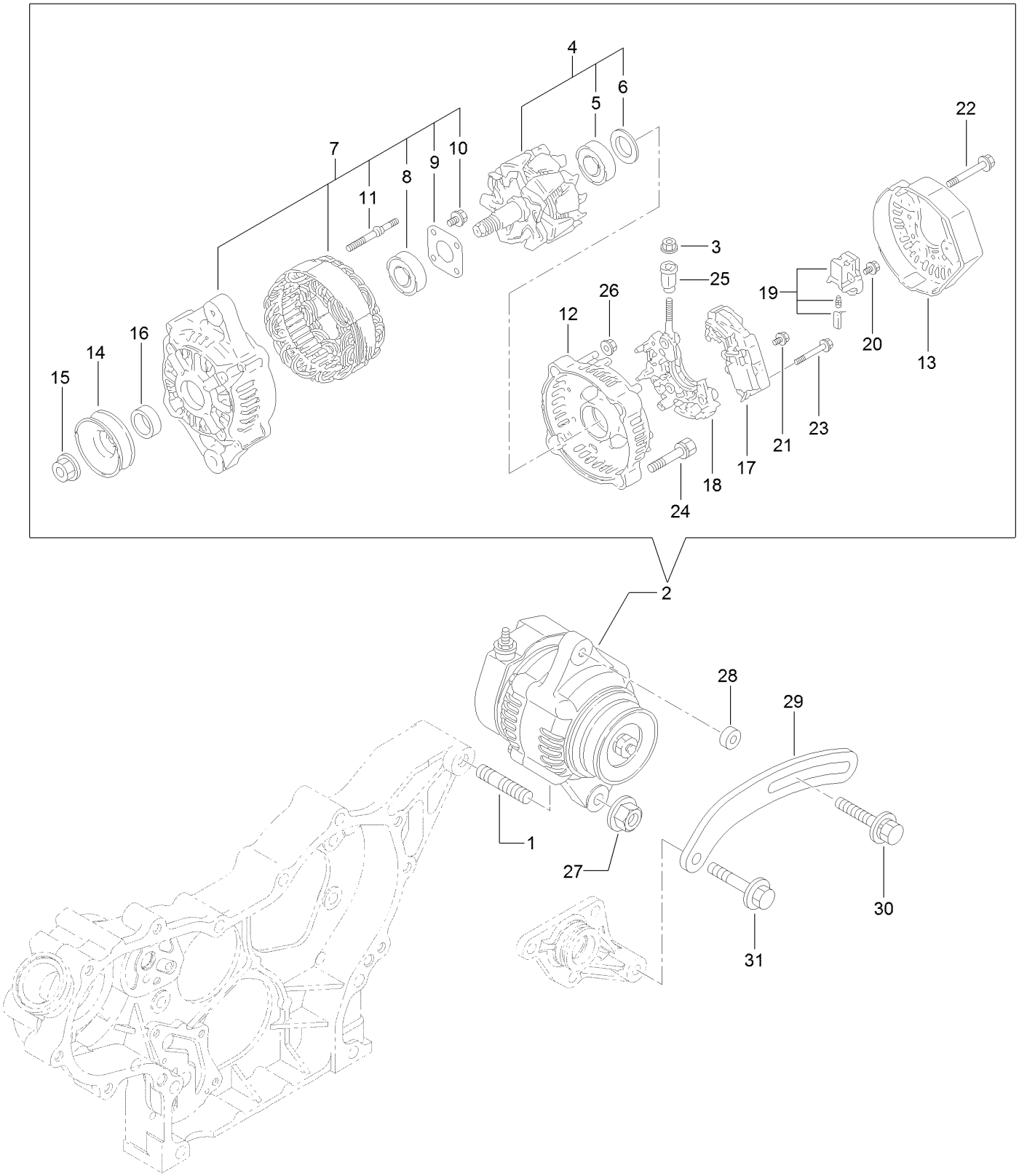

Generator Assembly (continued)

Ref.	Part Number	Qty.	Description
1	127-3011	1	Stud
2	139-6018	1	Generator
3	127-3190	1	Nut
4	127-3843	1	Rotor ASM
5	127-2983	1	Bearing-Ball
6	127-2962	1	Cover
7	135-4025	1	Frame ASM
8	127-2958	1	Bearing-Ball
9	127-2959	1	Plate-Retainer
10	127-2960	4	Screw
11	127-2961	2	Stud
12	127-3845	1	Frame
13	127-3846	1	Cover
14	127-2954	1	Pulley
15	127-2955	1	Nut
16	127-2957	1	Collar
17	135-4026	1	Regulator ASM
18	127-3848	1	Holder
19	127-2993	1	Holder
20	127-2965	6	Screw
21	127-2966	1	Screw
22	127-2967	3	Bolt
23	127-2968	2	Screw
24	127-2969	2	Bolt
25	127-2970	1	Bushing-Insulation
26	127-2971	2	Nut
27	125-7230	1	Nut
28	125-6947	1	Spacer
29	127-2977	1	Adjuster
30	135-4027	1	Bolt-Adjust
31	125-7219	1	Bolt

Electronic Control Unit Assembly

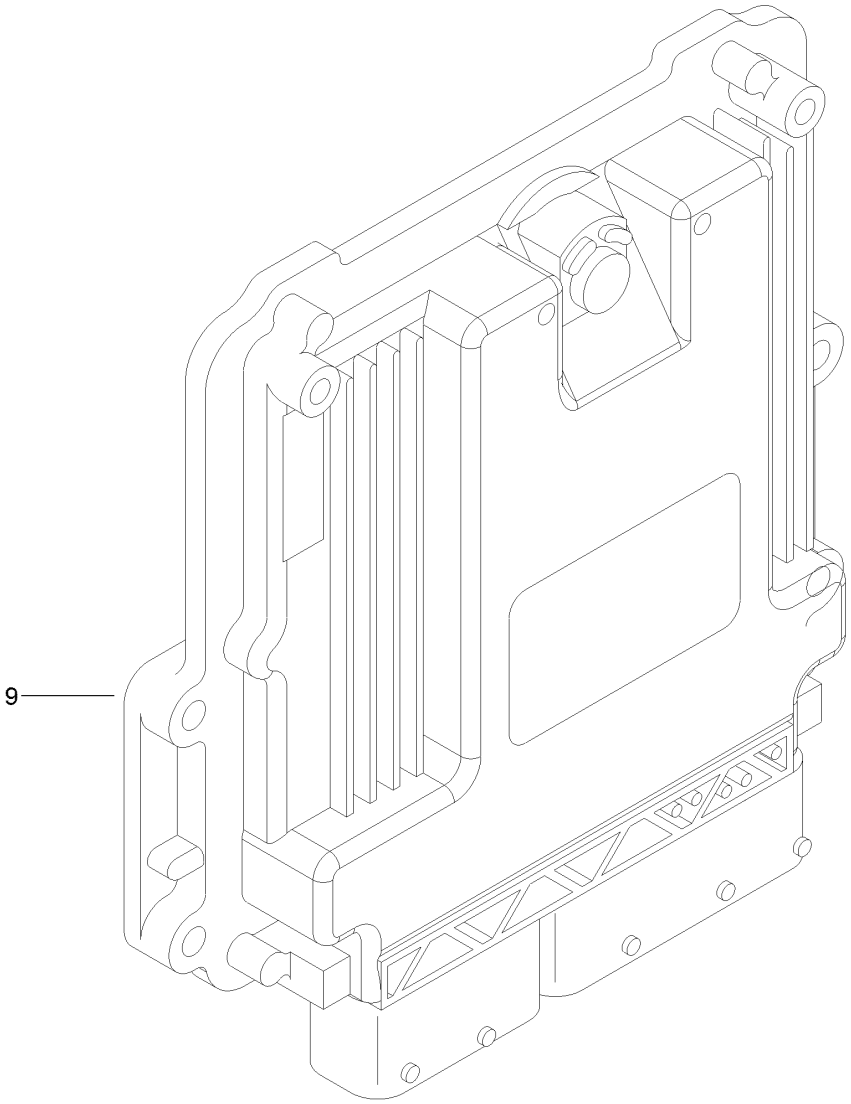

Electronic Control Unit Assembly (continued)

Ref.	Part Number	Qty.	Description
9	121-5592	1	Electronic Control Unit

Electric Parts Assembly

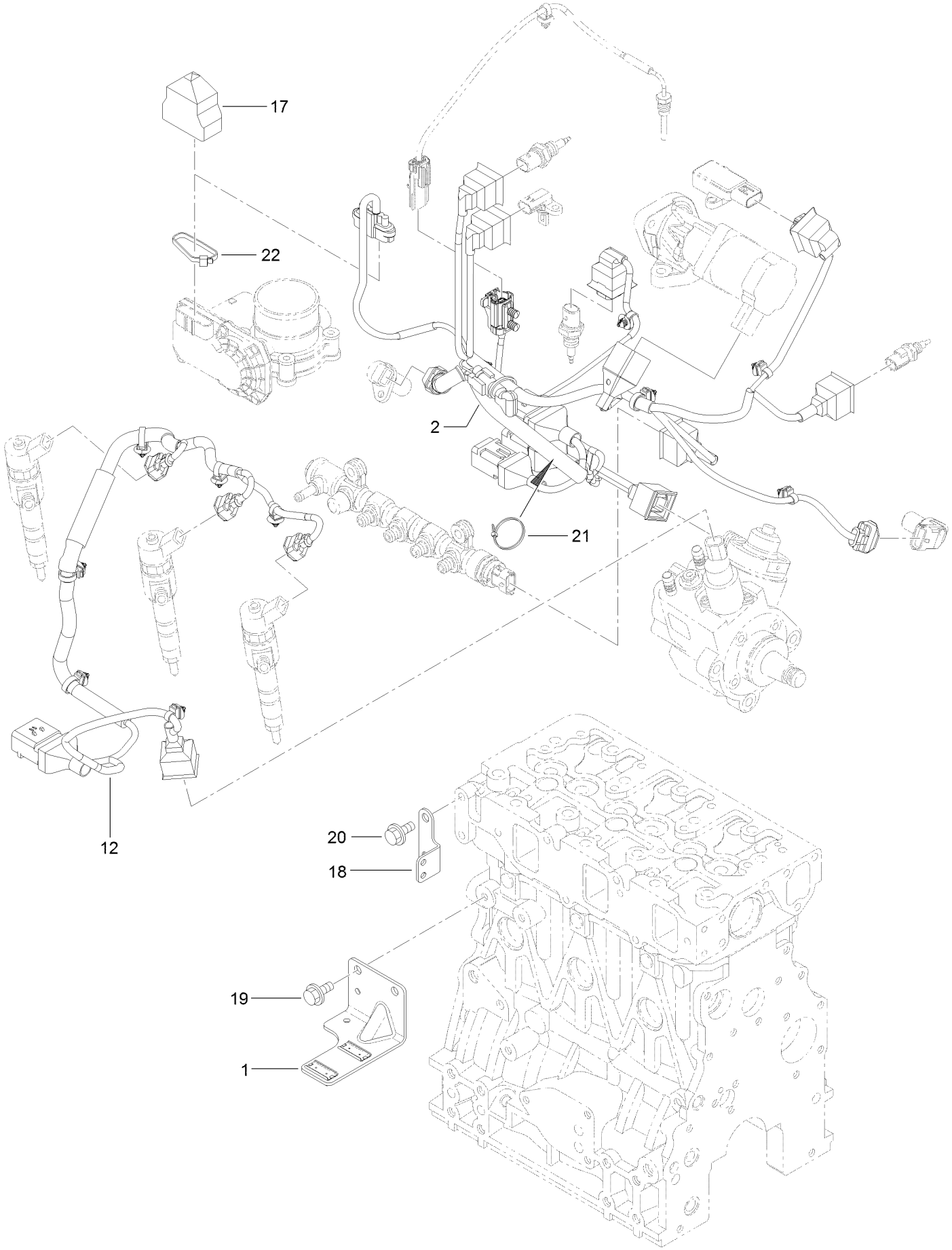

Electric Parts Assembly (continued)

Ref.	Part Number	Qty.	Description
1	130-7436	1	Bracket-Connector
2	135-4029	1	Harness
12	130-7438	1	Harness
17	131-2713	1	Boot-Cap
18	127-3090	1	Bracket-Harness
19	125-7213	2	Bolt
20	125-7212	2	Bolt
21	127-3187	1	Band
22	127-3188	1	Band

Accessory Assembly

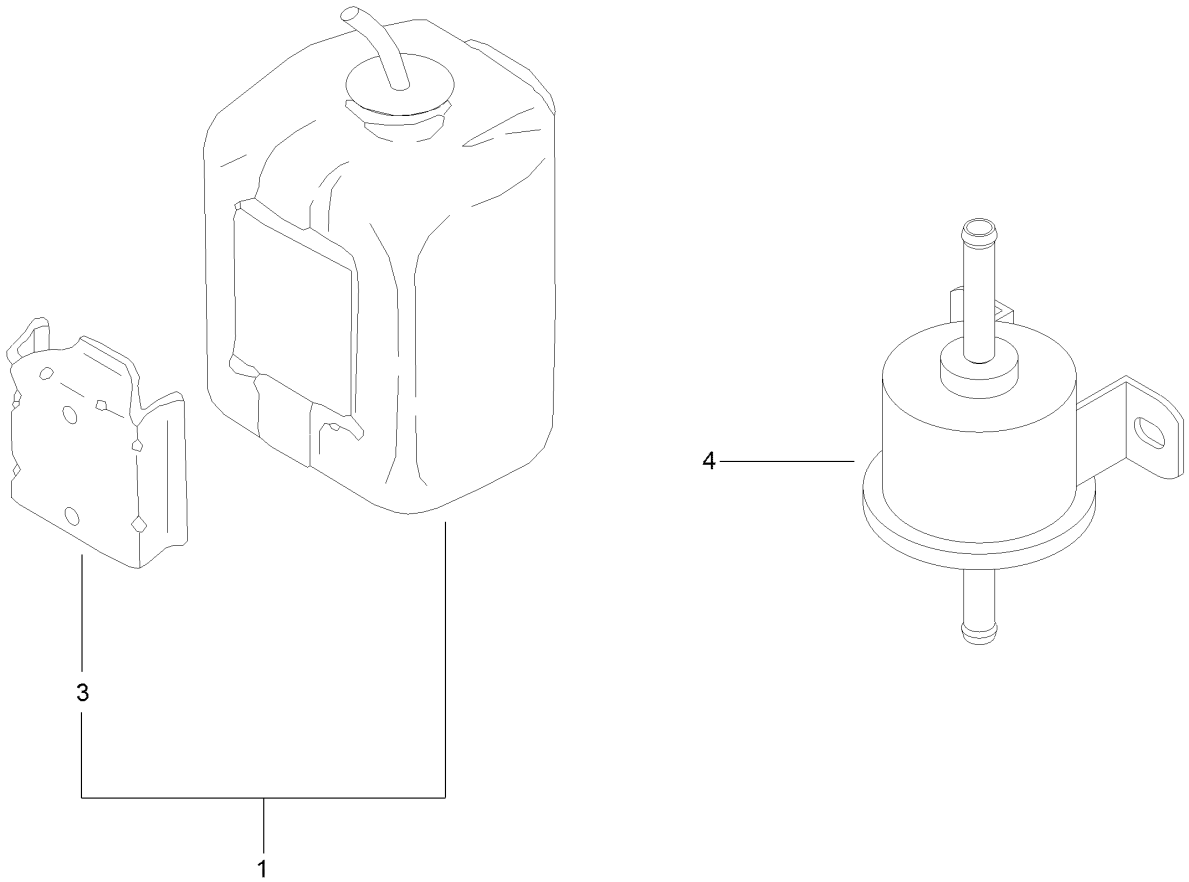

Accessory Assembly (continued)

Ref.	Part Number	Qty.	Description
1	140-7185	1	Tank ASM
3	140-7165	1	Bracket-Tank
4	121-5613	1	Pump-Fuel, Electric

Gasket Set

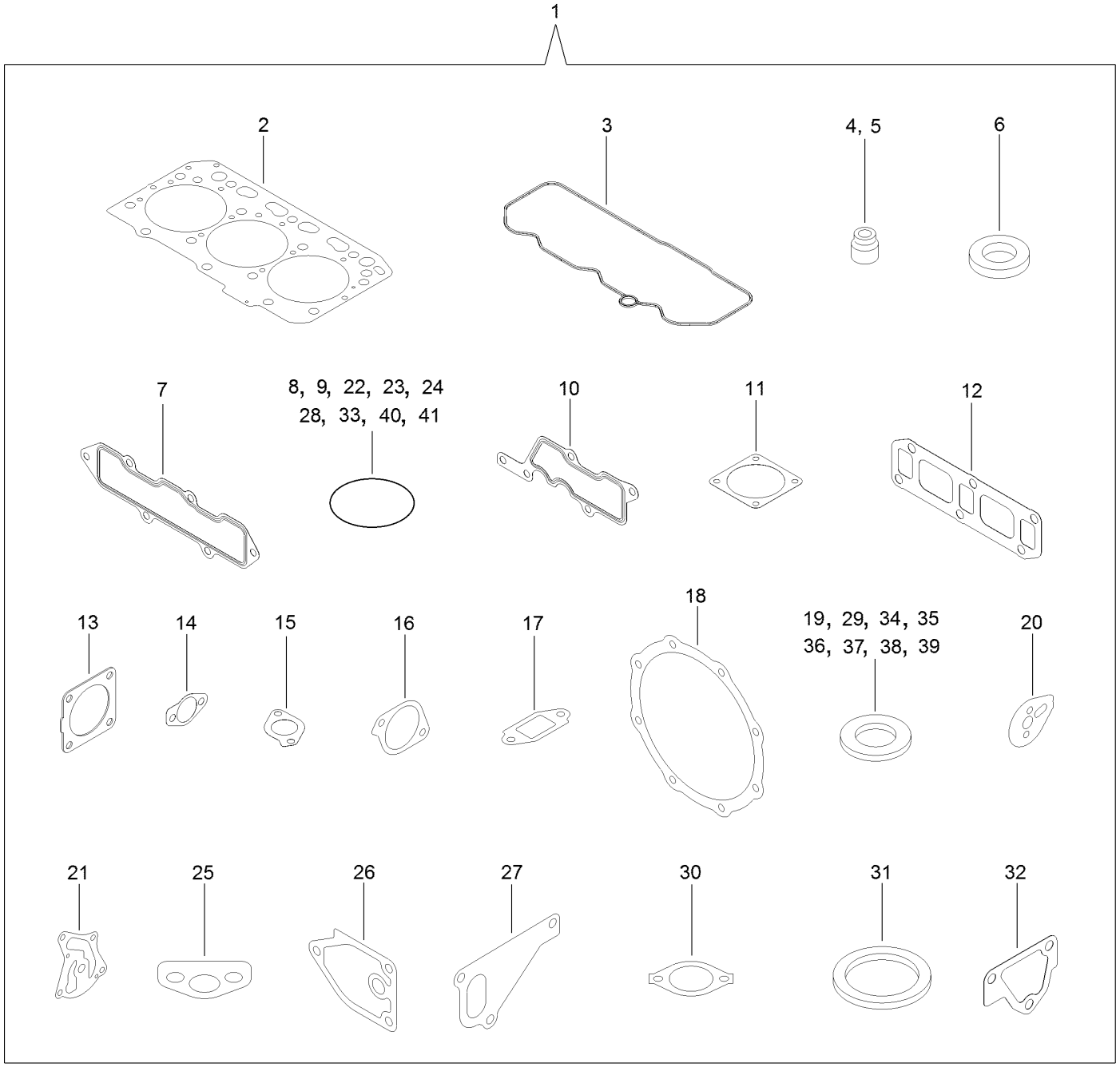
1
2
3
4, 5
6
7
8, 9, 22, 23, 24
28, 33, 40, 41
10
11
12
13
14
15
16
17
18
19, 29, 34, 35
36, 37, 38, 39
20
21
25
26
27
30
31
32

Gasket Set (continued)

Ref.	Part Number	Qty.	Description
1	130-7440	1	Packing (Gasket Set)
2	127-4716	1	Head Gasket ASM
3	127-3762	1	Gasket-Cover, Cylinder Head
4	127-2986	3	Seal-Stem, Valve
5	127-3027	3	Seal-Stem, Valve
6	127-3021	3	Gasket-Injector
7	127-3769	1	Gasket-Manifold, Intake
8	127-3032	2	O Ring-Sensor, Pressure
9	127-3033	1	O-Ring
10	127-3034	1	Gasket-Collector
11	127-3037	2	Gasket-Throttle
12	127-3775	1	Gasket-Manifold, Exhaust
13	127-2987	1	Gasket-Silencer
14	127-3043	2	Gasket-Cooler, E G R
15	127-3016	1	Gasket
16	127-3050	1	Gasket-Intake Valve, E G R
17	127-3051	1	Gasket-Out Valve, E G R
18	127-3787	2	Gasket-D P F
19	127-3056	4	Gasket-Sensor
20	127-3069	1	Gasket-Idle, Shaft B
21	127-3004	1	Gasket
22	125-6909	2	O-Ring
23	127-2973	1	O-Ring
24	125-7075	1	O-Ring
25	125-7022	1	Gasket
26	125-7024	1	Gasket
27	125-7047	1	Gasket
28	125-7048	1	O-Ring
29	125-6979	1	Gasket
30	125-7110	1	Gasket
31	125-7026	1	Gasket
32	125-6978	1	Gasket
33	127-3074	1	O-Ring
34	125-7174	1	Washer-Seal
35	125-7176	1	Washer-Seal
36	127-3166	2	Washer-Seal
37	125-7177	1	Washer-Seal
38	125-7192	1	Gasket
39	127-3174	2	Gasket
40	138-7829	3	O-Ring
41	125-7197	2	O-Ring

Attachments and Accessories

For 31902 Groundsmaster 3300 All-Wheel Drive Traction Unit

Product Name	Model/Part
Slope Sensor Kit	31952
CE Kit, Groundsmaster 3200 or 3300 Series Traction Unit	31953
CE Kit, Groundsmaster 3200 or 3300 Series 60in Side Discharge Rotary Mower	31957
CE Kit, Groundsmaster 3200 or 3300 Series 72in Side Discharge Rotary Mower	31958
Seat Cover (W/arm rest)	117-0095
CE Kit, Groundsmaster 3200 or 3300 Series 60in Rear Discharge Rotary Mower	31959
CE Kit, Groundsmaster 3200 or 3300 Series 72in Rear Discharge Rotary Mower	31960
Auxiliary HYD Kit	31966
60in SD Deck	31970
60in RD Deck	31971
72in SD Deck	31972
PX Hydraulic Fluid (55 Gal)	133-8087
72in RD Deck	31973
PX Hydraulic Fluid (5 Gal)	133-8086
60in RD Deck, T2	31974
Premium Synthetic Bio-Degradable Hydraulic Fluid (5 Gallon Pail)	119-2157
72in RD Deck, T2	31975
Premium Synthetic Bio-Degradable Hydraulic Fluid (55 Gallon Drum)	119-2158
Recycler Kit 60in/152cm SD	31976
Recycler Kit, 60In/152cm RD	31977
Recycler Kit, 72In/183cm SD	31978
Recycler Kit, 72In/183cm RD	31979
Seat Assembly - Standard	31980
Seat Assembly - Mechanical Suspension	31981
Seat Assembly - Air Ride Suspension	31982
Storage Box Kit	31983
USB Charging Kit	31984
Recycler Kit 60in/152cm Rd T2	31985
Recycler Kit 72in/183cm Rd T2	31986
Cab-Winter, GM3000 Series	31990
Road Light Kit (North America)	31991
Road Light Kit (EU)	31992
Accessory Control Kit	31994
LED Beacon Kit	31996
White Universal Sunshade	30669
Led Work-light Kit (GM3200/3300, Rops)	31997
15-Pound Cast Weight	112-7059-01
Red Universal Sunshade	30671
Operator Cooling Fan	03247
42-Pound Weight	114-4096
Switch Panel-Universal Sunshade	03248
Beacon Kit	138-2699
Sunshade Work Lights Kit	138-2700
Storage Bag Kit	139-2020
SMV Kit	139-2339
Wrench-Caster Cap/Latch	138-6367

Attachments and Accessories (continued)

Filter-Air	108-3810
Semi-Gloss Black Spray Paint	361-9
Filter-Fuel	139-6017
Fuel/Water Separator Filter	125-2915
Filter-Oil, Transmission	86-3010
Engine Oil Filter	125-7025
Hydraulic Hose Kit	31999
Power Harness Kit	140-1559
Kit-Weight	144-0480
Plate-Weight, 25 LBS	144-0484
Toro Red 12oz Aerosol Can	361-10
Paint-Black Bottle	112-0176
Paint-Red Pen	112-0177
Paint-Red Bottle	112-0178
Kit-Blade, Std (24.5) 3pk	144-3911
Kit-Blade, Med Flow (20.5) 3pk	144-3912
Kit-Blade, High Flow (20.5) 3pk	144-3913
Kit-Blade, Atomic (20.5) 3pk	144-3914
Kit-Blade, Low Flow (24.5) 3pk	144-3915
Kit-Blade, Recycling (24.5) 3pk	144-3916
Kit-Blade, Low Flow (20.5) 3pk	144-3917
Kit-Blade, Recycling (20.5) 3pk	144-3918
Kit-Blade-24.50 Low Flow 3pk	144-3962
Kit-Blade-24.50 Recycler 3pk	144-3963
Kit-Blade-20.50 Low Flow 3pk	144-3964
Kit-Blade-20.50 Recycler 3pk	144-3965
Kit-Blade-24.50 Atomic 3pk	144-3966
Kit-Blade-20.50 Atomic 3pk	144-3967
Hose Replacement Kit, Groundsmaster 3200 or 3300 Series Traction Unit	144-3960
Shim Tensioner Kit, Groundsmaster 3200 or 3300 Series Traction Unit	144-4045
Tube Replacement Kit, Groundsmaster 3200 or 3300 Series Traction Unit	144-4047
Vibration Reduction Kit, Groundsmaster 3300 Series Traction Unit	144-4050
Boss Plow, 5ft Straight Blade	MSC23345
Blade Crate (Snowplow), ATV Poly S	STB13567B
Universal Wireless Hourmeter Kit	144-2436

Notes:

Notes:

TORO®

Count on it.