Form No. 3455-448 Rev A

TORO®

Count on it.

Parts Catalog

152cm Z Master® 4000 Series

Riding Mower

Model No. 74056TE—Serial No. 411937555 and Up

Register at www.Toro.com.
Original Instructions (EN)

CE

3455-448 A

Ordering Replacement Parts

To order replacement parts, please supply the part number, the quantity, and the description of each part desired.

Understanding Reference Numbers

Each identified part in an illustration has a reference number. The reference number for a part also appears in the parts list, along with other information about the part.

This catalog uses two special reference number formats, one to indicate parts in a service assembly and another to indicate the quantity of a given part in an illustration.

Service Assembly Reference Numbers

Parts in service assemblies have reference numbers in the form a:b. The a represents the reference number of the entire service assembly and the b represents a sequential number unique to each part within the service assembly.

For example, a wheel assembly might be identified by reference number 6, the tire by 6:1, the valve by 6:2, and the wheel by 6:3. When you order the assembly identified by reference number 6, you receive all parts identified by reference numbers 6:1,6:2, and 6:3. However, you may also order any part individually. Reference numbers of this type appear in illustration and in parts lists.

Reference Numbers Indicating Quantity

In an illustration, if a reference number indicates more than one part, the reference number has the form nX y. The n represents the quantity of the part, the X is the multiplication symbol, and the y represents the reference number.

For example, in an illustration, the reference number 2X 37 means that two of the parts identified by reference number 37 are indicated.

Contents

Frame Assembly 4
Roll-Over Protection System Assembly No. 139-8063 6
Hydraulic Drive Assembly 8
Throttle, Choke Cables and Guard Assembly 10
Fuel System Assembly 12
Fuel Tank Assembly No. 139-6722 14
Tank Retainer Assembly 16
Motion Control Assembly 18
Left and Right Control Arm Assembly 20
Caster Wheel Assembly 22
Caster Wheel and Fork Assembly 24
Rear Wheel Assembly 26
Electrical Assembly 28
Wire Harness Assembly No. 139-8078 30
Deck Lift Assembly 32
Deck Strut Assembly No. 140-1179 34
Engine, Clutch and Muffler Assembly 36
Seat Suspension Platform Assembly 38
Seat Assembly No. 144-2631 40
Decal Assembly 42
Deck Assembly 44
Deck Decal Assembly No. 144-6588 46
Spindle Assembly No. 137-9780 48
Deflector Assembly No. 144-2635 50
Idler Arm Assembly No. 139-1087 52
Attachments and Accessories 54

© 2022—The Toro® Company
8111 Lyndale Avenue South
Bloomington, MN 55420

Contact us at www.Toro.com.
Printed in the USA.
All Rights Reserved

Frame Assembly

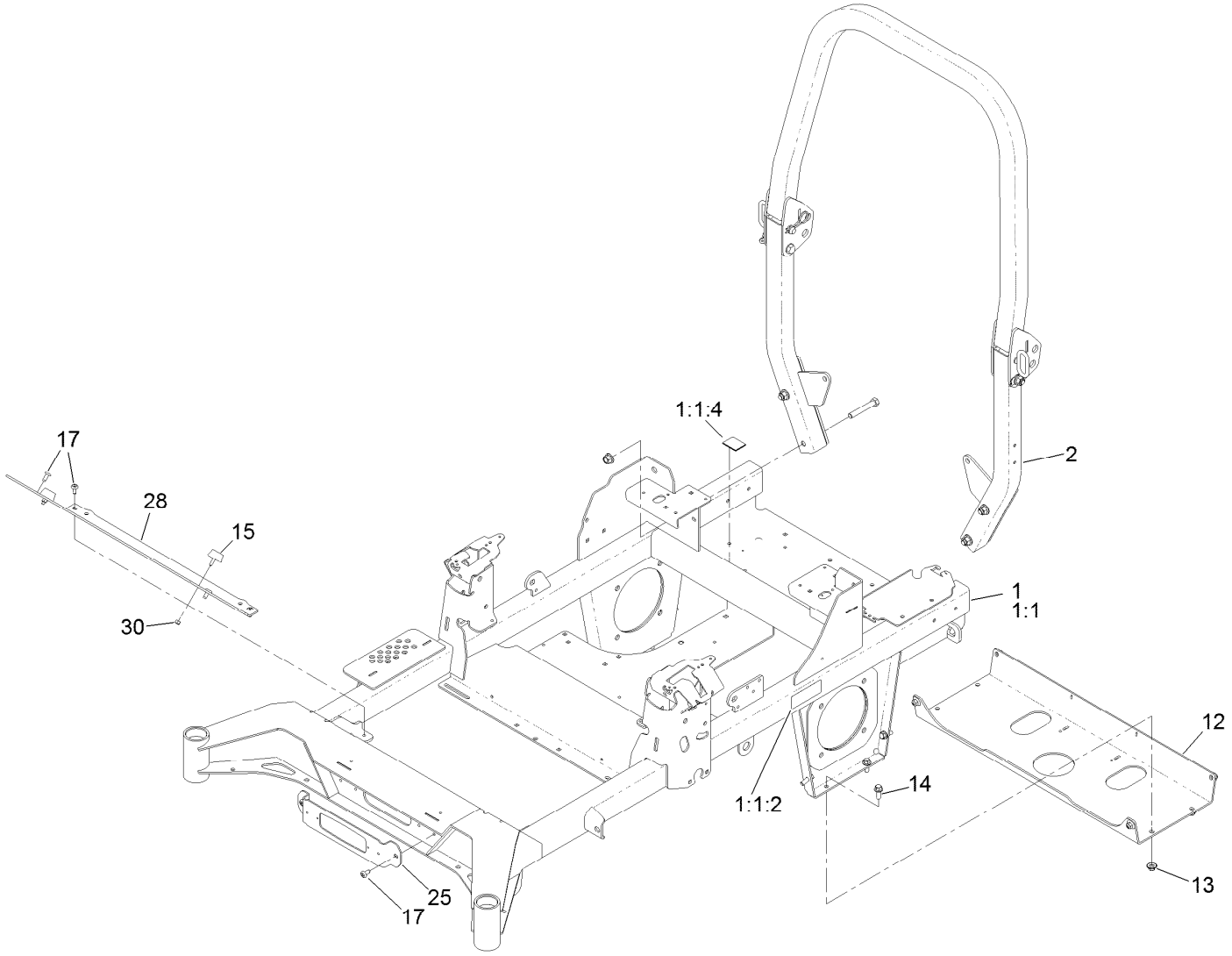

Frame Assembly (continued)

Ref.	Part Number	Qty.	Description
1	144-6590	1	Frame Decal ASM
1:1		1	Frame-60 ●
1:1:2	126-4363	2	Decal-Warning
1:1:4	144-2687	1	Decal, Belt Routing
2	139-8063	1	ASM-ROPS
12	139-6717-01	1	Plate-Hydro
13	109-6658	8	Nut-Flange, NI
14	3234-42	8	Screw-HHF
15	131-8834	2	Bumper
17	138-9753	6	Screw
25	140-4994-01	1	Bracket-Light
28	140-4997-01	1	Toeboard [red]
30	3296-42	2	Nut-Lock, NI

● Not serviced separately

Roll-Over Protection System Assembly
No. 139-8063

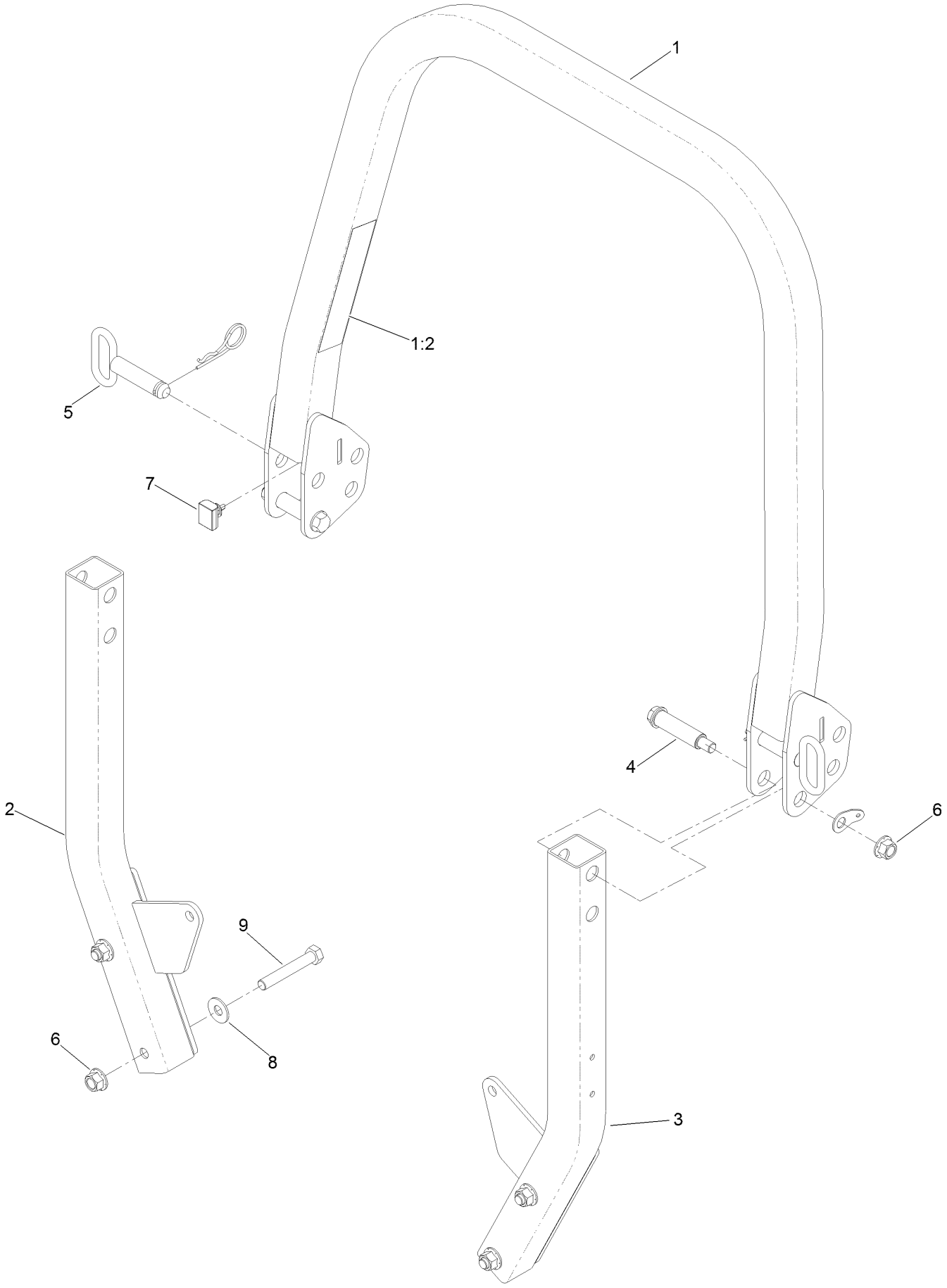

Roll-Over Protection System Assembly No. 139-8063 (continued)

Ref.	Part Number	Qty.	Description
1		1	Upper ROPS ASM ●
1:2	107-3069	1	Decal-Warning
2		1	ASM-ROPS, RH Suspension [black] ●
3		1	ASM-ROPS, LH Suspension [black] ●
4	126-9209	2	Bolt-Shoulder
5	103-4553	2	Pin-Fold, ROPS
6	99-5107	6	Nut-Lock
7	109-5337	2	Bumper-ROPS
8	109-9505	4	Washer-Spring
9	325-13	4	Screw-HH

● Not serviced separately

Hydraulic Drive Assembly

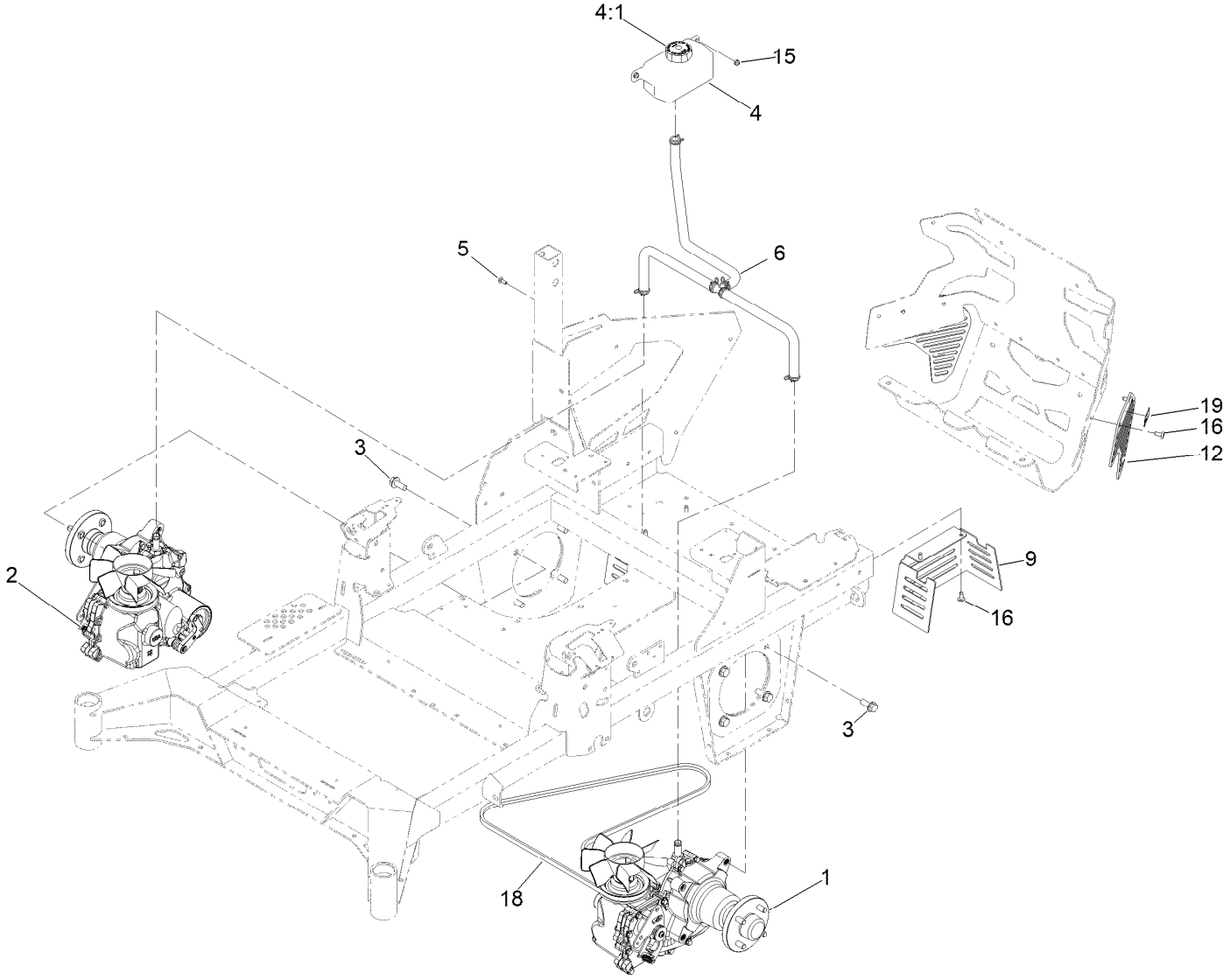

Hydraulic Drive Assembly (continued)

Ref.	Part Number	Qty.	Description
1	145-3696	1	LH Transaxle ASM W/Arm
2	145-3695	1	RH Transaxle ASM W/Arm
3	3234-38	8	Screw-HHF
4	119-9908	1	Hydraulic Reservoir ASM
4:1	109-3320	1	Cap-Reservoir, HYD
5	3229-28	2	Screw-CARR
6	140-1225	1	ASM-Hose, Hydraulic

Ref.	Part Number	Qty.	Description
9	145-1949-03	2	Guard-Clutch [black]
12	144-6591-03	2	Guard-Muffler, Te
15	104-7201	2	Nut-HF, NI
16	138-9753	8	Screw
18	140-7994	1	Belt-V
19	106-5517	2	Decal-Warning

Throttle, Choke Cables and Guard Assembly

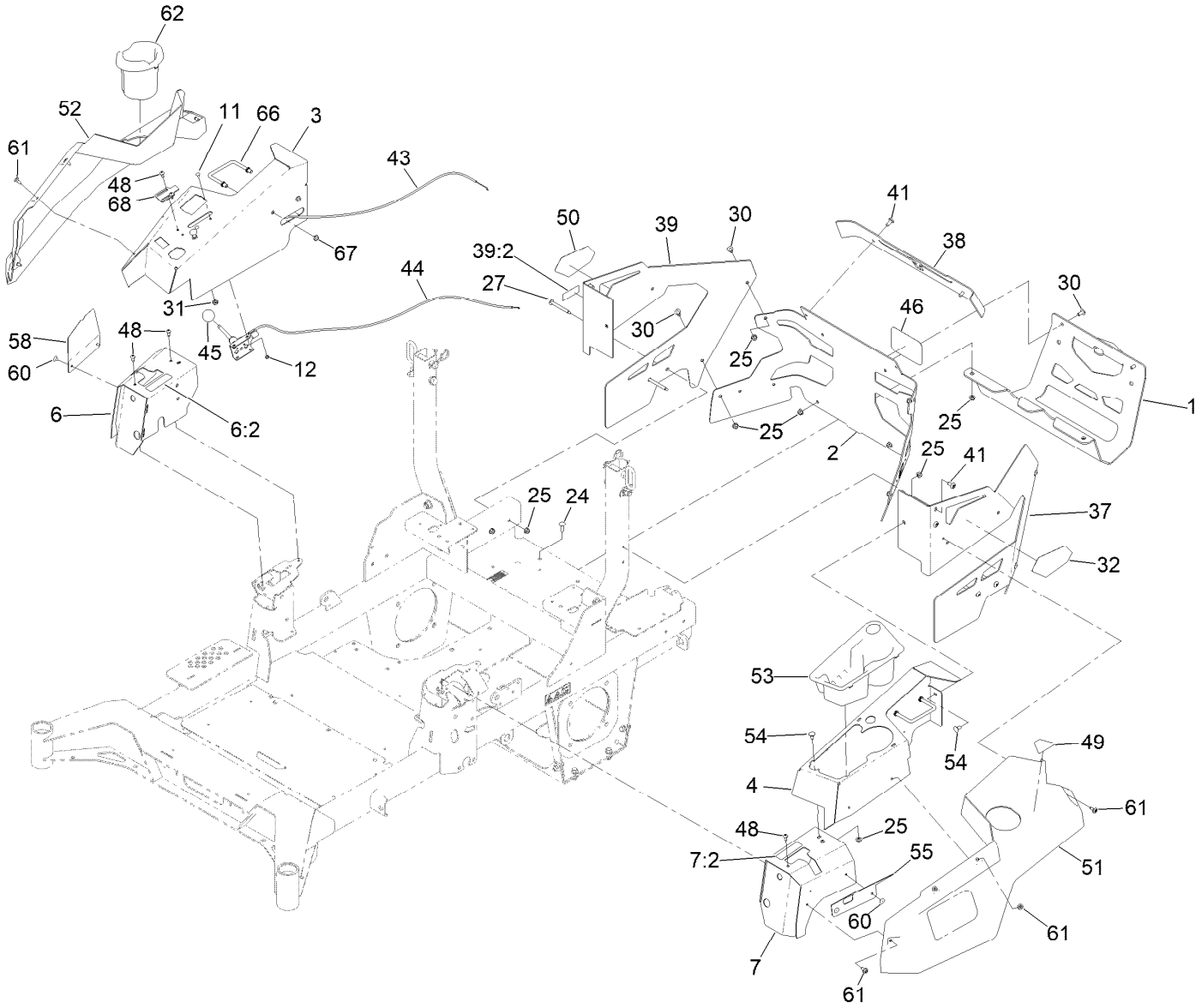

Throttle, Choke Cables and Guard Assembly (continued)

Ref.	Part Number	Qty.	Description
1	139-6719-03	1	Guard-Muffler [black]
2	144-2637	1	Rear Guard ASM
3	144-6551-01	1	Console-RH
4	144-2638-01	1	Console-LH
6	140-4867	1	RH Cover ASM
6:2	99-8936	1	Decal-Control, Motion
7	140-4866	1	LH Cover ASM
7:2	99-8936	1	Decal-Control, Motion
11	1-807513	2	Bolt-CARR
12	3296-2	2	Nut-Lock, NI
24	3230-22	2	Screw-CARR
25	104-8300	16	Nut-HF, NI
27	126-6267	4	Screw-TTH
30	126-6268	6	Screw-Torx
31	3220-3	1	Nut-HJ
32	139-1149	1	Decal - 4000 Series, LH
37	145-6964-01	1	Guard-Rear, LH
38	140-1221-01	1	Guard-Rear, Top
39	145-7012	1	RH Rear Guard ASM
39:2	133-8062	1	Decal-Arrestor, Spark

Ref.	Part Number	Qty.	Description
41	138-9753	6	Screw
43	139-6735	1	Cable-Control, Choke
44	139-6734	1	Cable-Control, Throttle
45	1-603175	1	Knob-Ball
46	105-8278	1	Decal
48	87-6620	6	Screw-Tph Thd Form
49	126-9939	1	Decal-Fill, Fuel
50	140-7987	1	Decal-4000 Series, RH
51	140-7979	1	Side Pod, LH
52	140-7980	1	Side Pod, RH
53	140-7968	1	Cup Holder
54	3230-18	4	Screw-CARR
55	140-7996-03	1	Plate-Cover, LH Front
58	140-7998-03	1	Plate-Cover, RH Front
60	130-8451	4	Rivet-Trifold
61	120-7950	8	Screw-Torx
62	140-8019	1	Cupholder-RH
66	144-2642	2	Rod-Support, Pod
67	3296-59	4	Nut-Lock, NI
68	144-6550	1	Plate-Throttle Stop

Fuel System Assembly

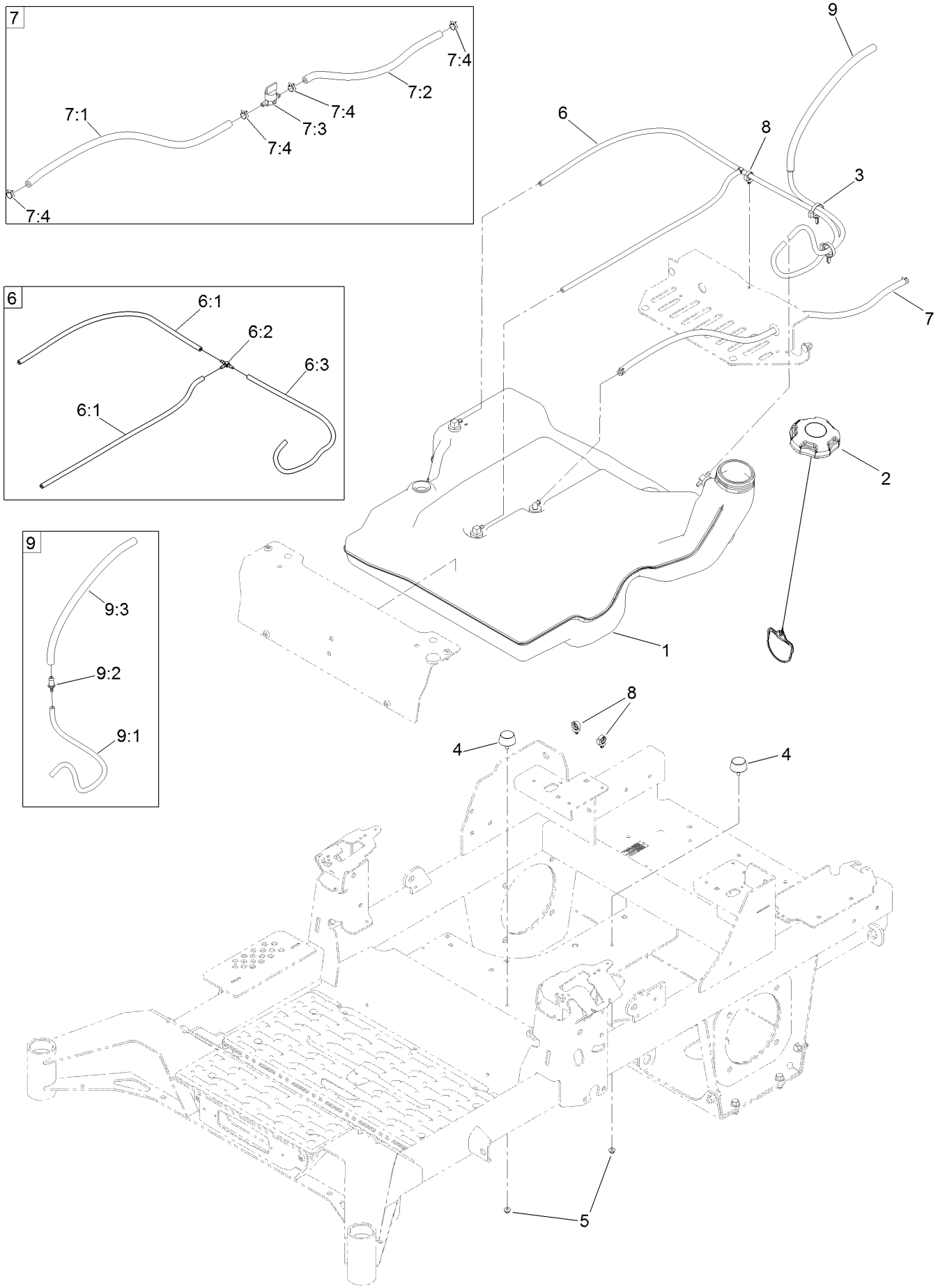

Fuel System Assembly (continued)

Ref.	Part Number	Qty.	Description
1	139-6722	1	Fuel Tank ASM
2	135-4801	1	Cap-Fuel, Ratcheting
3	104-2490	2	Clamp-Hose
4	131-8834	2	Bumper
5	104-7201	2	Nut-HF, NI
6	139-8067	1	Vent Hose ASM
6:1	138-3152	2	Hose-Vent
6:2	120-2234	1	Fitting-Tee
6:3	140-4956	1	Hose-Fuel
7	139-8068	1	Fuel Hose ASM

Ref.	Part Number	Qty.	Description
7:1	109-0298	1	Line-Fuel
7:2	114-3766	1	Hose-Fuel
7:3	1-603770	1	Valve-Fuel
7:4	2412-98	4	Clamp-Hose
8	126-5523	3	Clip
9	140-4957	1	ASM-Fuel Vent
9:1	138-3152	1	Hose-Vent
9:2	116-4630	1	Fitting-Orifice, Straight
9:3	116-4344	1	Hose-Fuel

Fuel Tank Assembly No. 139-6722

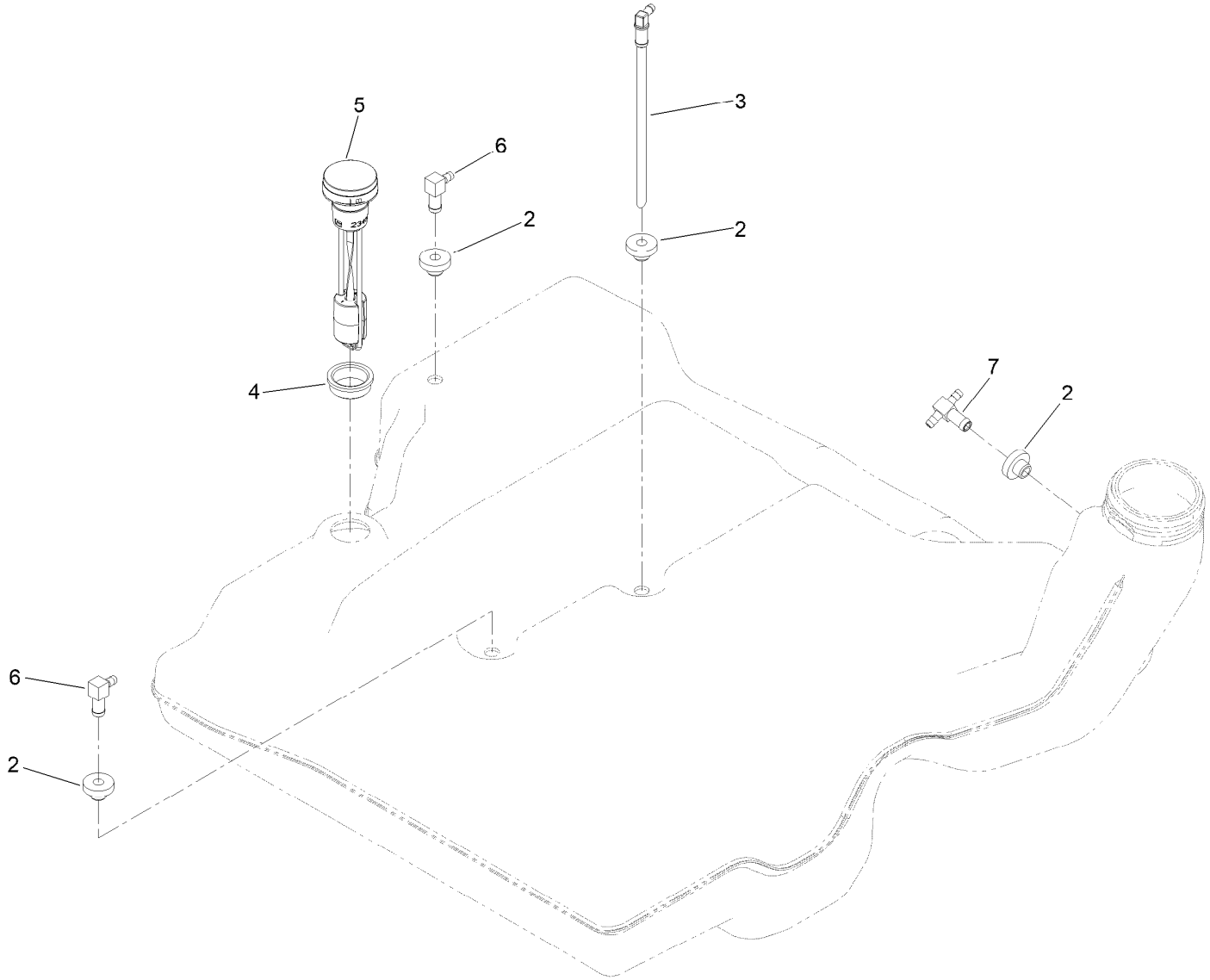

Fuel Tank Assembly No. 139-6722 (continued)

Ref.	Part Number	Qty.	Description
2	46-6560	4	Bushing
3	140-4955	1	Connector Elbow-90 DEG
4	133-9269	1	Grommet-Fuel
5	139-8058	1	Gauge-Fuel
6	126-9057	2	Fitting-90 DEG
7	140-4954	1	Fitting-Tee

Tank Retainer Assembly

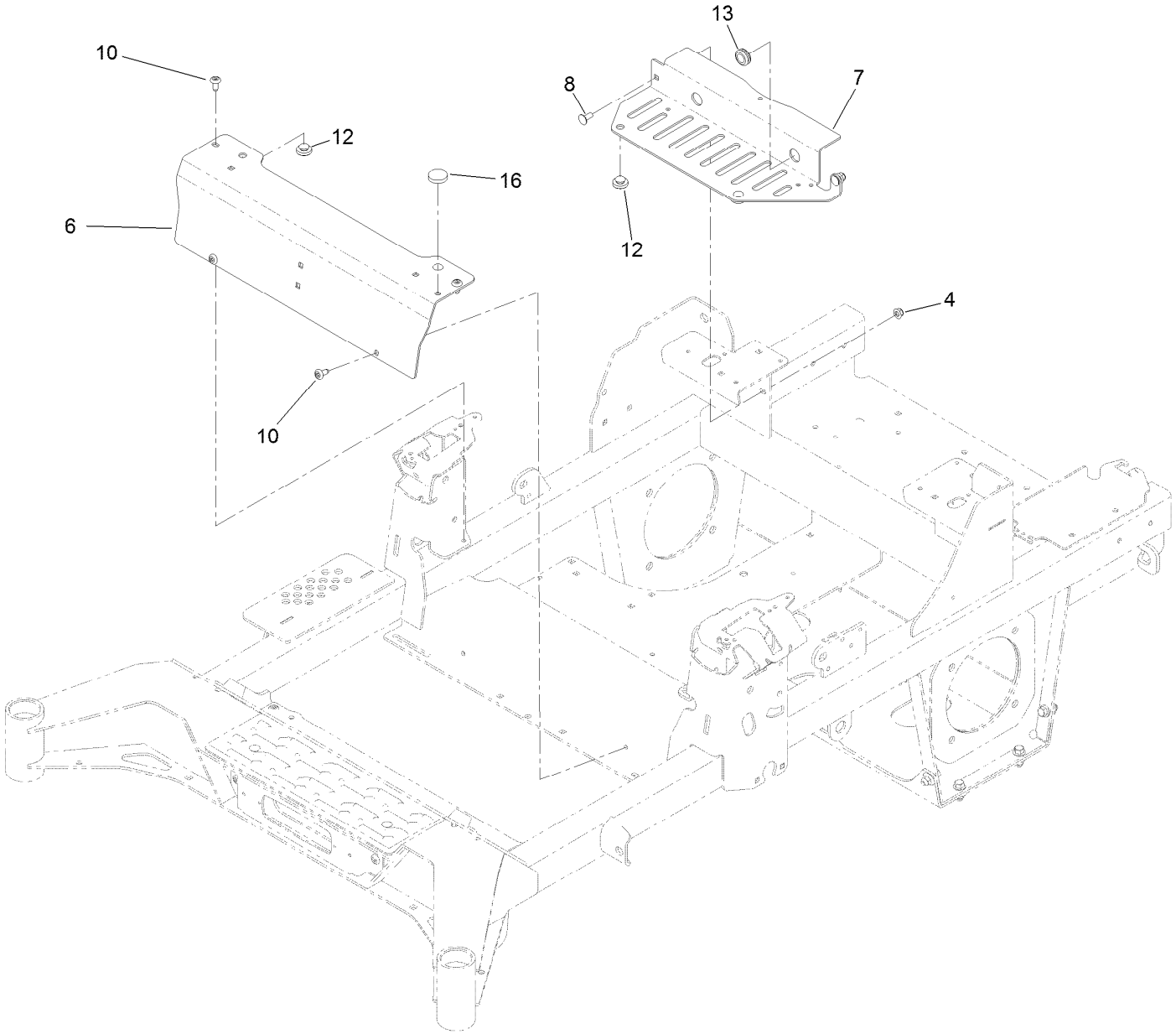

Tank Retainer Assembly (continued)

Ref.	Part Number	Qty.	Description
4	104-8300	2	Nut-HF, NI
6	139-6706-03	1	Plate-Tank Retainer, Front
7	139-6707-03	1	Plate-Tank Retainer, Rear
8	3230-23	2	Bolt-CARR

Ref.	Part Number	Qty.	Description
10	138-9753	4	Screw
12	135-0505	4	Bumper-Seat
13	112-7069	1	Grommet
16	109-9233	1	Bumper-Push-In, Rubber

Motion Control Assembly

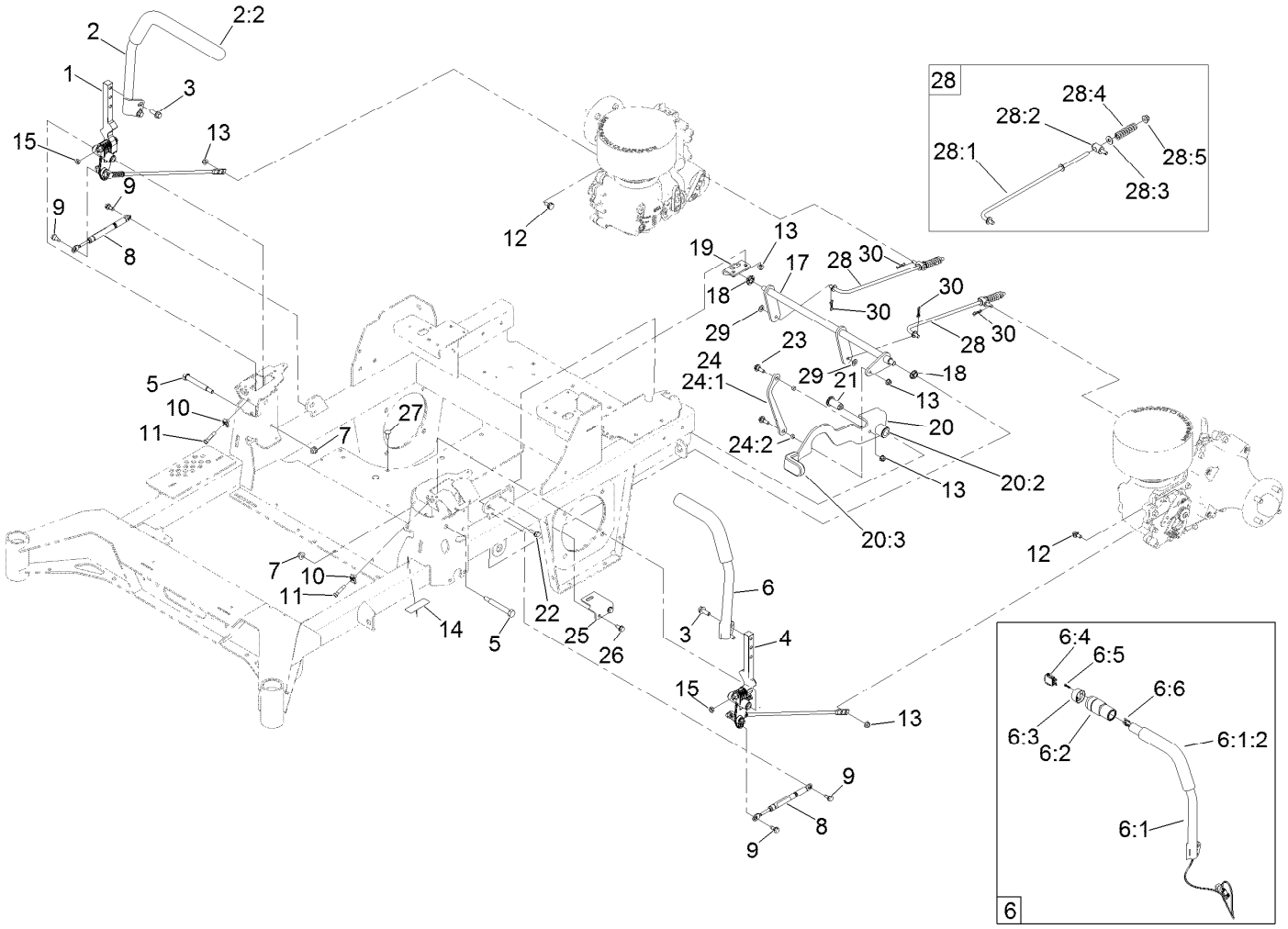

Motion Control Assembly (continued)

Ref.	Part Number	Qty.	Description
1	139-6697	1	Motion Control ASM-RH
2	139-1089	1	Handle ASM - RH
2:2	109-5668	1	Grip-Lever, Control
3	3234-42	4	Screw-HHF
4	139-6696	1	Motion Control ASM-LH
5	115-5099	2	Bolt-Pivot
6	140-8020	1	Handle ASM-LH
6:1		1	Handle ASM - LH ●
6:1:2	109-5668	1	Grip-Lever, Control
6:2	125-2662	1	Case ASM
6:3	121-3399	1	Cap-Switch
6:4	140-1228	1	Switch, Spdt (On)-Off-(On)
6:5	94-4496	2	Screw-PPH
6:6	144-0354	1	Harness-Wire, Handle
7	104-8301	2	Nut-HF, NI
8	126-4322	2	Damper
9	126-4424	4	Screw-Shoulder
10	112-3306	2	Nut
11	126-4299	2	Screw-HSBH
12	37-8771	2	Bolt-Shoulder, HF
13	104-8300	6	Nut-HF, NI
14	115-9625	1	Decal-Brake, Parking
15	3218-3	2	Nut-Jam

Ref.	Part Number	Qty.	Description
17	144-2658	1	Brake ASM
18	126-5820	2	Bearing-Spherical
19	139-6742	1	Bracket-Brake
20	139-6726	1	Brake Lever ASM W/Grip
20:2	109-8054	2	Bushing-Flange
20:3	132-4749	1	Grip-Lever
21	139-6743	1	Pivot-Handle
22	3234-29	1	Screw-HHF
23	116-2670	2	Screw-Shoulder
24	144-6566	1	Brake Link ASM
24:1	144-6565	1	Plate-Link, Handle
24:2	116-4976	2	Bushing-Sleeve
25	139-6745	1	Plate-Switch
26	32144-70	2	Screw-HWHTF
27	3230-23	2	Bolt-CARR
28	144-0353	2	Brake Rod ASM
28:1	140-4952	1	Rod-Brake
28:2	139-6741	1	Fitting-Rod
28:3	3256-3	1	Washer-Flat
28:4	144-2645	1	Spring-Compression
28:5	104-8301	1	Nut-HF, NI
29	3256-45	2	Washer-Flat
30	119-1415	4	Pin-Cotter, Locking

● Not serviced separately

Left and Right Control Arm Assembly

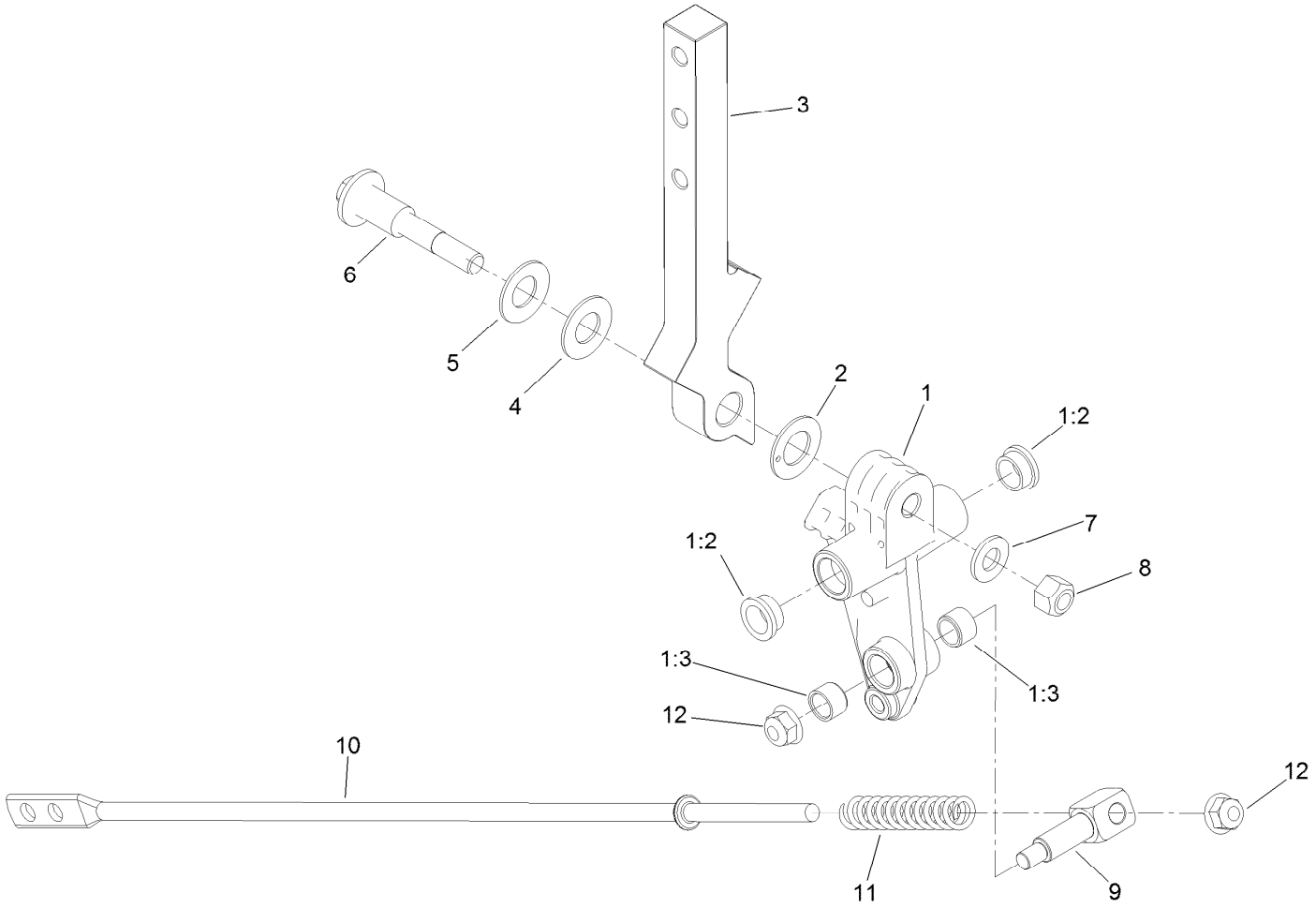

Left and Right Control Arm Assembly (continued)

Ref.	Part Number	Qty.	Description
1	126-3773	1	Control Arm ASM
1:2	126-8909	2	Bushing
1:3	1-413152	2	Bushing-Sleeve
2	126-7296	1	Washer-Friction
3	126-8182	1	Arm-Control
4	117-1240	1	Washer
5	119-8925	1	Washer-Belleville
6	117-1198	1	Bolt-Pivot
7	3256-24	1	Washer-Flat
8	32152-2	1	Nut-Lock, Cone
9	126-5434	1	Swivel
10	140-4949	1	Link-Control
11	126-8195	1	Spring-Return, Neutral
12	104-8300	2	Nut-HF, NI

Caster Wheel Assembly

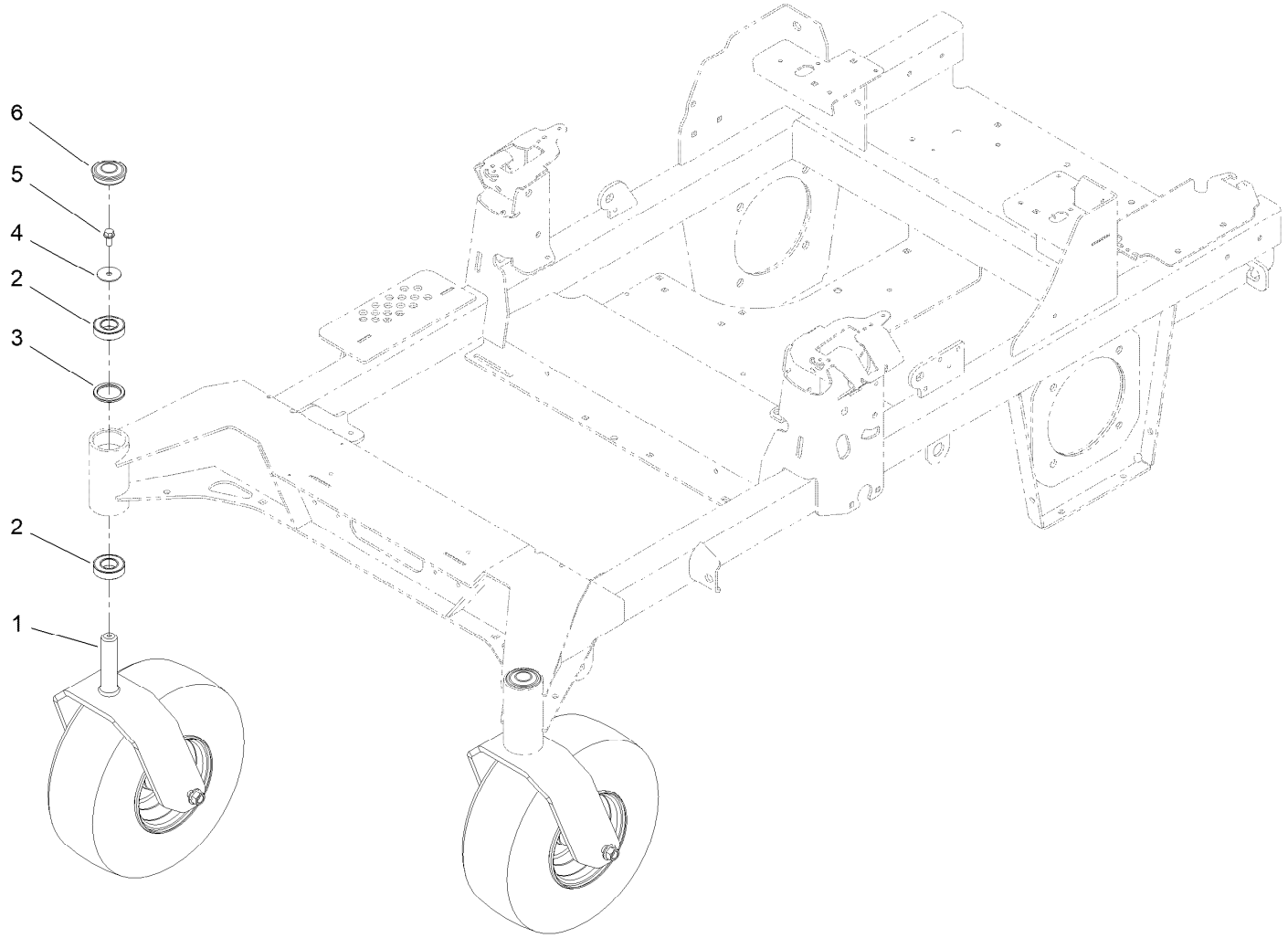

Caster Wheel Assembly (continued)

Ref.	Part Number	Qty.	Description
1		2	ASM-Front Caster W/Fork ●
2	109-3678	4	Bearing-Ball
3	145-3660	2	Spacer-Bearing
4	3256-68	2	Washer-Flat
5	3234-5	2	Screw-HHF
6	144-0375	2	Cap, Grease

● Not serviced separately

Caster Wheel and Fork Assembly

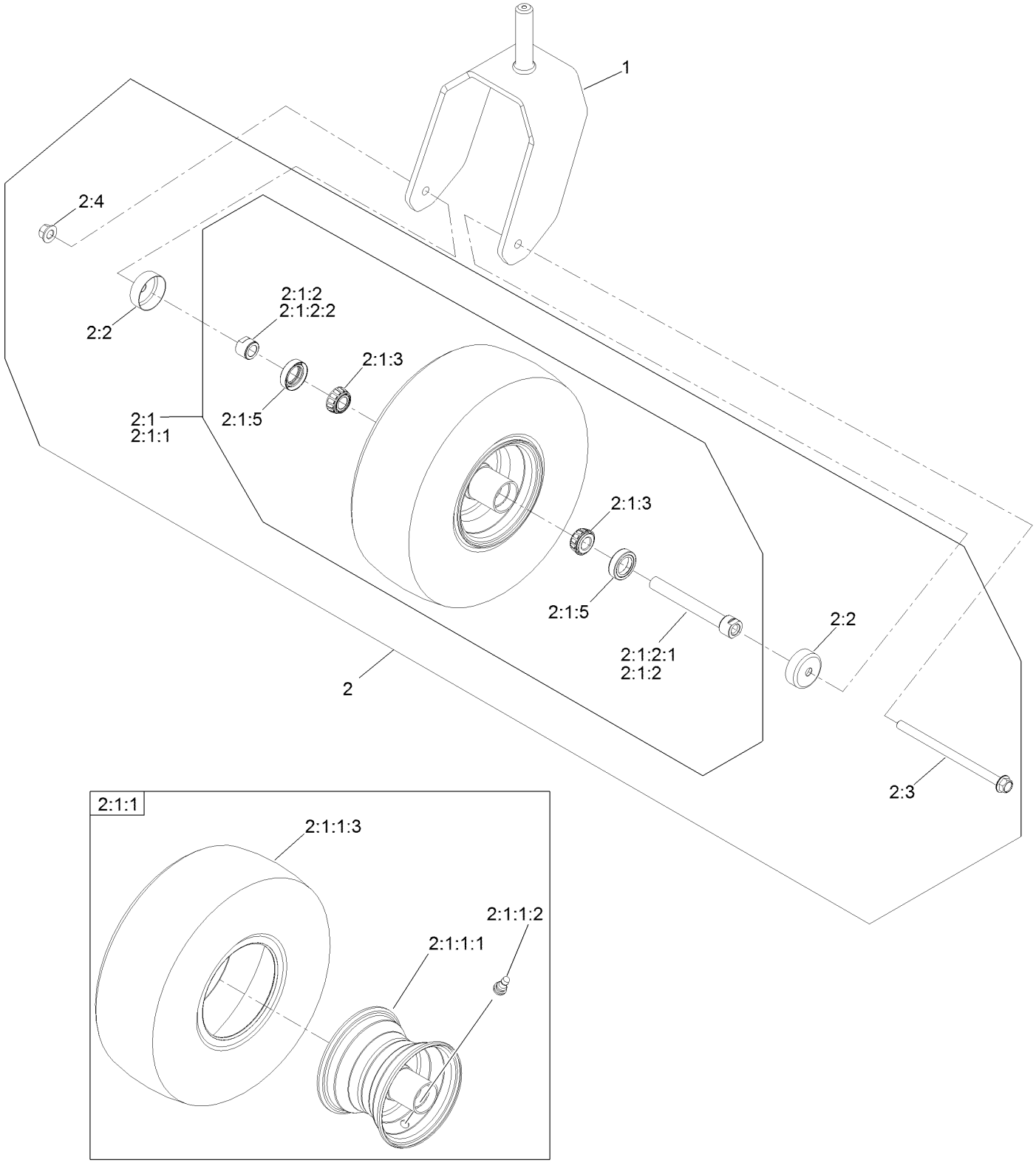

Caster Wheel and Fork Assembly (continued)

Ref.	Part Number	Qty.	Description
1	147-0295-01	1	15In Caster Fork [red]
2	140-4943	1	ASM-Pneumatic 15X6.50-6
2:1		1	ASM Whl/Brgs 15X6.5-6 ●
2:1:1	140-4945	1	Wheel And Tire ASM 15X6.5-6
2:1:1:1	139-3624	1	Wheel Rim 6X4.5
2:1:1:2	5108	1	Valve
2:1:1:3	140-4946	1	Tire

Ref.	Part Number	Qty.	Description
2:1:2		1	Caster Axle ASM ●
2:1:2:1	126-5220	1	Axle-Caster
2:1:2:2	103-3051	1	Spacer-Nut
2:1:3	1-633585	2	Bearing-Cone, Taper
2:1:5	103-0063	2	Seal-Caster
2:2	103-2768	2	Guard-Seal
2:3	126-5389	1	Screw-HHF
2:4	99-5107	1	Nut-Lock

● Not serviced separately

Rear Wheel Assembly

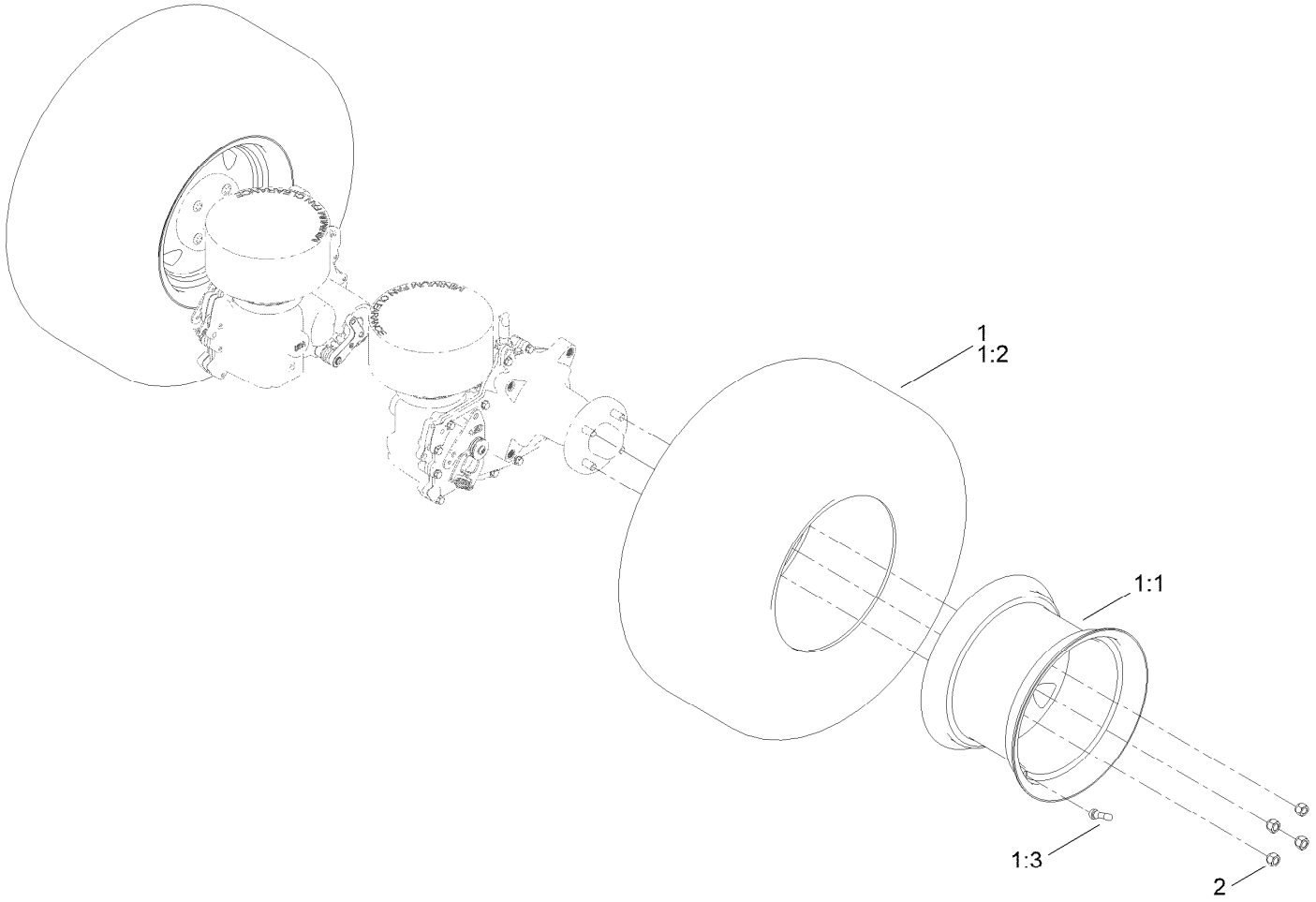

Rear Wheel Assembly (continued)

Ref.	Part Number	Qty.	Description
1	144-6620	2	Wheel And Tire ASM
1:1	144-6606	1	Wheel
1:2	140-7986	1	Tire
1:3	232-27	1	Stem-Valve
2	242-50	2	Nut-Lug

Electrical Assembly

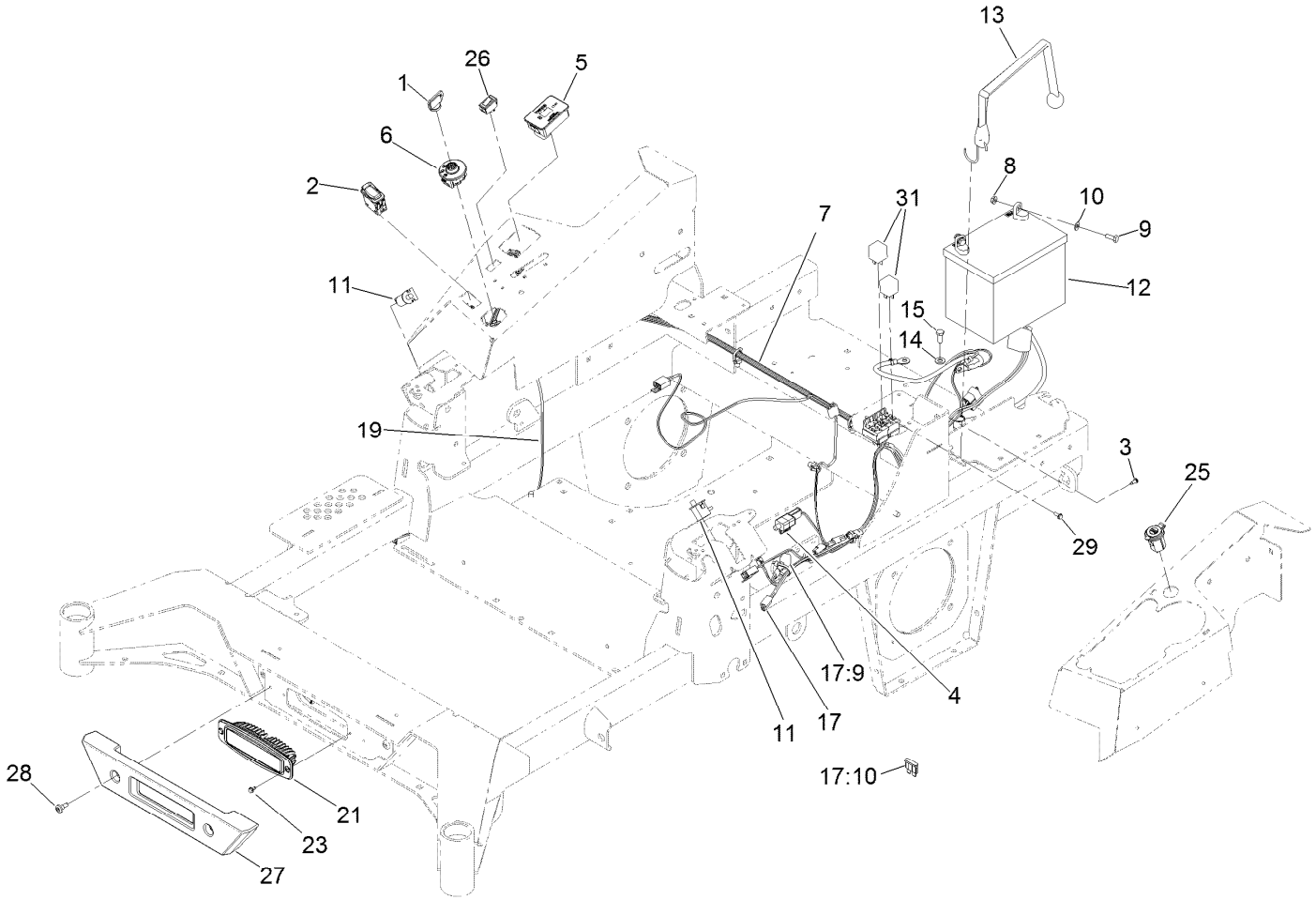

Electrical Assembly (continued)

Ref.	Part Number	Qty.	Description
1	1-603511	1	Keys-Ignition (Spare Pair)
1	63-8360	1	Key-Ignition
2	139-6368	1	Switch-Rocker, On-None-On
3	99-8445	1	Screw-HWH
4	110-6765	1	Switch
5	116-5609	1	Module ASM
6	137-4100	1	Switch-Ignition
7	139-8078	1	Harness-Wire
8	32128-33	2	Nut-HF
9	321-4	2	Screw-HH
10	3256-22	2	Washer-Flat
11	82-2190	2	Switch-Bail
12	104-8162	1	Battery
13	126-7627	1	Strap-Bungee
14	33094-00	1	Washer-Plain
15	33114-020	1	Screw-HH
17	140-1200	1	Harness-Wire, Deck Lift
17:9	103-3895	1	Diode
17:10	109101	1	Fuse-Blade, 20 Amp
19	140-1213	1	Harness-Wire, Light Kit
21	139-8089	1	Mount-Flush, Light
23	104-2065	2	Screw-HWH
25	140-7955	1	Port-Power, USB
26	92-8875	1	Switch-Rocker
27	140-4993	1	Bumper-Front
28	135-2015	2	Screw-Shoulder
29	32144-1	1	Screw-Taptite
31	1-643275	2	Relay

Wire Harness Assembly No. 139-8078

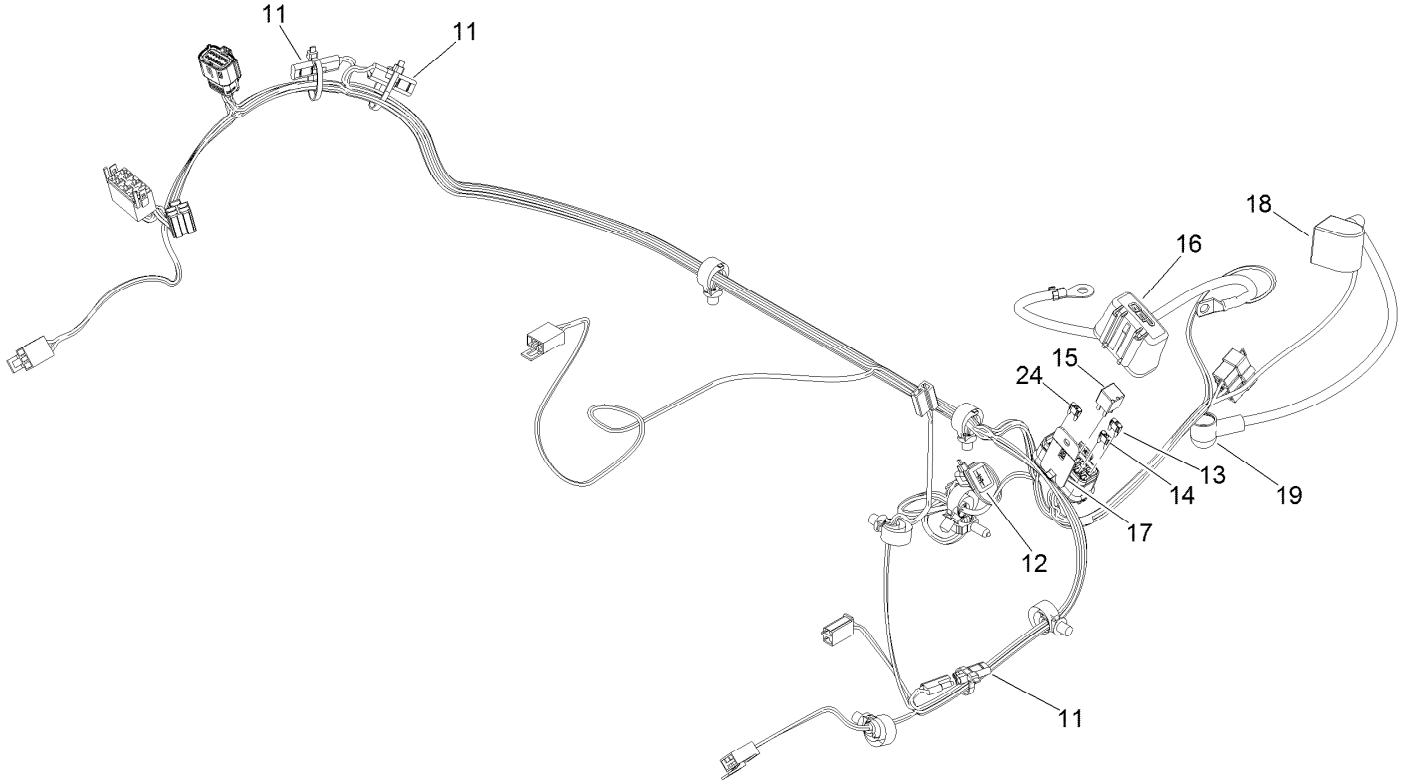

Wire Harness Assembly No. 139-8078 (continued)

Ref.	Part Number	Qty.	Description
11	116-0053	3	Cap-Plug
12	103-3895	1	Diode
13	121-8867	1	Fuse-Mini Blade, 15 Amp
14	121-8868	1	Fuse-Mini Blade, 20 Amp
15	126-3991	1	Relay-Micro
16	32180-176	1	Cover-Block, Fuse
17	32180-177	1	Clip-Mounting
18	126-8876	1	Insulator-Battery
19	1-543393	1	Insulator-Solenoid
24	121-8869	1	Fuse-Mini Blade, 25 Amp

Deck Lift Assembly

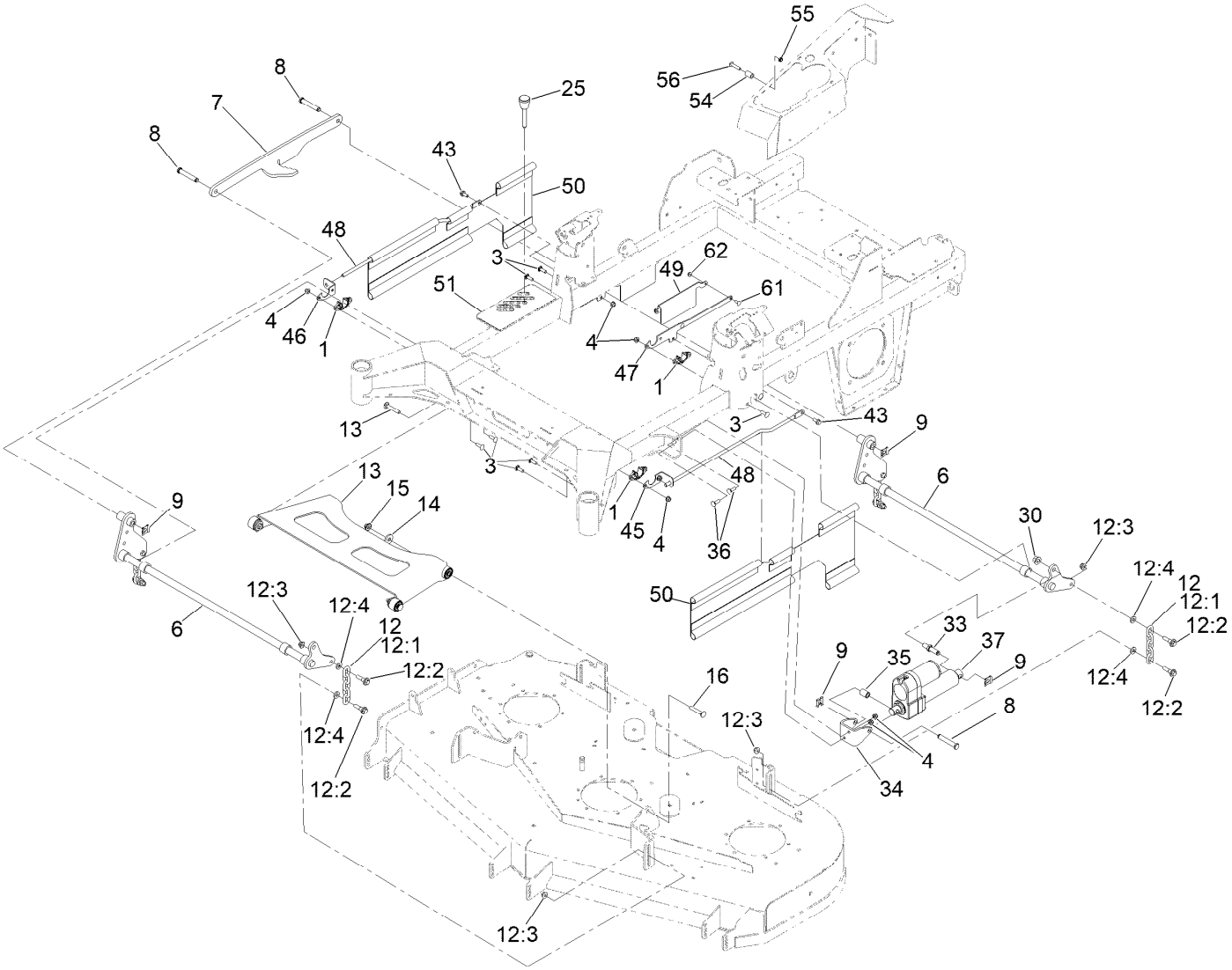

Deck Lift Assembly (continued)

Ref.	Part Number	Qty.	Description
1	115-5065	4	Bushing-Flange
3	3230-22	8	Screw-CARR
4	104-8300	14	Nut-HF, NI
6	140-4975-03	2	Deck Lift Shaft ASM [black]
7	126-4639-03	1	Link-Lift
8	126-9181	3	Pin-Clevis
9	138-8491	4	Clip-Pin
12	126-8877	4	Deck Chain ASM
12:1	1-633447	1	Chain-Lift, Deck
12:2	130-0742	2	Bolt-Shoulder
12:3	104-8301	2	Nut-HF, NI
12:4	43-0940	2	Spacer
13	140-1179	1	ASM-Deck Strut W/ Bushings
14	1-373034	2	Washer
15	109-6658	2	Nut-Flange, NI
16	3231-7	2	Screw-CARR
25	126-5401	1	Pin-HOC
30	99-5107	1	Nut-Lock
33	139-8135	1	Pin-Pivot, Actuator

Ref.	Part Number	Qty.	Description
34	147-0271-01	1	CYL Mount Plate
35	127-6751	1	Spacer-Aluminum
36	3230-2	2	Bolt-CARR
37	139-8111	1	Actuator-Linear
43	3234-47	2	Screw-HHF
45	140-4918	1	Bracket-Mount, Upper Front (LH)
46	140-4919	1	Bracket-Mount, Upper Front (RH)
47	145-1275	2	Bracket-Mounting, Upper
48	126-7760	2	Rod-Support, Upper
49	145-1276-03	2	Bracket-Flag
50	126-8561	2	Guard-Side
51	140-4927	1	Decal-HOC, MM
54	114-2754	1	Spacer
55	3296-47	1	Nut-Lock,NI
56	126-7439	1	Screw-Torx
61	3229-11	4	Screw-CARR
62	104-7201	4	Nut-HF, NI

Deck Strut Assembly No. 140-1179

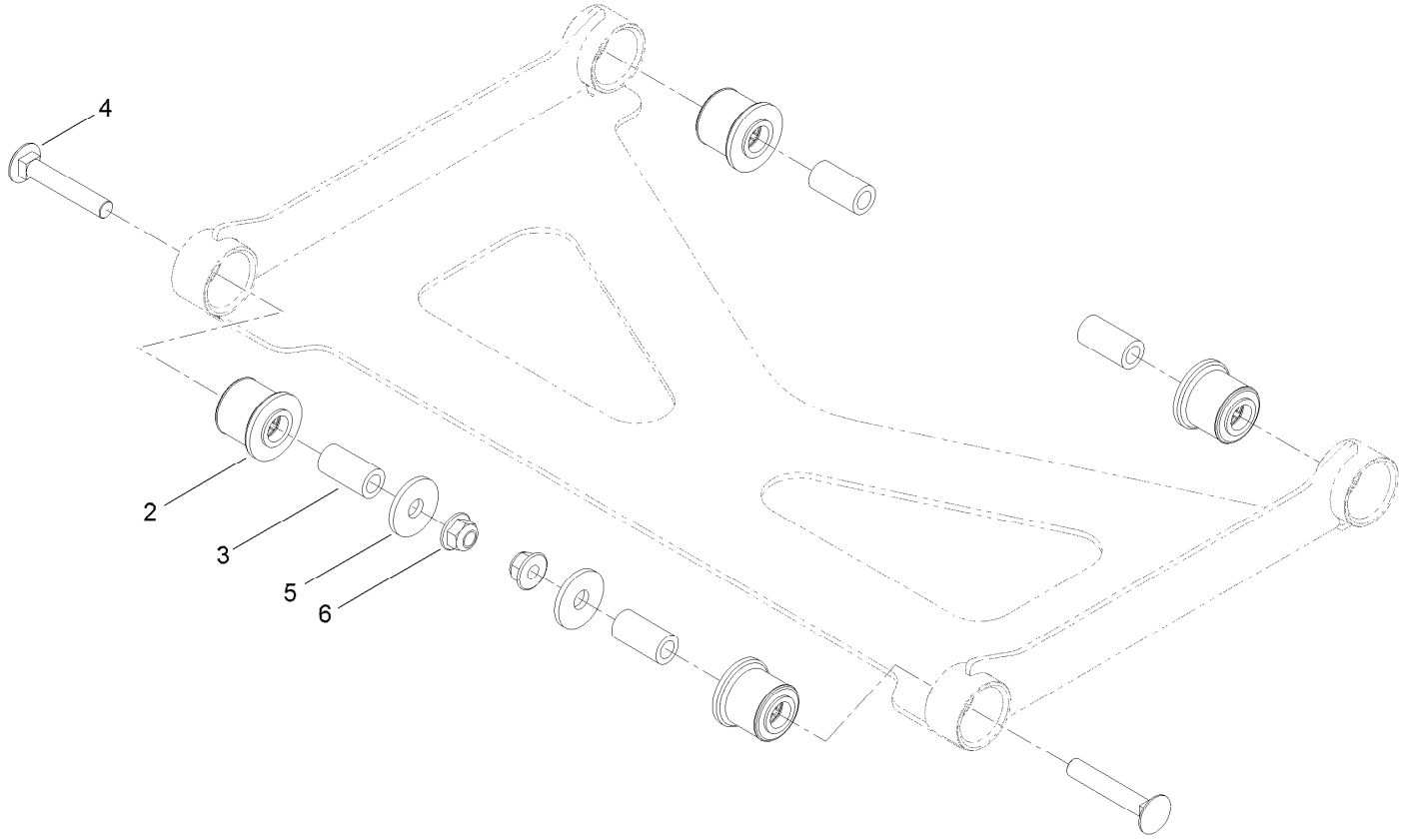

Deck Strut Assembly No. 140-1179 (continued)

Ref.	Part Number	Qty.	Description
2	126-8360	4	Bushing-Rubber, Suspension
3	108-6544	4	Spacer
4	3231-7	2	Screw-CARR
5	2844	2	Washer
6	104-8301	2	Nut-HF, NI

Engine, Clutch and Muffler Assembly

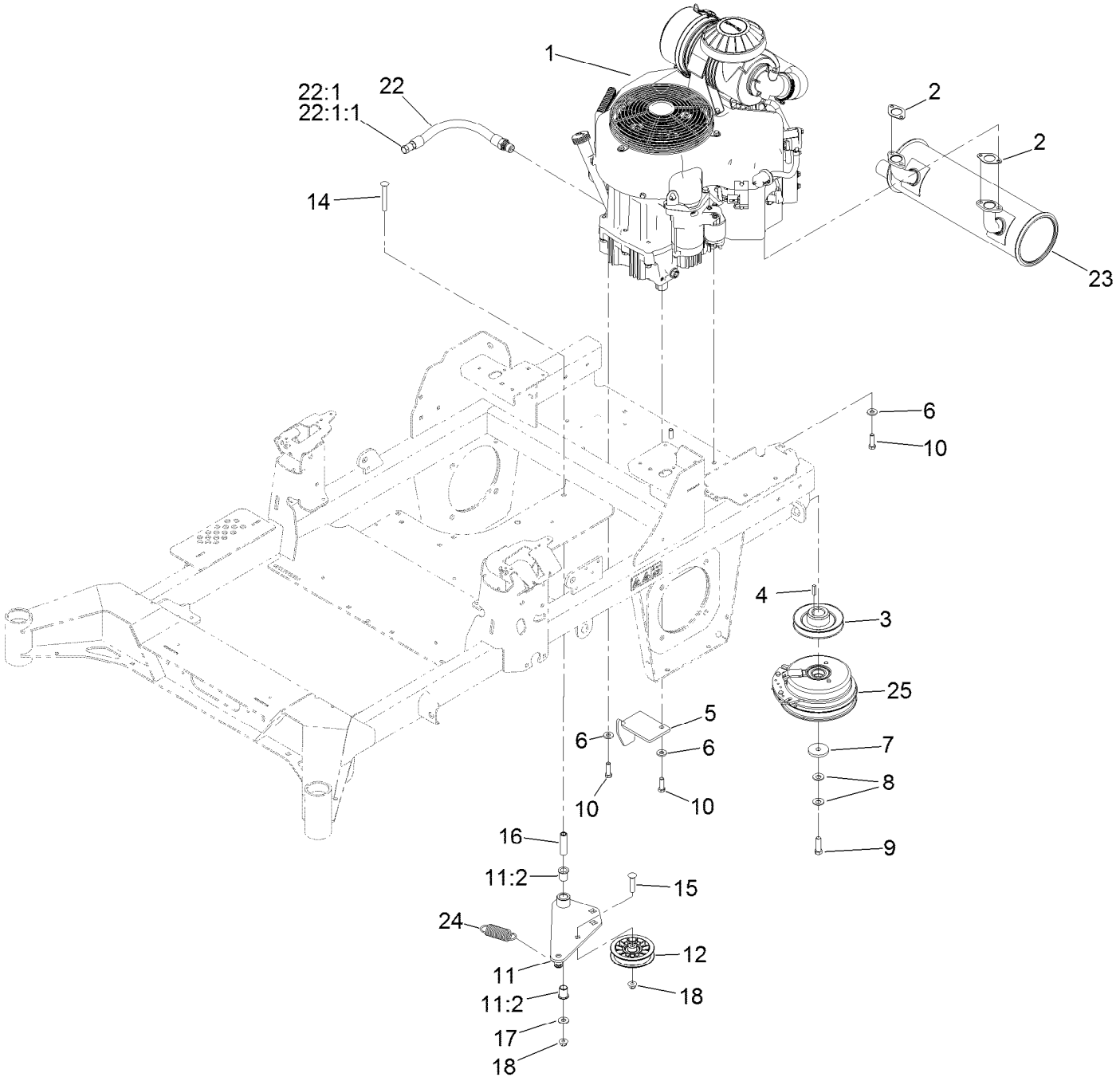

Engine, Clutch and Muffler Assembly (continued)

Ref.	Part Number	Qty.	Description
1	137-9243	1	Engine-Kawasaki, Fx801V-_s22-R
2	1-653313	2	Gasket-Exhaust
3	139-6702	1	Sheave, W/Hub
4	1-807259	1	Key
5	140-1190	1	Anchor-Clutch
6	98-5975	4	Washer-Belleville
7	109-6919	1	Washer-Clutch
8	1-603610	2	Washer-Spring
9	109-9761	1	Screw-HH
10	323-7	4	Screw-HH
11	144-2671	1	Idler Arm ASM
11:2	138-2573	2	Bushing-Flange
12	116-2456	1	Pulley-Flat Idler
14	3231-42	1	Screw-CARR
15	3231-29	1	Screw-CARR
16	139-6690	1	Bushing, Idler Pivot
17	3256-4	1	Washer-Flat
18	104-8301	2	Nut-HF, NI
22	116-4924	1	Engine Oil Drain Hose ASM
22:1	353-508	1	Plug-HH ●
22:1:1	237-42	1	O-Ring
23	139-1079	1	Muffler
24	1-653331	1	Spring-Idler
25	116-1604	1	Clutch

● Torque to 24-26 ft-lb

Seat Suspension Platform Assembly

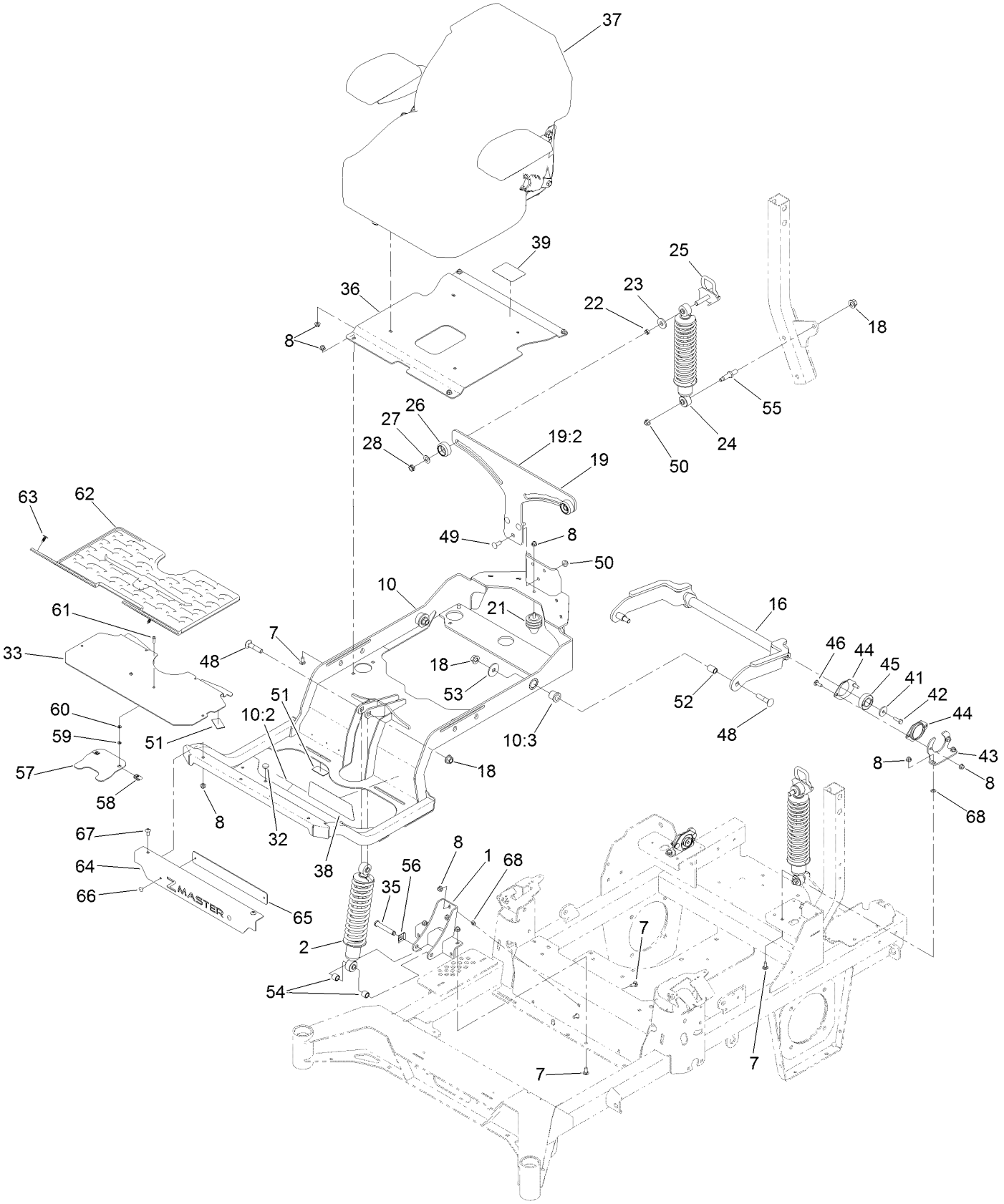

Seat Suspension Platform Assembly (continued)

Ref.	Part Number	Qty.	Description
1	139-6691-03	1	Mount-Shock, Lower [black]
2	136-1719	1	Shock ASM-Front
7	3230-23	8	Bolt-CARR
8	104-8300	23	Nut-HF, NI
10	140-4868	1	Subframe ASM
10:2	132-0871	1	Decal-Danger
10:3	127-6745	2	Bushing-Flange
16	127-6754-03	1	Arm-Trailing
18	99-5107	5	Nut-Lock
19	144-2602	1	Bracket-Mounting
19:2	132-5067	1	Decal-Adjustment, Ride
21	126-5491	1	Isolator
22	133-5109	2	Bearing-Sleeve
23	131-4699	2	Washer-Plastic
24	133-1815	2	Shock/Spring ASM
25	136-9017	2	Cam Lock ASM
26	136-5636	2	Knob-Lock, Cam
27	3-6803	2	Washer-Adjusting
28	3296-45	2	Nut-Hex
32	1-513658	2	Bumper
33	144-0381-01	1	Floorpan
35	126-9181	1	Pin-Clevis
36	140-1197-03	1	Pan-Seat
37	144-2631	1	Seat ASM-Standard
38	144-0437	1	Decal-Myride
39	144-2669	1	Decal-Service Aid
41	105-3048	2	Washer-Flat
42	116-0648	2	Screw-HH, Thread Locking
43	127-6759-03	2	Bracket-Bearing
44	127-6743	4	Housing-Bearing, Flange
45	1-653346	2	Bearing
46	3230-10	4	Bolt-CARR
48	127-6768	3	Screw-CARR
49	3231-22	3	Screw-CARR
50	104-8301	5	Nut-HF, NI
51	130-0733	4	Pad-Rubber
52	127-6751	2	Spacer-Aluminum
53	86-1990	2	Washer-Thrust
54	140-4869	2	Spacer-Tube
55	133-4401	2	Bolt-Shoulder
56	138-8491	1	Clip-Pin
57	119-0395-03	1	Adapter-Captive
58	107069	2	Clip
59	32115-15	2	Nut-Push
60	3256-60	2	Washer-Flat
61	3274-69	2	Screw-HSBH
62	144-0355	1	Floormat-Myride
63	117-2382	2	Plug-Plastic
64	144-0382-03	1	Plate-Badge
65	144-0422-01	1	Plate-Backer
66	130-8451	2	Rivet-Trifold
67	126-6268	2	Screw-Torx
68	117-2749	6	Nut-Push

Seat Assembly No. 144-2631

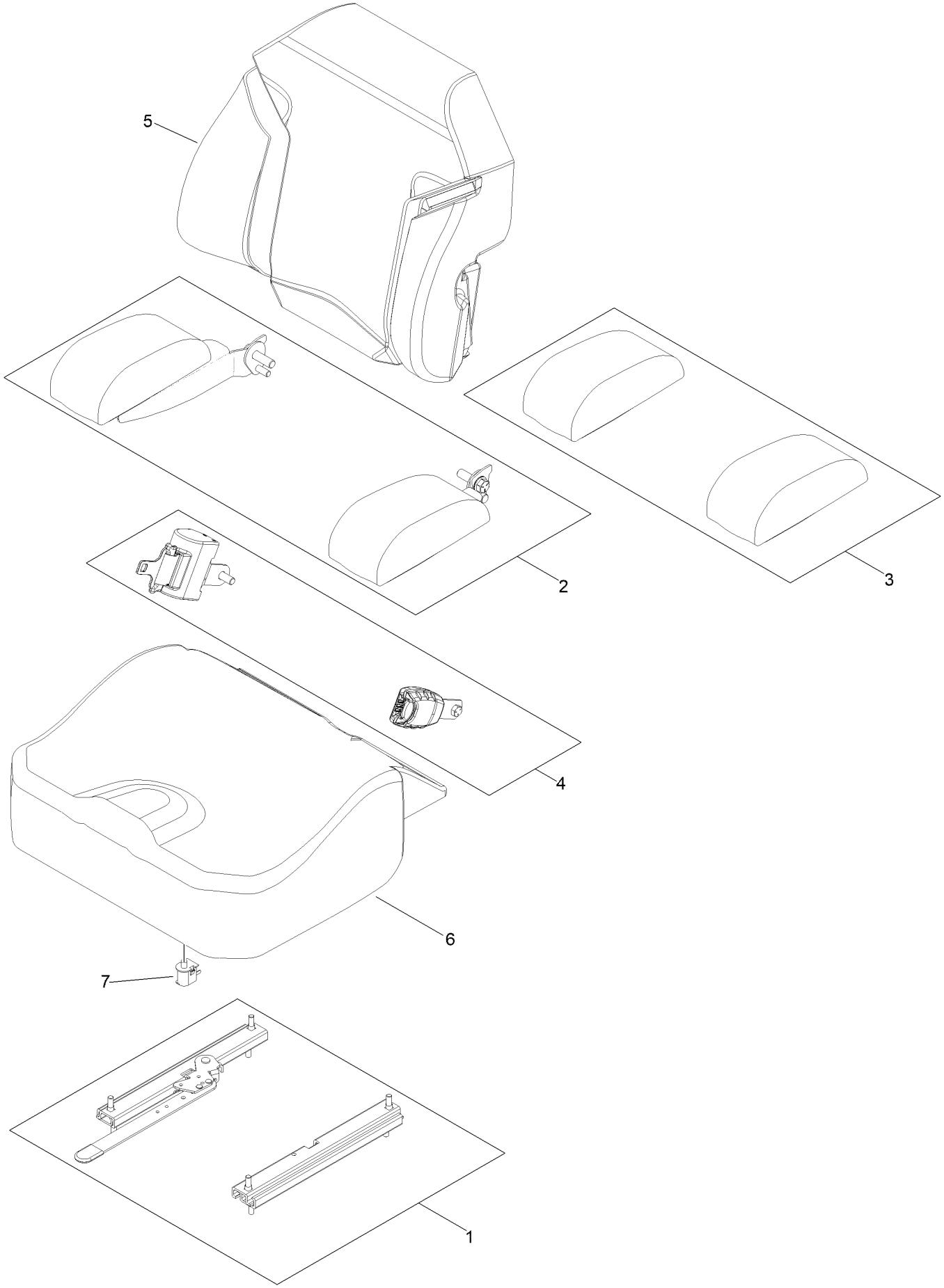

Seat Assembly No. 144-2631 (continued)

Ref.	Part Number	Qty.	Description
1	109-9801	1	Seat Track Set
2	145-3641	1	Armrest Kit
3	145-3642	1	Pads-Armrest
4	130-2854	1	Seat Belt Kit
5	145-3643	1	Cover-Back, Seat
6	145-3644	1	Cover-Bottom, Seat
7	82-2190	1	Switch-Bail

Decal Assembly

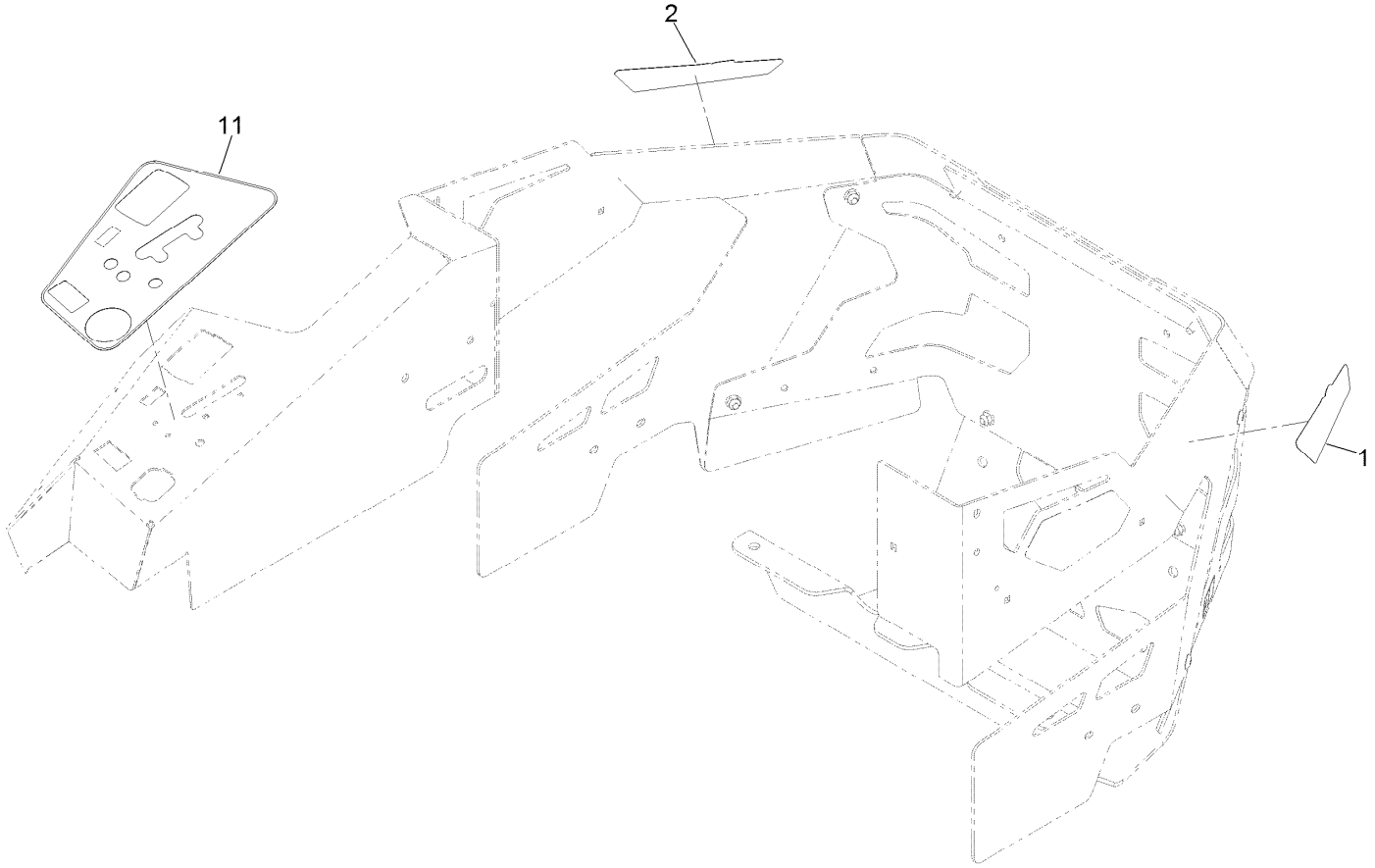

Decal Assembly (continued)

Ref.	Part Number	Qty.	Description
1	144-0438	1	Decal - Pro
2	144-0439	1	Decal - Pro
11	144-6552	1	Decal-Panel, Te Control

Deck Assembly

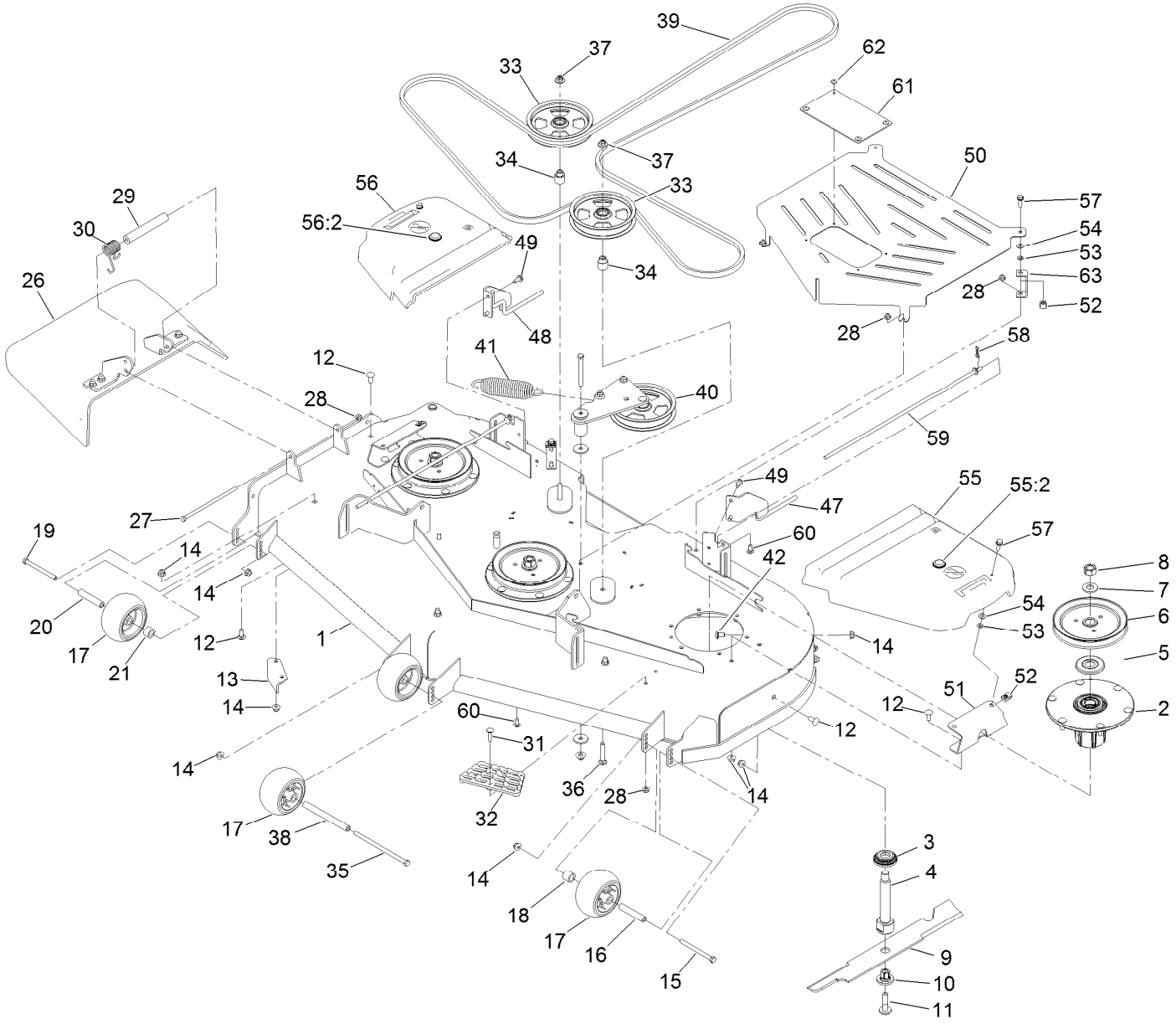

Deck Assembly (continued)

Ref.	Part Number	Qty.	Description
1	144-6588	1	Deck Decal ASM
2	137-9780	3	Spindle ASM
3	137-9784	3	Guard-Bottom
4	138-6045	3	Shaft-Spindle
5	103-1330	3	Guard-Bearing, Top
6	138-6059	3	Sheave-Drive, Blade
7	103-2802	3	Washer
8	116-7306	3	Nut-Hex
9	140-1240	3	Blade
10	137-9787	3	Bushing-Hex
11	109-9220	3	Screw-Sems
12	3231-27	10	Screw-CARR
13	107-8541-01	1	Baffle-Discharge
14	104-8301	34	Nut-HF, NI
15	323-23	1	Screw-HH
16	98-7912	1	Tube-Spanner
17	1-603299	4	Roller-Scalp, Anti
18	98-7913	1	Tube-Spacer
19	323-17	1	Screw-HH
20	133-2129	1	Tube-Shafting
21	133-2128	1	Tube-Spacer
26	144-2635	1	Rubber Deflector ASM
27	322-50	1	Screw-HH
28	104-8300	6	Nut-HF, NI
29	105-4622	1	Spacer
30	108-4052	1	Spring-Torsion
31	3230-3	1	Screw-CARR
32	126-4781-03	1	Step-Deck
33	132-9424	2	Pulley-Idler, Flat

Ref.	Part Number	Qty.	Description
34	139-8061	2	Bushing, Idler
35	108-5388	1	Screw-HH
36	3231-7	2	Screw-CARR
37	109-6658	2	Nut-Flange, NI
38	98-5967	1	Spacer-Wheel
39	144-0357	1	Belt-V
40	139-1087	1	Idler Arm ASM
41	116-6317	1	Spring-Extension
42	3231-21	3	Screw-CARR
47	140-4913	1	Support-Lower LH
48	140-4914	1	Support-Lower RH
49	32144-70	4	Screw-HWHTF
50	145-1271-03	1	Guard-Center Belt 60
51	114-5882-01	2	Bracket-Cover, Belt
52	94-2413	4	Nut-U
53	117-2749	4	Nut-Push
54	73-0041	4	Washer-Thrust
55	117-7816	1	LH Belt Cover ASM
55:2	117-3824	1	Plug-Plastic
56	117-7815	1	RH Belt Cover ASM
56:2	117-3824	1	Plug-Plastic
57	3234-29	4	Screw-HHF
58	119-1415	2	Pin-Cotter, Locking
59	140-8027	2	Rod-Skirt, Lower
60	3230-23	4	Bolt-CARR
61	144-0420	1	Shield-Rubber
62	132-5064	4	Rivet-Pop
63	126-9646	2	Bracket-Guard

Deck Decal Assembly No. 144-6588

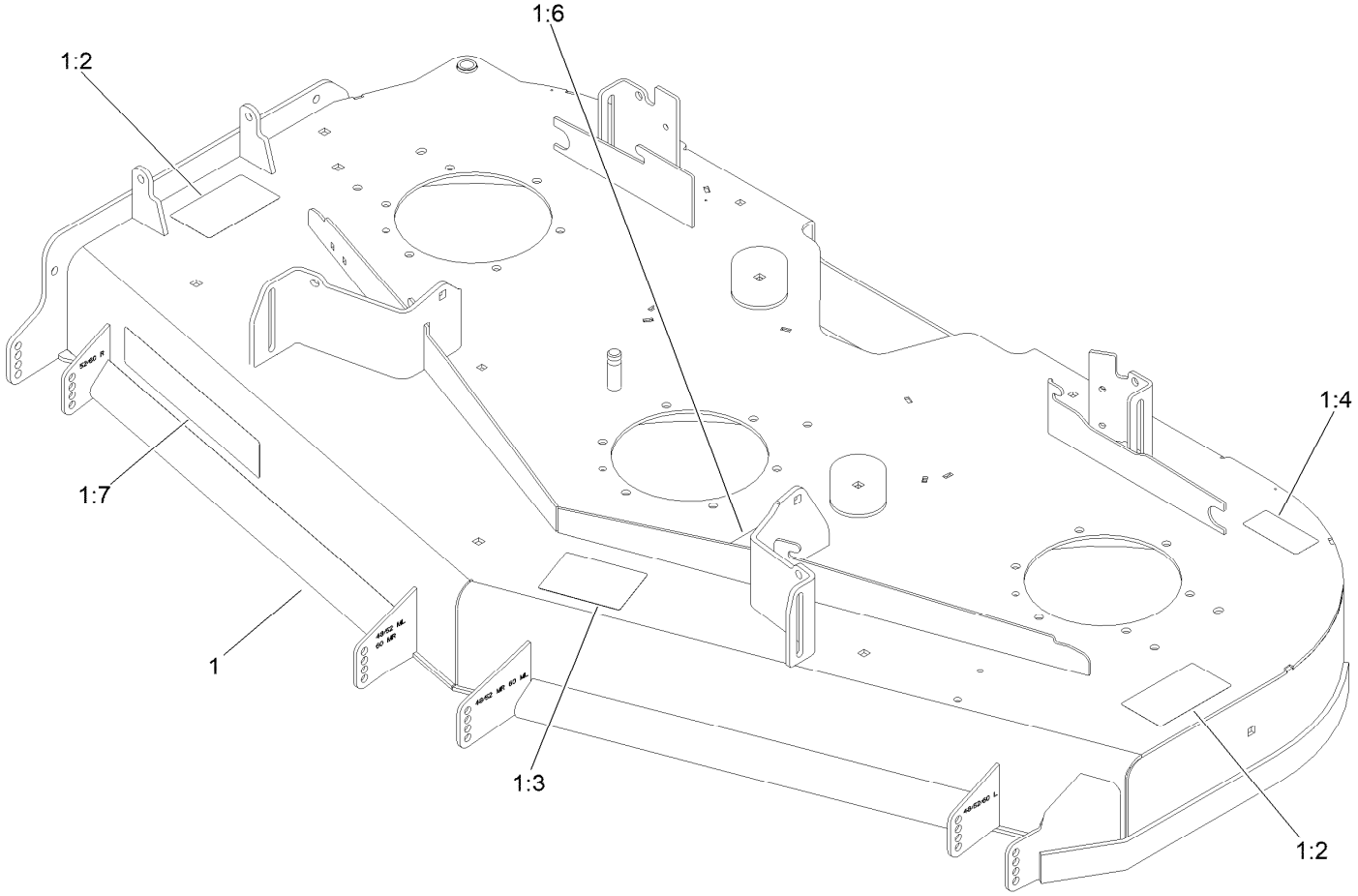

Deck Decal Assembly No. 144-6588 (continued)

Ref.	Part Number	Qty.	Description
1		1	Deck ASM W/Decals 60 ●
1:2	117-3848	2	Decal-Danger
1:3	127-0326	1	Decal-Scalp, Anti
1:4	116-8283	1	Decal-Torque, Bolt
1:6	109-6035	1	Decal-Routing, Belt
1:7	107-1619	1	Decal

● Not serviced separately

Spindle Assembly No. 137-9780

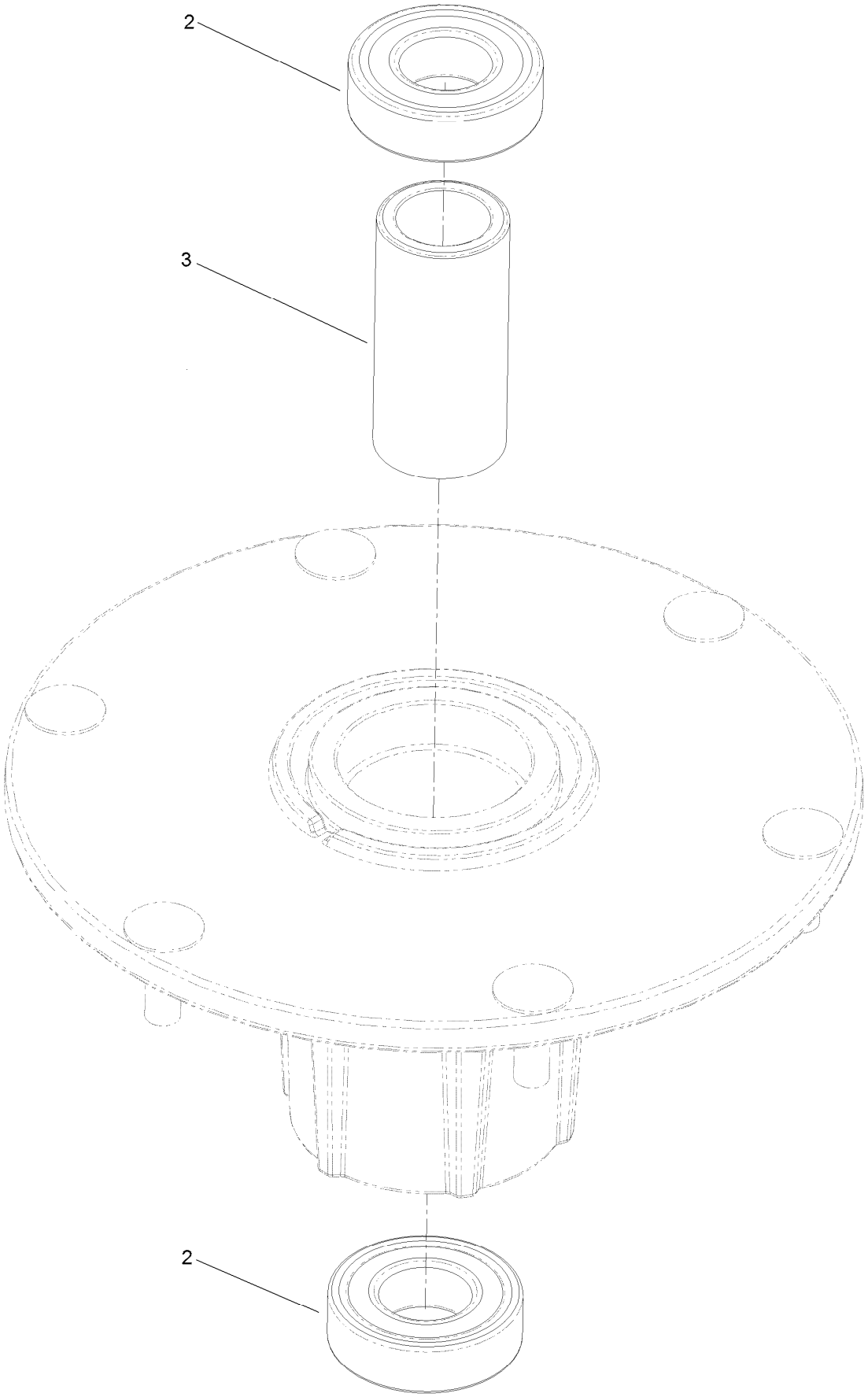

Spindle Assembly No. 137-9780 (continued)

Ref.	Part Number	Qty.	Description
2	116-0720	2	Bearing-Ball
3	138-6042	1	Spacer-Bearing

Deflector Assembly No. 144-2635

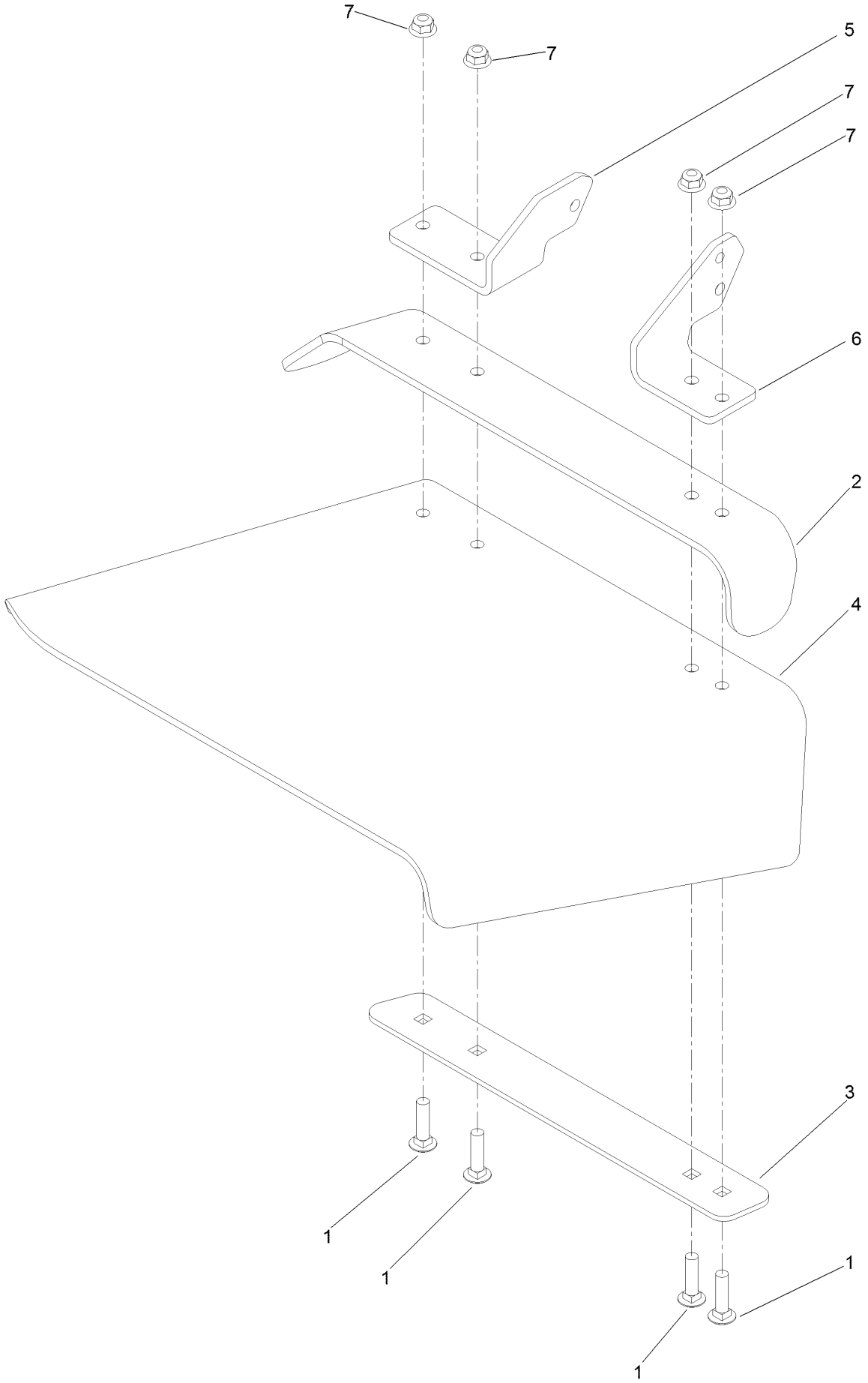

Deflector Assembly No. 144-2635 (continued)

Ref.	Part Number	Qty.	Description
1	3231-4	4	Screw-CARR
2	106-3246-01	1	Deflector
3	106-3248-03	1	Strap-Discharge
4	139-8114	1	Deflector-Deck, Rubber
5	108-4059-01	1	Plate-Hinge, Rear
6	106-3253-01	1	Plate-Hinge, Front
7	104-8301	4	Nut-HF, NI

Idler Arm Assembly No. 139-1087

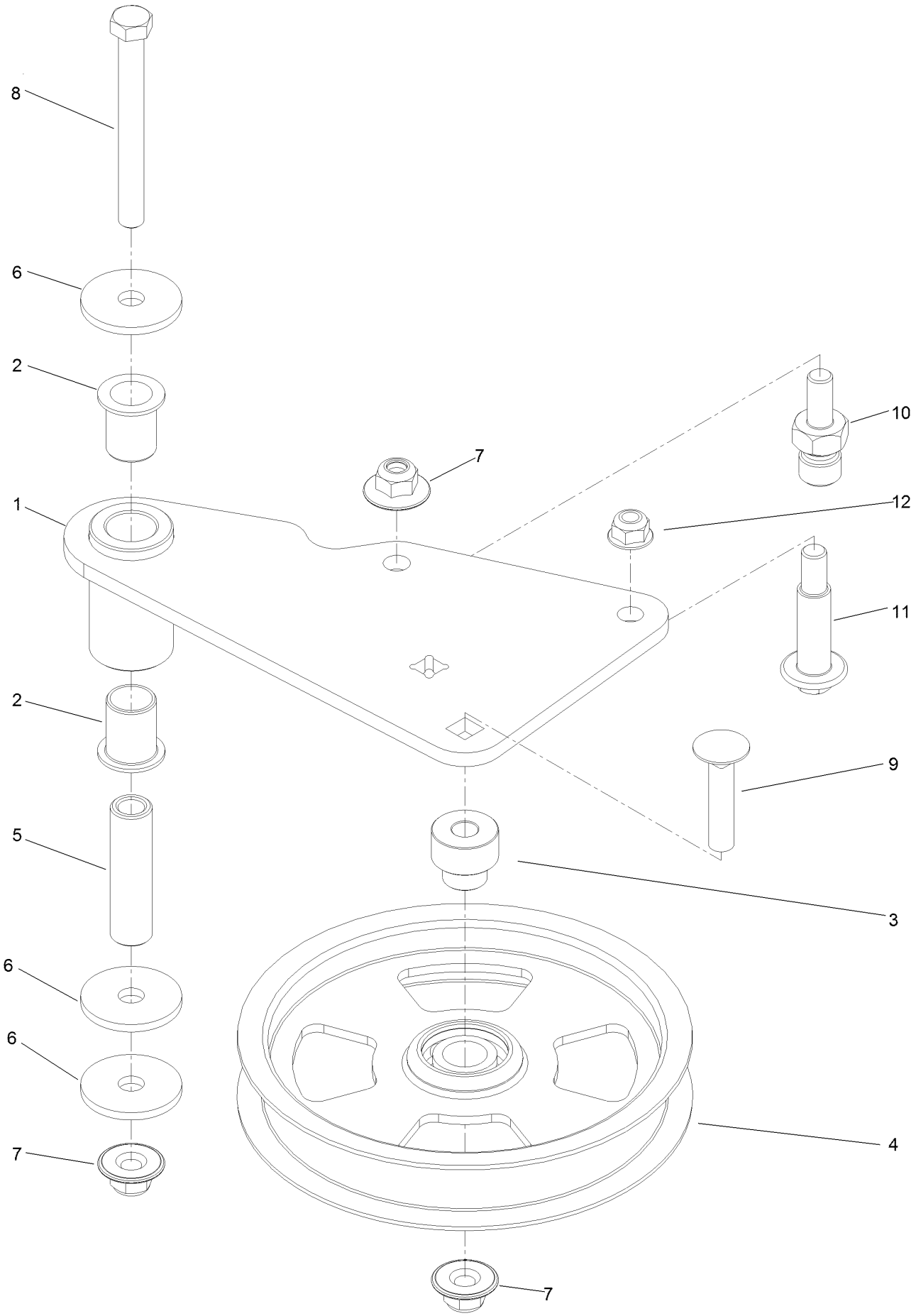

Idler Arm Assembly No. 139-1087 (continued)

Ref.	Part Number	Qty.	Description
1	139-1086	1	Idler Arm ASM
2	138-2573	2	Bushing-Flange
3	139-8060	1	Bushing, Idler
4	132-9424	1	Pulley-Idler, Flat
5	139-6690	1	Bushing, Idler Pivot
6	1-213069	3	Washer
7	109-6658	3	Nut-Flange, NI
8	323-15	1	Screw-HH
9	3231-5	1	Screw-CARR
10	132-4729	1	Anchor-Spring, Short
11	136-9028	1	Bolt-Shoulder, HWH
12	104-8301	1	Nut-HF, NI

Attachments and Accessories

For 74056TE 152cm Z Master 4000 Series Riding Mower

Product Name	Model/Part
Anti-Scalp Kit (Trim Side)	108-4140
Hypr-Oil 500 (quart)	114-4713
Hypr-Oil 500 (gallon)	114-4714
Hypr-Oil 500-5 (5 gallon)	114-4715
Striper Kit	126-7882
Jack Kit	127-6666
Recycler Kit-G3/Grandstand/GM 3300 60	139-6655
Blade-20.5 High Flow	140-1240
Blade-20.50 Atomic	140-1241
Blade-20.50 Medium Flow	140-4853
Blade-20.50, Low Flow	140-4854
Blade-20.50 Recycler	140-4855
6 Pack-Blade, 20.5 High Flow	140-4877
6 Pack-Blade, 20.5 Med Flow	140-4878
6 Pack-Blade, 20.5 Low Flow	140-4879
6 Pack-Blade, 20.5 Atomic	140-4880
6 Pack-Blade, 20.5 Recycler	140-4881
Trimmer Mount	144-2665
Kit, Jack Mount	144-2676
Hardtop Sun Canopy	144-3719
60" Chute Gate Kit	144-6572
60 CE Compliance Kit [4000]	145-1263
Asm-Semi Pneumatic 15x6.50-6	145-1919
Handle Extension Kit	145-3615
Spark Arrestor Screen	75-6880
Z 4000 Bagger Kit	78463
Z 4000 60in Completion Kit	78466

Notes:

TORO®

Count on it.