FORM NO. 3311-419

TORO®

MODEL NO. 30573-90001 & UP
MODEL NO. 30570-90001 & UP

PARTS CATALOG

48" SNOWTHROWER WITH ADAPTER KIT

(GROUNDS MAINTENANCE TRACTOR)

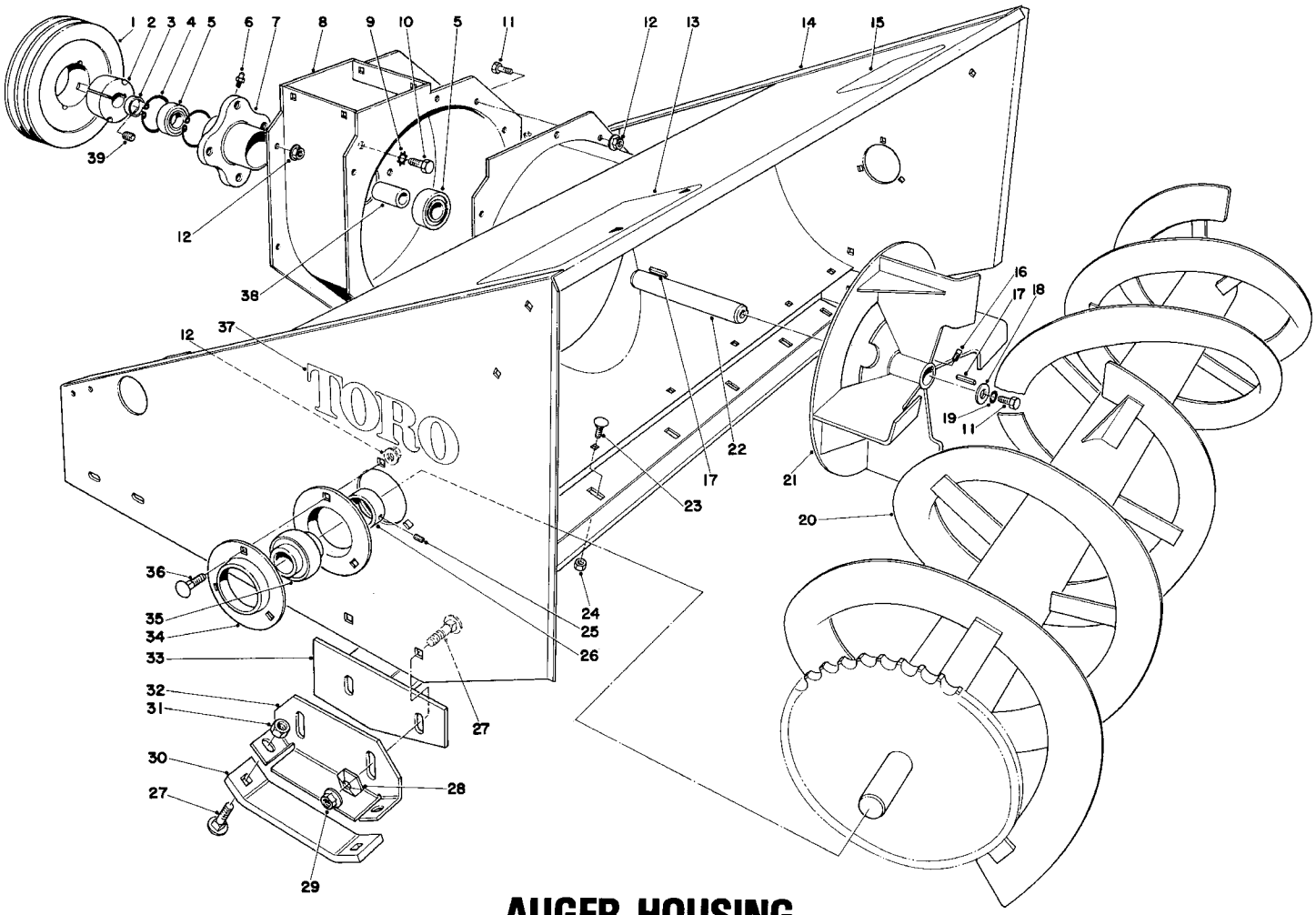

AUGER HOUSING

Ref. No.	Part No.	Description	No. Used
1	37-5100	Pulley Taper Lock	1
2	37-5150	Taper Lock Bushing(Incl.Ref.#39)	1
3	37-5170	Spacer	1
4	32151-20	Snap Ring	2
5	251-276	Bearing	2
6	302-11	Grease Fitting	1
7	32-4950	Housing Spindle	1
8	39-5030	Blower Housing	1
9	3255-2	Lockwasher	4
10	3213-20	Capscrew	4
11	322-3	Capscrew	9
12	32128-20	Flange Nut	16
13	39-5020	Decal — Rear Weight	1
14	39-5010	Auger Housing	1
15	29-6350	Decal — Warning	1
16	3243-1	Square Head Setscrew	2
17	31-0700	Square Key	2
18	3-6715	Flat Washer	1
19	3253-4	Lockwasher	1
20	32-6140	Auger	1

Ref. No.	Part No.	Description	No. Used
21	32-6130	Impeller	1
22	37-5240	Shaft — Impeller	1
23	3230-19	Carriage Bolt	7
24	3296-47	Locknut	7
25	3245-1	Set Screw	2
26	251-77	Locking Collar	2
27	3231-2	Carriage Bolt	8
28	3290-224	Pyramidal Lockwasher	4
29	32128-18	Flange Nut	4
30	37-5110	Skid — Shoe	2
31	32152-2	Locknut	4
32	37-4950	Skid — Mount Plate	2
33	37-5380	Scraper	1
34	251-287	Flange	4
35	251-253	Bearing (Incl. Ref. #25 & 26)	2
36	3230-18	Carriage Bolt	6
37	27-4600	Decal — Toro	2
38	31-0540	Sleeve	1
39	3247-4	Set Screw Socket Hd. Cup Point	2

COPYRIGHT © ALL RIGHTS RESERVED
The Toro Company — 1979

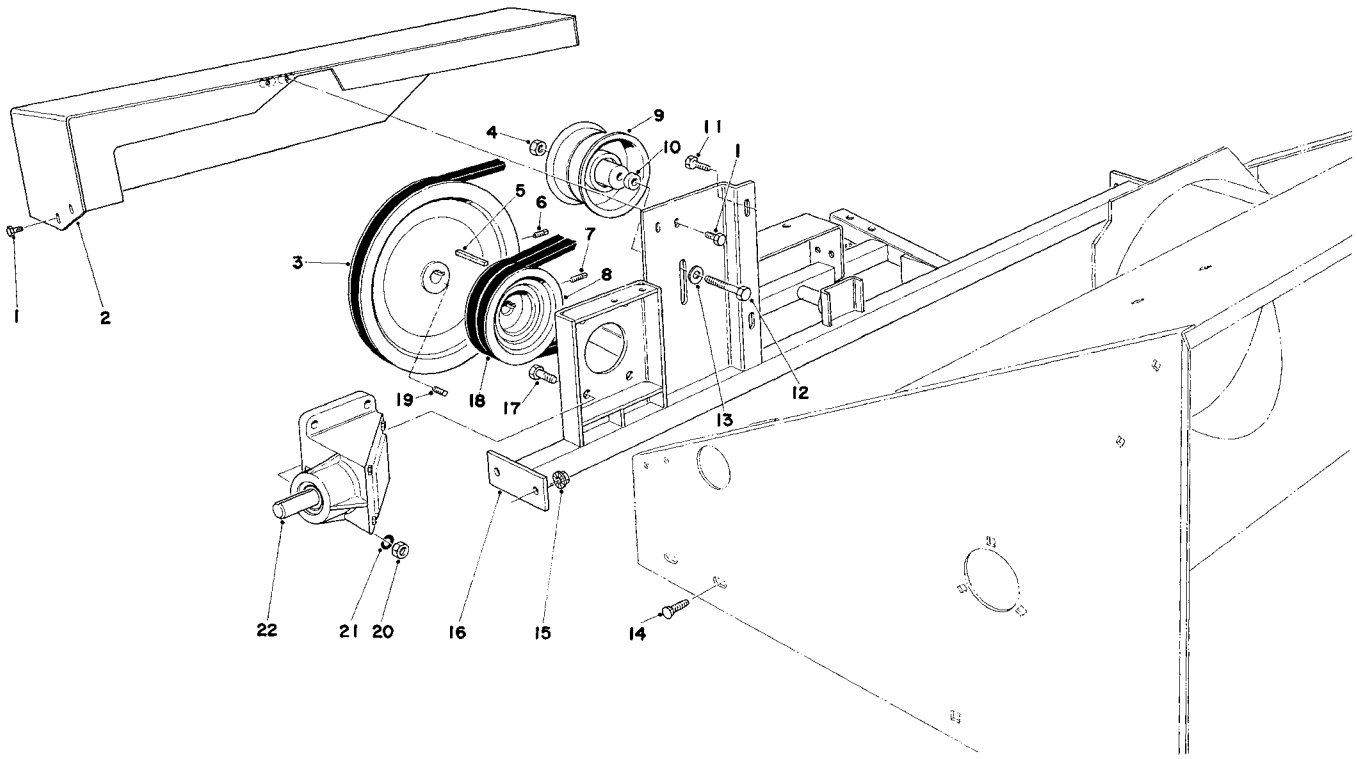

CROSS FRAME & PULLEY ASSEMBLIES

Ref. No.	Part No.	Description	No. Used
1	3234-13	Flange Screw	4
2	37-5510	Belt Shield	1
3	32-4480	Sheave	1
4	32152-2	Locknut	1
5	3-0971	Key	1
6	3242-2	Sq. Hd. Setscrew	1
7	3242-6	Sq. Hd. Setscrew	2
8	37-5090	Pulley – Gear Box	1
9	37-5760	Idler Pulley	1
10	37-5210	Spacer – Idler	1
11	322-3	Capscrew	2

Ref. No.	Part No.	Description	No. Used
12	323-11	Capscrew	1
13	3256-3	Flatwasher	1
14	3231-30	Carriage Bolt	4
15	3290-357	Hex Locknut	4
16	37-5400	Cross Brace	1
17	323-7	Capscrew	4
18	37-5670	V-Belt (Matched Set of 2)	1
19	3242-4	Sq. Hd. Setscrew	1
20	3217-7	Hexnut	4
21	3253-21	Lockwasher	4
22	37-5410	Gear Box Assembly	1

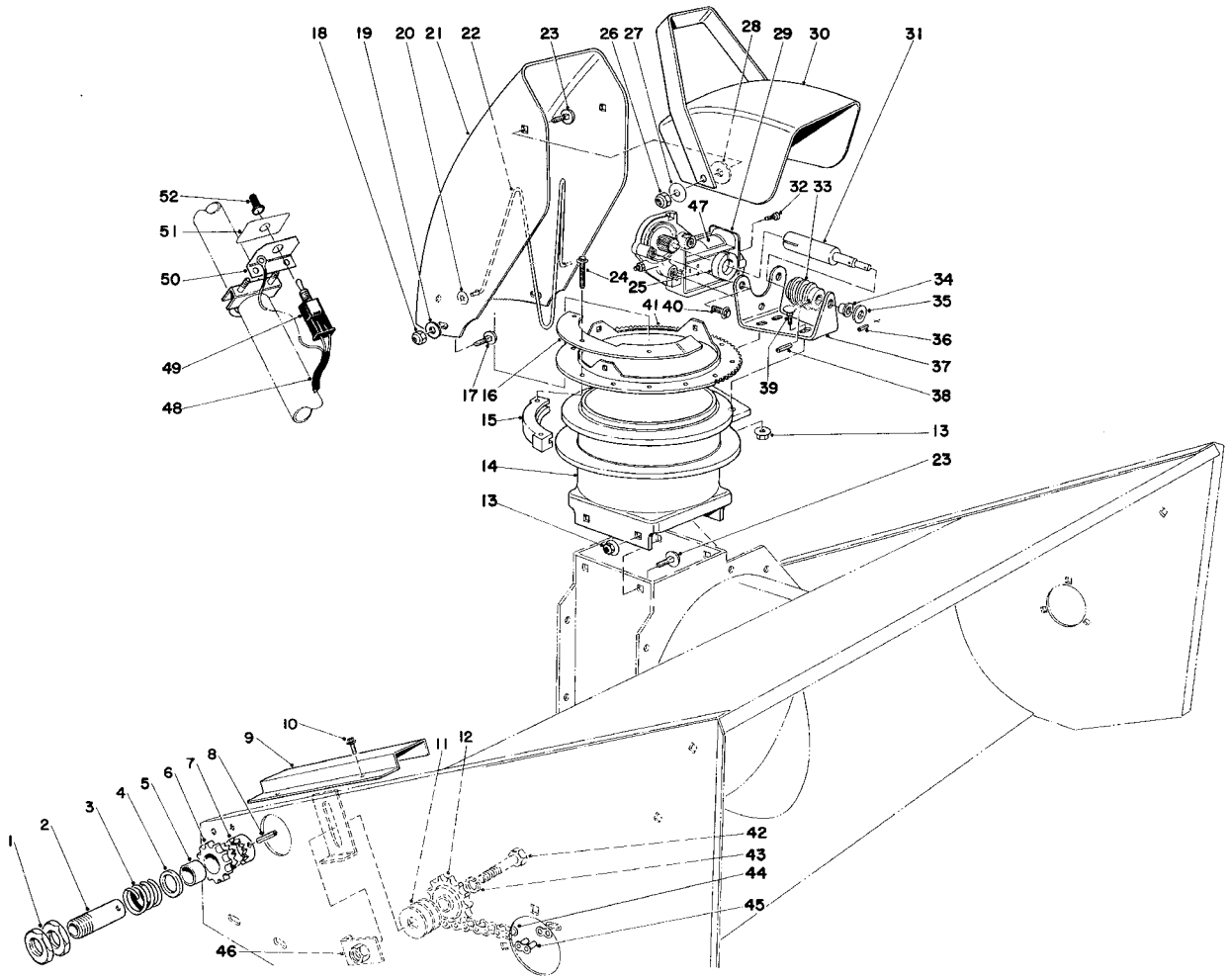

CHUTE ASSEMBLY

Ref. No.	Part No.	Description	No. Used
1		Nut – Thin	2
2		Clutch Sleeve	1
3		Spring Compression	1
4		Spacer	1
5		Bushing	1
6		Clutch Sprocket	1
7		Clutch Collar	1
8	32121-34	Roll Pin	1
9	32-1620	Chain Cover	1
10	32104-76	Self-Tapping Screw	2
11	3256-7	Flatwasher	3
12	30-0090	Idler Sprocket	1
13	3290-357	Locknut	7
14	39-4870	Chute Transition	1
15	25-5450	Swivel Block	6
16	39-4900	Stop-Chute Rotator	1
17	3230-18	Carriage Bolt	3
18	3296-47	Locknut	3
19	3256-23	Flatwasher	3
20	3290-326	Pushnut	2
21	25-5440	Upper Chute	1
22	12-2040	Chute Wire	1
23	3231-27	Carriage Bolt	6
24	27-0220	Special Screw	12
25	39-4940	Collar	1
26	32152-2	Locknut	2
27	3290-340	Belleville Washer	2

Ref. No.	Part No.	Description	No. Used
28	20-4320	Rubber Washer	2
29	39-4920	Gearmotor	1
30	11-7120	Deflector	1
31	39-4930	Shaft – Worm Gear	1
32	3274-26	Socket Head Screw	1
33	8-8600	Worm Gear	1
34	256-255	Bushing	1
35	3256-1	Flatwasher	2
36	32121-20	Roll Pin	1
37	39-4910	Motor Mount	1
38	32121-50	Roll Pin	1
39	3231-2	Carriage Bolt	3
40	3234-13	Flange Screw	3
41	39-4890	Ring – Chute Swivel	1
42	327-6	Capscrew	1
43	3253-8	Lockwasher	1
44	30-0160	Chain – Roller	1
45	2710-11	Connecting Link	1
46	30-0450	Nut Plate	1
47	40-0490	Decal – Chute Direction	1
48	39-4990	Wire Harness	1
49		Toggle Switch	1
50		Toggle Switch Mount	1
51	39-4970	Decal – Chute Rotation	1
52	218-473	Toggle Switch Boot	1
*	37-5640	Slip Clutch (Incl. Ref. #1-8)	1

*Not Illustrated

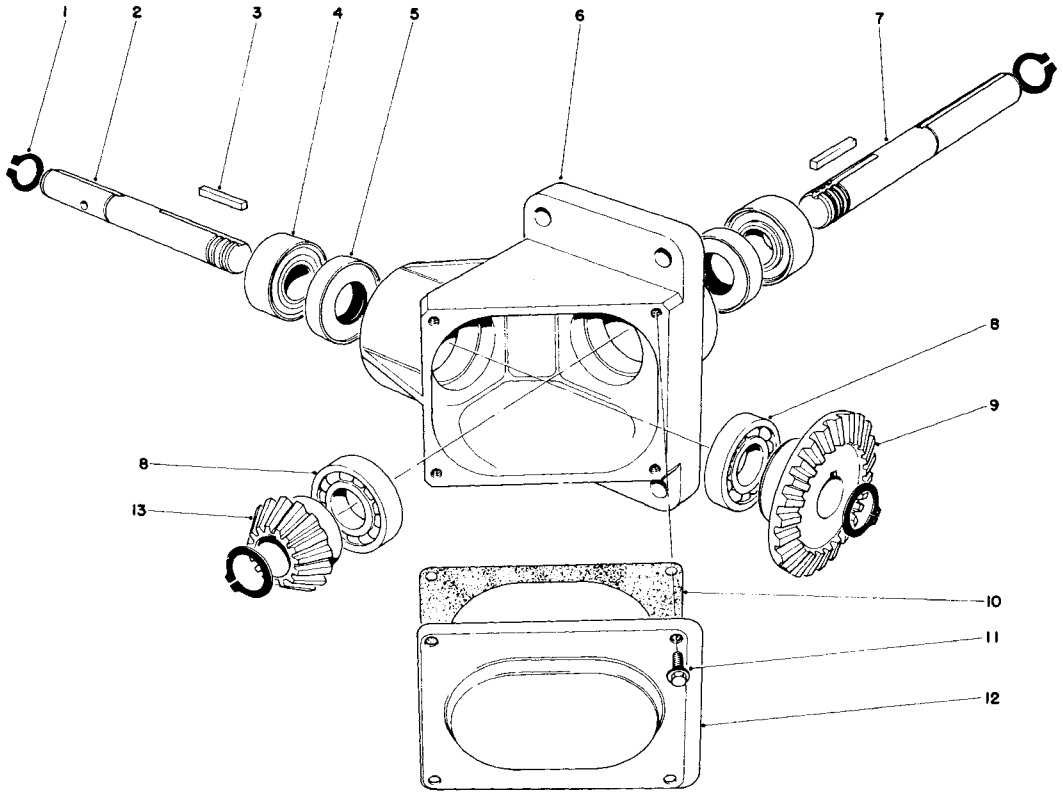

GEAR BOX ASSEMBLY

Ref. No.	Part No.	Description	No. Used
1	32120-72	Retaining Ring	4
2	30-0590	Shaft	1
3	30-0660	Key	2
4	30-0630	Bearing	2
5	30-0640	Oil Seal	2
6	30-0650	Housing	1
7	37-5840	Shaft	1

Ref. No.	Part No.	Description	No. Used
8	30-0620	Bearing	2
9	30-0670	Gear	1
10	30-0680	Gasket – Cover Plate	1
11	12-3270	Screw Special	4
12	30-0690	Cover Plate	1
13	30-0600	Gear	1

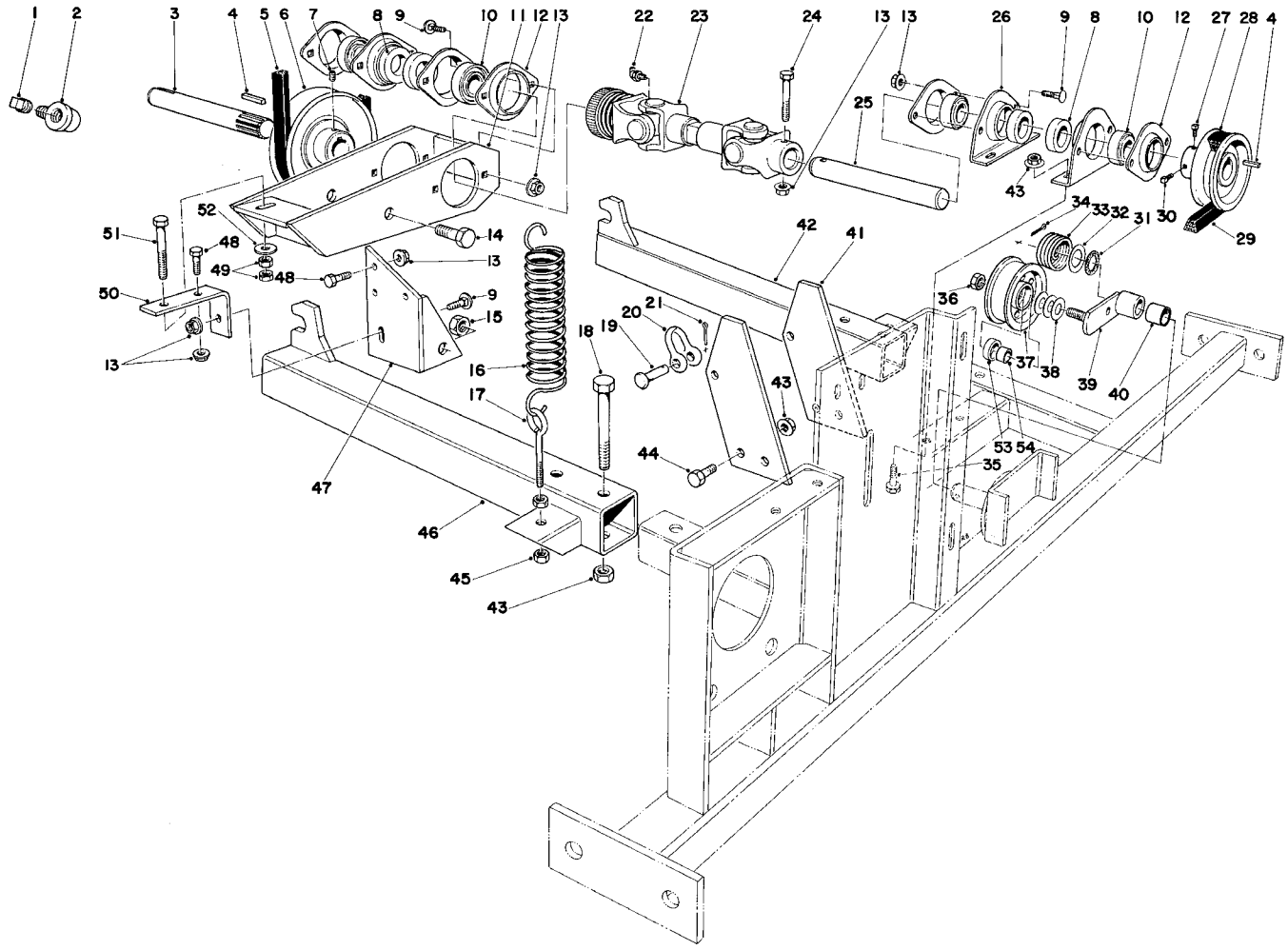

ADAPTER KIT MODEL NO. 30573

Ref. No.	Part No.	Description	No. Used
1	281-3	Pipe Plug	1
2	30-1080	90° Elbow	1
3	30-0230	Jackshaft	1
4	5-7280	Key	2
5	30-0910	V-Belt	1
6	32-1780	Sheave	1
7	3246-4	Slotted Head Set Screw	2
8	251-77	Collar	4
9	3230-1	Carriage Bolt	9
10	251-253	Bearing (Incl. Ref. #8)	4
11	32-4610	Bearing Support	1
12	251-285	Flange	6
13	32128-20	Flange Nut	14
14	325-5	Capscrew	2
15	32128-23	Locknut	2
16	30-1020	Extension Spring	2
17	30-0980	Eyebolt	2
18	323-11	Capscrew	4
19	283-1	Clevis Pin	1
20	282-4	Clevis	1
21	3272-6	Cotter Pin	1
22	21-5980	Grease Fitting	2
23	32-1530	Power Take-Off Shaft	1
24	322-10	Capscrew	1
25	37-5250	Jackshaft	1
26	251-286	Flange	2
27	3242-1	Sq. Hd. Setscrew	1
28	32-1790	Sheave	1
29	37-5660	V-Belt	1

Ref. No.	Part No.	Description	No. Used
30	3242-2	Sq. Hd. Setscrew	1
31	31-7620	Felt Washer	1
32	31-0210	Washer	1
33	31-9500	Torsion Spring	1
34	3272-23	Cotter Pin	1
35	323-4	Capscrew	4
36	30-8670	Locknut	1
37	32-1450	Idler Pulley	1
38	3256-27	Washer	3
39	37-5470	Idler Arm (Incl. Ref. #40)	1
40	31-0680	Bushing	1
41	37-5890	Lifting Lug	2
42	32-1760	Tool Bar L.H.	1
43	3290-357	Flange Nut	12
44	323-6	Capscrew	4
45	3217-6	Nut	4
46	32-1770	Tool Bar R.H.	1
47	32-1800	Hinge Plate	1
48	322-3	Capscrew	4
49	3217-7	Hex Nut	2
50	30-0320	Angle Support	1
51	32105-3	Machine Screw	1
52	3256-24	Flat Washer	1
53	31-0530	Ball Bearing	1
54	30-5440	Sleeve	1
*	32-2820	Idler Pulley Assembly (Incl. Ref. #37 & 53-54)	1
*	18-2130	Toggle Switch Mounting Clamp	1

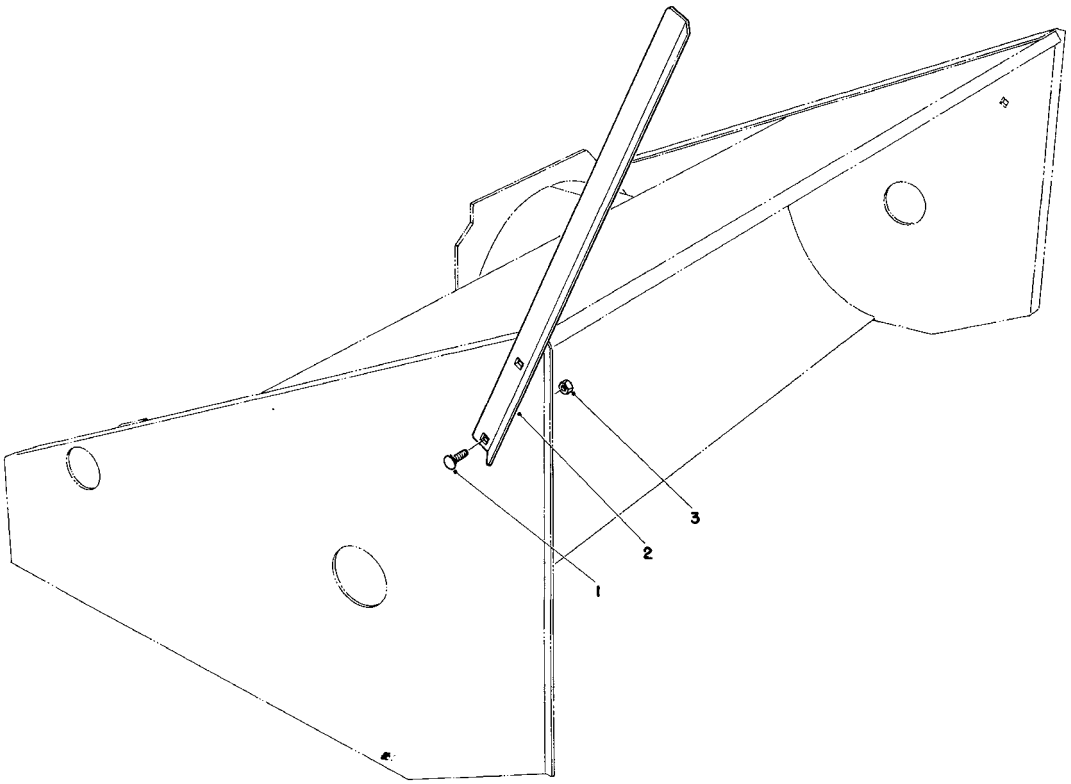

DRIFT CUTTER KIT NO. 30-1000 (Optional)

Ref. No.	Part No.	Description	No. Used
1	3290-391	Carriage Bolt	4
2	32-1840	Drift Cutter	2

Ref. No.	Part No.	Description	No. Used
3	30-8980	Hex Nut	4

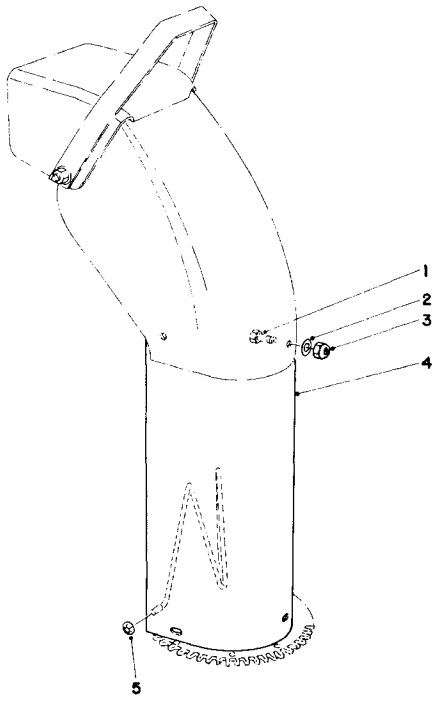

CHUTE EXTENSION KIT 26-1100

Ref. No.	Part No.	Description	No. Used
1	322-2	Hex Hd. Capscrew	6
2	3256-23	Washer	6
3	32152-1	Locknut	6

Ref. No.	Part No.	Description	No. Used
4†		Upper Chute Extender	1
5	3290-326	Pushnuts	2

†Not available, for reference only.

PRODUCT CHANGES

In an effort to make improvements available to TORO owners as quickly as possible, minor changes are incorporated into Toro's products from time to time that do not become immediately shown in the Parts Catalog. If such a change apparently has been made in your unit, which is not reflected in your manual, see your TORO Distributor for information and part numbers.

IDENTIFICATION AND ORDERING

Model and Serial Numbers

The Snowthrower has two identification numbers: a model number and a serial number. The two numbers are stamped on a plate which is located on the top left front corner of auger housing. In correspondence concerning the Snowthrower, supply model and serial numbers to assure that correct information and replacement parts are obtained.

To order replacement parts from an Authorized TORO Distributor, supply the following information:

1. Model and serial numbers of the Snowthrower.
2. Part number, description, and quantity of part(s) desired.

NOTE: Do not order by reference number if a parts catalog is being used; use the PART NUMBER.

The Toro Promise

A One Year Limited Warranty on Turf Products Other Than Walk Rotary Mowers

The Toro Company promises to repair any TORO Product if defective in materials or workmanship. The following time periods from the date of purchase apply:

Turf Products	1 Year
Hevi-Duty Walk Rotary Mowers	90 Days

The costs of parts and labor are included, but the customer pays the transportation costs on walk rotary mowers.

Should you feel your TORO is defective and wish to rely on The Toro Promise, the following procedure is recommended:

1. Contact your Authorized TORO Distributor (the Yellow Pages of your telephone directory is a good reference source).
2. The TORO Distributor will advise you on the arrangements that can be made to inspect and repair your product.
3. The TORO Distributor will inspect the product and advise you whether the product is defective and, if so, make all repairs necessary to correct the defect without extra charge to you.

If for any reason you are dissatisfied with the distributor's analysis of the defect or the service performed, you may contact us.

Write:

TORO Turf Products Service Department
8111 Lyndale Avenue South
Minneapolis, Minnesota 55420

The above remedy of product defects through repair by an Authorized TORO Distributor is the purchaser's sole remedy for any defect.

THERE IS NO OTHER EXPRESS WARRANTY. ALL IMPLIED WARRANTIES OF MERCHANTABILITY AND FITNESS FOR USE ARE LIMITED TO THE DURATION OF THE EXPRESS WARRANTY.

Some states do not allow limitation on how long implied warranty lasts, so the above limitation may not apply to you.

This Warranty applies only to parts or components which are defective and does not cover repairs necessary due to normal wear, misuse, accidents, or lack of proper maintenance. Regular, routine maintenance of the unit to keep it in proper operating condition is the responsibility of the owner.

All warranty repairs reimbursable under The Toro Promise must be performed by an Authorized TORO Distributor using Toro approved replacement parts.

Repairs or attempted repairs by anyone other than an Authorized TORO Distributor are not reimbursable under The Toro Promise. In addition, these unauthorized repair attempts may result in additional malfunctions, the correction of which is not covered by warranty.

The Toro Company is not liable for indirect, incidental or consequential damages in connection with the use of the product including any cost or expense of providing substitute equipment or service during periods of malfunction or non-use.

Some states do not allow the exclusion of incidental or consequential damages, so the above exclusion may not apply to you.

This warranty gives you specific legal rights, and you may also have other rights which vary from state to state.

Litho in U.S.A.