Form No. 3455-579 Rev A

TORO®

Count on it.

Parts Catalog

Titan® X4850

Riding Mower

Model No. 74875—Serial No. 411900000 and Up

Register at www.Toro.com.
Original Instructions (EN)

CE

3455-579 A

Ordering Replacement Parts

To order replacement parts, please supply the part number, the quantity, and the description of each part desired.

Understanding Reference Numbers

Each identified part in an illustration has a reference number. The reference number for a part also appears in the parts list, along with other information about the part.

This catalog uses two special reference number formats, one to indicate parts in a service assembly and another to indicate the quantity of a given part in an illustration.

Service Assembly Reference Numbers

Parts in service assemblies have reference numbers in the form a:b. The a represents the reference number of the entire service assembly and the b represents a sequential number unique to each part within the service assembly.

For example, a wheel assembly might be identified by reference number 6, the tire by 6:1, the valve by 6:2, and the wheel by 6:3. When you order the assembly identified by reference number 6, you receive all parts identified by reference numbers 6:1,6:2, and 6:3. However, you may also order any part individually. Reference numbers of this type appear in illustration and in parts lists.

Reference Numbers Indicating Quantity

In an illustration, if a reference number indicates more than one part, the reference number has the form nX y. The n represents the quantity of the part, the X is the multiplication symbol, and the y represents the reference number.

For example, in an illustration, the reference number 2X 37 means that two of the parts identified by reference number 37 are indicated.

Contents

Frame Assembly 4
Deck Lift Assembly 6
Tire and Caster Assembly 8
Traction Drive Assembly 10
RH Hydro Transmission Assembly No. 147-2861 12
LH Hydro Transmission Assembly No. 147-2860 14
Brake Assembly 16
Tire Assembly 18
Seat Pan Assembly 20
Seat Assembly No. 140-2714 22
Motion Control Assembly 24
Engine and Muffler Assembly 26
Body Styling and Fuel Pod Assembly 28
Fuel Tank Assembly No. 144-5303 30
Electrical Assembly 32
48in Deck Assembly 34
Deck Decal Assembly No. 140-0352 36
Frame Decal Assembly 38
Clutch Assembly 40
Attachments and Accessories 42

© 2022—The Toro® Company
8111 Lyndale Avenue South
Bloomington, MN 55420

Contact us at www.Toro.com.
Printed in the USA.
All Rights Reserved

Frame Assembly

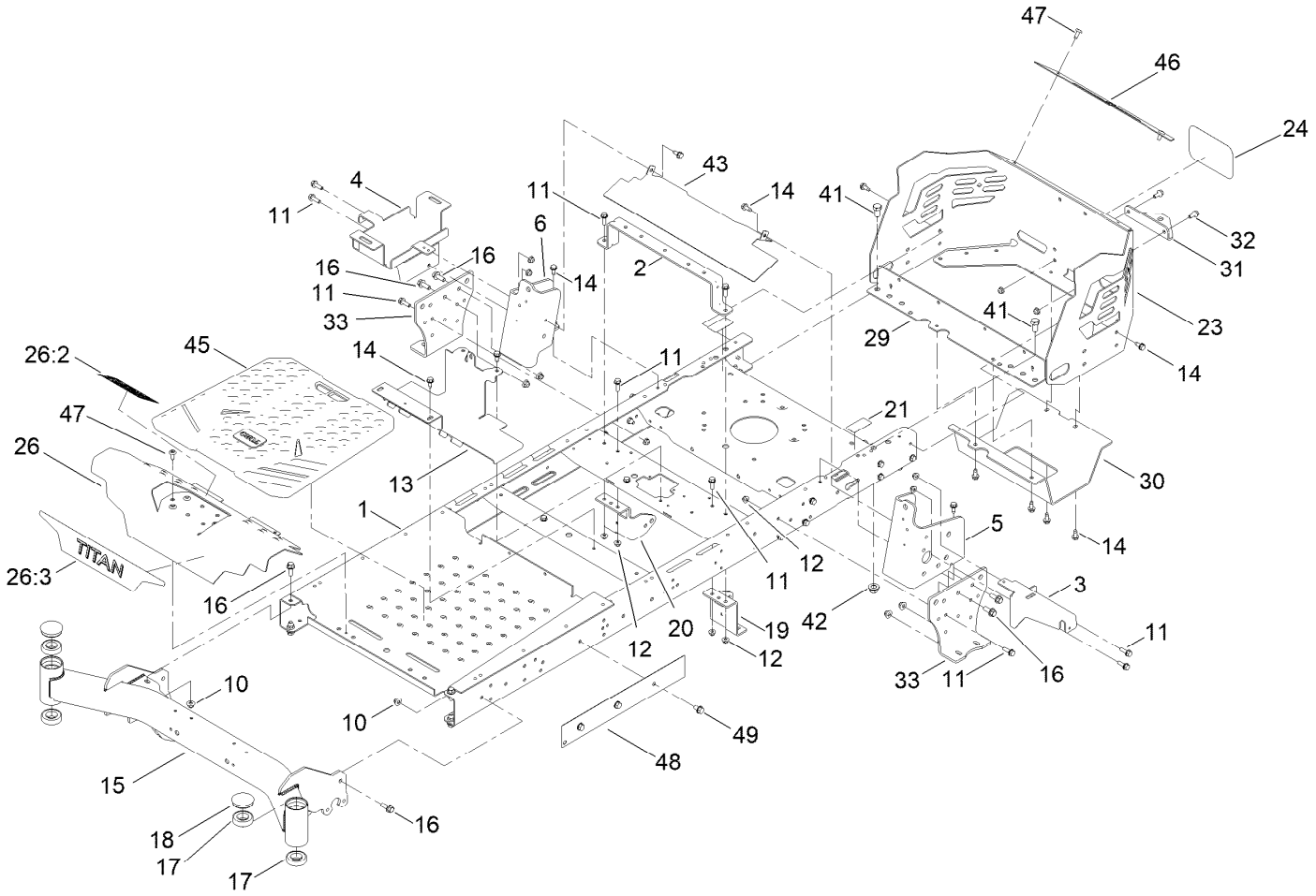

Frame Assembly (continued)

Ref.	Part Number	Qty.	Description
1	133-1191-01	1	Frame ASM
2	135-0687-03	1	Brace-Seat, Rear (Wide)
3	133-7051-03	1	Bracket-Support, Pod (LH)
4	139-3570	1	Tray-Battery
5	137-5068-01	1	Bracket-Mounting, LH
6	137-5069-01	1	Bracket-Mounting, RH
10	119-4042	10	Nut-HF, NI
11	139-2596	16	Screw-HHF
12	119-4041	20	Nut-HF
13	133-4485-03	1	Bracket-Mount
14	32144-70	22	Screw-HWHTF
15	140-2706-01	1	Front Axle ASM
16	139-2597	10	Screw-HHF
17	109-3678	4	Bearing-Ball
18	138-7200	2	Cap-Grease
19	139-3211-01	1	Mount-Hydro, Front (Left)
20	137-7020-01	1	Mount-Hydro, Front (Right)
21	121-2989	2	Decal-Bypass

Ref.	Part Number	Qty.	Description
23	140-1031-03	1	Guard-Engine
24	99-4693	1	Decal
26	140-3485	1	Footrest-Titan
26:2	140-3451	1	Decal-Danger
26:3	139-7469	1	Decal-Titan
29	137-7016-01	1	Crossmember-Rear, Wide
30	133-4429-03	1	Guard-Muffler
31	117-1232-03	1	Bracket-Hitch
32	139-2598	4	Screw-HHF
33	133-1201-03	2	Mount-Hydro
41	139-2628	2	Screw-HH
42	139-1689	2	Nut-HF
43	136-9183-03	1	Shield
45	139-7487	1	Floor Mat
46	140-1032-01	1	Trim-Guard, Engine
47	138-9753	4	Screw
48	140-0366-01	1	Plate-Frame
49	32144-69	3	Screw-HWHTF

Deck Lift Assembly

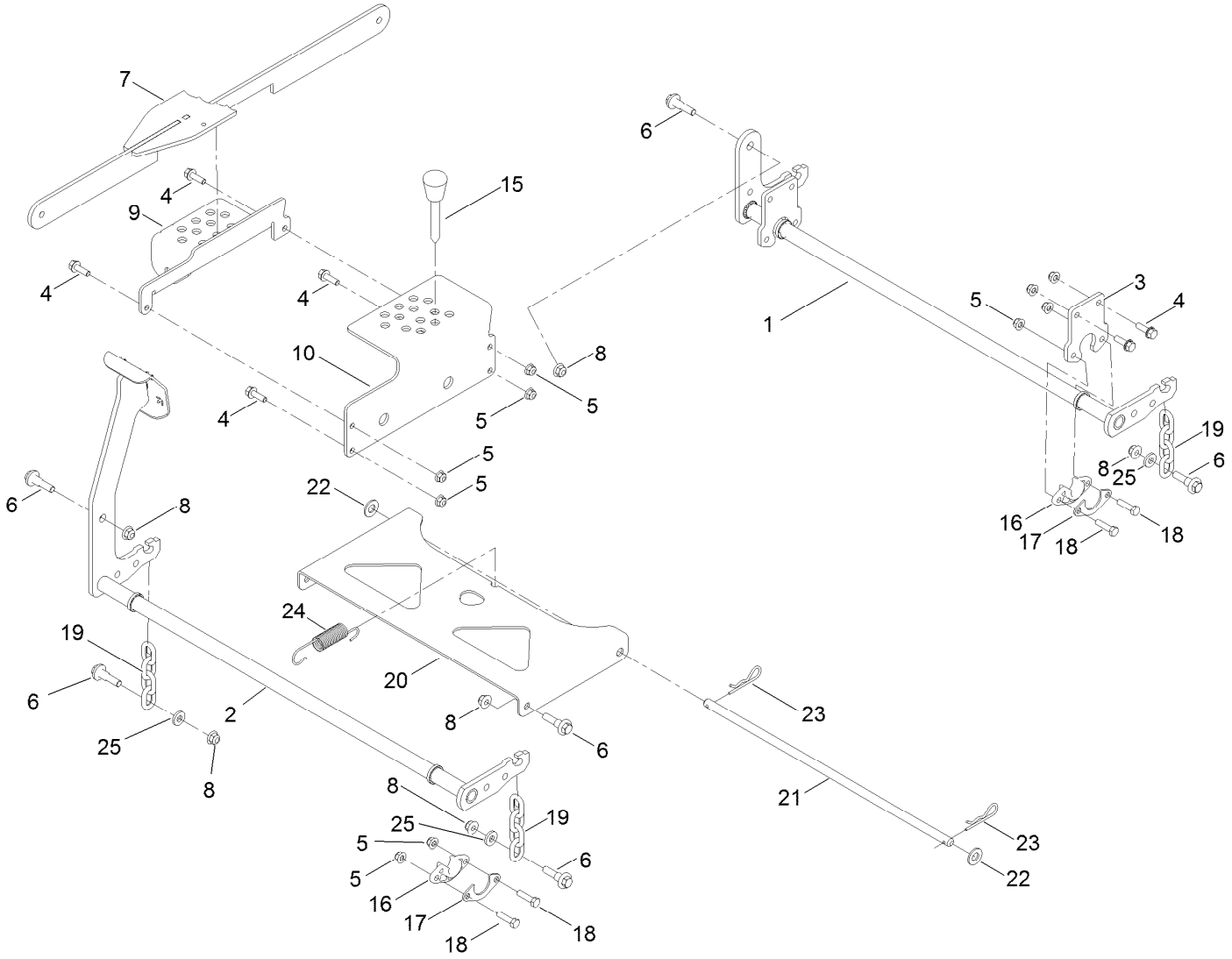

Deck Lift Assembly (continued)

Ref.	Part Number	Qty.	Description
1	137-2020-03	1	Pivot-Rear
2	133-4430-03	1	Pivot-Front
3	137-2021-03	2	Plate
4	139-2596	8	Screw-HHF
5	119-4041	16	Nut-HF
6	130-0742	8	Bolt-Shoulder
7	139-3553-03	1	Lift Link ASM
8	119-4042	8	Nut-HF, NI
9	139-3557-03	1	Plate-HOC, Lower
10	139-3556-03	1	Plate-HOC, Upper
15	140-2146	1	HOC Pin ASM

Ref.	Part Number	Qty.	Description
16	139-5872	4	Bearing-Flange
17	138-7204	4	Gusset-Deck Lift
18	120-9696	8	Screw-HH
19	138-7205	4	Chain-Decklift, 4-Link
20	133-4311-01	1	Pan-Pivot, Deck
21	133-7071	1	Rod-Pivot, Deck
22	139-2611	2	Washer-Flat
23	139-2562	2	Pin-Hair
24	138-7206	1	Spring-Extension
25	138-7207	4	Spacer-Hub, Blower

Tire and Caster Assembly

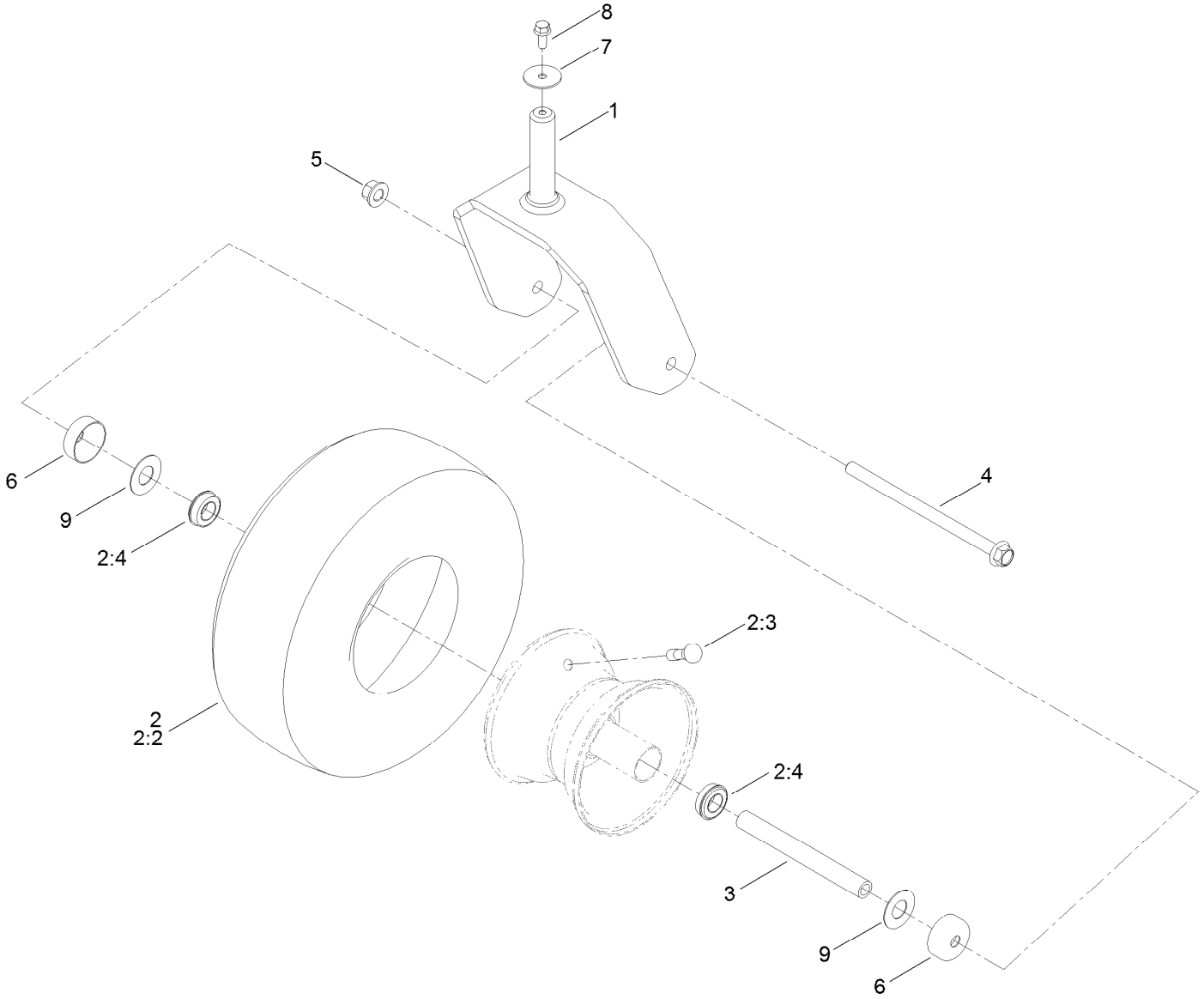

Tire and Caster Assembly (continued)

Ref.	Part Number	Qty.	Description
1	139-7537-01	2	Fork-Caster
2	139-7532	2	Tire And Wheel ASM
2:2	126-5959	1	Tire
2:3	232-27	1	Stem-Valve
2:4	136-4190	2	Bearing
3	133-4487	2	Spanner-Wheel
4	139-2559	2	Screw-HHF
5	139-1689	2	Nut-HF
6	138-7208	4	Guard-Seal
7	115-1151	2	Washer-Flat
8	139-2598	2	Screw-HHF
9	136-5590	4	Washer

Traction Drive Assembly

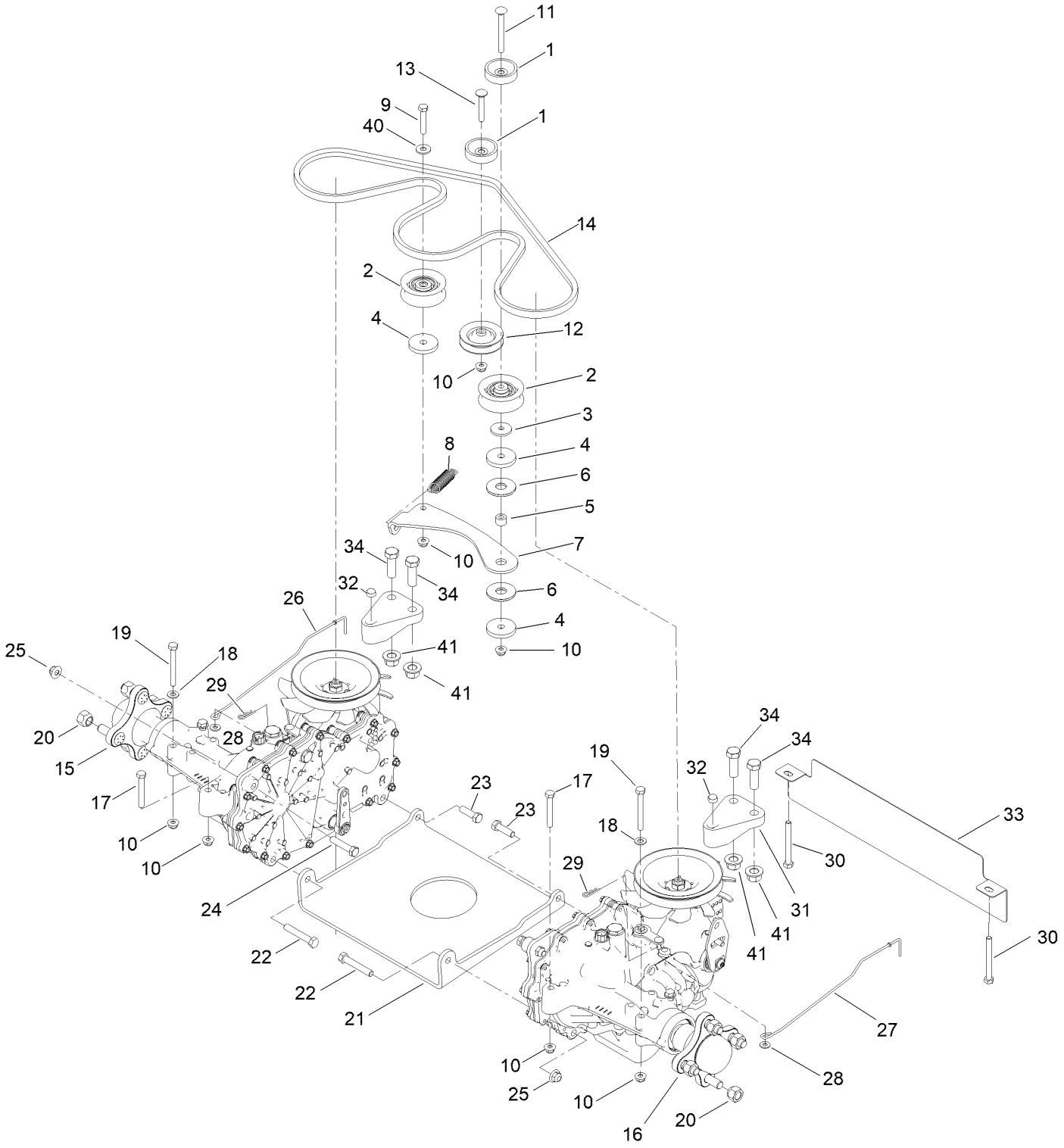

Traction Drive Assembly (continued)

Ref.	Part Number	Qty.	Description
1	119-3353	2	Spacer
2	138-7597	2	Pulley-Idler, Flat
3	139-1704	1	Washer-Flat
4	139-5802	3	Washer-Plain
5	138-7209	1	Bushing
6	114-0463	2	Washer-Friction, Composite
7	133-4423	1	Arm-Idler
8	137-7040	1	Spring-Return, Pedal
9	139-1719	1	Screw-HH
10	119-4041	9	Nut-HF
11	119-9784	1	Screw-CARR
12	119-8822	1	Pulley-Idler
13	139-2625	1	Screw-CARR
14	133-4371	1	V-Belt
15	147-2861	1	RH Hydro Transmission ASM
16	147-2860	1	LH Hydro Transmission ASM
17	120-9738	2	Screw-HH
18	120-9683	6	Washer-Plain
19	139-2583	4	Screw-HH
20	139-2564	8	Nut-Lug
21	130-0718-01	1	Plate-Cross, Hydro
22	139-2589	2	Screw-HH
23	139-2601	2	Screw-HH
24	139-2602	2	Screw-HH
25	119-4042	6	Nut-HF, NI
26	139-5855	1	Rod-Bypass, RH
27	139-5854	1	Rod-Bypass, LH
28	120-9679	2	Washer-Flat
29	137-3083	2	Pin-Hair
30	139-2584	2	Screw-HH
31	133-1247	2	Support-Hydro, Rear
32	119-4038	2	Nut-Hex
33	131-1098-03	1	Guard-Rear, Wide
34	139-2631	4	Screw-HH
40	139-1723	1	Washer-Flat
41	139-1689	4	Nut-HF

RH Hydro Transmission Assembly No. 147-2861

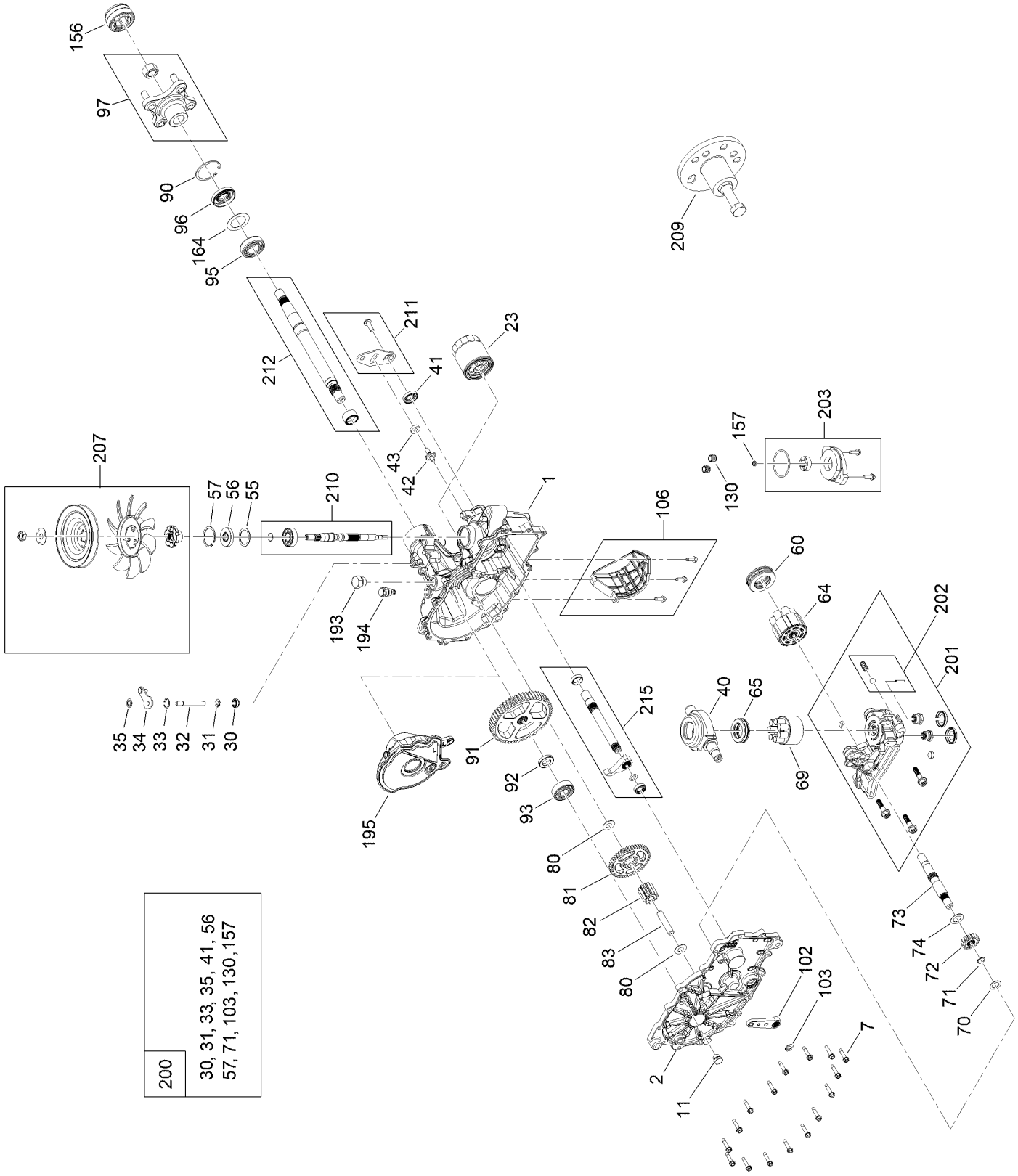

RH Hydro Transmission Assembly No. 147-2861 (continued)

Ref.	Part Number	Qty.	Description
1	140-8347	1	LH Main Housing Kit
2	140-8350	1	LH Side Cover Kit
7	117-5359	16	Screw-HHF
11	135-1140	1	Plug-Straight
23	109-3321	1	Element-Oil Filter, HYD
30	139-7497	1	Seal-Lip
31	106-8677	1	Ring-Retaining, External
32	114-1685	1	Rod-Bypass
33	106-8679	1	Ring-Retaining, Internal
34	107-2490	1	Arm-Bypass
35	106-8681	1	Ring-Retaining, External
40	104-5304	1	Swashplate-Trunnion
41	104-5313	1	Seal-Lip
42	104-2116	1	Stud
43	112-9853	1	Puck-Friction
55	104-5308	1	Spacer
56	104-5310	1	Seal-Lip
57	104-5309	1	Ring-Retaining
60	112-4154	1	Bearing-Thrust
64	139-4074	1	Cylinder Block ASM Kit
65	94-6922	1	Bearing-Thrust
69	110-8561	1	Pump Block ASM
70	104-5339	1	Washer-Flat
71	104-5340	1	Ring-Retaining
72	114-1690	1	Gear-14T
73	114-1691	1	Shaft-Motor
74	104-5360	1	Washer
80	94-1933	2	Washer
81	114-1692	1	Gear-45T
82	114-1693	1	Gear-11T
83	104-5329	1	Pin-Jackshaft
90	104-2169	1	Ring-Retaining
91	114-1694	1	Gear-54T
92	120-7975	1	Spacer
93	135-1361	1	Bearing-Ball
95	130-8477	1	Bearing-Ball
96	104-2144	1	Seal
97	109-5939	1	Hub Kit
102	125-0021	1	Handle-Brake
103	131-0906	1	Ring-Retaining, EXT
106	139-7498	1	Filter Guard Kit
130	126-3251	2	Tube-Charge
156	115-5057	1	Cover-Nut, Axle
157	126-1930	1	Gerotor Seal Kit
164	121-5745	1	Spacer
193	140-8343	1	Plug
194	140-8356	1	Breather Fitting ASM
195	140-8358	1	LH Internal Expansion Tank ASM
200	140-8351	1	Seal Kit
201	147-2907	1	Kit, Center Section, RH Charge
202	114-8464	1	Charge Relief Kit
203	114-8465	1	Charge Kit
207	135-7343	1	Fan And Pulley Kit
209	114-8467	1	Puller-Hub, 4 Bolt
210	139-7502	1	Input Shaft Kit
211	117-5362	1	Control Arm Kit
212	114-8470	1	Axle Shaft Kit
215	140-8353	1	Inboard Kit

LH Hydro Transmission Assembly No. 147-2860

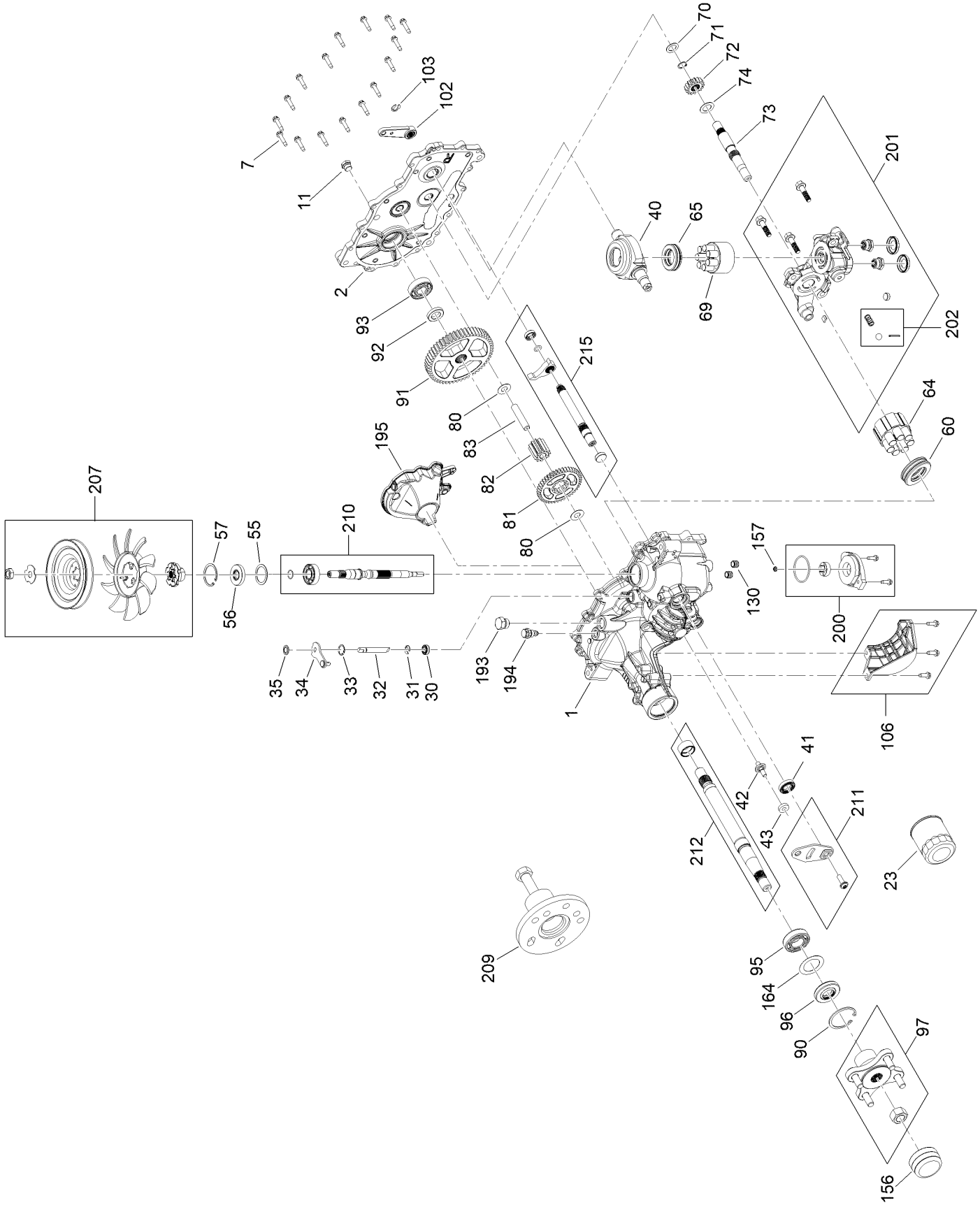

LH Hydro Transmission Assembly No. 147-2860 (continued)

Ref.	Part Number	Qty.	Description
1	140-8345	1	RH Main Housing Kit
2	140-8349	1	RH Side Cover Kit
7	117-5359	16	Screw-HHF
11	135-1140	1	Plug-Straight
23	109-3321	1	Element-Oil Filter, HYD
30	139-7497	1	Seal-Lip
31	106-8677	1	Ring-Retaining, External
32	114-1685	1	Rod-Bypass
33	106-8679	1	Ring-Retaining, Internal
34	112-9852	1	Arm-Bypass
35	106-8681	1	Ring-Retaining, External
40	104-5304	1	Swashplate-Trunnion
41	104-5313	1	Seal-Lip
42	104-2116	1	Stud
43	112-9853	1	Puck-Friction
55	104-5308	1	Spacer
56	104-5310	1	Seal-Lip
57	104-5309	1	Ring-Retaining
60	112-4154	1	Bearing-Thrust
64	139-4074	1	Cylinder Block ASM Kit
65	94-6922	1	Bearing-Thrust
69	110-8561	1	Pump Block ASM
70	104-5339	1	Washer-Flat
71	104-5340	1	Ring-Retaining
72	114-1690	1	Gear-14T
73	114-1691	1	Shaft-Motor
74	104-5360	1	Washer
80	94-1933	2	Washer
81	114-1692	1	Gear-45T
82	114-1693	1	Gear-11T
83	104-5329	1	Pin-Jackshaft
90	104-2169	1	Ring-Retaining
91	114-1694	1	Gear-54T
92	120-7975	1	Spacer
93	135-1361	1	Bearing-Ball
95	130-8477	1	Bearing-Ball
96	104-2144	1	Seal
97	109-5939	1	Hub Kit
102	125-0021	1	Handle-Brake
103	131-0906	1	Ring-Retaining, EXT
106	139-7499	1	Filter Guard Kit
130	126-3251	2	Tube-Charge
156	115-5057	1	Cover-Nut, Axle
157	126-1930	1	Gerotor Seal Kit
164	121-5745	1	Spacer
193	140-8343	1	Plug
194	140-8356	1	Breather Fitting ASM
195	140-8357	1	RH Internal Expansion Tank ASM
200	140-8351	1	Seal Kit
201	147-2906	1	Kit, Center Section, LH Charge
202	114-8464	1	Charge Relief Kit
203	114-8465	1	Charge Kit ●
207	135-7343	1	Fan And Pulley Kit
209	114-8467	1	Puller-Hub, 4 Bolt
210	139-7502	1	Input Shaft Kit
211	117-5362	1	Control Arm Kit
212	114-8470	1	Axle Shaft Kit
215	140-8352	1	Inboard Kit

● Not illustrated

Brake Assembly

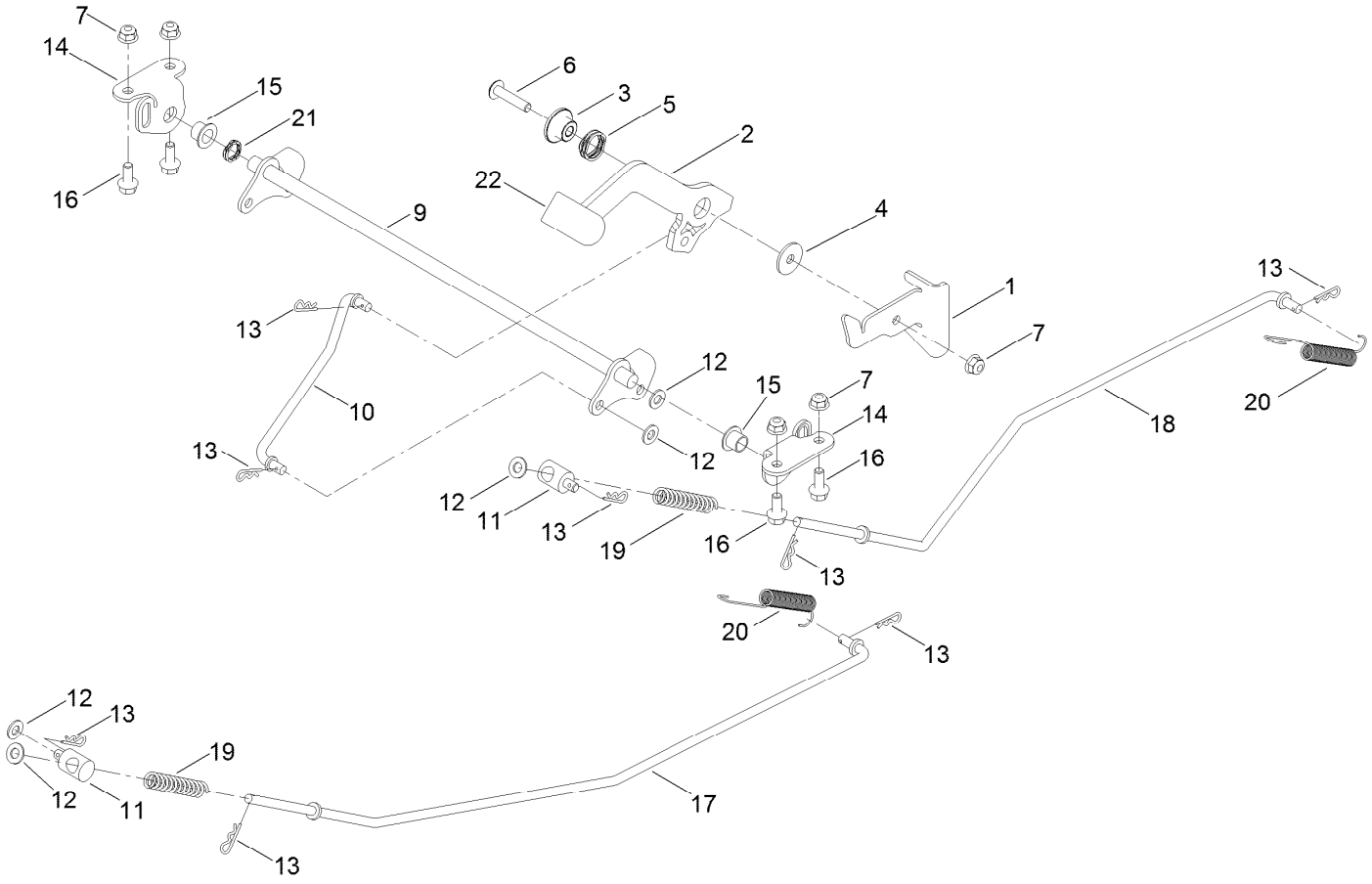

Brake Assembly (continued)

Ref.	Part Number	Qty.	Description
1	136-5554	1	Detent-Brake
2	140-0412	1	Handle-Brake, Parking
3	139-3572	1	Bushing-Flange
4	5-4460	1	Washer-Pivot
5	120-5116	1	Washer-Wave
6	126-7439	1	Screw-Torx
7	119-4041	5	Nut-HF
9	133-9338	1	Bellcrank-Brake
10	133-9342	1	Rod-Brake, Intermediate
11	138-7212	2	Fitting-Rod
12	120-9683	5	Washer-Plain
13	137-3083	8	Pin-Hair
14	139-5878-03	2	Plate-Support, Bellcrank
15	125-5239	2	Bushing-Flange
16	139-2598	4	Screw-HHF
17	133-9343	1	Rod-Brake, RH
18	133-9344	1	Rod-Brake, LH
19	138-7252	2	Spring-Compression
20	110769	2	Spring-Extension
21	137-5011	1	Spring-Wave
22	140-0413	1	Grip-Handle

Tire Assembly

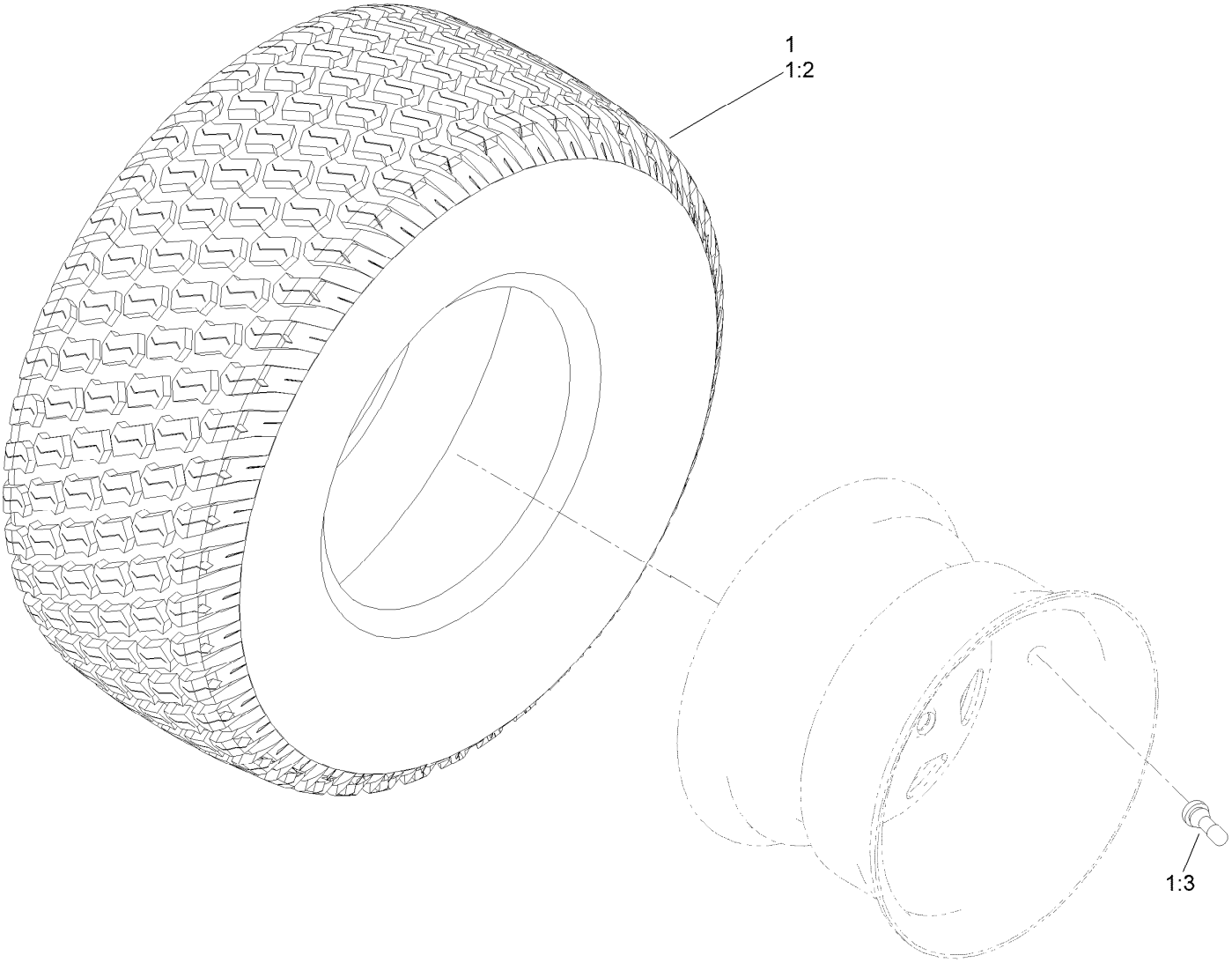

Tire Assembly (continued)

Ref.	Part Number	Qty.	Description
1	145-0495	2	Tire ASM
1:2	145-0494	1	Tire

Ref.	Part Number	Qty.	Description
1:3	232-27	1	Stem-Valve
1:99	105-4070	1	Tube-Inner ■ ●

● Not illustrated

■ Optional Equipment

Seat Pan Assembly

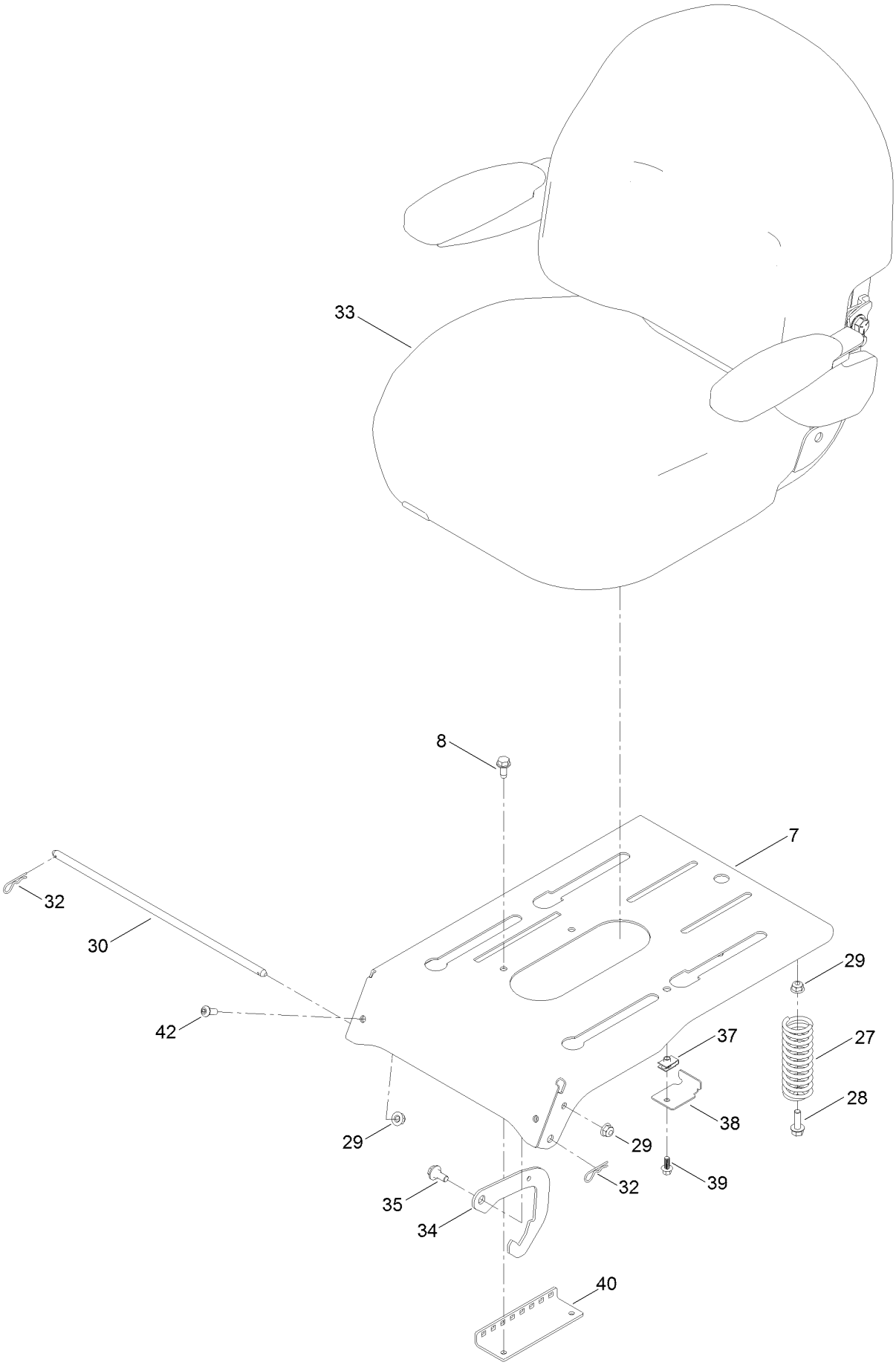

Seat Pan Assembly (continued)

Ref.	Part Number	Qty.	Description
7	136-5571-03	1	Pan-Seat, Deluxe
8	32144-70	2	Screw-HWHTF
27	92-7054	3	Spring-Compression
28	139-2596	3	Screw-HHF
29	119-4041	7	Nut-HF
30	138-7213	1	Rod-Pivot, Narrow
32	3290-250	2	Pin-Cotter
33	140-2714	1	Seat ASM

Ref.	Part Number	Qty.	Description
34	138-7250	2	Seat Latch
35	19-1470	2	Screw-Shoulder
37	107069	1	Clip
38	138-7214	1	Bracket-Stop, Seat
39	137-3111	1	Screw-HHF
40	131-4008-03	1	Bracket-Latch, Seat
42	3274-55	2	Screw-HSBH

Seat Assembly No. 140-2714

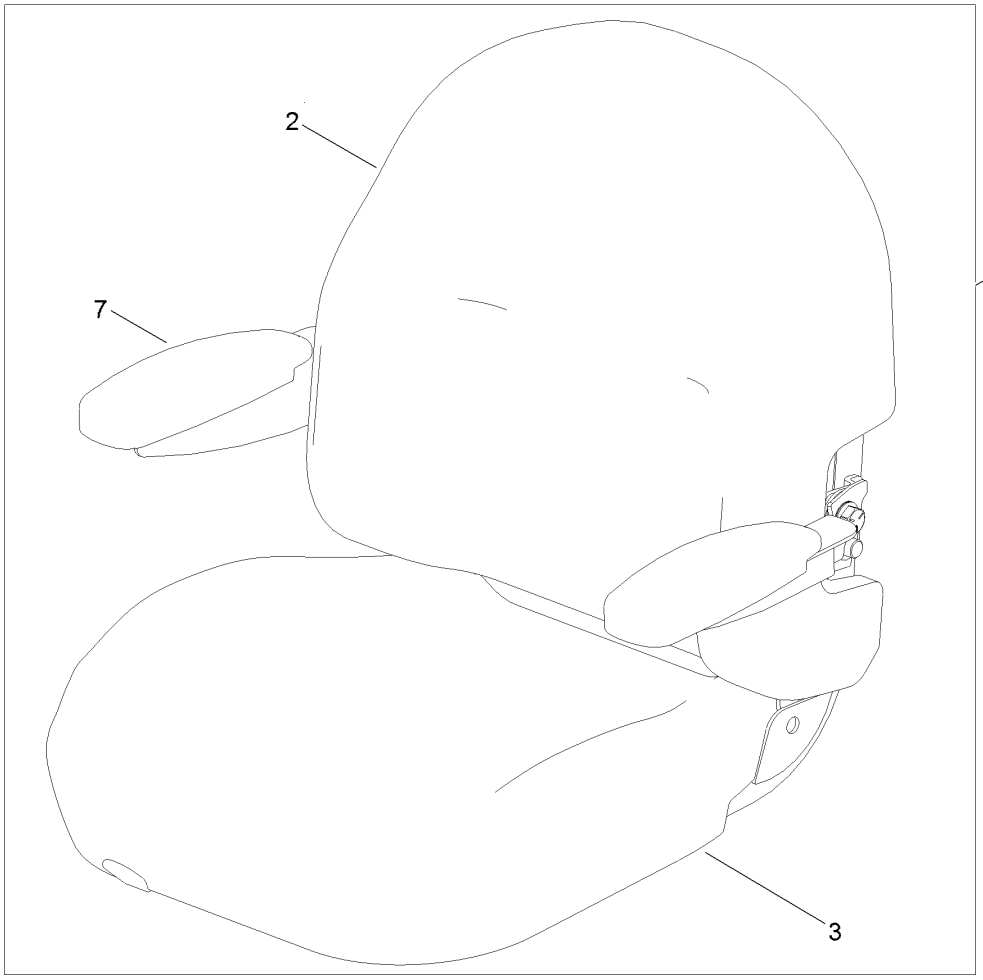

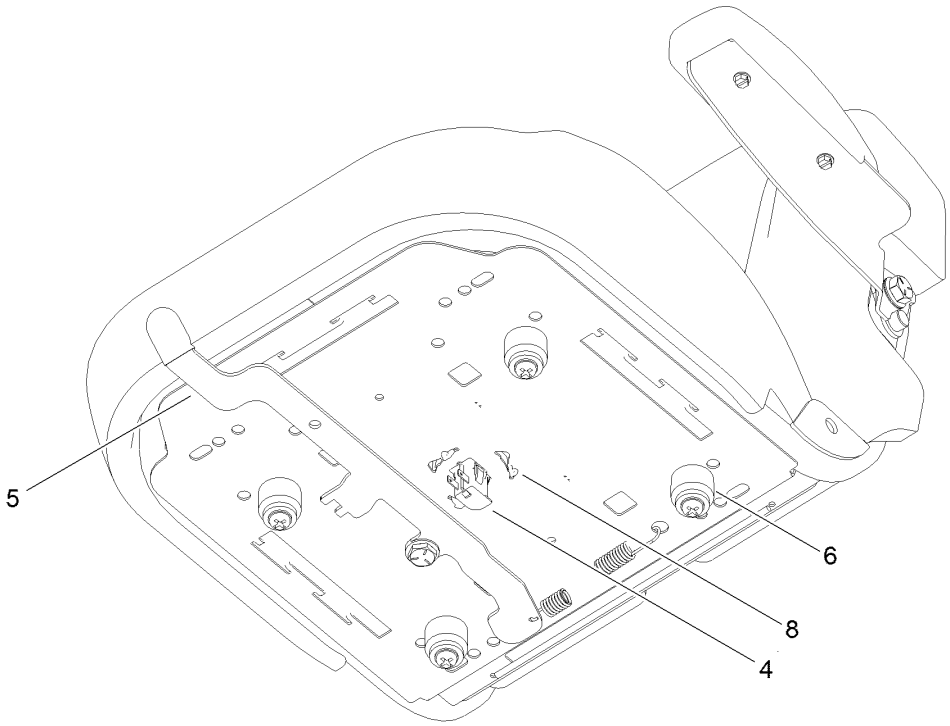

Seat Assembly No. 140-2714 (continued)

Ref.	Part Number	Qty.	Description
1	139-7548	1	Seat ASM
2	140-2077	1	Cover-Seat Back
3	140-2078	1	Cover-Seat Base
4	82-2190	1	Switch-Bail
5	131-4153	1	Track ASM
6	131-4154	1	Bushing ASM
7	139-5823	1	Arm Rest Kit
8	140-3468	1	Cap-Switch, Actuator

Motion Control Assembly

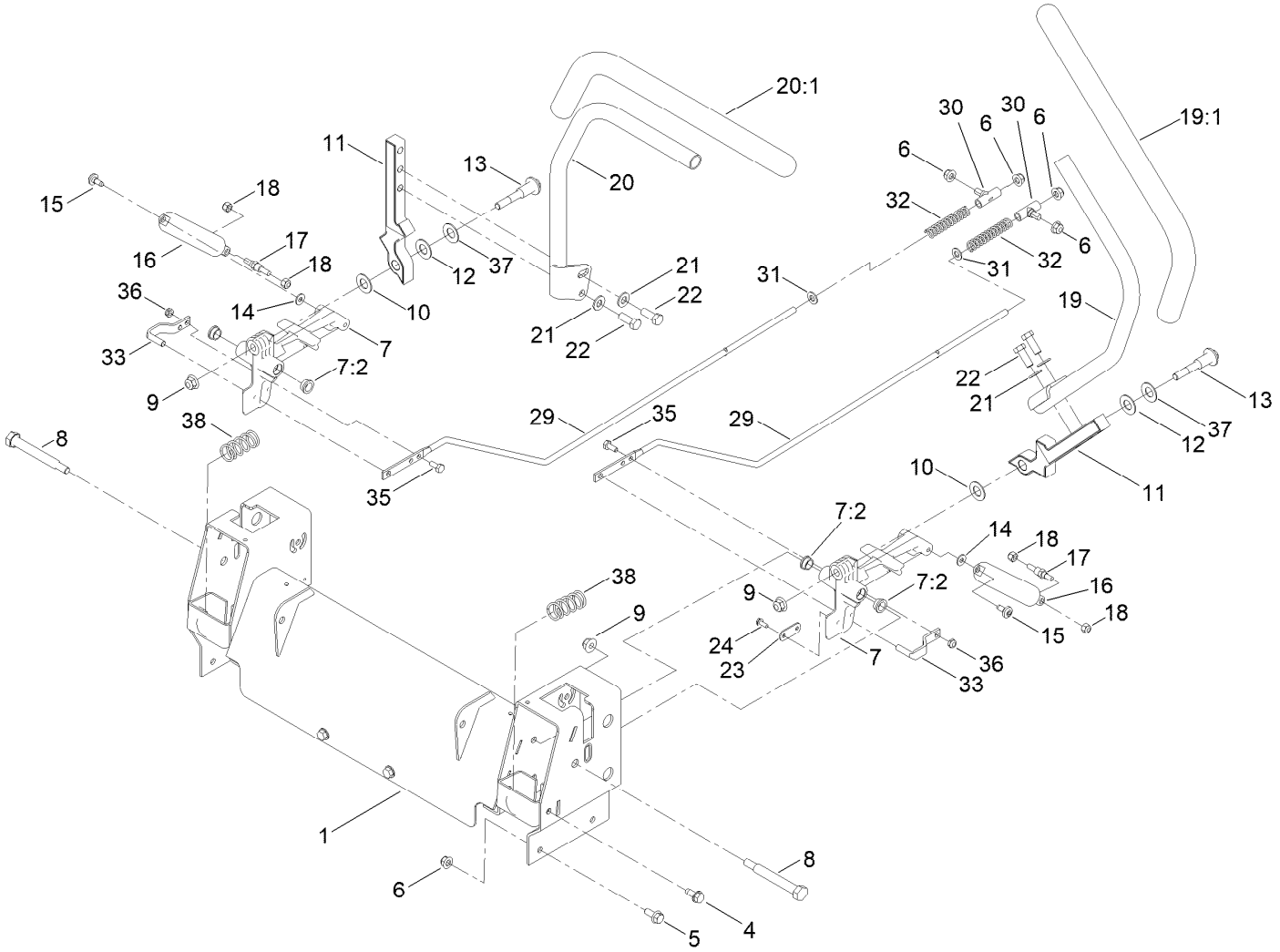

Motion Control Assembly (continued)

Ref.	Part Number	Qty.	Description
1	139-7531-03	1	Control Box ASM
4	32144-70	4	Screw-HWHTF
5	139-2598	6	Screw-HHF
6	119-4041	10	Nut-HF
7	119-3470	2	Actuator Arm ASM
7:2	256-156	2	Bushing-Flange
8	115-5099	2	Bolt-Pivot
9	119-4042	4	Nut-HF, NI
10	120-2273	2	Washer-Nylon
11	136-5570-05	2	Arm-Control
12	117-1240	2	Washer
13	139-2556	2	Bolt-Pivot
14	119-8952	2	Washer
15	120-7950	2	Screw-Torx
16	132-6853	2	Damper-Non Cavitating
17	138-7215	2	Stud-Damper
18	137-3088	4	Nut-Hex

Ref.	Part Number	Qty.	Description
19	133-7055	1	Handle-Control, LH
19:1	121-0726	1	Grip
20	133-7057	1	Handle-Control, RH
20:1	121-0726	1	Grip
21	115-1166	4	Washer-Flat
22	139-2600	4	Screw-HH
23	140-3458	2	Plate-Stop,Hydro
24	139-1713	4	Screw-Taptite
29	138-7217	2	Rod-Hydro
30	138-7218	2	Mount-Rod, Hydro
31	120-9683	2	Washer-Plain
32	138-7252	2	Spring-Compression
33	121-1753	2	Pin-Rod, Hydro
35	137-3041	2	Screw-HH
36	137-3091	2	Nut-Hex
37	119-8925	2	Washer-Belleville
38	138-7219	2	Spring-Return

Engine and Muffler Assembly

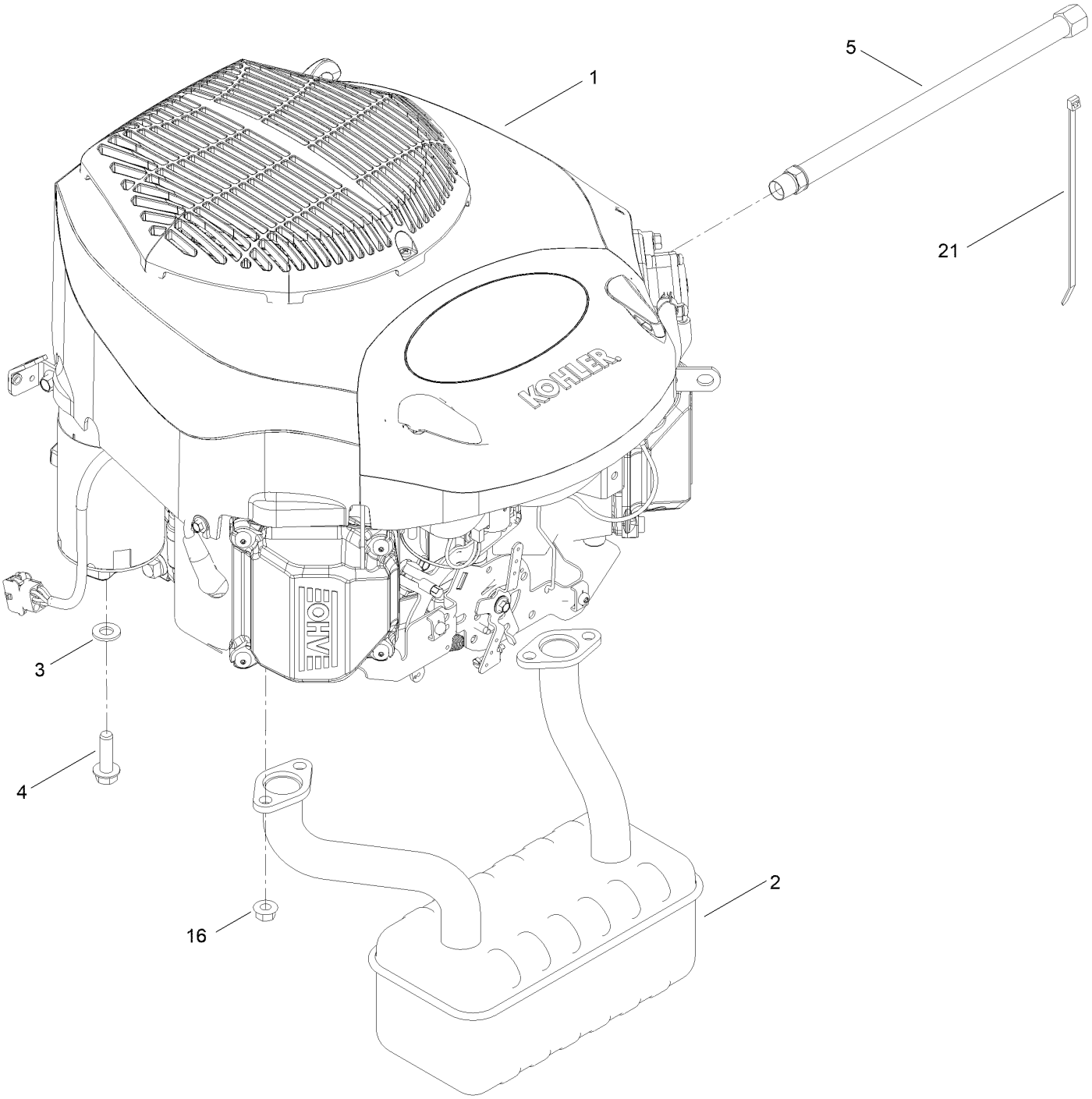

Engine and Muffler Assembly (continued)

Ref.	Part Number	Qty.	Description
1		1	Engine-Kohler, Kt735 Low Speed ■▲
1:1	110-6697	2	Gasket-Exhaust ●
1:3	281-2	1	Plug-Pipe, SQH ●
2	139-5868	1	Muffler
3	115-1166	4	Washer-Flat
4	139-2576	4	Screw-HWH
5	117-1261	1	Hose-Drain, Oil
16	33004-00	4	Nut-HF
21	614249	1	Tie-Cable

● Not illustrated
▲ Obtain parts from www.kohlerplus.com
■ Not serviced separately

Body Styling and Fuel Pod Assembly

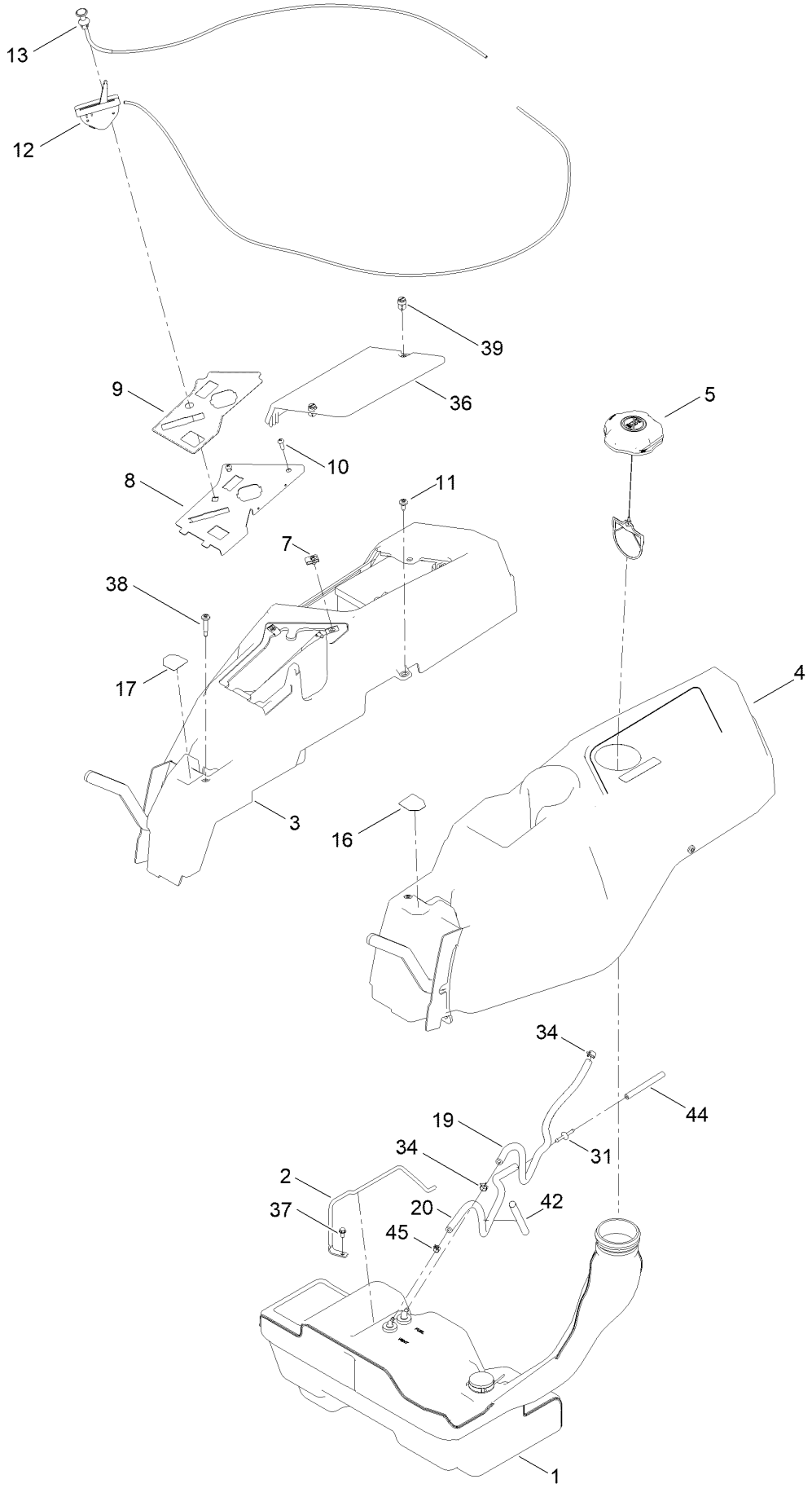

Body Styling and Fuel Pod Assembly (continued)

Ref.	Part Number	Qty.	Description
1	144-5303	1	Tank-Fuel ASM
2	136-4180	1	Rod-Hold Down
3	133-9307	1	Pod-RH
4	133-9315	1	Pod-LH
5	137-4119	1	Cap-Fuel, Ratcheting
7	107069	2	Clip
8	139-7486-03	1	Panel-Control
9	139-7473	1	Decal-Panel, Control
10	3258-166	2	Screw-PRH
11	120-7950	4	Screw-Torx
12	139-3267	1	Cable-Throttle
13	139-2402	1	Cable-Choke
16	136-4243	1	Decal-Lever, Control (LH)
17	136-4244	1	Decal-Lever, Control (RH)
19	110-5701	1	Hose-Fuel
20	138-3151	1	Hose-Vent
31	144-1983	1	Adapter Orifice
34	2412-98	2	Clamp-Hose
36	133-9308	1	Cover-Battery
37	32144-4	1	Screw-HWH
38	136-4195	2	Screw-Shoulder
39	121-5840	2	Fastener
42	138-2522	1	Sleeve-Fuel Line Protector
44	68-3632	1	Hose-Fuel
45	2412-80	1	Clamp-Hose

Fuel Tank Assembly No. 144-5303

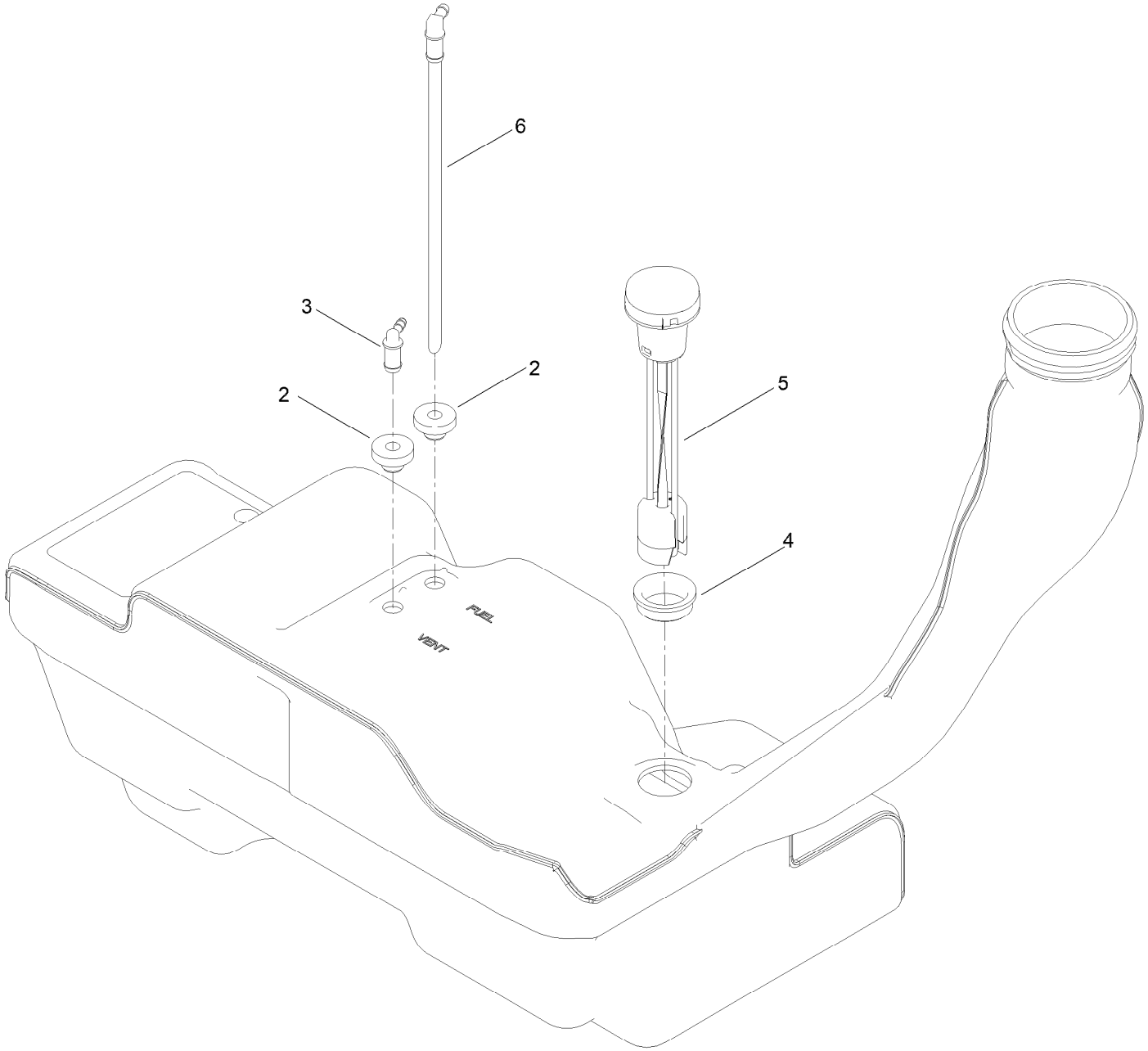

Fuel Tank Assembly No. 144-5303 (continued)

Ref.	Part Number	Qty.	Description
2	46-6560	2	Bushing
3	144-5302	1	Fitting-Elbow 90
4	133-9269	1	Grommet-Fuel
5	133-9270	1	Gauge-Fuel
6	121-0793	1	Connector-Elbow, 90 DEG

Electrical Assembly

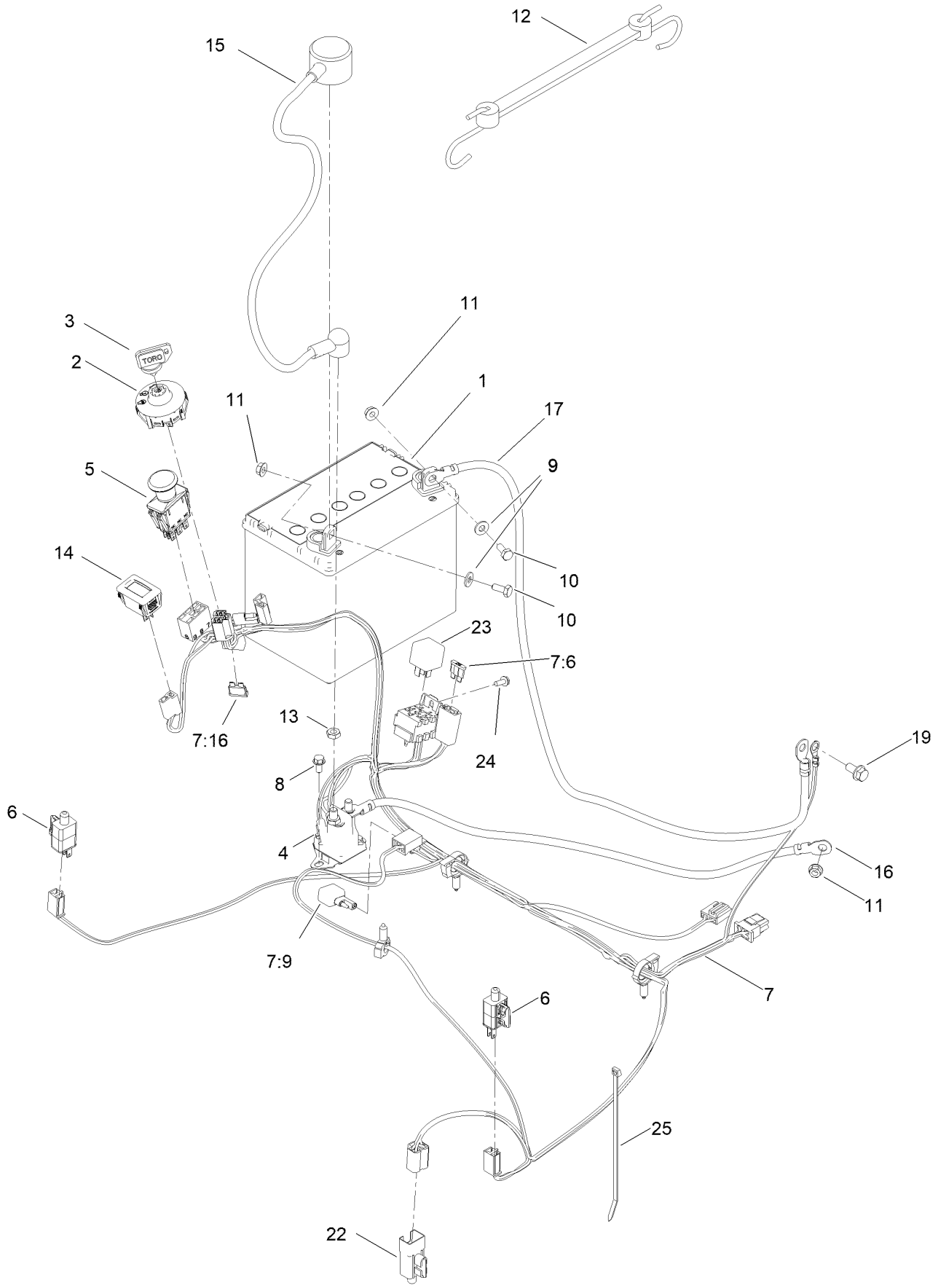

Electrical Assembly (continued)

Ref.	Part Number	Qty.	Description
1	104-8162	1	Battery
2	137-4100	1	Switch-Ignition
3	63-8360	1	Key-Ignition
4	117-1197	1	Solenoid
5	103-5221	1	Switch-PTO
6	110-6765	2	Switch
7	137-7002	1	Harness-Wire
7:6	109102	1	Fuse-Blade, 25 Amp
7:9	100-4918	1	Diode
7:16	109355	1	Fuse-Blade, 15 Amp
8	32144-4	2	Screw-HWH
9	120-9679	2	Washer-Flat
10	137-3041	2	Screw-HH
11	139-2575	3	Nut-HF
12	104-2466	1	Holddown-Battery
13	139-2580	2	Nut-HJ
14	120-2244	1	Hourmeter
15	115-3864	1	Cable-Battery, Positive
16	144-5276	1	Cable-Battery, Rd ASM
17	117-7240	1	Cable-Battery, Negative
19	139-2593	1	Screw-HHF
22	99-7408	1	Switch-Reverse
23	98-7249	1	Relay
24	139-1713	1	Screw-Taptite
25	614249	1	Tie-Cable

48in Deck Assembly

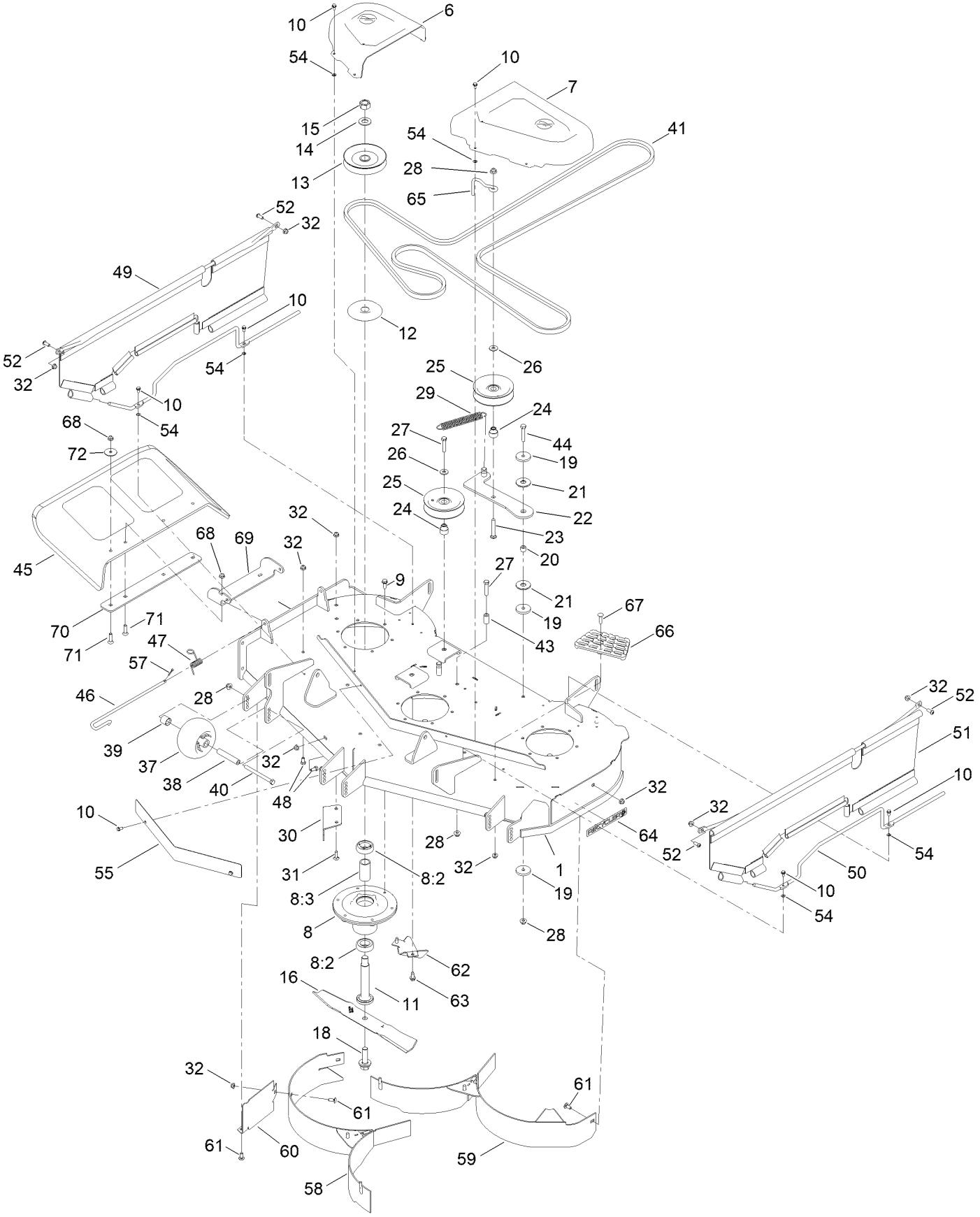

48in Deck Assembly (continued)

Ref.	Part Number	Qty.	Description
1	140-0352	1	48In Deck ASM
6	133-9283	1	Cover-Belt, RH
7	133-9282	1	Cover-Belt, LH
8	139-2357	3	Spindle ASM
8:2	116-0720	2	Bearing-Ball
8:3	138-7220	1	Spacer-Bearing
9	32144-41	18	Screw-Taptite
10	32144-4	14	Screw-HWH
11	115-2642	3	Shaft-Spindle
12	138-7221	3	Shield-Bearing
13	139-7456	3	Pulley
14	7-4150	3	Washer
15	139-2579	3	Nut-Hex
16	117-7278-03	3	Blade-Mulch, 16.50 Inch
18	145-0412	3	Screw-Blade
19	139-5802	3	Washer-Plain
20	138-7225	1	Spacer
21	114-0463	2	Washer-Friction, Composite
22	138-7226	1	Idler Arm ASM
23	139-2591	1	Screw-CARR
24	138-7227	3	Bushing-Idler
25	132-4718	3	Pulley-Idler, Flat
26	139-2632	3	Washer-Hardened
27	139-2602	3	Screw-HH
28	119-4042	6	Nut-HF, NI
29	138-7228	1	Spring-Extension
30	117-7418-03	1	Baffle-Cutoff
31	139-2587	2	Screw-CARR
32	119-4041	16	Nut-HF
37	1-603299	3	Roller-Scalp, Anti
38	138-7229	3	Tube-Spanner

Ref.	Part Number	Qty.	Description
39	104-0892	3	Spacer-Axle, Rear
40	139-2592	3	Screw-HH
41	133-7075	1	V-Belt
43	138-7230	1	Spacer-Fender
44	HDW07736	1	HHCS 3/8-16 X 2, GR5, Cz
45	117-1270	1	Deflector
46	138-7231	1	Pin-Chute
47	138-7232	1	Spring-Torsion
48	139-2585	3	Screw-HH
49	133-9261	2	Rod-Support, Upper
50	136-4221	2	Rod-Support, Lower
51	136-4234	2	Side Guard ASM
52	3274-55	4	Screw-HSBH
54	1-803037	12	Nut-Retaining
55	131-3900-03	1	Shield-Front
57	139-2614	1	Pin-Cotter
58	136-4205-03	1	Baffle-Recycler
59	136-7479-03	1	Baffle-Recycler
60	119-3352-03	1	Guard-Baffle
61	137-3061	4	Bolt-CARR
62	119-3389-03	2	Kicker-Flanged
63	32144-70	4	Screw-HWHTF
64	119-2368	1	Decal-Recycler
65	136-5615	1	Guide-Belt, Idler
66	126-4781-03	1	Step-Deck
67	139-1702	1	Bolt-Carriage
68	119-4041	6	Nut-HF
69	114-1648-03	1	Bracket-Deflector, Upper
70	115-5048-03	1	Plate-Deflector
71	139-1702	4	Bolt-Carriage
72	115-1151	2	Washer-Flat

Deck Decal Assembly No. 140-0352

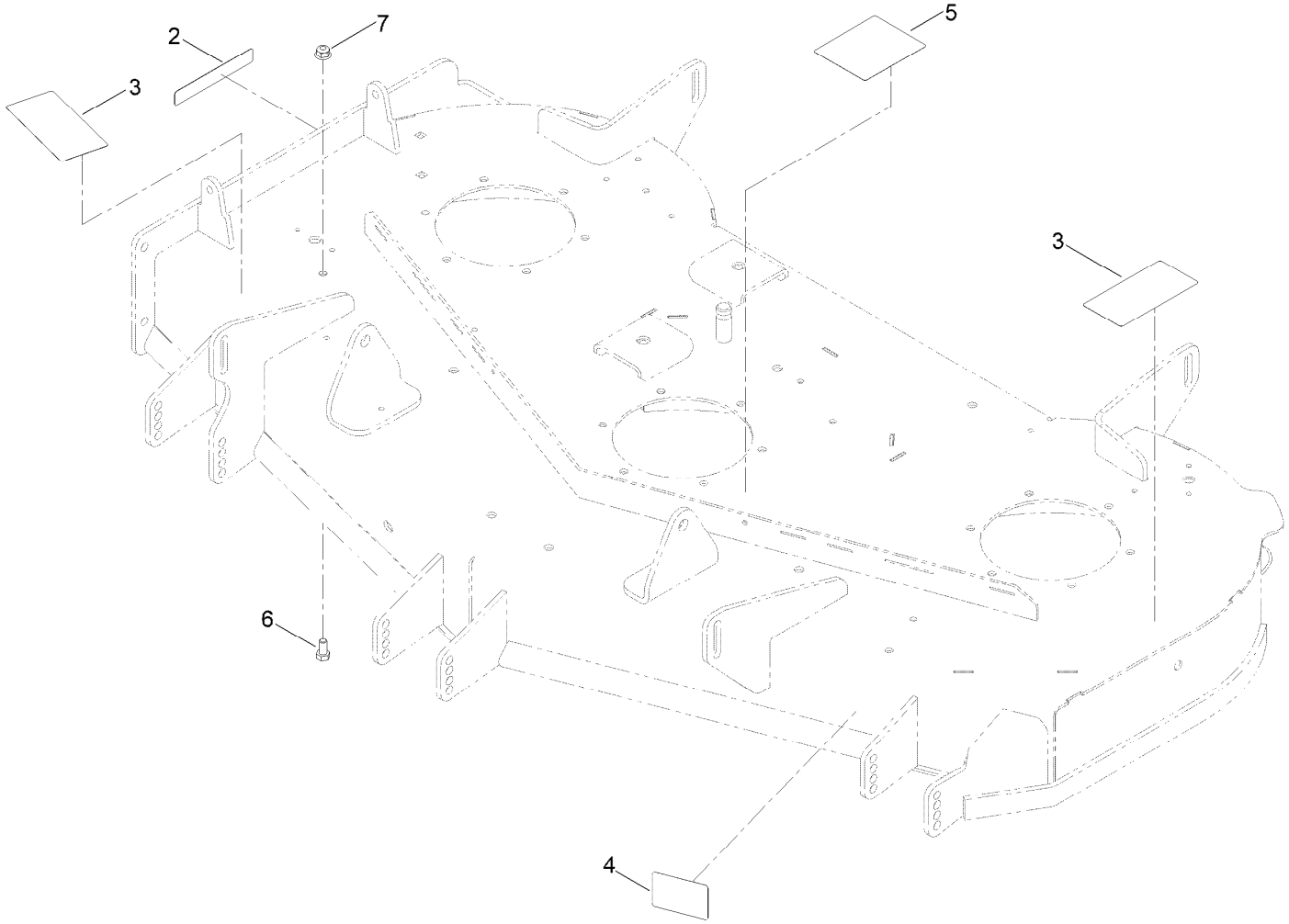

Deck Decal Assembly No. 140-0352 (continued)

Ref.	Part Number	Qty.	Description
2	130-0731	1	Decal-Danger
3	132-0872	2	Decal-Danger, Deck
4	130-0765	1	Decal-Scalp, Anti
5	117-1194	1	Decal-Routing, Belt
6	322-2	1	Screw-HH
7	104-8300	1	Nut-HF, NI

Frame Decal Assembly

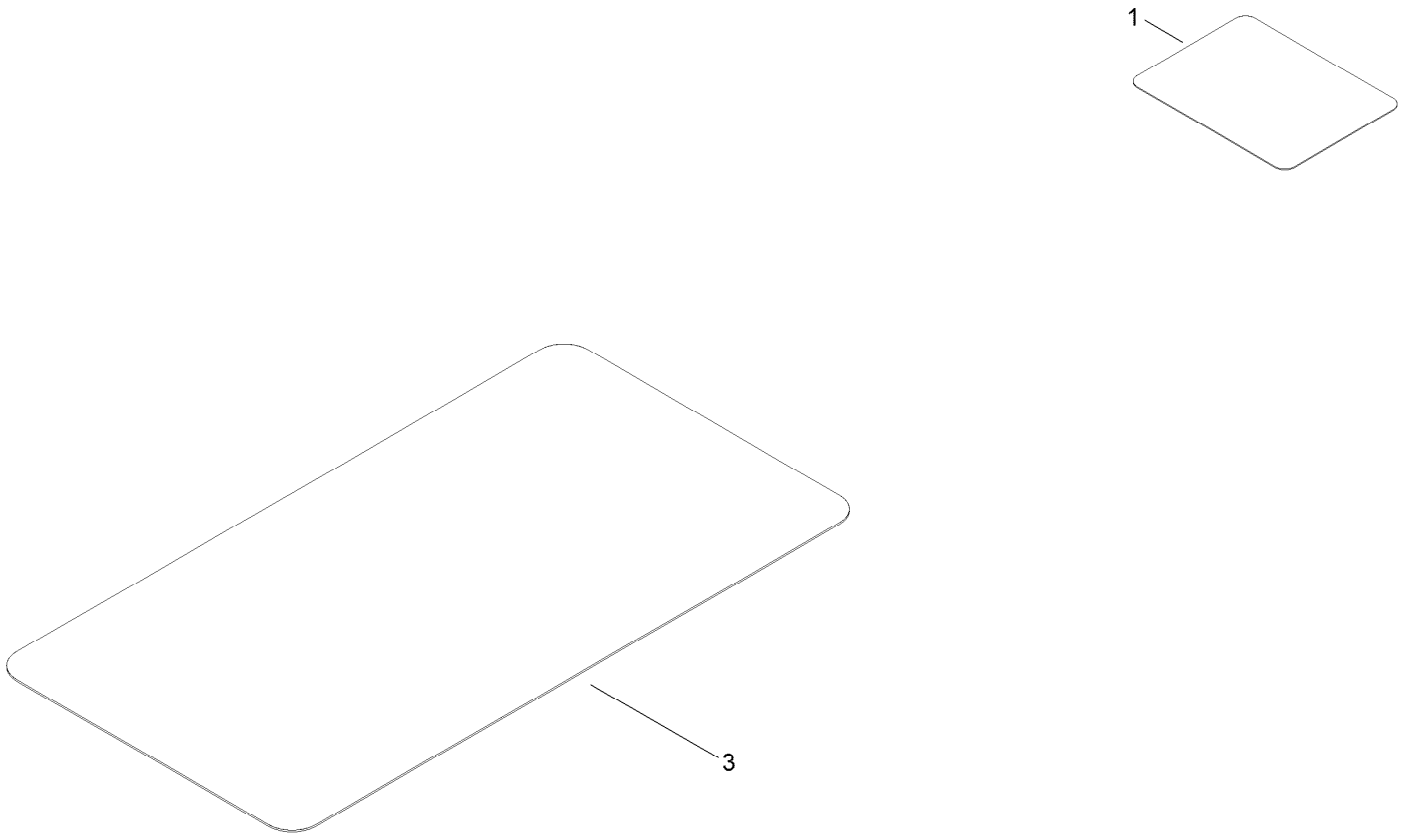

Frame Decal Assembly (continued)

Ref.	Part Number	Qty.	Description
1	136-5596	1	Decal-Maintenance
3	140-3493	1	Decal-HOC

Clutch Assembly

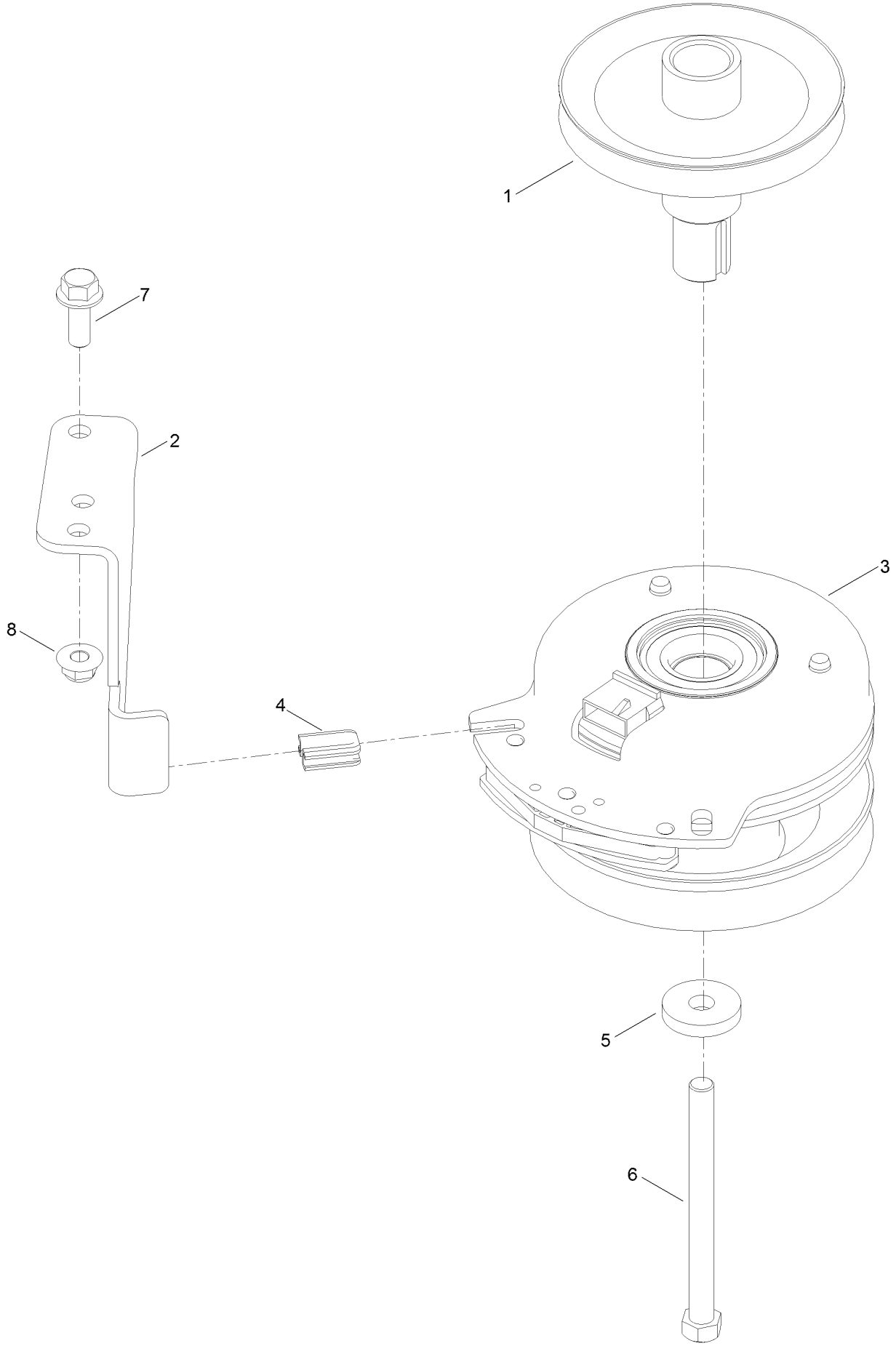

Clutch Assembly (continued)

Ref.	Part Number	Qty.	Description
1	138-9831	1	Pulley-Engine
2	137-7000	1	Stop-Clutch (Wide)
3	127-3410	1	Clutch-PTO
4	120-2217	1	Isolator-Clutch
5	139-2626	1	Washer
6	139-2573	1	Screw-HH
7	139-2597	1	Screw-HHF
8	119-4042	1	Nut-HF, NI

Attachments and Accessories

For 74875 Titan X4850 Riding Mower

Product Name	Model/Part
Powered Bagger	79346
Mount Kit	140-5125
Weight Kit	140-5084
Light Kit	136-7493
Bucket Mount Kit	140-2066
5 Gallon Bucket	133-2533
ROPS Kit	139-2638
Jack Kit	127-6666
Striping Kit 48"	140-5119
Bagging Enhancement Kit 48"	140-5121
Deck Lift Assist Kit	140-5123
Jack Mount Kit	140-5124
Product Cover	137-7012
Sunshade	137-7011
Fuel Stabilizer .05 oz	130-2393
Toro Premium Fuel Treatment 12 Oz Bottle	131-6572
4-Cycle Fuel, Snow And Lawn 32oz Can	131-3823
Toro 4-Cycle SAE 30 Oil (32oz Bottle)	38903
10w30 4-Cycle Engine Oil (32oz Bottle)	38280
CE Bagger Compliance Kit	137-5001
HD Bagger Cover Kit	140-5036
Residential Z Slope Sensor Kit	79400
Hydro Service Kit	144-5347
Flat Free Caster Wheel Kit	145-0489
Oil-30/10W-30 Synthetic (Quart)	138-6053

Notes:

TORO®

Count on it.